查询P912XDP512F0VALR供应商 捷多邦，专业PCB打样工厂，24小时加急出货

MC9S12XDP512

Data Sheet

Covers
S12XD, S12XB & S12XA Families

HCS12X
Microcontrollers

MC9S12XDP512
Rev. 2.17
July 2007

freescale.com

freescale™
semiconductor

pdf.dzsc.com

MC9S12XDP512 Data Sheet

MC9S12XDP512
Rev. 2.17
July 2007

freescale™
semiconductor

To provide the most up-to-date information, the revision of our documents on the World Wide Web will be the most current. Your printed copy may be an earlier revision. To verify you have the latest information available, refer to:

http://freescale.com/

A full list of family members and options is included in the appendices.

Read page 29 first to understand the maskset specific chapters of this document

This document contains information for all constituent modules, with the exception of the S12X CPU. For S12X CPU information please refer to the CPU S12X Reference Manual.

Revision History

Date	Revision Level	Description
April, 2005	02.07	New Book
May, 2005	02.08	Minor corrections
May, 2005	02.09	removed ESD Machine Model from electrical characteristics added thermal characteristics added more details to run current measurement configurations VDDA supply voltage range 3.15V - 3.6V fot ATD Operating Characteristics I/O Chararcteristics for alll pins except EXTAL, XTAL .... corrected VREG electrical spec IDD wait max 95mA
May 2005	02.10	Improvements to NVM reliabity spec, added part numbers
July 2005	02.11	Added ROM parts to App.
October 2005	02.12	Single Souce S12XD Fam. Document, New Memory Map Figures,
May 2006	2.13	SPI electricals updated Voltage Regulator electricals updated Added Partnumbers and 1L15Y maskset Updated App. E 6SCI's on 112 pin DT/P512 and 3 SPI's on all D256 parts
June 2006	2.14	Data Sheet covers S12XD/B & A Family Included differnt pull device specification for differnt masksets
July 2006	2.15	Minor Corrections and Improvments
June 2007	2.16	Added 2M42E and 1M84E masksets
July 2007	2.17	Modified Appendix

Freescale™ and the Freescale logo are trademarks of Freescale Semiconductor, Inc.
This product incorporates SuperFlash® technology licensed from SST.

© Freescale Semiconductor, Inc., 2005. All rights reserved.

Section Number	Title	Page

Chapter 1 Device Overview MC9S12XD-Family 31

Chapter 2 Clocks and Reset Generator (S12CRGV6) 79

Chapter 3 Pierce Oscillator (S12XOSCLCPV1) 119

Chapter 4 Analog-to-Digital Converter (ATD10B16CV4) Block Description125

Chapter 5 Analog-to-Digital Converter (S12ATD10B8CV3) 159

Chapter 6 XGATE (S12XGATEV2). 183

Chapter 7 Enhanced Capture Timer (S12ECT16B8CV2) 309

Chapter 8 Pulse-Width Modulator (S12PWM8B8CV1) 363

Chapter 9 Inter-Integrated Circuit (IICV2) Block Description. 395

Chapter 10 Freescale’s Scalable Controller Area Network (S12MSCANV3). 419

Chapter 11 Serial Communication Interface (S12SCIV5) 477

Chapter 12 Serial Peripheral Interface (S12SPIV4) 515

Chapter 13 Periodic Interrupt Timer (S12PIT24B4CV1) 541

Chapter 14 Voltage Regulator (S12VREG3V3V5) 555

Chapter 15 Background Debug Module (S12XBDMV2) 569

Chapter 16 Interrupt (S12XINTV1) 595

Chapter 17 Memory Mapping Control (S12XMMCV2) 613

Chapter 18 Memory Mapping Control (S12XMMCV3) 651

Chapter 19 Debug (S12XDBGV2) 693

Chapter 20 S12X Debug (S12XDBGV3) Module 745

Chapter 21 External Bus Interface (S12XEBIV2) 787

Chapter 22 DP512 Port Integration Module (S12XDP512PIMV2) 807

Chapter 23 DQ256 Port Integration Module (S12XDQ256PIMV2) 901

Chapter 24 DG128 Port Integration Module (S12XDG128PIMV2) 975

Section Number	Title	Page

Chapter 25 2 Kbyte EEPROM Module (S12XEETX2KV1) 1039
Chapter 26 4 Kbyte EEPROM Module (S12XEETX4KV2) 1073
Chapter 27 512 Kbyte Flash Module (S12XFTX512K4V2). 1107
Chapter 28 256 Kbyte Flash Module (S12XFTX256K2V1). 1149
Chapter 29 128 Kbyte Flash Module (S12XFTX128K1V1). 1191
Chapter 30 Security (S12X9SECV2) 1231
Appendix A Electrical Characteristics. 1239
Appendix B Package Information 1290
Appendix C Recommended PCB Layout 1294
Appendix D Using L15Y Silicon 1299
Appendix E Derivative Differences 1300
Appendix F Ordering Information 1308
Appendix G Detailed Register Map 1309

Section Number	Title	Page

Chapter 1Device Overview MC9S12XD-Family

1.1 Introduction . . . 31
1.1.1 MC9S12XD/B/A Family Features . . . 32
1.1.2 Modes of Operation . . . 34
1.1.3 Block Diagram . . . 34
1.1.4 Device Memory Map . . . 37
1.1.5 Part ID Assignments & Maskset Numbers . . . 47
1.2 Signal Description . . . 47
1.2.1 Device Pinout . . . 47
1.2.2 Signal Properties Summary . . . 52
1.2.3 Detailed Signal Descriptions . . . 55
1.2.4 Power Supply Pins . . . 65
1.3 System Clock Description . . . 68
1.4 Chip Configuration Summary . . . 69
1.5 Modes of Operation . . . 71
1.5.1 User Modes . . . 71
1.5.2 Low-Power Modes . . . 71
1.5.3 Freeze Mode . . . 72
1.6 Resets and Interrupts . . . 72
1.6.1 Vectors . . . 72
1.6.2 Effects of Reset . . . 76
1.7 COP Configuration . . . 76
1.8 ATD0 External Trigger Input Connection . . . 77
1.9 ATD1 External Trigger Input Connection . . . 77

Chapter 2
Clocks and Reset Generator (S12CRGV6)

2.1 Introduction . . . 79
2.1.1 Features . . . 79
2.1.2 Modes of Operation . . . 80
2.1.3 Block Diagram . . . 81
2.2 External Signal Description . . . 82
2.2.1 V_{DDPLL} and V_{SSPLL} — Operating and Ground Voltage Pins . . . 82
2.2.2 XFC — External Loop Filter Pin . . . 82
2.2.3 $\overline{\text{RESET}}$ — Reset Pin . . . 82
2.3 Memory Map and Register Definition . . . 82
2.3.1 Module Memory Map . . . 83
2.3.2 Register Descriptions . . . 84
2.4 Functional Description . . . 98
2.4.1 Functional Blocks . . . 98
2.4.2 Operating Modes . . . 103
2.4.3 Low Power Options . . . 104

Section Number	Title	Page

2.5 Resets . . . 113
2.5.1 Description of Reset Operation . . . 113
2.5.2 Clock Monitor Reset . . . 115
2.5.3 Computer Operating Properly Watchdog (COP) Reset . . . 115
2.5.4 Power On Reset, Low Voltage Reset . . . 115
2.6 Interrupts . . . 116
2.6.1 Real Time Interrupt . . . 116
2.6.2 PLL Lock Interrupt . . . 117
2.6.3 Self Clock Mode Interrupt . . . 117

Chapter 3
Pierce Oscillator (S12XOSCLCPV1)

3.1 Introduction . . . 119
3.1.1 Features . . . 119
3.1.2 Modes of Operation . . . 119
3.1.3 Block Diagram . . . 120
3.2 External Signal Description . . . 120
3.2.1 V_{DDPLL} and V_{SSPLL} — Operating and Ground Voltage Pins . . . 120
3.2.2 EXTAL and XTAL — Input and Output Pins . . . 120
3.2.3 XCLKS — Input Signal . . . 122
3.3 Memory Map and Register Definition . . . 122
3.4 Functional Description . . . 122
3.4.1 Gain Control . . . 122
3.4.2 Clock Monitor . . . 122
3.4.3 Wait Mode Operation . . . 123
3.4.4 Stop Mode Operation . . . 123

Chapter 4
Analog-to-Digital Converter (ATD10B16CV4)
Block Description

4.1 Introduction . . . 125
4.1.1 Features . . . 125
4.1.2 Modes of Operation . . . 125
4.1.3 Block Diagram . . . 125
4.2 External Signal Description . . . 127
4.2.1 ANx (x = 15, 14, 13, 12, 11, 10, 9, 8, 7, 6, 5, 4, 3, 2, 1, 0) — Analog Input Channel *x* Pins 127
4.2.2 ETRIG3, ETRIG2, ETRIG1, ETRIG0 — External Trigger Pins . . . 127
4.2.3 V_{RH}, V_{RL} — High Reference Voltage Pin, Low Reference Voltage Pin . . . 127
4.2.4 V_{DDA}, V_{SSA} — Analog Circuitry Power Supply Pins . . . 127
4.3 Memory Map and Register Definition . . . 127

Section Number	Title	Page

4.3.1 Module Memory Map 127
4.3.2 Register Descriptions 129
4.4 Functional Description 152
4.4.1 Analog Sub-block 152
4.4.2 Digital Sub-Block 153
4.4.3 Operation in Low Power Modes 154
4.5 Resets 155
4.6 Interrupts 155

Chapter 5Analog-to-Digital Converter (S12ATD10B8CV3)

5.1 Introduction 159
5.1.1 Features 159
5.1.2 Modes of Operation 159
5.1.3 Block Diagram 160
5.2 External Signal Description 160
5.2.1 ANx (x = 7, 6, 5, 4, 3, 2, 1, 0) — Analog Input Pin 160
5.2.2 ETRIG3, ETRIG2, ETRIG1, and ETRIG0 — External Trigger Pins 160
5.2.3 $V_{RH\ and}$ V_{RL} — High and Low Reference Voltage Pins 160
5.2.4 V_{DDA} and V_{SSA} — Power Supply Pins 160
5.3 Memory Map and Register Definition 162
5.3.1 Module Memory Map 162
5.3.2 Register Descriptions 162
5.4 Functional Description 180
5.4.1 Analog Sub-Block 180
5.4.2 Digital Sub-Block 181
5.5 Resets 182
5.6 Interrupts 182

Chapter 6
XGATE (S12XGATEV2)

6.1 Introduction 183
6.1.1 Glossary of Terms 183
6.1.2 Features 184
6.1.3 Modes of Operation 184
6.1.4 Block Diagram 185
6.2 External Signal Description 185
6.3 Memory Map and Register Definition 186
6.3.1 Register Descriptions 186
6.4 Functional Description 202
6.4.1 XGATE RISC Core 202
6.4.2 Programmer’s Model 202
6.4.3 Memory Map 203

Section Number	Title	Page

6.4.4 Semaphores . . . 204
6.4.5 Software Error Detection . . . 205
6.5 Interrupts . . . 206
6.5.1 Incoming Interrupt Requests . . . 206
6.5.2 Outgoing Interrupt Requests . . . 206
6.6 Debug Mode . . . 206
6.6.1 Debug Features . . . 206
6.6.2 Entering Debug Mode . . . 207
6.6.3 Leaving Debug Mode . . . 208
6.7 Security . . . 208
6.8 Instruction Set . . . 208
6.8.1 Addressing Modes . . . 208
6.8.2 Instruction Summary and Usage . . . 212
6.8.3 Cycle Notation . . . 215
6.8.4 Thread Execution . . . 215
6.8.5 Instruction Glossary . . . 215
6.8.6 Instruction Coding . . . 288
6.9 Initialization and Application Information . . . 291
6.9.1 Initialization . . . 291
6.9.2 Code Example (Transmit "Hello World!" on SCI) . . . 291

Chapter 7
Enhanced Capture Timer (S12ECT16B8CV2)

7.1 Introduction . . . 309
7.1.1 Features . . . 309
7.1.2 Modes of Operation . . . 309
7.1.3 Block Diagram . . . 310
7.2 External Signal Description . . . 311
7.2.1 IOC7 — Input Capture and Output Compare Channel 7 . . . 311
7.2.2 IOC6 — Input Capture and Output Compare Channel 6 . . . 311
7.2.3 IOC5 — Input Capture and Output Compare Channel 5 . . . 311
7.2.4 IOC4 — Input Capture and Output Compare Channel 4 . . . 311
7.2.5 IOC3 — Input Capture and Output Compare Channel 3 . . . 311
7.2.6 IOC2 — Input Capture and Output Compare Channel 2 . . . 311
7.2.7 IOC1 — Input Capture and Output Compare Channel 1 . . . 311
7.2.8 IOC0 — Input Capture and Output Compare Channel 0 . . . 311
7.3 Memory Map and Register Definition . . . 312
7.3.1 Module Memory Map . . . 312
7.3.2 Register Descriptions . . . 314
7.4 Functional Description . . . 350
7.4.1 Enhanced Capture Timer Modes of Operation . . . 357
7.4.2 Reset . . . 360

Section Number	Title	Page

7.4.3 Interrupts 361

Chapter 8
Pulse-Width Modulator (S12PWM8B8CV1)

8.1 Introduction 363
8.1.1 Features 363
8.1.2 Modes of Operation 363
8.1.3 Block Diagram 364
8.2 External Signal Description 364
8.2.1 PWM7 — PWM Channel 7 364
8.2.2 PWM6 — PWM Channel 6 364
8.2.3 PWM5 — PWM Channel 5 365
8.2.4 PWM4 — PWM Channel 4 365
8.2.5 PWM3 — PWM Channel 3 365
8.2.6 PWM3 — PWM Channel 2 365
8.2.7 PWM3 — PWM Channel 1 365
8.2.8 PWM3 — PWM Channel 0 365
8.3 Memory Map and Register Definition 365
8.3.1 Module Memory Map 365
8.3.2 Register Descriptions 366
8.4 Functional Description 380
8.4.1 PWM Clock Select 380
8.4.2 PWM Channel Timers 384
8.5 Resets 392
8.6 Interrupts 393

Chapter 9
Inter-Integrated Circuit (IICV2) Block Description

9.1 Introduction 395
9.1.1 Features 395
9.1.2 Modes of Operation 396
9.1.3 Block Diagram 396
9.2 External Signal Description 397
9.2.1 IIC_SCL — Serial Clock Line Pin 397
9.2.2 IIC_SDA — Serial Data Line Pin 397
9.3 Memory Map and Register Definition 397
9.3.1 Module Memory Map 397
9.3.2 Register Descriptions 398
9.4 Functional Description 409
9.4.1 I-Bus Protocol 409
9.4.2 Operation in Run Mode 412
9.4.3 Operation in Wait Mode 412

Section Number	Title	Page

9.4.4 Operation in Stop Mode 412
9.5 Resets 413
9.6 Interrupts 413
9.7 Initialization/Application Information 413
9.7.1 IIC Programming Examples 413

Chapter 10
Freescale's Scalable Controller Area Network (S12MSCANV3)

10.1 Introduction 419
10.1.1 Glossary 419
10.1.2 Block Diagram 420
10.1.3 Features 420
10.1.4 Modes of Operation 421
10.2 External Signal Description 421
10.2.1 RXCAN — CAN Receiver Input Pin 421
10.2.2 TXCAN — CAN Transmitter Output Pin 421
10.2.3 CAN System 421
10.3 Memory Map and Register Definition 422
10.3.1 Module Memory Map 422
10.3.2 Register Descriptions 424
10.3.3 Programmer's Model of Message Storage 445
10.4 Functional Description 456
10.4.1 General 456
10.4.2 Message Storage 457
10.4.3 Identifier Acceptance Filter 460
10.4.4 Modes of Operation 466
10.4.5 Low-Power Options 467
10.4.6 Reset Initialization 472
10.4.7 Interrupts 472
10.5 Initialization/Application Information 474
10.5.1 MSCAN initialization 474
10.5.2 Bus-Off Recovery 474

Chapter 11
Serial Communication Interface (S12SCIV5)

11.1 Introduction 477
11.1.1 Glossary 477
11.1.2 Features 477
11.1.3 Modes of Operation 478
11.1.4 Block Diagram 478
11.2 External Signal Description 480
11.2.1 TXD — Transmit Pin 480

Section Number	Title	Page

11.2.2 RXD — Receive Pin 480
11.3 Memory Map and Register Definition 480
11.3.1 Module Memory Map and Register Definition 480
11.3.2 Register Descriptions 481
11.4 Functional Description 493
11.4.1 Infrared Interface Submodule 494
11.4.2 LIN Support 494
11.4.3 Data Format 495
11.4.4 Baud Rate Generation 496
11.4.5 Transmitter 497
11.4.6 Receiver 502
11.4.7 Single-Wire Operation 510
11.4.8 Loop Operation 511
11.5 Initialization/Application Information 511
11.5.1 Reset Initialization 511
11.5.2 Modes of Operation 511
11.5.3 Interrupt Operation 512
11.5.4 Recovery from Wait Mode 514
11.5.5 Recovery from Stop Mode 514

Chapter 12
Serial Peripheral Interface (S12SPIV4)

12.1 Introduction 515
12.1.1 Glossary of Terms 515
12.1.2 Features 515
12.1.3 Modes of Operation 515
12.1.4 Block Diagram 516
12.2 External Signal Description 517
12.2.1 MOSI — Master Out/Slave In Pin 517
12.2.2 MISO — Master In/Slave Out Pin 517
12.2.3 $\overline{SS}$ — Slave Select Pin 518
12.2.4 SCK — Serial Clock Pin 518
12.3 Memory Map and Register Definition 518
12.3.1 Module Memory Map 518
12.3.2 Register Descriptions 519
12.4 Functional Description 528
12.4.1 Master Mode 529
12.4.2 Slave Mode 530
12.4.3 Transmission Formats 531
12.4.4 SPI Baud Rate Generation 535
12.4.5 Special Features 535
12.4.6 Error Conditions 537

Section Number	Title	Page

12.4.7 Low Power Mode Options 537

Chapter 13
Periodic Interrupt Timer (S12PIT24B4CV1)

13.1 Introduction 541
13.1.1 Glossary 541
13.1.2 Features 541
13.1.3 Modes of Operation 541
13.1.4 Block Diagram 542
13.2 External Signal Description 542
13.3 Memory Map and Register Definition 543
13.4 Functional Description 551
13.4.1 Timer 551
13.4.2 Interrupt Interface 552
13.4.3 Hardware Trigger 553
13.5 Initialization/Application Information 553
13.5.1 Startup 553
13.5.2 Shutdown 553
13.5.3 Flag Clearing 553

Chapter 14
Voltage Regulator (S12VREG3V3V5)

14.1 Introduction 555
14.1.1 Features 555
14.1.2 Modes of Operation 555
14.1.3 Block Diagram 556
14.2 External Signal Description 557
14.2.1 VDDR — Regulator Power Input Pins 557
14.2.2 VDDA, VSSA — Regulator Reference Supply Pins 557
14.2.3 VDD, VSS — Regulator Output1 (Core Logic) Pins 557
14.2.4 VDDPLL, VSSPLL — Regulator Output2 (PLL) Pins 558
14.2.5 V_{REGEN} — Optional Regulator Enable Pin 558
14.3 Memory Map and Register Definition 558
14.3.1 Module Memory Map 558
14.3.2 Register Descriptions 559
14.4 Functional Description 564
14.4.1 General 564
14.4.2 Regulator Core (REG) 564
14.4.3 Low-Voltage Detect (LVD) 565
14.4.4 Power-On Reset (POR) 565
14.4.5 Low-Voltage Reset (LVR) 565
14.4.6 Regulator Control (CTRL) 565

Section Number	Title	Page

14.4.7 Autonomous Periodical Interrupt (API) 565
14.4.8 Resets 566
14.4.9 Description of Reset Operation 566
14.4.10 Interrupts 566

Chapter 15
Background Debug Module (S12XBDMV2)

15.1 Introduction 569
15.1.1 Features 569
15.1.2 Modes of Operation 570
15.1.3 Block Diagram 571
15.2 External Signal Description 572
15.3 Memory Map and Register Definition 572
15.3.1 Module Memory Map 572
15.3.2 Register Descriptions 573
15.3.3 Family ID Assignment 577
15.4 Functional Description 578
15.4.1 Security 578
15.4.2 Enabling and Activating BDM 578
15.4.3 BDM Hardware Commands 579
15.4.4 Standard BDM Firmware Commands 580
15.4.5 BDM Command Structure 582
15.4.6 BDM Serial Interface 584
15.4.7 Serial Interface Hardware Handshake Protocol 586
15.4.8 Hardware Handshake Abort Procedure 588
15.4.9 SYNC — Request Timed Reference Pulse 591
15.4.10 Instruction Tracing 592
15.4.11 Serial Communication Time Out 593

Chapter 16
Interrupt (S12XINTV1)

16.1 Introduction 595
16.1.1 Glossary 596
16.1.2 Features 596
16.1.3 Modes of Operation 596
16.1.4 Block Diagram 598
16.2 External Signal Description 599
16.3 Memory Map and Register Definition 599
16.3.1 Register Descriptions 600
16.4 Functional Description 607
16.4.1 S12X Exception Requests 607
16.4.2 Interrupt Prioritization 607

Section Number	Title	Page

16.4.3 XGATE Requests . . . 608
16.4.4 Priority Decoders . . . 608
16.4.5 Reset Exception Requests . . . 609
16.4.6 Exception Priority . . . 609
16.5 Initialization/Application Information . . . 610
16.5.1 Initialization . . . 610
16.5.2 Interrupt Nesting . . . 610
16.5.3 Wake Up from Stop or Wait Mode . . . 611

Chapter 17
Memory Mapping Control (S12XMMCV2)

17.1 Introduction . . . 613
17.1.1 Features . . . 613
17.1.2 Modes of Operation . . . 613
17.1.3 Block Diagram . . . 614
17.2 External Signal Description . . . 614
17.3 Memory Map and Registers . . . 616
17.3.1 Module Memory Map . . . 616
17.3.2 Register Descriptions . . . 617
17.4 Functional Description . . . 630
17.4.1 MCU Operating Mode . . . 630
17.4.2 Memory Map Scheme . . . 631
17.4.3 Chip Access Restrictions . . . 640
17.4.4 Chip Bus Control . . . 642
17.4.5 Interrupts . . . 643
17.5 Initialization/Application Information . . . 643
17.5.1 CALL and RTC Instructions . . . 643
17.5.2 Port Replacement Registers (PRRs) . . . 644
17.5.3 On-Chip ROM Control . . . 646

Chapter 18
Memory Mapping Control (S12XMMCV3)

18.1 Introduction . . . 651
18.1.1 Terminology . . . 652
18.1.2 Features . . . 652
18.1.3 S12X Memory Mapping . . . 653
18.1.4 Modes of Operation . . . 653
18.1.5 Block Diagram . . . 654
18.2 External Signal Description . . . 654
18.3 Memory Map and Registers . . . 656
18.3.1 Module Memory Map . . . 656
18.3.2 Register Descriptions . . . 657

Section Number	Title	Page

18.4 Functional Description 671
18.4.1 MCU Operating Mode 671
18.4.2 Memory Map Scheme 672
18.4.3 Chip Access Restrictions 681
18.4.4 Chip Bus Control 683
18.4.5 Interrupts 684
18.5 Initialization/Application Information 684
18.5.1 CALL and RTC Instructions 684
18.5.2 Port Replacement Registers (PRRs) 685
18.5.3 On-Chip ROM Control 687

Chapter 19
Debug (S12XDBGV2)

19.1 Introduction 693
19.1.1 Glossary of Terms 693
19.1.2 Features 694
19.1.3 Modes of Operation 694
19.1.4 Block Diagram 695
19.2 External Signal Description 695
19.3 Memory Map and Register Definition 697
19.3.1 Register Descriptions 697
19.4 Functional Description 714
19.4.1 DBG Operation 714
19.4.2 Comparator Modes 715
19.4.3 Trigger Modes 718
19.4.4 State Sequence Control 720
19.4.5 Trace Buffer Operation 721
19.4.6 Tagging 728
19.4.7 Breakpoints 729

Chapter 20
S12X Debug (S12XDBGV3) Module

20.1 Introduction 745
20.1.1 Glossary Of Terms 745
20.1.2 Overview 745
20.1.3 Features 746
20.1.4 Modes of Operation 746
20.1.5 Block Diagram 747
20.2 External Signal Description 747
20.3 Memory Map and Registers 748
20.3.1 Module Memory Map 748
20.3.2 Register Descriptions 749

Section Number	Title	Page

20.4 Functional Description 768
20.4.1 S12XDBG Operation 768
20.4.2 Comparator Modes 769
20.4.3 Trigger Modes 772
20.4.4 State Sequence Control 774
20.4.5 Trace Buffer Operation 775
20.4.6 Tagging 782
20.4.7 Breakpoints 783

Chapter 21
External Bus Interface (S12XEBIV2)

21.1 Introduction 787
21.1.1 Features 787
21.1.2 Modes of Operation 787
21.1.3 Block Diagram 788
21.2 External Signal Description 788
21.3 Memory Map and Register Definition 790
21.3.1 Module Memory Map 790
21.3.2 Register Descriptions 790
21.4 Functional Description 794
21.4.1 Operating Modes and External Bus Properties 794
21.4.2 Internal Visibility 795
21.4.3 Accesses to Port Replacement Registers 798
21.4.4 Stretched External Bus Accesses 798
21.4.5 Data Select and Data Direction Signals 799
21.4.6 Low-Power Options 801
21.5 Initialization/Application Information 801
21.5.1 Normal Expanded Mode 802
21.5.2 Emulation Modes 803

Chapter 22
DP512 Port Integration Module (S12XDP512PIMV2)

22.1 Introduction 807
22.1.1 Features 808
22.1.2 Block Diagram 808
22.2 External Signal Description 810
22.2.1 Signal Properties 810
22.3 Memory Map and Register Definition 817
22.3.1 Module Memory Map 817
22.3.2 Register Descriptions 820
22.4 Functional Description 881
22.4.1 Registers 881

Section Number	Title	Page

22.4.2 Ports 883
22.4.3 Pin Interrupts 887
22.4.4 Expanded Bus Pin Functions 888
22.4.5 Low-Power Options 889
22.5 Initialization and Application Information 889

Chapter 23
DQ256 Port Integration Module (S12XDQ256PIMV2)

Chapter 23Introduction 901
23.0.1 Features 901
23.0.2 Block Diagram 902
Figure 23-1.External Signal Description 904
23.0.3 Signal Properties 904
Table 23-1.Memory Map and Register Definition 910
23.0.4 Module Memory Map 910
23.0.5 Register Descriptions 913
Table 23-66.Functional Description 962
23.0.6 Registers 963
23.0.7 Ports 965
23.0.8 Pin Interrupts 968
23.0.9 Expanded Bus Pin Functions 969
23.0.10Low-Power Options 971
23.0.10.3Initialization and Application Information 971

Chapter 24
DG128 Port Integration Module (S12XDG128PIMV2)

Chapter 24Introduction 975
24.0.1 Features 975
24.0.2 Block Diagram 976
Figure 24-1.External Signal Description 978
24.0.3 Signal Properties 978
Table 24-1.Memory Map and Register Definition 983
24.0.4 Module Memory Map 983
24.0.5 Register Descriptions 985
Table 24-59.Functional Description 1028
24.0.6 Registers 1029
24.0.7 Ports 1031
24.0.8 Pin Interrupts 1033
24.0.9 Low-Power Options 1034
24.0.9.3Initialization and Application Information 1035

Section Number	Title	Page

Chapter 25
2 Kbyte EEPROM Module (S12XEETX2KV1)

25.1 Introduction . . . 1039
25.1.1 Glossary . . . 1039
25.1.2 Features . . . 1039
25.1.3 Modes of Operation . . . 1039
25.1.4 Block Diagram . . . 1040
25.2 External Signal Description . . . 1040
25.3 Memory Map and Register Definition . . . 1040
25.3.1 Module Memory Map . . . 1040
25.3.2 Register Descriptions . . . 1043
25.4 Functional Description . . . 1051
25.4.1 EEPROM Command Operations . . . 1051
25.4.2 EEPROM Commands . . . 1054
25.4.3 Illegal EEPROM Operations . . . 1068
25.5 Operating Modes . . . 1069
25.5.1 Wait Mode . . . 1069
25.5.2 Stop Mode . . . 1069
25.5.3 Background Debug Mode . . . 1069
25.6 EEPROM Module Security . . . 1069
25.6.1 Unsecuring the MCU in Special Single Chip Mode using BDM . . . 1070
25.7 Resets . . . 1070
25.7.1 EEPROM Reset Sequence . . . 1070
25.7.2 Reset While EEPROM Command Active . . . 1070
25.8 Interrupts . . . 1070
25.8.1 Description of EEPROM Interrupt Operation . . . 1071

Chapter 26
4 Kbyte EEPROM Module (S12XEETX4KV2)

26.1 Introduction . . . 1073
26.1.1 Glossary . . . 1073
26.1.2 Features . . . 1073
26.1.3 Modes of Operation . . . 1073
26.1.4 Block Diagram . . . 1074
26.2 External Signal Description . . . 1074
26.3 Memory Map and Register Definition . . . 1074
26.3.1 Module Memory Map . . . 1074
26.3.2 Register Descriptions . . . 1078
26.4 Functional Description . . . 1086
26.4.1 EEPROM Command Operations . . . 1086
26.4.2 EEPROM Commands . . . 1089
26.4.3 Illegal EEPROM Operations . . . 1103

Section Number	Title	Page

26.5 Operating Modes 1104
26.5.1 Wait Mode 1104
26.5.2 Stop Mode 1104
26.5.3 Background Debug Mode 1104
26.6 EEPROM Module Security 1104
26.6.1 Unsecuring the MCU in Special Single Chip Mode using BDM 1105
26.7 Resets 1105
26.7.1 EEPROM Reset Sequence 1105
26.7.2 Reset While EEPROM Command Active 1105
26.8 Interrupts 1105
26.8.1 Description of EEPROM Interrupt Operation 1106

Chapter 27
512 Kbyte Flash Module (S12XFTX512K4V2)

27.1 Introduction 1107
27.1.1 Glossary 1107
27.1.2 Features 1107
27.1.3 Modes of Operation 1108
27.1.4 Block Diagram 1108
27.2 External Signal Description 1109
27.3 Memory Map and Register Definition 1110
27.3.1 Module Memory Map 1110
27.3.2 Register Descriptions 1113
27.4 Functional Description 1126
27.4.1 Flash Command Operations 1126
27.4.2 Flash Commands 1129
27.4.3 Illegal Flash Operations 1144
27.5 Operating Modes 1145
27.5.1 Wait Mode 1145
27.5.2 Stop Mode 1145
27.5.3 Background Debug Mode 1145
27.6 Flash Module Security 1145
27.6.1 Unsecuring the MCU using Backdoor Key Access 1146
27.6.2 Unsecuring the MCU in Special Single Chip Mode using BDM 1147
27.7 Resets 1147
27.7.1 Flash Reset Sequence 1147
27.7.2 Reset While Flash Command Active 1147
27.8 Interrupts 1147
27.8.1 Description of Flash Interrupt Operation 1148

Section Number	Title	Page

Chapter 28
256 Kbyte Flash Module (S12XFTX256K2V1)

28.1 Introduction . . . 1149
28.1.1 Glossary . . . 1149
28.1.2 Features . . . 1149
28.1.3 Modes of Operation . . . 1150
28.1.4 Block Diagram . . . 1150
28.2 External Signal Description . . . 1150
28.3 Memory Map and Register Definition . . . 1151
28.3.1 Module Memory Map . . . 1151
28.3.2 Register Descriptions . . . 1153
28.4 Functional Description . . . 1166
28.4.1 Flash Command Operations . . . 1166
28.4.2 Flash Commands . . . 1169
28.4.3 Illegal Flash Operations . . . 1185
28.5 Operating Modes . . . 1186
28.5.1 Wait Mode . . . 1186
28.5.2 Stop Mode . . . 1186
28.5.3 Background Debug Mode . . . 1186
28.6 Flash Module Security . . . 1186
28.6.1 Unsecuring the MCU using Backdoor Key Access . . . 1187
28.6.2 Unsecuring the MCU in Special Single Chip Mode using BDM . . . 1188
28.7 Resets . . . 1188
28.7.1 Flash Reset Sequence . . . 1188
28.7.2 Reset While Flash Command Active . . . 1188
28.8 Interrupts . . . 1188
28.8.1 Description of Flash Interrupt Operation . . . 1189

Chapter 29
128 Kbyte Flash Module (S12XFTX128K1V1)

29.1 Introduction . . . 1191
29.1.1 Glossary . . . 1191
29.1.2 Features . . . 1191
29.1.3 Modes of Operation . . . 1192
29.1.4 Block Diagram . . . 1192
29.2 External Signal Description . . . 1192
29.3 Memory Map and Register Definition . . . 1193
29.3.1 Module Memory Map . . . 1193
29.3.2 Register Descriptions . . . 1195
29.4 Functional Description . . . 1208
29.4.1 Flash Command Operations . . . 1208
29.4.2 Flash Commands . . . 1211

Section Number	Title	Page

29.4.3 Illegal Flash Operations 1226
29.5 Operating Modes 1227
29.5.1 Wait Mode 1227
29.5.2 Stop Mode 1227
29.5.3 Background Debug Mode 1227
29.6 Flash Module Security 1227
29.6.1 Unsecuring the MCU using Backdoor Key Access 1227
29.6.2 Unsecuring the MCU in Special Single Chip Mode using BDM 1229
29.7 Resets 1229
29.7.1 Flash Reset Sequence 1229
29.7.2 Reset While Flash Command Active 1229
29.8 Interrupts 1229
29.8.1 Description of Flash Interrupt Operation 1230

Chapter 30
Security (S12X9SECV2)

30.1 Introduction 1231
30.1.1 Features 1231
30.1.2 Modes of Operation 1232
30.1.3 Securing the Microcontroller 1232
30.1.4 Operation of the Secured Microcontroller 1233
30.1.5 Unsecuring the Microcontroller 1235
30.1.6 Reprogramming the Security Bits 1236
30.1.7 Complete Memory Erase (Special Modes) 1236

Appendix A
Electrical Characteristics

A.1 General 1239
A.1.1 Parameter Classification 1239
A.1.2 Power Supply 1239
A.1.3 Pins 1240
A.1.4 Current Injection 1240
A.1.5 Absolute Maximum Ratings 1241
A.1.6 ESD Protection and Latch-up Immunity. 1241
A.1.7 Operating Conditions 1243
A.1.8 Power Dissipation and Thermal Characteristics 1244
A.1.9 I/O Characteristics 1246
A.1.10 Supply Currents 1249
A.2 ATD Characteristics 1253
A.2.1 ATD Operating Characteristics. 1253
A.2.2 Factors Influencing Accuracy 1254
A.2.3 ATD Accuracy 1256

Section Number	Title	Page

A.3 NVM, Flash, and EEPROM . . . 1259
A.3.1 NVM Timing . . . 1259
A.3.2 NVM Reliability . . . 1262
A.4 Voltage Regulator . . . 1264
A.4.1 Chip Power-up and Voltage Drops . . . 1265
A.4.2 Output Loads . . . 1265
A.5 Reset, Oscillator, and PLL . . . 1267
A.5.1 Startup . . . 1267
A.5.2 Oscillator . . . 1268
A.5.3 Phase Locked Loop . . . 1270
A.6 MSCAN . . . 1273
A.7 SPI Timing . . . 1274
A.7.1 Master Mode . . . 1274
A.7.2 Slave Mode . . . 1276
A.8 External Bus Timing . . . 1279
A.8.1 Normal Expanded Mode (External Wait Feature Disabled) . . . 1279
A.8.2 Normal Expanded Mode (External Wait Feature Enabled) . . . 1281
A.8.3 Emulation Single-Chip Mode (Without Wait States) . . . 1284
A.8.4 Emulation Expanded Mode (With Optional Access Stretching) . . . 1286
A.8.5 External Tag Trigger Timing . . . 1289

Appendix B
Package Information

B.1 144-Pin LQFP . . . 1291
B.2 112-Pin LQFP Package . . . 1292
B.3 80-Pin QFP Package . . . 1293

Appendix C
Recommended PCB Layout

Appendix D
Using L15Y Silicon

Appendix E
Derivative Differences

E.1 Memory Sizes and Package Options S12XD - Family . . . 1300
E.2 Memory Sizes and Package Options S12XA & S12XB Family . . . 1302
E.3 MC9S12XD-Family Flash Configuration . . . 1303
E.4 MC9S12XD/A/B -Family SRAM & EEPROM Configuration . . . 1304
E.5 Peripheral Sets S12XD - Family . . . 1305
E.6 Peripheral Sets S12XA & S12XB - Family . . . 1306

Section Number	Title	Page

E.7 Pinout explanations: 1307

Appendix F
Ordering Information

Appendix G
Detailed Register Map

Section Number	Title	Page

NOTE

This documentation covers all devices in the S12XD, S12XB and S12XA families. A full list of these devices and their features can be found in the following chapters:

- E.1 Memory Sizes and Package Options S12XD - Family
- E.2 Memory Sizes and Package Options S12XA & S12XB Family
- E.5 Peripheral Sets S12XD - Family
- E.6 Peripheral Sets S12XA & S12XB - Family
- Table 1-6 Partnames, Masksets and assigned PartID's

This document includes different sections for S12XDPIM, S1XMMC, S12XDBG, S12XEETX and S12XFTX because the different masksets of the S12XD, S12XB and S12XA families include differnt configurations or versions of the modules or have different memory sizes. Table 0-1 shows the maskset specific chapters in this documentation.

Table 0-1. Maskset Specific Documentation

Chapters in this Documentation	L15Y (512k Flash)	M84E (256K Flash)	M42E (128K Flash)
Chapter 21 External Bus Interface (S12XEBIV2) 787	✓	✓	
Chapter 17 Memory Mapping Control (S12XMMCV2) 613	✓		
Chapter 18 Memory Mapping Control (S12XMMCV3) 649		✓	✓
Chapter 19 Debug (S12XDBGV2) 691	✓		
Chapter 20 S12X Debug (S12XDBGV3) Module 743		✓	✓
Chapter 22 DP512 Port Integration Module (S12XDP512PIMV2) 805	✓		
Chapter 23 DQ256 Port Integration Module (S12XDQ256PIMV2) 899		✓	
Chapter 24 DG128 Port Integration Module (S12XDG128PIMV2) 973			✓
Chapter 25 2 Kbyte EEPROM Module (S12XEETX2KV1) 1037			✓
Chapter 26 4 Kbyte EEPROM Module (S12XEETX4KV2) 1071	✓	✓	
Chapter 27 512 Kbyte Flash Module (S12XFTX512K4V2) 1105	✓		
Chapter 28 256 Kbyte Flash Module (S12XFTX256K2V1) 1147		✓	
Chapter 29 128 Kbyte Flash Module (S12XFTX128K1V1) 1189			✓
Chapter 5 Analog-to-Digital Converter (S12ATD10B8CV3) 157	✓	✓	

Chapter 1 Device Overview MC9S12XD-Family describes pinouts, detailed pin description , interrupts and register map of the cover part MC9S12XDP512 (maskset L15Y). For availability of the modules on other members of the S12XA, S12XB and S12XD families please refer to Appendix E Derivative Differences. For pinout explanations of the different parts refer to E.7 Pinout explanations:. For a list of available partnames /masksets refer to Table 1-6.

Chapter 1 Device Overview MC9S12XD-Family

1.1 Introduction

The MC9S12XD family will retain the low cost, power consumption, EMC and code-size efficiency advantages currently enjoyed by users of Freescale's existing 16-Bit MC9S12 MCU Family.

Based around an enhanced S12 core, the MC9S12XD family will deliver 2 to 5 times the performance of a 25-MHz S12 whilst retaining a high degree of pin and code compatibility with the S12.

The MC9S12XD family introduces the performance boosting XGATE module. Using enhanced DMA functionality, this parallel processing module offloads the CPU by providing high-speed data processing and transfer between peripheral modules, RAM, Flash EEPROM and I/O ports. Providing up to 80 MIPS of performance additional to the CPU, the XGATE can access all peripherals, Flash EEPROM and the RAM block.

The MC9S12XD family is composed of standard on-chip peripherals including up to 512 Kbytes of Flash EEPROM, 32 Kbytes of RAM, 4 Kbytes of EEPROM, six asynchronous serial communications interfaces (SCI), three serial peripheral interfaces (SPI), an 8-channel IC/OC enhanced capture timer, an 8-channel, 10-bit analog-to-digital converter, a 16-channel, 10-bit analog-to-digital converter, an 8-channel pulse-width modulator (PWM), five CAN 2.0 A, B software compatible modules (MSCAN12), two inter-IC bus blocks, and a periodic interrupt timer. The MC9S12XD family has full 16-bit data paths throughout.

The non-multiplexed expanded bus interface available on the 144-pin versions allows an easy interface to external memories

The inclusion of a PLL circuit allows power consumption and performance to be adjusted to suit operational requirements. System power consumption can be further improved with the new “fast exit from stop mode” feature.

In addition to the I/O ports available in each module, up to 25 further I/O ports are available with interrupt capability allowing wake-up from stop or wait mode.

Family members in 144-pin LQFP will be available with external bus interface and parts in 112-pin LQFP or 80-pin QFP package without external bus interface. See Appendix E Derivative Differences for package optioÔÛÆ@»

1.1.1 MC9S12XD/B/A Family Features

This section lists the features which are available on MC9S12XDP512. See Appendix E Derivative Differences for availability of features and memory sizes on other family members.

- HCS12X Core
  - 16-bit HCS12X CPU
    - Upward compatible with MC9S12 instruction set
    - Interrupt stacking and programmer's model identical to MC9S12
    - Instruction queue
    - Enhanced indexed addressing
    - Enhanced instruction set
  - EBI (external bus interface)
  - MMC (module mapping control)
  - INT (interrupt controller)
  - DBG (debug module to monitor HCS12X CPU and XGATE bus activity)
  - BDM (background debug mode)
- XGATE (peripheral coprocessor)
  - Parallel processing module off loads the CPU by providing high-speed data processing and transfer
  - Data transfer between Flash EEPROM, RAM, peripheral modules, and I/O ports
- PIT (periodic interrupt timer)
  - Four timers with independent time-out periods
  - Time-out periods selectable between 1 and 2^{24} bus clock cycles
- CRG (clock and reset generator)
  - Low noise/low power Pierce oscillator
  - PLL
  - COP watchdog
  - Real time interrupt
  - Clock monitor
  - Fast wake-up from stop mode
- Port H & Port J with interrupt functionality
  - Digital filtering
  - Programmable rising or falling edge trigger
- Memory
  - 512, 256 and 128-Kbyte Flash EEPROM
  - 4 and 2-Kbyte EEPROM
  - 32, 16 and 12-Kbyte RAM
- One 16-channel and one 8-channel ADC (analog-to-digital converter)

  - 10-bit resolution
  - External and internal conversion trigger capabilityFiveFourTwo 1M bit per second, CAN 2.0 A, B software compatible modules
  - Five receive and three transmit buffers
  - Flexible identifier filter programmable as 2 x 32 bit, 4 x 16 bit, or 8 x 8 bit
  - Four separate interrupt channels for Rx, Tx, error, and wake-up
  - Low-pass filter wake-up function
  - Loop-back for self-test operation
- ECT (enhanced capture timer)
  - 16-bit main counter with 7-bit prescaler
  - 8 programmable input capture or output compare channels
  - Four 8-bit or two 16-bit pulse accumulators
- 8 PWM (pulse-width modulator) channels
  - Programmable period and duty cycle
  - 8-bit 8-channel or 16-bit 4-channel
  - Separate control for each pulse width and duty cycle
  - Center-aligned or left-aligned outputs
  - Programmable clock select logic with a wide range of frequencies
  - Fast emergency shutdown input
- Serial interfaces
  - SixFourTwo asynchronous serial communication interfaces (SCI) with additional LIN support and selectable IrDA 1.4 return-to-zero-inverted (RZI) format with programmable pulse width
  - ThreeTwo Synchronous Serial Peripheral Interfaces (SPI)
- TwoOne IIC (Inter-IC bus) Modules
  - Compatible with IIC bus standard
  - Multi-master operation
  - Software programmable for one of 256 different serial clock frequencies
- On-Chip Voltage Regulator
  - Two parallel, linear voltage regulators with bandgap reference
  - Low-voltage detect (LVD) with low-voltage interrupt (LVI)
  - Power-on reset (POR) circuit
  - 3.3-V–5.5-V operation
  - Low-voltage reset (LVR)
  - Ultra low-power wake-up timer
- 144-pin LQFP, 112-pin LQFP, and 80-pin QFP packages
  - I/O lines with 5-V input and drive capability
  - Input threshold on external bus interface inputs switchable for 3.3-V or 5-V operation
  - 5-V A/D converter inputs
  - Operation at 80 MHz equivalent to 40-MHz bus speed

- Development support
  - Single-wire background debug™ mode (BDM)
  - Four on-chip hardware breakpoints

1.1.2 Modes of Operation

Normal expanded mode, Emulation of single-chip mode and Emulation of expanded mode are ony available on family members with an external bus interface in 144-pin LQFP. See Appendix E Derivative Differences for package options.

User modes:

- Normal and emulation operating modes
  - Normal single-chip mode
  - Normal expanded mode
  - Emulation of single-chip mode
  - Emulation of expanded mode
- Special Operating Modes
  - Special single-chip mode with active background debug mode
  - Special test mode (**Freescale use only**)

Low-power modes:

- System stop modes
  - Pseudo stop mode
  - Full stop mode
- System wait mode

1.1.3 Block Diagram

Figure 1-1 shows a block diagram of theMC9S12X-Family. The block diagram shows all modules available on cover part MC9S12XDP512. Availability of modules on other family members see Appendix E Derivative Differences. Figure 1-2 shows blocks integrated on maskset M42E. The 16 channel ATD Converter is routed to pins PAD00 - PAD15 on maskset M42E. See Chapter 4 Analog-to-Digital Converter (ATD10B16CV4) Block Description 123.

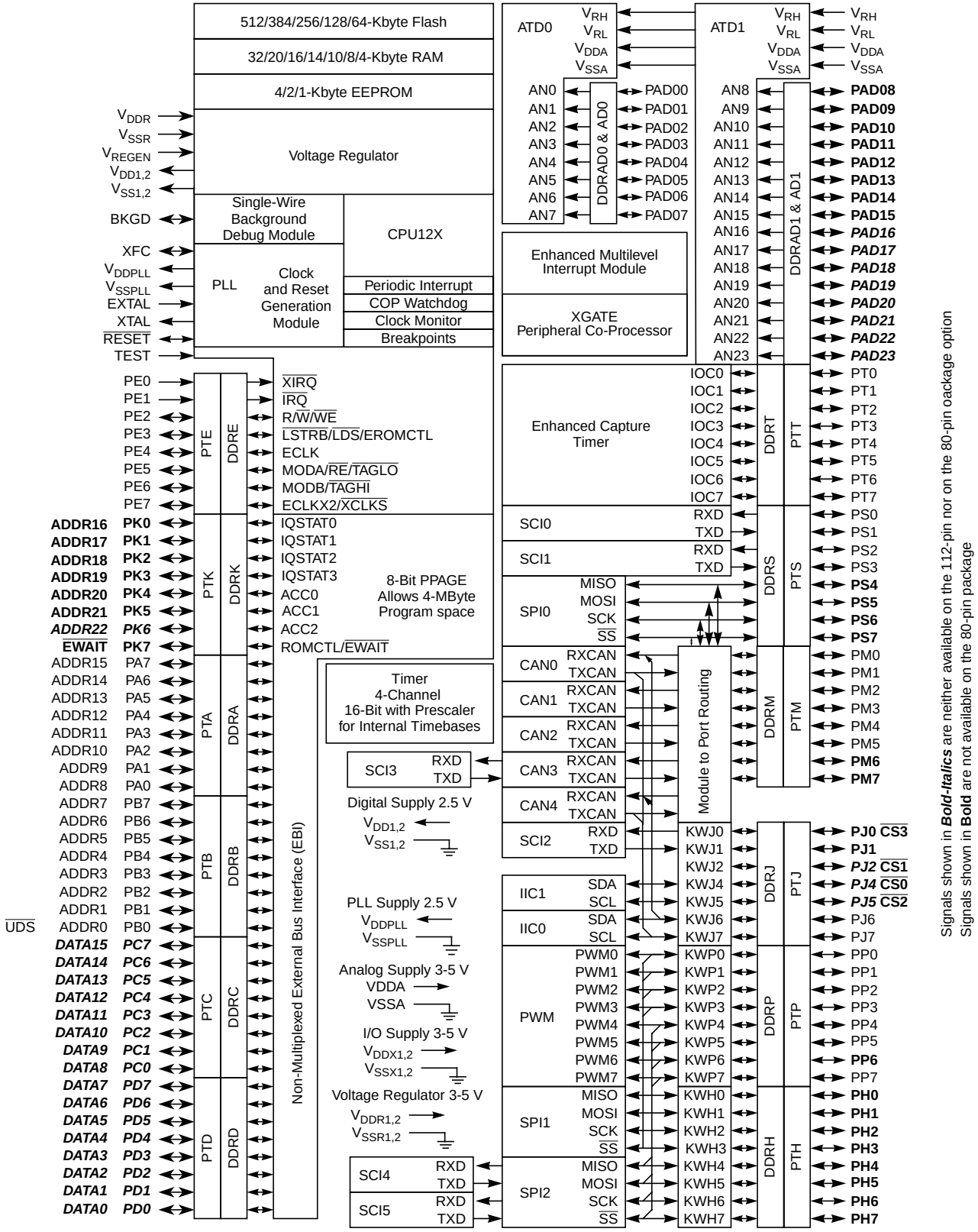

Figure 1-1. MC9S12XD-Family Block Diagram

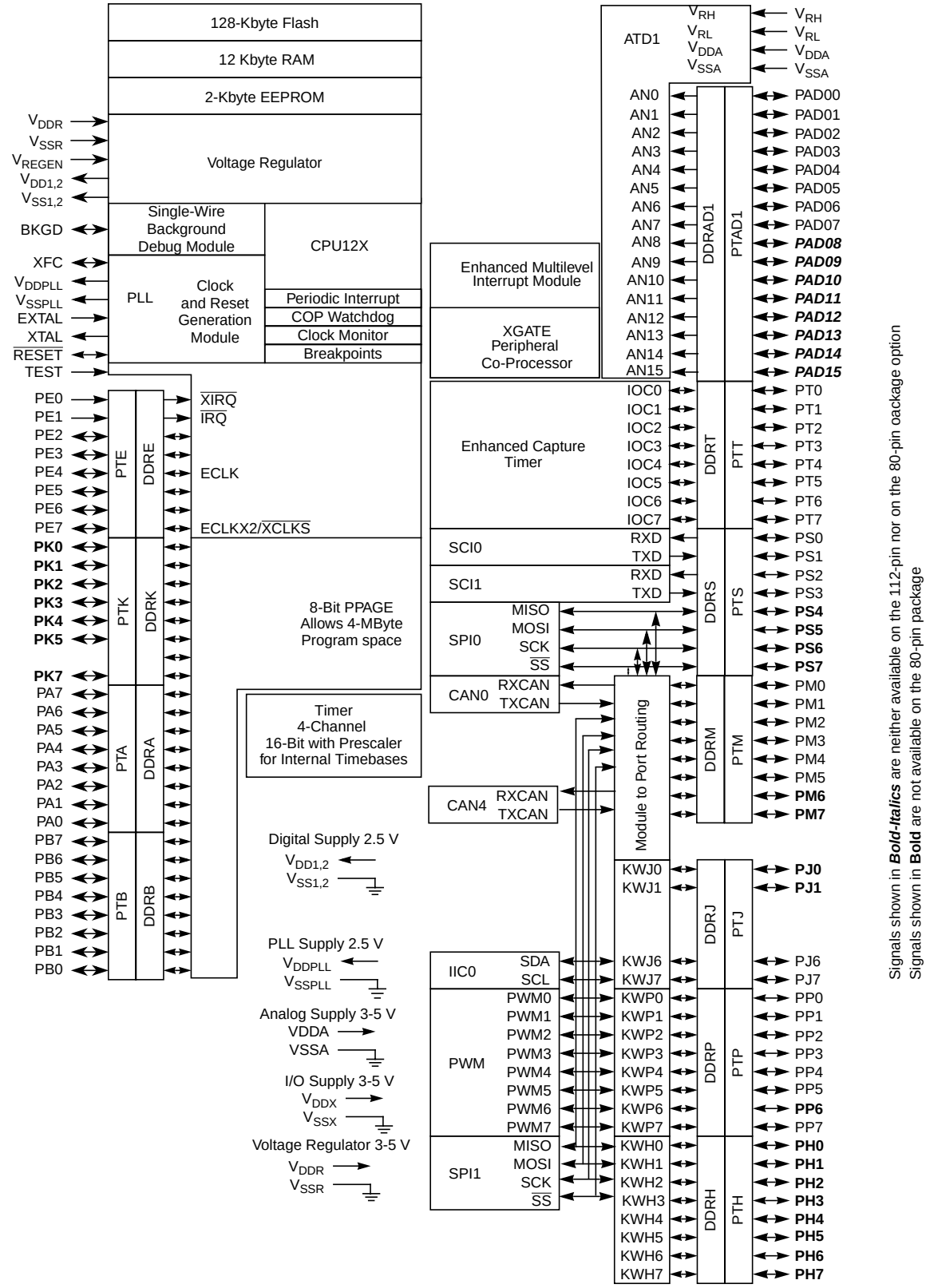

Figure 1-2. Block Diagram Maskset M42E

1.1.4 Device Memory Map

Table 1-1shows the device register memory map of the MC9S12XDP512. Available modules on other Family members please refer to Appendix E Derivative Differences

Unimplemented register space shown in Table 1-1 is not allocated to any module. Writing to these locations have no effect. Read access to these locations returns zero. Figure 1-1 shows the global address mapping for the parts listed in Table 1-2.

Table 1-1. Device Register Memory Map

Address	Module	Size (Bytes)
0x0000–0x0009	PIM (port integration module)	10
0x000A–0x000B	MMC (memory map control)	2
0x000C–0x000D	PIM (port integration module)	2
0x000E–0x000F	EBI (external bus interface)	2
0x0010–0x0017	MMC (memory map control)	8
0x0018–0x0019	Unimplemented	2
0x001A–0x001B	Device ID register	2
0x001C–0x001F	PIM (port integration module)	4
0x0020–0x002F	DBG (debug module)	16
0x0030–0x0031	MMC (memory map control)	2
0x0032–0x0033	PIM (port integration module)	2
0x0034–0x003F	CRG (clock and reset generator)	12
0x0040–0x007F	ECT (enhanced capture timer 16-bit 8-channel)s	64
0x0080–0x00AF	ATD1 (analog-to-digital converter 10-bit 16-channel)	48
0x00B0–0x00B7	IIC1 (inter IC bus)	8
0x00B8–0x00C7	Reserved	16
0x00B8–0x00BF	SCI2 (serial communications interface)	8
0x00C0–0x00C7	SCI3 (serial communications interface)	8
0x00C8–0x00CF	SCI0 (serial communications interface)	8
0x00D0–0x00D7	SCI1 (serial communications interface)	8
0x00D8–0x00DF	SPI0 (serial peripheral interface)	8
0x00E0–0x00E7	IIC0 (inter IC bus)	8
0x00E8–0x00EF	Unimplemented	8
0x00F0–0x00F7	SPI1 (serial peripheral interface)	8
0x00F8–0x013F	Reserved	8
0x00F8–0x00FF	SPI2 (serial peripheral interface)	8
0x0100–0x010F	Flash control register	16

Table 1-1. Device Register Memory Map (continued)

Address	Module	Size (Bytes)
0x0110–0x011B	EEPROM control register	12
0x011C–0x011F	MMC (memory map control)	4
0x0120–0x012F	INT (interrupt module)	16
0x0130–0x013F	Reserved	16
0x0130–0x0137	SCI4 (serial communications interface)	8
0x0138–0x013F	SCI5 (serial communications interface)	8
0x0140–0x017F	CAN0 (scalable CAN)	64
0x0180–0x01BF	CAN1 (scalable CAN)	64
0x0180–0x023F	Reserved	192
0x01C0–0x01FF	CAN2 (scalable CAN)	64
0x0200–0x023F	Reserved	64
0x0200–0x023F	CAN3 (scalable CAN)	64
0x0240–0x027F	PIM (port integration module)	64
0x0280–0x02BF	CAN4 (scalable CAN)	64
0x02C0–0x02DF	Reserved	32
0x02C0–0x02DF	ATD0 (analog-to-digital converter 10 bit 8-channel)	32
0x02E0–0x02EF	Unimplemented	16
0x02F0–0x02F7	Voltage regulator	8
0x02F8–0x02FF	Unimplemented	8
0x0300–0x0327	PWM (pulse-width modulator 8 channels)	40
0x0328–0x033F	Unimplemented	24
0x0340–0x0367	Periodic interrupt timer	40
0x0368–0x037F	Unimplemented	24
0x0380–0x03BF	XGATE	64
0x03C0–0x03FF	Unimplemented	64
0x0400–0x07FF	Unimplemented	1024

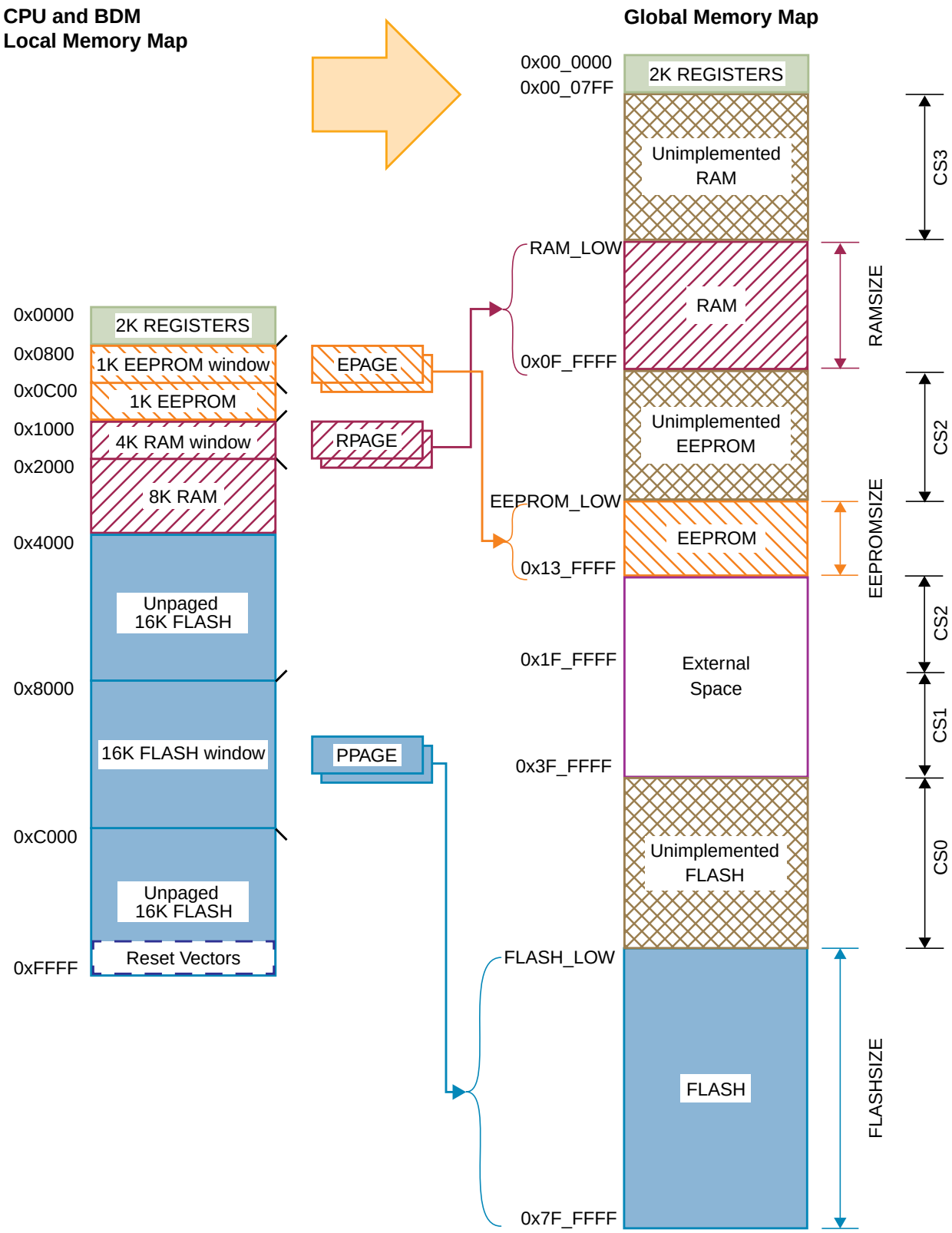

Figure 1-3. S12X CPU & BDM Global Address Mapping

Table 1-2. Device Internal Resources (see Figure 1-3)

Device	RAMSIZE/ RAM_LOW	EEPROMSIZE/ EEPROM_LOW	FLASHSIZE/ FLASH_LOW
9S12XDP512	32K 0x0F_8000	4K 0x13_F000	512K 0x78_0000
9S12XDT512	20K 0x0F_B000	4K 0x13_F000	512K 0x78_0000
9S12XA512	32K 0x0F_8000	4K 0x13_F000	512K 0x78_0000
9S12XDG128	12K 0x0F_D000	2K 0x13_F800	128K 7E_0000
3S12XDG128	12K 0x0F_D000	2K 0x13_F800	128K 7E_0000
9S12XD128	8K 0x0F_E000	2K 0x13_F800	128K 7E_0000
9S12XD64	4K 0x0F_F000	1K 0x13_FC00	64K 7F_0000
9S12XB128	6K 0x0F_E800	1K 0x13_FC00	128K 7E_0000
9S12XA128	12K 0x0F_D000	2K 0x13_F800	128K 7E_0000

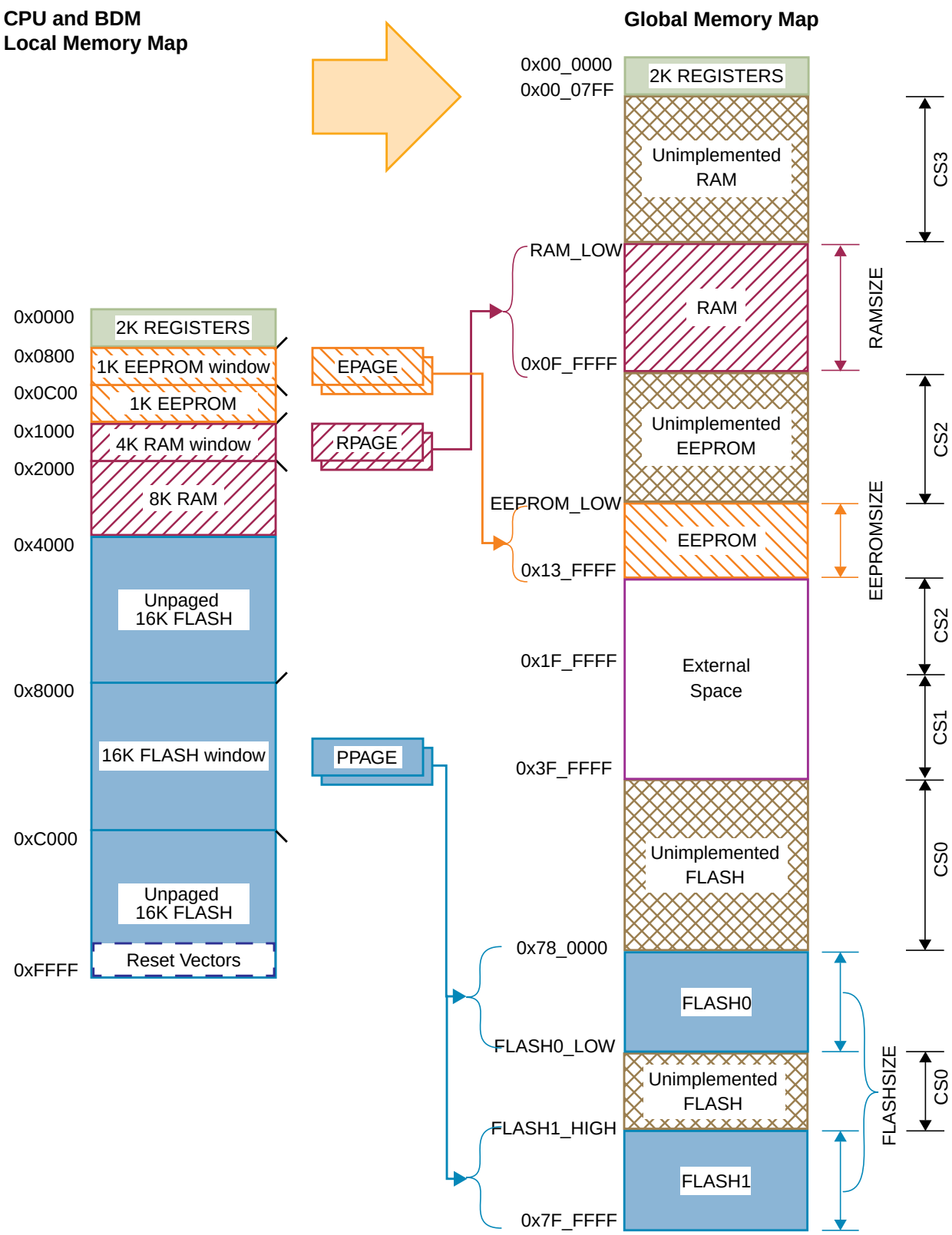

Figure 1-4. S12X CPU & BDM Global Address Mapping

Table 1-3. Device Internal Resources (see Figure 1-4)

Device	RAMSIZE/ RAM_LOW	EEPROMSIZE/ EEPROM_LOW	FLASHSIZE0/ FLASH_LOW	FLASHSIZE1/ FLASH_HIGH
9S12XDT384	20K 0x0F_B000	4K 0x13_F000	128K 0x79_FFFF	256K 0x7C_0000
9S12XDQ256	16K 0x0F_C000	4K 0x13_F000	128K 0x79_FFFF	128K 0x7E_0000
9S12XDT256	16K 0x0F_C000	4K 0x13_F000		
9S12XD256	14K 0x0F_C800	4K 0x13_F000		
9S12XA256	16K 0x0F_C000	4K 0x13_F000		
9S12XB256	10K 0x0F_D800	2K 0x13_F800		

Figure 1-5. GATE Global Address Mapping

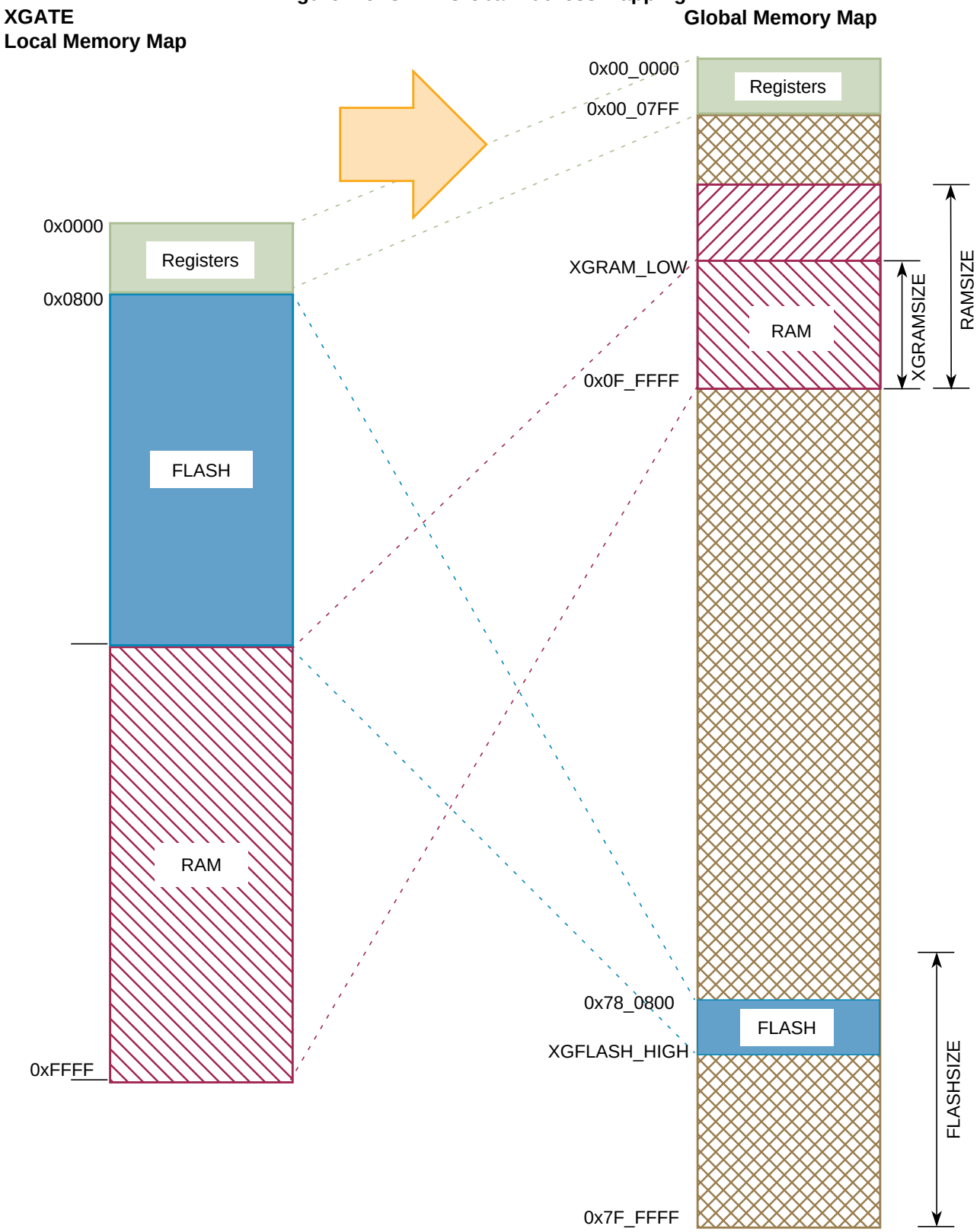

Table 1-4. XGATE Resources (see Figure 1-5)

Device	XGRANMSIZE XGRAM_LOW	XGFLASHSIZE[1] XGFLASH_HIGH
9S12XDP512	32K 0x0F_8000	30K 0x78_7FFF
9S12XDT512	20K 0x0F_B000	
9S12XDT384	20K 0x0F_B000	
9S12XA512	32K 0x0F_8000	
9S12XDQ256	16K 0x0F_C000	
9S12XD256	16K 0x0F_C000	
9S12XB256	10K 0x0F_D800	
9S12XA256	16K 0x0F_C000	

[1] Available Flah Memory 30K on all listed parts

Figure 1-6. XGATE Global Address Mapping

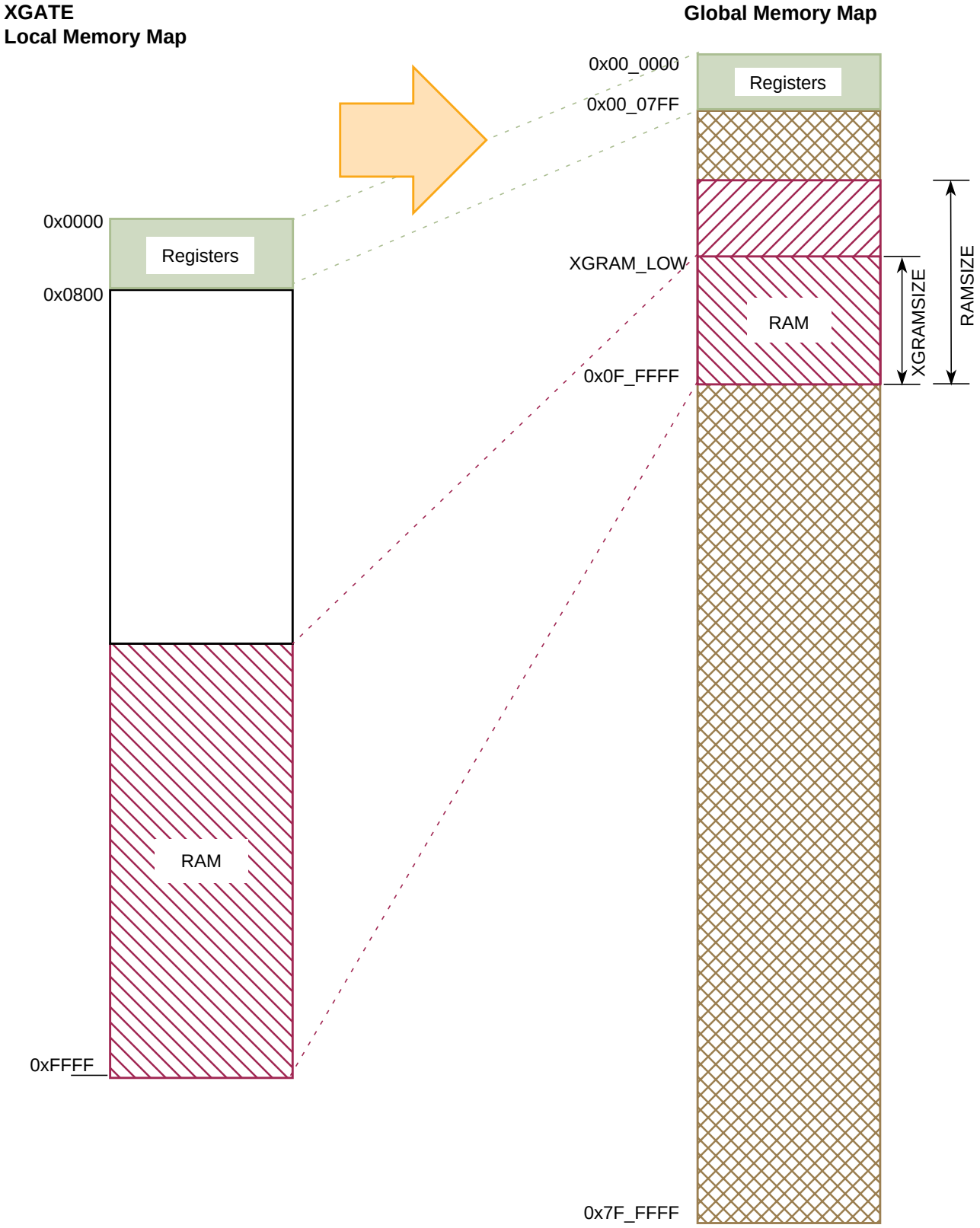

Table 1-5. XGATE Resources (see Figure 1-6)

Device	XGRAMSIZE	XGRAM_LOW
9S12XDG128	12K	0x0F_D000
3S12XDG128	12K	0x0F_D000
9S12XD128	8K	0x0F_E000
9S12XD64	4K	0x0F_F000
9S12XB128	6K	0x0F_E800
9S12XA128	12K	0x0F_D000

1.1.5 Part ID Assignments & Maskset Numbers

The part ID is located in two 8-bit registers PARTIDH and PARTIDL (addresses 0x001A and 0x001B). The read-only value is a unique part ID for each revision of the chip. Table 1-6 shows the assigned part ID number and Mask Set number.

Table 1-6. Part Names, Masksets and Assigned Part ID Numbers

Part Names	Mask Set Number	Part ID[1]
MC9S12XDP512	0L15Y/1L15Y	0xC410/0xC411
MC9S12XDT512	0L15Y/1L15Y	0xC410/0xC411
MC9S12XA512	0L15Y/1L15Y	0xC410/0xC411
MC9S12XDT384	0L15Y/1L15Y	0xC410/0xC411
MC9S12XDQ256	0L15Y/1L15Y	0xC410/0xC411
	0M84E/1M84E	0xC000/0xC001
MC9S12XDT256	0L15Y/1L15Y	0xC410/0xC411
	0M84E/1M84E	0xC000/0xC001
MC9S12XD256	0L15Y/1L15Y	0xC410/0xC411
	0M84E/1M84E	0xC000/0xC001
MC9S12XB256	0L15Y/1L15Y	0xC410/0xC411
	0M84E/1M84E	0xC000/0xC001
MC9S12XA256	0L15Y/1L15Y	0xC410/0xC411
	0M84E/1M84E	0xC000/0xC001
MC9S12XDG128	0L15Y/1L15Y	0xC410/0xC411
	0M42E/1M42E/2M42E	0xC100/0xC101/0xC102
MC9S12XD128	0L15Y/1L15Y	0xC410/0xC411
	0M42E/1M42E/2M42E	0xC100/0xC101/0xC102
MC9S12XA128	0L15Y/1L15Y	0xC410/0xC411
	0M42E/1M42E/2M42E	0xC100/0xC101/0xC102
MC9S12XB128	0L15Y/1L15Y	0xC410/0xC411
	0M42E/1M42E/2M42E	0xC100/0xC101/0xC102

[1] The coding is as follows:
Bit 15-12: Major family identifier
Bit 11-8: Minor family identifier
Bit 7-4: Major mask set revision number including FAB transfers
Bit 3-0: Minor — non full — mask set revision

1.2 Signal Description

This section describes signals that connect off-chip. It includes a pinout diagram, a table of signal properties, and detailed discussion of signals.

1.2.1 Device Pinout

The MC9S12XD family of devices offers pin-compatible packaged devices to assist with system development and accommodate expansion of the application.

The S12XD, S12XA and S12XB family devices are offered in the following packages:

- 144-pin LQFP package with an external bus interface (address/data bus)
- 112-pin LQFP without external bus interface
- 80-pin QFP without external bus interface

See Appendix E Derivative Differences for package options.

CAUTION

Most the I/O Pins have different functionality depending on the module configuration. Not all functions are shown in the following pinouts. Please refer to Table 1-7 for a complete description. For avalability of the modules on different family members refer to Appendix E Derivative Differences. For pinout explanations of the different parts refer to E.7 Pinout explanations:

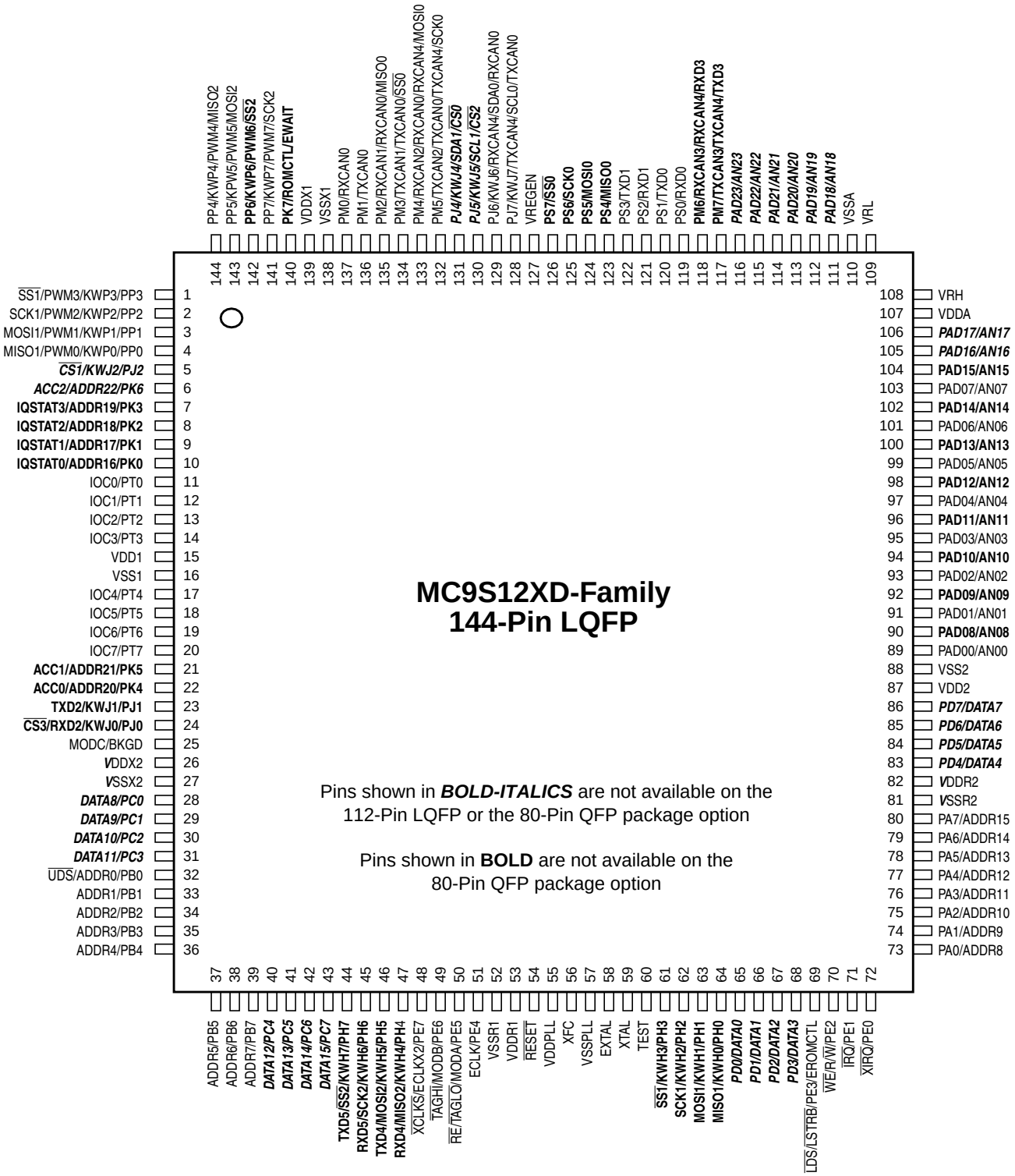

Figure 1-7. MC9S12XD Family Pin Assignment 144-Pin LQFP Package

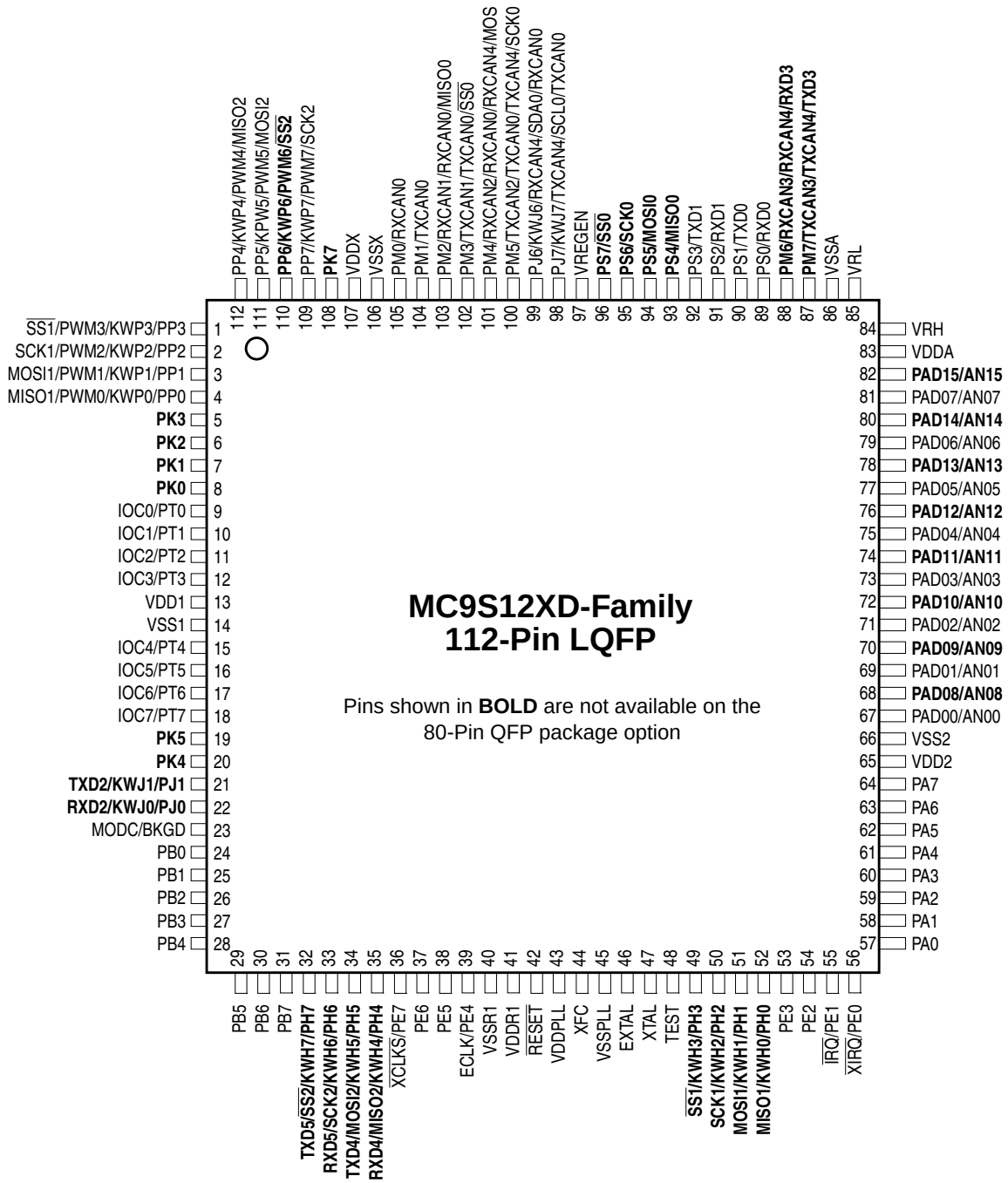

Figure 1-8. MC9S12XD Family Pin Assignments 112-Pin LQFP Package

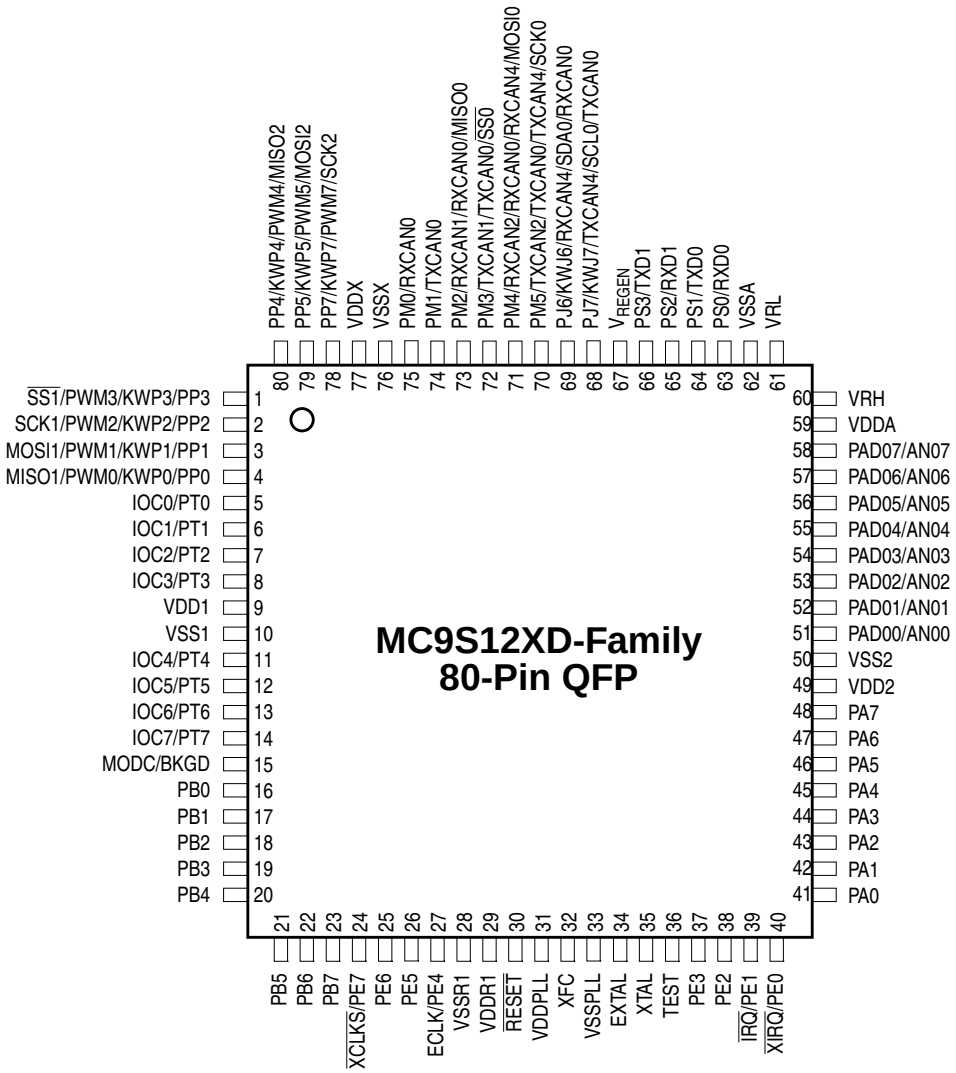

Figure 1-9. MC9S12XD Family Pin Assignments 80-Pin QFP Package

1.2.2 Signal Properties Summary

Table 1-7 summarizes the pin functionality of the MC9S12XDP512. For available modules on other parts of the S12XD, S12XB and S12XA family please refer to Appendix E Derivative Differences.

Table 1-7. Signal Properties Summary (Sheet 1 of 4)

Pin Name Function 1	Pin Name Function 2	Pin Name Function 3	Pin Name Function 4	Pin Name Function 5	Power Supply	Internal Pull Resistor		Description
						CTRL	Reset State	
EXTAL	—	—	—	—	V_{DDPLL}	NA	NA	Oscillator pins
XTAL	—	—	—	—	V_{DDPLL}	NA	NA	
$\overline{RESET}$	—	—	—	—	V_{DDR}	PULLUP		External reset
TEST	—	—	—	—	N.A.	$\overline{RESET}$ pin	DOWN	Test input
VREGEN	—	—	—	—	V_{DDX}	PUCR	Up	Voltage regulator enable Input
XFC	—	—	—	—	V_{DDPLL}	NA	NA	PLL loop filter
BKGD	MODC	—	—	—	V_{DDX}	Always on	Up	Background debug
PAD[23:08]	AN[23:8]	—	—	—	V_{DDA}	PER0/ PER1	Disabled	Port AD I/O, Port AD inputs of ATD1 and analog inputs of ATD1
PAD[07:00]	AN[7:0]	—	—	—	V_{DDA}	PER1	Disabled	Port AD I/O, Port AD inputs of ATD0 and analog inputs of ATD0
PA[7:0]	—	—	—	—	V_{DDR}	PUCR	Disabled	Port A I/O
PB[7:0]	—	—	—	—	V_{DDR}	PUCR	Disabled	Port BI/O
PA[7:0]	ADDR[15:8]	IVD[15:8]	—	—	V_{DDR}	PUCR	Disabled	Port A I/O, address bus, internal visibility data
PB[7:1]	ADDR[7:1]	IVD[7:0]	—	—	V_{DDR}	PUCR	Disabled	Port B I/O, address bus, internal visibility data
PB0	ADDR0	$\overline{UDS}$			V_{DDR}	PUCR	Disabled	Port B I/O, address bus, upper data strobe
PC[7:0]	DATA[15:8]	—	—	—	V_{DDR}	PUCR	Disabled	Port C I/O, data bus
PD[7:0]	DATA[7:0]	—	—	—	V_{DDR}	PUCR	Disabled	Port D I/O, data bus
PE7	ECLKX2	$\overline{XCLKS}$	—	—	V_{DDR}	PUCR	Up	Port E I/O, system clock output, clock select
PE6	$\overline{TAGHI}$	MODB	—	—	V_{DDR}	While $\overline{RESET}$ pin is low: down		Port E I/O, tag high, mode input
PE5	$\overline{RE}$	MODA	$\overline{TAGLO}$	—	V_{DDR}	While $\overline{RESET}$ pin is low: down		Port E I/O, read enable, mode input, tag low input
PE4	ECLK	—	—	—	V_{DDR}	PUCR	Up	Port E I/O, bus clock output
PE3	$\overline{LSTRB}$	$\overline{LDS}$	EROMCTL	—	V_{DDR}	PUCR	Up	Port E I/O, low byte data strobe, EROMON control
PE2	R/$\overline{W}$	$\overline{WE}$	—	—	V_{DDR}	PUCR	Up	Port E I/O, read/write
PE1	$\overline{IRQ}$	—	—	—	V_{DDR}	PUCR	Up	Port E Input, maskable interrupt

Table 1-7. Signal Properties Summary (Sheet 2 of 4)

Pin Name Function 1	Pin Name Function 2	Pin Name Function 3	Pin Name Function 4	Pin Name Function 5	Power Supply	Internal Pull Resistor		Description
						CTRL	Reset State	
PE0	$\overline{XIRQ}$	—	—	—	V_{DDR}	PUCR	Up	Port E input, non-maskable interrupt
PH7	KWH7	$\overline{SS2}$	TXD5	—	V_{DDR}	PERH/PPSH	Disabled	Port H I/O, interrupt, $\overline{SS}$ of SPI2, TXD of SCI5
PH6	KWH6	SCK2	RXD5	—	V_{DDR}	PERH/ PPSH	Disabled	Port H I/O, interrupt, SCK of SPI2, RXD of SCI5
PH5	KWH5	MOSI2	TXD4	—	V_{DDR}	PERH/ PPSH	Disabled	Port H I/O, interrupt, MOSI of SPI2, TXD of SCI4
PH4	KWH4	MISO2	RXD4	—	V_{DDR}	PERH/PPSH	Disabled	Port H I/O, interrupt, MISO of SPI2, RXD of SCI4
PH3	KWH3	$\overline{SS1}$	—	—	V_{DDR}	PERH/PPSH	Disabled	Port H I/O, interrupt, $\overline{SS}$ of SPI1
PH2	KWH2	SCK1	—	—	V_{DDR}	PERH/PPSH	Disabled	Port H I/O, interrupt, SCK of SPI1
PH1	KWH1	MOSI1	—	—	V_{DDR}	PERH/PPSH	Disabled	Port H I/O, interrupt, MOSI of SPI1
PH0	KWH0	MISO1	—	—	V_{DDR}	PERH/PPSH	Disabled	Port H I/O, interrupt, MISO of SPI1
PJ7	KWJ7	TXCAN4	SCL0	TXCAN0	V_{DDX}	PERJ/ PPSJ	Up	Port J I/O, interrupt, TX of CAN4, SCL of IIC0, TX of CAN0
PJ6	KWJ6	RXCAN4	SDA0	RXCAN0	V_{DDX}	PERJ/ PPSJ	Up	Port J I/O, interrupt, RX of CAN4, SDA of IIC0, RX of CAN0
PJ5	KWJ5	SCL1	$\overline{CS2}$	—	V_{DDX}	PERJ/ PPSJ	Up	Port J I/O, interrupt, SCL of IIC1, chip select 2
PJ4	KWJ4	SDA1	$\overline{CS0}$	—	V_{DDX}	PERJ/ PPSJ	Up	Port J I/O, interrupt, SDA of IIC1, chip select 0
PJ2	KWJ2	$\overline{CS1}$	—	—	V_{DDX}	PERJ/ PPSJ	Up	Port J I/O, interrupt, chip select 1
PJ1	KWJ1	TXD2	—	—	V_{DDX}	PERJ/ PPSJ	Up	Port J I/O, interrupt, TXD of SCI2
PJ0	KWJ0	RXD2	$\overline{CS3}$	—	V_{DDX}	PERJ/ PPSJ	Up	Port J I/O, interrupt, RXD of SCI2
PK7	—	—	—	—	V_{DDX}	PUCR	Up	Port K I/O
PK[5:4]	—	—	—	—	V_{DDX}	PUCR	Up	Port K I/O
PK7	$\overline{EWAIT}$	ROMCTL	—	—	V_{DDX}	PUCR	Up	Port K I/O, EWAIT input, ROM on control
PK[6:4]	ADDR [22:20]	ACC[2:0]	—	—	V_{DDX}	PUCR	Up	Port K I/O, extended addresses, access source for external access
PK3	ADDR19	IQSTAT3	—	—	V_{DDX}	PUCR	Up	Extended address, PIPE status

Table 1-7. Signal Properties Summary (Sheet 3 of 4)

Pin Name Function 1	Pin Name Function 2	Pin Name Function 3	Pin Name Function 4	Pin Name Function 5	Power Supply	Internal Pull Resistor		Description
						CTRL	Reset State	
PK2	ADDR18	IQSTAT2	—	—	V_{DDX}	PUCR	Up	Extended address, PIPE status
PK1	ADDR17	IQSTAT1	—	—	V_{DDX}	PUCR	Up	Extended address, PIPE status
PK0	ADDR16	IQSTAT0	—	—	V_{DDX}	PUCR	Up	Extended address, PIPE status
PM7	TXCAN3	TXD3	TXCAN4	—	V_{DDX}	PERM/ PPSM	Disabled	Port M I/O, TX of CAN3 and CAN4, TXD of SCI3
PM6	RXCAN3	RXD3	RXCAN4	—	V_{DDX}	PERM/PPSM	Disabled	Port M I/O RX of CAN3 and CAN4, RXD of SCI3
PM5	TXCAN2	TXCAN0	TXCAN4	SCK0	V_{DDX}	PERM/PPSM	Disabled	Port M I/O CAN0, CAN2, CAN4, SCK of SPI0
PM4	RXCAN2	RXCAN0	RXCAN4	MOSI0	V_{DDX}	PERM/PPSM	Disabled	Port M I/O, CAN0, CAN2, CAN4, MOSI of SPI0
PM3	TXCAN1	TXCAN0	—	$\overline{SS0}$	V_{DDX}	PERM/PPSM	Disabled	Port M I/O TX of CAN1, CAN0, $\overline{SS}$ of SPI0
PM2	RXCAN1	RXCAN0	—	MISO0	V_{DDX}	PERM/PPSM	Disabled	Port M I/O, RX of CAN1, CAN0, MISO of SPI0
PM1	TXCAN0		—	—	V_{DDX}	PERM/PPSM	Disabled	Port M I/O, TX of CAN0
PM0	RXCAN0		—	—	V_{DDX}	PERM/PPSM	Disabled	Port M I/O, RX of CAN0
PP7	KWP7	PWM7	SCK2	—	V_{DDX}	PERP/ PPSP	Disabled	Port P I/O, interrupt, channel 7 of PWM, SCK of SPI2
PP6	KWP6	PWM6	$\overline{SS2}$	—	V_{DDX}	PERP/ PPSP	Disabled	Port P I/O, interrupt, channel 6 of PWM, $\overline{SS}$ of SPI2
PP5	KWP5	PWM5	MOSI2	—	V_{DDX}	PERP/ PPSP	Disabled	Port P I/O, interrupt, channel 5 of PWM, MOSI of SPI2
PP4	KWP4	PWM4	MISO2	—	V_{DDX}	PERP/ PPSP	Disabled	Port P I/O, interrupt, channel 4 of PWM, MISO2 of SPI2
PP3	KWP3	PWM3	$\overline{SS1}$	—	V_{DDX}	PERP/ PPSP	Disabled	Port P I/O, interrupt, channel 3 of PWM, $\overline{SS}$ of SPI1
PP2	KWP2	PWM2	SCK1	—	V_{DDX}	PERP/ PPSP	Disabled	Port P I/O, interrupt, channel 2 of PWM, SCK of SPI1
PP1	KWP1	PWM1	MOSI1	—	V_{DDX}	PERP/ PPSP	Disabled	Port P I/O, interrupt, channel 1 of PWM, MOSI of SPI1
PP0	KWP0	PWM0	MISO1	—	V_{DDX}	PERP/ PPSP	Disabled	Port P I/O, interrupt, channel 0 of PWM, MISO2 of SPI1
PS7	$\overline{SS0}$	—	—	—	V_{DDX}	PERS/ PPSS	Up	Port S I/O, $\overline{SS}$ of SPI0
PS6	SCK0	—	—	—	V_{DDX}	PERS/ PPSS	Up	Port S I/O, SCK of SPI0

Table 1-7. Signal Properties Summary (Sheet 4 of 4)

Pin Name Function 1	Pin Name Function 2	Pin Name Function 3	Pin Name Function 4	Pin Name Function 5	Power Supply	Internal Pull Resistor		Description
						CTRL	Reset State	
PS5	MOSI0	—	—	—	V_{DDX}	PERS/ PPSS	Up	Port S I/O, MOSI of SPI0
PS4	MISO0	—	—	—	V_{DDX}	PERS/ PPSS	Up	Port S I/O, MISO of SPI0
PS3	TXD1	—	—	—	V_{DDX}	PERS/ PPSS	Up	Port S I/O, TXD of SCI1
PS2	RXD1	—	—	—	V_{DDX}	PERS/ PPSS	Up	Port S I/O, RXD of SCI1
PS1	TXD0	—	—	—	V_{DDX}	PERS/ PPSS	Up	Port S I/O, TXD of SCI0
PS0	RXD0	—	—	—	V_{DDX}	PERS/ PPSS	Up	Port S I/O, RXD of SCI0
PT[7:0]	IOC[7:0]	—	—	—	V_{DDX}	PERT/ PPST	Disabled	Port T I/O, timer channels

NOTE

For devices assembled in 80-pin and 112-pin packages all non-bonded out pins should be configured as outputs after reset in order to avoid current drawn from floating inputs. Refer to Table 1-7 for affected pins.

1.2.3 Detailed Signal Descriptions

NOTE

This section describes all pins which are availabe on the cover part MC9S12XDP512 in 144-pin LQFP package. For modules and pinout explanations of the different family members refer to E.7 Pinout explanations: and E.5 Peripheral Sets S12XD - Family and E.6 Peripheral Sets S12XA & S12XB - Family

1.2.3.1 EXTAL, XTAL — Oscillator Pins

EXTAL and XTAL are the crystal driver and external clock pins. On reset all the device clocks are derived from the EXTAL input frequency. XTAL is the crystal output.

1.2.3.2 $\overline{\text{RESET}}$ — External Reset Pin

The $\overline{\text{RESET}}$ pin is an active low bidirectional control signal. It acts as an input to initialize the MCU to a known start-up state, and an output when an internal MCU function causes a reset.The $\overline{\text{RESET}}$ pin has an internal pullup device.

1.2.3.3 TEST — Test Pin

This input only pin is reserved for test. This pin has a pulldown device.

NOTE

The TEST pin must be tied to V_{SS} in all applications.

1.2.3.4 VREGEN — Voltage Regulator Enable Pin

This input only pin enables or disables the on-chip voltage regulator. The input has a pullup device.

1.2.3.5 XFC — PLL Loop Filter Pin

Please ask your Freescale representative for the interactive application note to compute PLL loop filter elements. Any current leakage on this pin must be avoided.

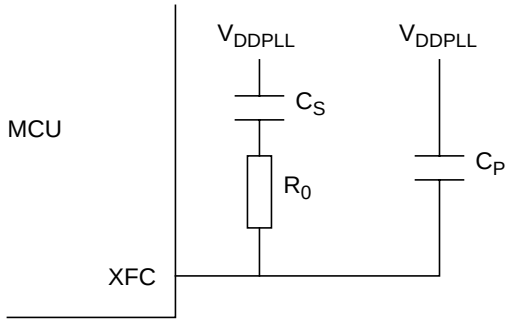

Figure 1-10. PLL Loop Filter Connections

1.2.3.6 BKGD / MODC — Background Debug and Mode Pin

The BKGD/MODC pin is used as a pseudo-open-drain pin for the background debug communication. It is used as a MCU operating mode select pin during reset. The state of this pin is latched to the MODC bit at the rising edge of $\overline{RESET}$. The BKGD pin has a pullup device.

1.2.3.7 PAD[23:8] / AN[23:8] — Port AD Input Pins of ATD1

PAD[23:8] are general-purpose input or output pins and analog inputs AN[23:8] of the analog-to-digital converter ATD1.

1.2.3.8 PAD[7:0] / AN[7:0] — Port AD Input Pins of ATD0

PAD[7:0] are general-purpose input or output pins and analog inputs AN[7:0] of the analog-to-digital converter ATD0.

1.2.3.9 PAD[15:0] / AN[15:0] — Port AD Input Pins of ATD1

PAD[15:0] are general-purpose input or output pins and analog inputs AN[15:0] of the analog-to-digital converter ATD1.

1.2.3.10 PA[7:0] / ADDR[15:8] / IVD[15:8] — Port A I/O Pins

PA[7:0] are general-purpose input or output pins. In MCU expanded modes of operation, these pins are used for the external address bus. In MCU emulation modes of operation, these pins are used for external address bus and internal visibility read data.

1.2.3.11 PB[7:1] / ADDR[7:1] / IVD[7:1] — Port B I/O Pins

PB[7:1] are general-purpose input or output pins. In MCU expanded modes of operation, these pins are used for the external address bus. In MCU emulation modes of operation, these pins are used for external address bus and internal visibility read data.

1.2.3.12 PB0 / ADDR0 / $\overline{\text{UDS}}$ / IVD[0] — Port B I/O Pin 0

PB0 is a general-purpose input or output pin. In MCU expanded modes of operation, this pin is used for the external address bus ADDR0 or as upper data strobe signal. In MCU emulation modes of operation, this pin is used for external address bus ADDR0 and internal visibility read data IVD0.

1.2.3.13 PB[7:0] — Port B I/O Pins

PB[7:0] are general-purpose input or output pins.

1.2.3.14 PC[7:0] / DATA [15:8] — Port C I/O Pins

PC[7:0] are general-purpose input or output pins. In MCU expanded modes of operation, these pins are used for the external data bus.

The input voltage thresholds for PC[7:0] can be configured to reduced levels, to allow data from an external 3.3-V peripheral to be read by the MCU operating at 5.0 V. The input voltage thresholds for PC[7:0] are configured to reduced levels out of reset in expanded and emulation modes. The input voltage thresholds for PC[7:0] are configured to 5-V levels out of reset in normal modes.

1.2.3.15 PD[7:0] / DATA [7:0] — Port D I/O Pins

PD[7:0] are general-purpose input or output pins. In MCU expanded modes of operation, these pins are used for the external data bus.

The input voltage thresholds for PD[7:0] can be configured to reduced levels, to allow data from an external 3.3-V peripheral to be read by the MCU operating at 5.0 V. The input voltage thresholds for PD[7:0] are configured to reduced levels out of reset in expanded and emulation modes. The input voltage thresholds for PC[7:0] are configured to 5-V levels out of reset in normal modes.

1.2.3.16 PE7 / ECLKX2 / $\overline{\text{XCLKS}}$ — Port E I/O Pin 7

PE7 is a general-purpose input or output pin. The $\overline{\text{XCLKS}}$ is an input signal which controls whether a crystal in combination with the internal loop controlled (low power) Pierce oscillator is used or whether full swing Pierce oscillator/external clock circuitry is used.

The $\overline{\text{XCLKS}}$ signal selects the oscillator configuration during reset low phase while a clock quality check is ongoing. This is the case for:

- Power on reset or low-voltage reset
- Clock monitor reset
- Any reset while in self-clock mode or full stop mode

The selected oscillator configuration is frozen with the rising edge of reset.

The pin can be configured to drive the internal system clock ECLKX2.

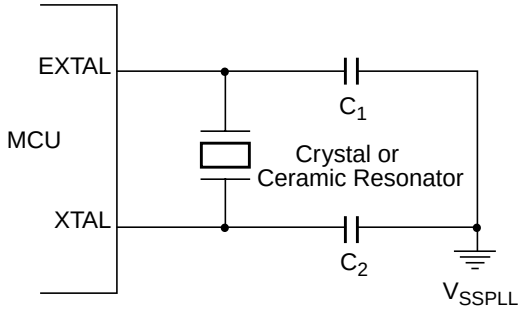

Figure 1-11. Loop Controlled Pierce Oscillator Connections (PE7 = 1)

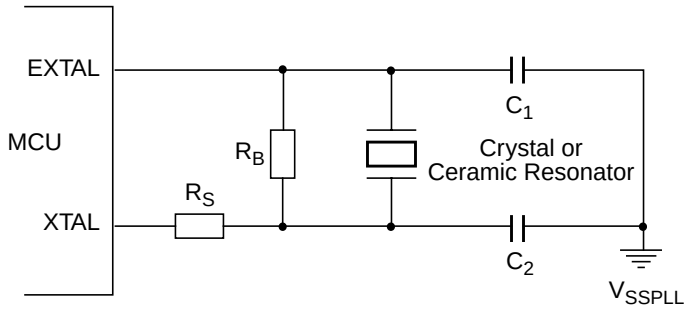

Figure 1-12. Full Swing Pierce Oscillator Connections (PE7 = 0)

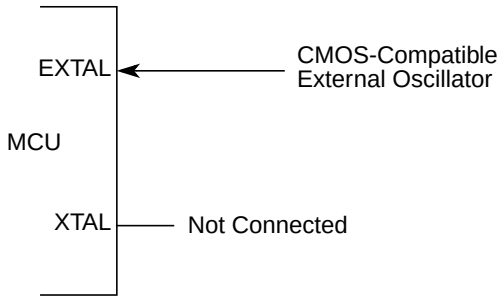

Figure 1-13. External Clock Connections (PE7 = 0)

1.2.3.17 PE6 / MODB / $\overline{\text{TAGHI}}$ — Port E I/O Pin 6

PE6 is a general-purpose input or output pin. It is used as a MCU operating mode select pin during reset. The state of this pin is latched to the MODB bit at the rising edge of $\overline{\text{RESET}}$. This pin is an input with a

pull-down device which is only active when $\overline{\text{RESET}}$ is low. $\overline{\text{TAGHI}}$ is used to tag the high half of the instruction word being read into the instruction queue.

The input voltage threshold for PE6 can be configured to reduced levels, to allow data from an external 3.3-V peripheral to be read by the MCU operating at 5.0 V. The input voltage threshold for PE6 is configured to reduced levels out of reset in expanded and emulation modes.

1.2.3.18 PE5 / MODA / $\overline{\text{TAGLO}}$ / $\overline{\text{RE}}$ — Port E I/O Pin 5

PE5 is a general-purpose input or output pin. It is used as a MCU operating mode select pin during reset. The state of this pin is latched to the MODA bit at the rising edge of $\overline{\text{RESET}}$. This pin is shared with the read enable $\overline{\text{RE}}$ output. This pin is an input with a pull-down device which is only active when $\overline{\text{RESET}}$ is low. $\overline{\text{TAGLO}}$ is used to tag the low half of the instruction word being read into the instruction queue.

The input voltage threshold for PE5 can be configured to reduced levels, to allow data from an external 3.3-V peripheral to be read by the MCU operating at 5.0 V. The input voltage threshold for PE5 is configured to reduced levels out of reset in expanded and emulation modes.

1.2.3.19 PE4 / ECLK — Port E I/O Pin 4

PE4 is a general-purpose input or output pin. It can be configured to drive the internal bus clock ECLK. ECLK can be used as a timing reference.

1.2.3.20 PE3 / $\overline{\text{LSTRB}}$ / $\overline{\text{LDS}}$ / EROMCTL— Port E I/O Pin 3

PE3 is a general-purpose input or output pin. In MCU expanded modes of operation, $\overline{\text{LSTRB}}$ or $\overline{\text{LDS}}$ can be used for the low byte strobe function to indicate the type of bus access. At the rising edge of $\overline{\text{RESET}}$ the state of this pin is latched to the EROMON bit.

1.2.3.21 PE2 / R/$\overline{\text{W}}$ / $\overline{\text{WE}}$— Port E I/O Pin 2

PE2 is a general-purpose input or output pin. In MCU expanded modes of operations, this pin drives the read/write output signal or write enable output signal for the external bus. It indicates the direction of data on the external bus

1.2.3.22 PE[6:2] — Port E I/O Pins

PE[6:2] are general-purpose input or output pins.

1.2.3.23 PE1 / $\overline{\text{IRQ}}$ — Port E Input Pin 1

PE1 is a general-purpose input pin and the maskable interrupt request input that provides a means of applying asynchronous interrupt requests. This will wake up the MCU from stop or wait mode.

1.2.3.24 PE0 / $\overline{\text{XIRQ}}$ — Port E Input Pin 0

PE0 is a general-purpose input pin and the non-maskable interrupt request input that provides a means of applying asynchronous interrupt requests. This will wake up the MCU from stop or wait mode.

1.2.3.25 PH7 / KWH7 / $\overline{SS2}$ / TXD5 — Port H I/O Pin 7

PH7 is a general-purpose input or output pin. It can be configured to generate an interrupt causing the MCU to exit stop or wait mode. It can be configured as slave select pin $\overline{SS}$ of the serial peripheral interface 2 (SPI2). It can be configured as the transmit pin TXD of serial communication interface 5 (SCI5).

1.2.3.26 PH6 / KWH6 / SCK2 / RXD5 — Port H I/O Pin 6

PH6 is a general-purpose input or output pin. It can be configured to generate an interrupt causing the MCU to exit stop or wait mode. It can be configured as serial clock pin SCK of the serial peripheral interface 2 (SPI2). It can be configured as the receive pin (RXD) of serial communication interface 5 (SCI5).

1.2.3.27 PH5 / KWH5 / MOSI2 / TXD4 — Port H I/O Pin 5

PH5 is a general-purpose input or output pin. It can be configured to generate an interrupt causing the MCU to exit stop or wait mode. It can be configured as master output (during master mode) or slave input pin (during slave mode) MOSI of the serial peripheral interface 2 (SPI2). It can be configured as the transmit pin TXD of serial communication interface 4 (SCI4).

1.2.3.28 PH4 / KWH4 / MISO2 / RXD4 — Port H I/O Pin 4

PH4 is a general-purpose input or output pin. It can be configured to generate an interrupt causing the MCU to exit stop or wait mode. It can be configured as master input (during master mode) or slave output (during slave mode) pin MISO of the serial peripheral interface 2 (SPI2). It can be configured as the receive pin RXD of serial communication interface 4 (SCI4).

1.2.3.29 PH3 / KWH3 / $\overline{SS1}$ — Port H I/O Pin 3

PH3 is a general-purpose input or output pin. It can be configured to generate an interrupt causing the MCU to exit stop or wait mode. It can be configured as slave select pin $\overline{SS}$ of the serial peripheral interface 1 (SPI1).

1.2.3.30 PH2 / KWH2 / SCK1 — Port H I/O Pin 2

PH2 is a general-purpose input or output pin. It can be configured to generate an interrupt causing the MCU to exit stop or wait mode. It can be configured as serial clock pin SCK of the serial peripheral interface 1 (SPI1).

1.2.3.31 PH1 / KWH1 / MOSI1 — Port H I/O Pin 1

PH1 is a general-purpose input or output pin. It can be configured to generate an interrupt causing the MCU to exit stop or wait mode. It can be configured as master output (during master mode) or slave input pin (during slave mode) MOSI of the serial peripheral interface 1 (SPI1).

1.2.3.32 PH0 / KWH0 / MISO1 — Port H I/O Pin 0

PH0 is a general-purpose input or output pin. It can be configured to generate an interrupt causing the MCU to exit stop or wait mode. It can be configured as master input (during master mode) or slave output (during slave mode) pin MISO of the serial peripheral interface 1 (SPI1).

1.2.3.33 PJ7 / KWJ7 / TXCAN4 / SCL0 / TXCAN0— PORT J I/O Pin 7

PJ7 is a general-purpose input or output pin. It can be configured to generate an interrupt causing the MCU to exit stop or wait mode. It can be configured as the transmit pin TXCAN for the scalable controller area network controller 0 or 4 (CAN0 or CAN4) or as the serial clock pin SCL of the IIC0 module.

1.2.3.34 PJ6 / KWJ6 / RXCAN4 / SDA0 / RXCAN0 — PORT J I/O Pin 6

PJ6 is a general-purpose input or output pin. It can be configured to generate an interrupt causing the MCU to exit stop or wait mode. It can be configured as the receive pin RXCAN for the scalable controller area network controller 0 or 4 (CAN0 or CAN4) or as the serial data pin SDA of the IIC0 module.

1.2.3.35 PJ5 / KWJ5 / SCL1 / $\overline{\text{CS2}}$ — PORT J I/O Pin 5

PJ5 is a general-purpose input or output pin. It can be configured to generate an interrupt causing the MCU to exit stop or wait mode. It can be configured as the serial clock pin SCL of the IIC1 module. It can be configured to provide a chip-select output.

1.2.3.36 PJ4 / KWJ4 / SDA1 / $\overline{\text{CS0}}$ — PORT J I/O Pin 4

PJ4 is a general-purpose input or output pin. It can be configured to generate an interrupt causing the MCU to exit stop or wait mode. It can be configured as the serial data pin SDA of the IIC1 module. It can be configured to provide a chip-select output.

1.2.3.37 PJ2 / KWJ2 / $\overline{\text{CS1}}$ — PORT J I/O Pin 2

PJ2 is a general-purpose input or output pins. It can be configured to generate an interrupt causing the MCU to exit stop or wait mode. It can be configured to provide a chip-select output.

1.2.3.38 PJ1 / KWJ1 / TXD2 — PORT J I/O Pin 1

PJ1 is a general-purpose input or output pin. It can be configured to generate an interrupt causing the MCU to exit stop or wait mode. It can be configured as the transmit pin TXD of the serial communication interface 2 (SCI2).

1.2.3.39 PJ0 / KWJ0 / RXD2 / $\overline{\text{CS3}}$ — PORT J I/O Pin 0

PJ0 is a general-purpose input or output pin. It can be configured to generate an interrupt causing the MCU to exit stop or wait mode. It can be configured as the receive pin RXD of the serial communication interface 2 (SCI2).It can be configured to provide a chip-select output.

1.2.3.40 PK7 / $\overline{\text{EWAIT}}$ / ROMCTL — Port K I/O Pin 7

PK7 is a general-purpose input or output pin. During MCU emulation modes and normal expanded modes of operation, this pin is used to enable the Flash EEPROM memory in the memory map (ROMCTL). At the rising edge of $\overline{\text{RESET}}$, the state of this pin is latched to the ROMON bit. The $\overline{\text{EWAIT}}$ input signal maintains the external bus access until the external device is ready to capture data (write) or provide data (read).

The input voltage threshold for PK7 can be configured to reduced levels, to allow data from an external 3.3-V peripheral to be read by the MCU operating at 5.0 V. The input voltage threshold for PK7 is configured to reduced levels out of reset in expanded and emulation modes.

1.2.3.41 PK[6:4] / ADDR[22:20] / ACC[2:0] — Port K I/O Pin [6:4]

PK[6:4] are general-purpose input or output pins. During MCU expanded modes of operation, the ACC[2:0] signals are used to indicate the access source of the bus cycle. This pins also provide the expanded addresses ADDR[22:20] for the external bus. In Emulation modes ACC[2:0] is available and is time multiplexed with the high addresses

1.2.3.42 PK[3:0] / ADDR[19:16] / IQSTAT[3:0] — Port K I/O Pins [3:0]

PK3-PK0 are general-purpose input or output pins. In MCU expanded modes of operation, these pins provide the expanded address ADDR[19:16] for the external bus and carry instruction pipe information.

1.2.3.43 PK7,PK[5:0] — Port K I/O Pins 7 & [5:0]

PK7 and PK[5:0] are general-purpose input or output pins.

1.2.3.44 PM7 / TXCAN3 / TXCAN4 / TXD3 — Port M I/O Pin 7

PM7 is a general-purpose input or output pin. It can be configured as the transmit pin TXCAN of the scalable controller area network controller 3 or 4 (CAN3 or CAN4). PM7 can be configured as the transmit pin TXD3 of the serial communication interface 3 (SCI3).

1.2.3.45 PM6 / RXCAN3 / RXCAN4 / RXD3 — Port M I/O Pin 6

PM6 is a general-purpose input or output pin. It can be configured as the receive pin RXCAN of the scalable controller area network controller 3 or 4 (CAN3 or CAN4). PM6 can be configured as the receive pin RXD3 of the serial communication interface 3 (SCI3).

1.2.3.46 PM5 / TXCAN0 / TXCAN2 / TXCAN4 / SCK0 — Port M I/O Pin 5

PM5 is a general-purpose input or output pin. It can be configured as the transmit pin TXCAN of the scalable controller area network controllers 0, 2 or 4 (CAN0, CAN2, or CAN4). It can be configured as the serial clock pin SCK of the serial peripheral interface 0 (SPI0).

1.2.3.47 PM4 / RXCAN0 / RXCAN2 / RXCAN4 / MOSI0 — Port M I/O Pin 4

PM4 is a general-purpose input or output pin. It can be configured as the receive pin RXCAN of the scalable controller area network controllers 0, 2, or 4 (CAN0, CAN2, or CAN4). It can be configured as the master output (during master mode) or slave input pin (during slave mode) MOSI for the serial peripheral interface 0 (SPI0).

1.2.3.48 PM3 / TXCAN1 / TXCAN0 / $\overline{\text{SS0}}$ — Port M I/O Pin 3

PM3 is a general-purpose input or output pin. It can be configured as the transmit pin TXCAN of the scalable controller area network controllers 1 or 0 (CAN1 or CAN0). It can be configured as the slave select pin $\overline{\text{SS}}$ of the serial peripheral interface 0 (SPI0).

1.2.3.49 PM2 / RXCAN1 / RXCAN0 / MISO0 — Port M I/O Pin 2

PM2 is a general-purpose input or output pin. It can be configured as the receive pin RXCAN of the scalable controller area network controllers 1 or 0 (CAN1 or CAN0). It can be configured as the master input (during master mode) or slave output pin (during slave mode) MISO for the serial peripheral interface 0 (SPI0).

1.2.3.50 PM1 / TXCAN0 — Port M I/O Pin 1

PM1 is a general-purpose input or output pin. It can be configured as the transmit pin TXCAN of the scalable controller area network controller 0 (CAN0).

1.2.3.51 PM0 / RXCAN0 — Port M I/O Pin 0

PM0 is a general-purpose input or output pin. It can be configured as the receive pin RXCAN of the scalable controller area network controller 0 (CAN0).

1.2.3.52 PP7 / KWP7 / PWM7 / SCK2 — Port P I/O Pin 7

PP7 is a general-purpose input or output pin. It can be configured to generate an interrupt causing the MCU to exit stop or wait mode. It can be configured as pulse width modulator (PWM) channel 7 output. It can be configured as serial clock pin SCK of the serial peripheral interface 2 (SPI2).

1.2.3.53 PP6 / KWP6 / PWM6 / $\overline{\text{SS2}}$ — Port P I/O Pin 6

PP6 is a general-purpose input or output pin. It can be configured to generate an interrupt causing the MCU to exit stop or wait mode. It can be configured as pulse width modulator (PWM) channel 6 output. It can be configured as slave select pin $\overline{\text{SS}}$ of the serial peripheral interface 2 (SPI2).

1.2.3.54 PP5 / KWP5 / PWM5 / MOSI2 — Port P I/O Pin 5

PP5 is a general-purpose input or output pin. It can be configured to generate an interrupt causing the MCU to exit stop or wait mode. It can be configured as pulse width modulator (PWM) channel 5 output. It can

be configured as master output (during master mode) or slave input pin (during slave mode) MOSI of the serial peripheral interface 2 (SPI2).

1.2.3.55 PP4 / KWP4 / PWM4 / MISO2 — Port P I/O Pin 4

PP4 is a general-purpose input or output pin. It can be configured to generate an interrupt causing the MCU to exit stop or wait mode. It can be configured as pulse width modulator (PWM) channel 4 output. It can be configured as master input (during master mode) or slave output (during slave mode) pin MISO of the serial peripheral interface 2 (SPI2).

1.2.3.56 PP3 / KWP3 / PWM3 / $\overline{\text{SS1}}$ — Port P I/O Pin 3

PP3 is a general-purpose input or output pin. It can be configured to generate an interrupt causing the MCU to exit stop or wait mode. It can be configured as pulse width modulator (PWM) channel 3 output. It can be configured as slave select pin $\overline{\text{SS}}$ of the serial peripheral interface 1 (SPI1).

1.2.3.57 PP2 / KWP2 / PWM2 / SCK1 — Port P I/O Pin 2

PP2 is a general-purpose input or output pin. It can be configured to generate an interrupt causing the MCU to exit stop or wait mode. It can be configured as pulse width modulator (PWM) channel 2 output. It can be configured as serial clock pin SCK of the serial peripheral interface 1 (SPI1).

1.2.3.58 PP1 / KWP1 / PWM1 / MOSI1 — Port P I/O Pin 1

PP1 is a general-purpose input or output pin. It can be configured to generate an interrupt causing the MCU to exit stop or wait mode. It can be configured as pulse width modulator (PWM) channel 1 output. It can be configured as master output (during master mode) or slave input pin (during slave mode) MOSI of the serial peripheral interface 1 (SPI1).

1.2.3.59 PP0 / KWP0 / PWM0 / MISO1 — Port P I/O Pin 0

PP0 is a general-purpose input or output pin. It can be configured to generate an interrupt causing the MCU to exit stop or wait mode. It can be configured as pulse width modulator (PWM) channel 0 output. It can be configured as master input (during master mode) or slave output (during slave mode) pin MISO of the serial peripheral interface 1 (SPI1).

1.2.3.60 PS7 / $\overline{\text{SS0}}$ — Port S I/O Pin 7

PS7 is a general-purpose input or output pin. It can be configured as the slave select pin $\overline{\text{SS}}$ of the serial peripheral interface 0 (SPI0).

1.2.3.61 PS6 / SCK0 — Port S I/O Pin 6

PS6 is a general-purpose input or output pin. It can be configured as the serial clock pin SCK of the serial peripheral interface 0 (SPI0).

1.2.3.62 PS5 / MOSI0 — Port S I/O Pin 5

PS5 is a general-purpose input or output pin. It can be configured as master output (during master mode) or slave input pin (during slave mode) MOSI of the serial peripheral interface 0 (SPI0).

1.2.3.63 PS4 / MISO0 — Port S I/O Pin 4

PS4 is a general-purpose input or output pin. It can be configured as master input (during master mode) or slave output pin (during slave mode) MOSI of the serial peripheral interface 0 (SPI0).

1.2.3.64 PS3 / TXD1 — Port S I/O Pin 3

PS3 is a general-purpose input or output pin. It can be configured as the transmit pin TXD of serial communication interface 1 (SCI1).

1.2.3.65 PS2 / RXD1 — Port S I/O Pin 2

PS2 is a general-purpose input or output pin. It can be configured as the receive pin RXD of serial communication interface 1 (SCI1).

1.2.3.66 PS1 / TXD0 — Port S I/O Pin 1

PS1 is a general-purpose input or output pin. It can be configured as the transmit pin TXD of serial communication interface 0 (SCI0).

1.2.3.67 PS0 / RXD0 — Port S I/O Pin 0

PS0 is a general-purpose input or output pin. It can be configured as the receive pin RXD of serial communication interface 0 (SCI0).

1.2.3.68 PT[7:0] / IOC[7:0] — Port T I/O Pins [7:0]

PT[7:0] are general-purpose input or output pins. They can be configured as input capture or output compare pins IOC[7:0] of the enhanced capture timer (ECT).

1.2.4 Power Supply Pins

MC9S12XDP512 power and ground pins are described below.

NOTE

All V_{SS} pins must be connected together in the application.

1.2.4.1 V_{DDX1}, V_{DDX2}, V_{SSX1},V_{SSX2} — Power and Ground Pins for I/O Drivers

External power and ground for I/O drivers. Because fast signal transitions place high, short-duration current demands on the power supply, use bypass capacitors with high-frequency characteristics and place them as close to the MCU as possible. Bypass requirements depend on how heavily the MCU pins are loaded.

1.2.4.2 V_{DDR1}, V_{DDR2}, V_{SSR1}, V_{SSR2} — Power and Ground Pins for I/O Drivers and for Internal Voltage Regulator

External power and ground for I/O drivers and input to the internal voltage regulator. Because fast signal transitions place high, short-duration current demands on the power supply, use bypass capacitors with high-frequency characteristics and place them as close to the MCU as possible. Bypass requirements depend on how heavily the MCU pins are loaded.

1.2.4.3 V_{DD1}, V_{DD2}, V_{SS1}, V_{SS2} — Core Power Pins

Power is supplied to the MCU through V_{DD} and V_{SS}. Because fast signal transitions place high, short-duration current demands on the power supply, use bypass capacitors with high-frequency characteristics and place them as close to the MCU as possible. This 2.5-V supply is derived from the internal voltage regulator. There is no static load on those pins allowed. The internal voltage regulator is turned off, if V_{REGEN} is tied to ground.

NOTE

No load allowed except for bypass capacitors.

1.2.4.4 V_{DDA}, V_{SSA} — Power Supply Pins for ATD and V_{REG}

V_{DDA}, V_{SSA} are the power supply and ground input pins for the voltage regulator and the analog-to-digital converters.

1.2.4.5 V_{RH}, V_{RL} — ATD Reference Voltage Input Pins

V_{RH} and V_{RL} are the reference voltage input pins for the analog-to-digital converter.

1.2.4.6 V_{DDPLL}, V_{SSPLL} — Power Supply Pins for PLL

Provides operating voltage and ground for the oscillator and the phased-locked loop. This allows the supply voltage to the oscillator and PLL to be bypassed independently. This 2.5-V voltage is generated by the internal voltage regulator.

NOTE

No load allowed except for bypass capacitors.

Table 1-8. MC9S12XD Family Power and Ground Connection Summary

Mnemonic	Pin Number			Nominal Voltage	Description
	144-Pin LQFP	112-Pin LQFP	80-Pin QFP		
$V_{DD1, 2}$	15, 87	13, 65	9, 49	2.5 V	Internal power and ground generated by internal regulator
$V_{SS1, 2}$	16, 88	14, 66	10, 50	0V	
V_{DDR1}	53	41	29	5.0 V	External power and ground, supply to pin drivers and internal voltage regulator
V_{SSR1}	52	40	28	0 V	
V_{DDX1}	139	107	77	5.0 V	External power and ground, supply to pin drivers
V_{SSX1}	138	106	76	0 V	
V_{DDX2}	26	N.A.	N.A.	5.0 V	External power and ground, supply to pin drivers
V_{SSX2}	27	N.A.	N.A.	0 V	
V_{DDR2}	82	N.A.	N.A.	5.0 V	External power and ground, supply to pin drivers
V_{SSR2}	81	N.A.	N.A.	0 V	
V_{DDA}	107	83	59	5.0 V	Operating voltage and ground for the analog-to-digital converters and the reference for the internal voltage regulator, allows the supply voltage to the A/D to be bypassed independently.
V_{SSA}	110	86	62	0 V	
V_{RL}	109	85	61	0 V	Reference voltages for the analog-to-digital converter.
V_{RH}	108	84	60	5.0 V	
V_{DDPLL}	55	43	31	2.5 V	Provides operating voltage and ground for the phased-locked loop. This allows the supply voltage to the PLL to be bypassed independently. Internal power and ground generated by internal regulator.
V_{SSPLL}	57	45	33	0 V	

1.3 System Clock Description

The clock and reset generator module (CRG) provides the internal clock signals for the core and all peripheral modules. Figure 1-12 shows the clock connections from the CRG to all modules.

See 79Chapterf or details on clock generation.

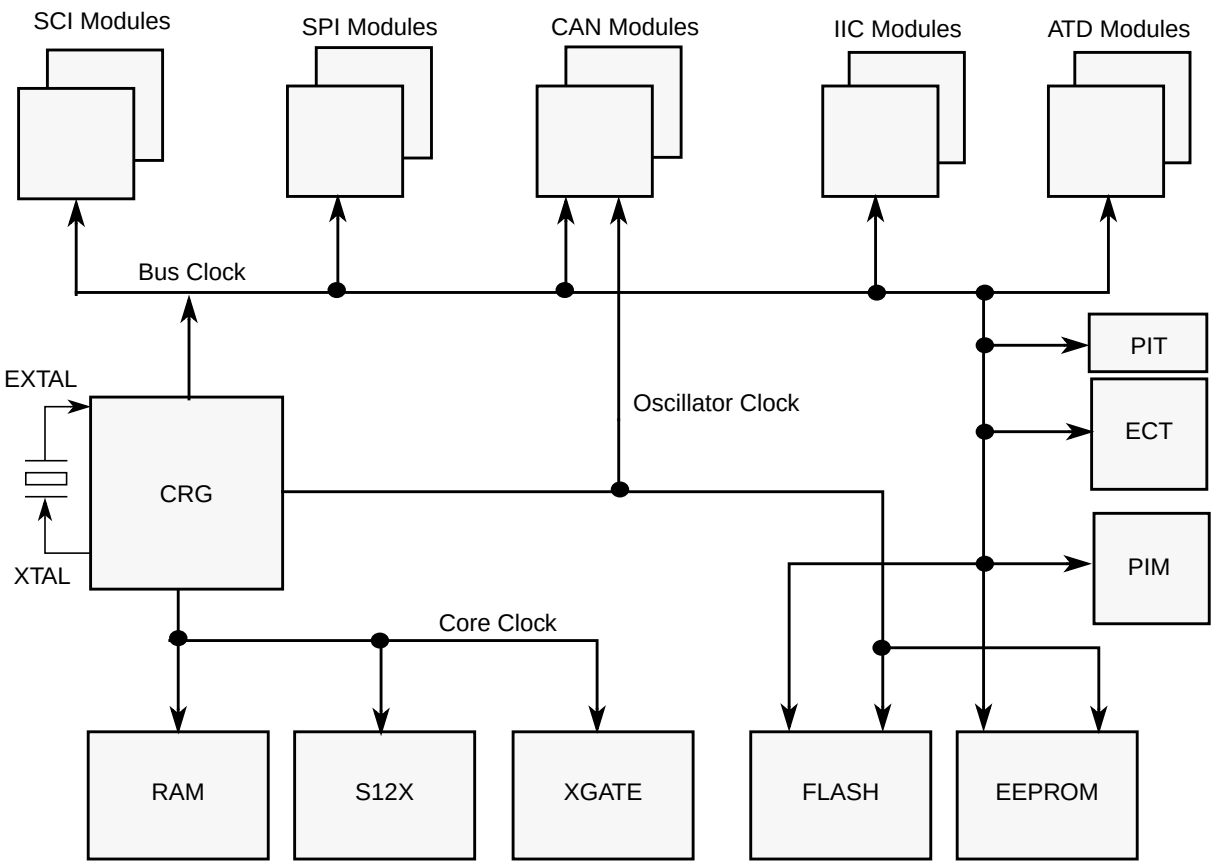

Figure 1-14. MC9S12XD Family Clock Connections

The MCU's system clock can be supplied in several ways enabling a range of system operating frequencies to be supported:

- The on-chip phase locked loop (PLL)
- the PLL self clocking
- the oscillator

The clock generated by the PLL or oscillator provides the main system clock frequencies core clock and bus clock. As shown in Figure 1-12, this system clocks are used throughout the MCU to drive the core, the memories, and the peripherals.

The program Flash memory and the EEPROM are supplied by the bus clock and the oscillator clock.The oscillator clock is used as a time base to derive the program and erase times for the NVM's. See the Flash and EEPROM section for more details on the operation of the NVM's.

The CAN modules may be configured to have their clock sources derived either from the bus clock or directly from the oscillator clock. This allows the user to select its clock based on the required jitter performance. Consult MSCAN block description for more details on the operation and configuration of the CAN blocks.

In order to ensure the presence of the clock the MCU includes an on-chip clock monitor connected to the output of the oscillator. The clock monitor can be configured to invoke the PLL self-clocking mode or to generate a system reset if it is allowed to time out as a result of no oscillator clock being present.

In addition to the clock monitor, the MCU also provides a clock quality checker which performs a more accurate check of the clock. The clock quality checker counts a predetermined number of clock edges within a defined time window to insure that the clock is running. The checker can be invoked following specific events such as on wake-up or clock monitor failure.

1.4 Chip Configuration Summary

CAUTION

Emulation single chip mode, Normal expanded mode, Emulation expanded mode and ROMCTL/EROMCTL functionality is only available on parts with external bus interface in 144 LQFP package. see Appendix E Derivative Differences.

The MCU can operate in six different modes. The different modes, the state of ROMCTL and EROMCTL signal on rising edge of $\overline{\text{RESET}}$, and the security state of the MCU affects the following device characteristics:

- External bus interface configuration
- Flash in memory map, or not
- Debug features enabled or disabled

The operating mode out of reset is determined by the states of the MODC, MODB, and MODA signals during reset (see Table 1-9). The MODC, MODB, and MODA bits in the MODE register show the current operating mode and provide limited mode switching during operation. The states of the MODC, MODB, and MODA signals are latched into these bits on the rising edge of $\overline{\text{RESET}}$.

In normal expanded mode and in emulation modes the ROMON bit and the EROMON bit in the MMCCTL1 register defines if the on chip flash memory is the memory map, or not. (See Table 1-9.) For a detailed description of the ROMON and EROMON bits refer to the S12X_MMC section.

The state of the ROMCTL signal is latched into the ROMON bit in the MMCCTL1 register on the rising edge of $\overline{\text{RESET}}$. The state of the EROMCTL signal is latched into the EROMON bit in the MISC register on the rising edge of $\overline{\text{RESET}}$.

The MCU can operate in two different modes. The operating mode out of reset is determined by the state of the MODC signal during reset. The MODC bit in the MODE register shows the current operating mode and provide limited mode switching during operation. The state of the MODC signal is latched into this bit on the rising edge of $\overline{\text{RESET}}$.

Table 1-9. Chip Modes and Data Sources

Chip Modes	BKGD = MODC	PE6 = MODB	PE5 = MODA	PK7 = ROMCTL	PE3 = EROMCTL	Data Source[1]
Normal single chip	1	0	0	X	X	Internal
Special single chip	0	0	0			
Emulation single chip	0	0	1	X	0	Emulation memory
				X	1	Internal Flash
Normal expanded	1	0	1	0	X	External application
				1	X	Internal Flash
Emulation expanded	0	1	1	0	X	External application
				1	0	Emulation memory
				1	1	Internal Flash
Special test	0	1	0	0	X	External application
				1	X	Internal Flash

[1] Internal means resources inside the MCU are read/written.
Internal Flash means Flash resources inside the MCU are read/written.
Emulation memory means resources inside the emulator are read/written (PRU registers, Flash replacement, RAM, EEPROM, and register space are always considered internal).
External application means resources residing outside the MCU are read/written.

The configuration of the oscillator can be selected using the $\overline{XCLKS}$ signal (see Table 1-10). For a detailed description please refer to the S12CRG section.

Table 1-10. Clock Selection Based on PE7

PE7 = $\overline{XCLKS}$	Description
0	Full swing Pierce oscillator or external clock source selected
1	Loop controlled Pierce oscillator selected

The logic level on the voltage regulator enable pin V_{REGEN} determines whether the on-chip voltage regulator is enabled or disabled (see Table 1-11).

Table 1-11. Voltage Regulator VREGEN

V_{REGEN}	Description
1	Internal voltage regulator enabled
0	Internal voltage regulator disabled, $V_{DD1,2}$ and V_{DDPLL} must be supplied externally

1.5 Modes of Operation

1.5.1 User Modes

1.5.1.1 Normal Expanded Mode

Ports K, A, and B are configured as a 23-bit address bus, ports C and D are configured as a 16-bit data bus, and port E provides bus control and status signals. This mode allows 16-bit external memory and peripheral devices to be interfaced to the system. The fastest external bus rate is divide by 2 from the internal bus rate.

1.5.1.2 Normal Single-Chip Mode

There is no external bus in this mode. The processor program is executed from internal memory. Ports A, B,C,D, K, and most pins of port E are available as general-purpose I/O.

1.5.1.3 Special Single-Chip Mode

This mode is used for debugging single-chip operation, boot-strapping, or security related operations. The background debug module BDM is active in this mode. The CPU executes a monitor program located in an on-chip ROM. BDM firmware is waiting for additional serial commands through the BKGD pin. There is no external bus after reset in this mode.

1.5.1.4 Emulation of Expanded Mode

Developers use this mode for emulation systems in which the users target application is normal expanded mode. Code is executed from external memory or from internal memory depending on the state of ROMON and EROMON bit. In this mode the internal operation is visible on external bus interface.

1.5.1.5 Emulation of Single-Chip Mode

Developers use this mode for emulation systems in which the user's target application is normal single-chip mode. Code is executed from external memory or from internal memory depending on the state of ROMON and EROMON bit. In this mode the internal operation is visible on external bus interface.

1.5.1.6 Special Test Mode

Freescale internal use only.

1.5.2 Low-Power Modes

The microcontroller features two main low-power modes. Consult the respective sections for information on the module behavior in system stop, system pseudo stop, and system wait mode. An important source of information about the clock system is the Clock and Reset Generator S12CRG section.

1.5.2.1 System Stop Modes

The system stop modes are entered if the CPU executes the STOP instruction and the XGATE doesn't execute a thread and the XGFACT bit in the XGMCTL register is cleared. Depending on the state of the PSTP bit in the CLKSEL register the MCU goes into pseudo stop mode or full stop mode. Please refer to CRG section. Asserting $\overline{\text{RESET}}$, $\overline{\text{XIRQ}}$, $\overline{\text{IRQ}}$ or any other interrupt ends the system stop modes.

1.5.2.2 Pseudo Stop Mode

In this mode the clocks are stopped but the oscillator is still running and the real time interrupt (RTI) or watchdog (COP) submodule can stay active. Other peripherals are turned off. This mode consumes more current than the system stop mode, but the wake up time from this mode is significantly shorter.

1.5.2.3 Full Stop Mode

The oscillator is stopped in this mode. All clocks are switched off. All counters and dividers remain frozen.

1.5.2.4 System Wait Mode

This mode is entered when the CPU executes the WAI instruction. In this mode the CPU will not execute instructions. The internal CPU clock is switched off. All peripherals and the XGATE can be active in system wait mode. For further power consumption the peripherals can individually turn off their local clocks. Asserting $\overline{\text{RESET}}$, $\overline{\text{XIRQ}}$, $\overline{\text{IRQ}}$ or any other interrupt that has not been masked ends system wait mode.

1.5.3 Freeze Mode

The enhanced capture timer, pulse width modulator, analog-to-digital converters, the periodic interrupt timer and the XGATE module provide a software programmable option to freeze the module status during the background debug module is active. This is useful when debugging application software. For detailed description of the behavior of the ATD0, ATD1, ECT, PWM, XGATE and PIT when the background debug module is active consult the corresponding sections..

1.6 Resets and Interrupts

Consult the S12XCPU Block Guide for information on exception processing.

1.6.1 Vectors

Table 1-12 lists all interrupt sources and vectors in the default order of priority. The interrupt module (S12XINT) provides an interrupt vector base register (IVBR) to relocate the vectors. Associated with each I-bit maskable service request is a configuration register. It selects if the service request is enabled, the service request priority level and whether the service request is handled either by the S12X CPU or by the XGATE module.

Table 1-12. Interrupt Vector Locations (Sheet 1 of 3)

Vector Address[1]	XGATE Channel ID[2]	Interrupt Source	CCR Mask	Local Enable
$FFFE	—	System reset or illegal access reset	None	None
$FFFC	—	Clock monitor reset	None	PLLCTL (CME, SCME)
$FFFA	—	COP watchdog reset	None	COP rate select
Vector base + $F8	—	Unimplemented instruction trap	None	None
Vector base+ $F6	—	SWI	None	None
Vector base+ $F4	—	$\overline{XIRQ}$	X Bit	None
Vector base+ $F2	—	$\overline{IRQ}$	I bit	IRQCR (IRQEN)
Vector base+ $F0	$78	Real time interrupt	I bit	CRGINT (RTIE)
Vector base+ $EE	$77	Enhanced capture timer channel 0	I bit	TIE (C0I)
Vector base + $EC	$76	Enhanced capture timer channel 1	I bit	TIE (C1I)
Vector base+ $EA	$75	Enhanced capture timer channel 2	I bit	TIE (C2I)
Vector base+ $E8	$74	Enhanced capture timer channel 3	I bit	TIE (C3I)
Vector base+ $E6	$73	Enhanced capture timer channel 4	I bit	TIE (C4I)
Vector base+ $E4	$72	Enhanced capture timer channel 5	I bit	TIE (C5I)
Vector base + $E2	$71	Enhanced capture timer channel 6	I bit	TIE (C6I)
Vector base+ $E0	$70	Enhanced capture timer channel 7	I bit	TIE (C7I)
Vector base+ $DE	$6F	Enhanced capture timer overflow	I bit	TSRC2 (TOF)
Vector base+ $DC	$6E	Pulse accumulator A overflow	I bit	PACTL (PAOVI)
Vector base + $DA	$6D	Pulse accumulator input edge	I bit	PACTL (PAI)
Vector base + $D8	$6C	SPI0	I bit	SPI0CR1 (SPIE, SPTIE)
Vector base+ $D6	$6B	SCI0	I bit	SCI0CR2 (TIE, TCIE, RIE, ILIE)
Vector base + $D4	$6A	SCI1	I bit	SCI1CR2 (TIE, TCIE, RIE, ILIE)
Vector base + $D2	$69	ATD0	I bit	ATD0CTL2 (ASCIE)
Vector base + $D2	Reserved			
Vector base + $D0	$68	ATD1	I bit	ATD1CTL2 (ASCIE)
Vector base + $CE	$67	Port J	I bit	PIEJ (PIEJ7-PIEJ0)
Vector base + $CC	$66	Port H	I bit	PIEH (PIEH7-PIEH0)
Vector base + $CA	$65	Modulus down counter underflow	I bit	MCCTL(MCZI)
Vector base + $C8	$64	Pulse accumulator B overflow	I bit	PBCTL(PBOVI)
Vector base + $C6	$63	CRG PLL lock	I bit	CRGINT(LOCKIE)
Vector base + $C4	$62	CRG self-clock mode	I bit	CRGINT (SCMIE)
Vector base + $C2	Reserved			
Vector base + $C0	$60	IIC0 bus	I bit	IBCR0 (IBIE)

Table 1-12. Interrupt Vector Locations (Sheet 2 of 3)

Vector Address[1]	XGATE Channel ID[2]	Interrupt Source	CCR Mask	Local Enable
Vector base + $BE	$5F	SPI1	I bit	SPI1CR1 (SPIE, SPTIE)
Vector base + $BC	$5E	SPI2	I bit	SPI2CR1 (SPIE, SPTIE)
Vector base + $BC	RESERVED			
Vector base + $BA	$5D	EEPROM	I bit	ECNFG (CCIE, CBEIE)
Vector base + $B8	$5C	FLASH	I bit	FCNFG (CCIE, CBEIE)
Vector base + $B6	$5B	CAN0 wake-up	I bit	CAN0RIER (WUPIE)
Vector base + $B4	$5A	CAN0 errors	I bit	CAN0RIER (CSCIE, OVRIE)
Vector base + $B2	$59	CAN0 receive	I bit	CAN0RIER (RXFIE)
Vector base + $B0	$58	CAN0 transmit	I bit	CAN0TIER (TXEIE[2:0])
Vector base + $AE	$57	CAN1 wake-up	I bit	CAN1RIER (WUPIE)
Vector base + $AC	$56	CAN1 errors	I bit	CAN1RIER (CSCIE, OVRIE)
Vector base + $AA	$55	CAN1 receive	I bit	CAN1RIER (RXFIE)
Vector base + $A8	$54	CAN1 transmit	I bit	CAN1TIER (TXEIE[2:0])
Vector base + $A6	$53	CAN2 wake-up	I bit	CAN2RIER (WUPIE)
Vector base + $A4	$52	CAN2 errors	I bit	CAN2RIER (CSCIE, OVRIE)
Vector base + $A2	$51	CAN2 receive	I bit	CAN2RIER (RXFIE)
Vector base + $A0	$50	CAN2 transmit	I bit	CAN2TIER (TXEIE[2:0])
Vector base + $9E	$4F	CAN3 wake-up	I bit	CAN3RIER (WUPIE)
Vector base+ $9C	$4E	CAN3 errors	I bit	CAN3RIER (CSCIE, OVRIE)
Vector base+ $9A	$4D	CAN3 receive	I bit	CAN3RIER (RXFIE)
Vector base + $98	$4C	CAN3 transmit	I bit	CAN3TIER (TXEIE[2:0])
Vector base + $AE to Vector base + 98	Reserved			
Vector base + $9E to Vector base + 98	Reserved			
Vector base + $96	$4B	CAN4 wake-up	I bit	CAN4RIER (WUPIE)
Vector base + $94	$4A	CAN4 errors	I bit	CAN4RIER (CSCIE, OVRIE)
Vector base + $92	$49	CAN4 receive	I bit	CAN4RIER (RXFIE)
Vector base + $90	$48	CAN4 transmit	I bit	CAN4TIER (TXEIE[2:0])
Vector base + $8E	$47	Port P Interrupt	I bit	PIEP (PIEP7-PIEP0)
Vector base+ $8C	$46	PWM emergency shutdown	I bit	PWMSDN (PWMIE)
Vector base + $8A	$45	SCI2	I bit	SCI2CR2 (TIE, TCIE, RIE, ILIE)

Table 1-12. Interrupt Vector Locations (Sheet 3 of 3)

Vector Address[1]	XGATE Channel ID[2]	Interrupt Source	CCR Mask	Local Enable
Vector base + $88	$44	SCI3	I bit	SCI3CR2 (TIE, TCIE, RIE, ILIE)
Vector base + $8A to Vector base + $88	Reserved			
Vector base + $86	$43	SCI4	I bit	SCI4CR2 (TIE, TCIE, RIE, ILIE)
Vector base + $84	$42	SCI5	I bit	SCI5CR2 (TIE, TCIE, RIE, ILIE)
Vector base + $86 to Vector base + $84	Reserved			
Vector base + $82	$41	IIC1 Bus	I bit	IBCR (IBIE)
Vector base + $82	Reserved			
Vector base + $80	$40	Low-voltage interrupt (LVI)	I bit	VREGCTRL (LVIE)
Vector base + $7E	$3F	Autonomous periodical interrupt (API)	I bit	VREGAPICTRL (APIE)
Vector base + $7C	Reserved			
Vector base + $7A	$3D	Periodic interrupt timer channel 0	I bit	PITINTE (PINTE0)
Vector base + $78	$3C	Periodic interrupt timer channel 1	I bit	PITINTE (PINTE1)
Vector base + $76	$3B	Periodic interrupt timer channel 2	I bit	PITINTE (PINTE2)
Vector base + $74	$3A	Periodic interrupt timer channel 3	I bit	PITINTE (PINTE3)
Vector base + $72	$39	XGATE software trigger 0	I bit	XGMCTL (XGIE)
Vector base + $70	$38	XGATE software trigger 1	I bit	XGMCTL (XGIE)
Vector base + $6E	$37	XGATE software trigger 2	I bit	XGMCTL (XGIE)
Vector base + $6C	$36	XGATE software trigger 3	I bit	XGMCTL (XGIE)
Vector base + $6A	$35	XGATE software trigger 4	I bit	XGMCTL (XGIE)
Vector base + $68	$34	XGATE software trigger 5	I bit	XGMCTL (XGIE)
Vector base + $66	$33	XGATE software trigger 6	I bit	XGMCTL (XGIE)
Vector base + $64	$32	XGATE software trigger 7	I bit	XGMCTL (XGIE)
Vector base + $62	—	XGATE software error interrupt	I bit	XGMCTL (XGIE)
Vector base + $60	—	S12XCPU RAM access violation	I bit	RAMWPC (AVIE)
Vector base+ $12 to Vector base + $5E	Reserved			
Vector base + $10	—	Spurious interrupt	—	None

1 16 bits vector address based

2 For detailed description of XGATE channel ID refer to XGATE Block Guide

1.6.2 Effects of Reset

When a reset occurs, MCU registers and control bits are changed to known start-up states. Refer to the respective module Block Guides for register reset states.

1.6.2.1 I/O Pins

Refer to the PIM Block Guide for reset configurations of all peripheral module ports.

1.6.2.2 Memory

The RAM array is not initialized out of reset.

1.7 COP Configuration

The COP timeout rate bits CR[2:0] and the WCOP bit in the COPCTL register are loaded on rising edge of $\overline{\text{RESET}}$ from the Flash control register FCTL ($0107) located in the Flash EEPROM block. See Table 1-13 and Table 1-14 for coding. The FCTL register is loaded from the Flash configuration field byte at global address $7FFF0E during the reset sequence

NOTE

If the MCU is secured the COP timeout rate is always set to the longest period (CR[2:0] = 111) after COP reset.

Table 1-13. Initial COP Rate Configuration

NV[2:0] in FCTL Register	CR[2:0] in COPCTL Register
000	111
001	110
010	101
011	100
100	011
101	010
110	001
111	000

Table 1-14. Initial WCOP Configuration

NV[3] in FCTL Register	WCOP in COPCTL Register
1	0
0	1

1.8 ATD0 External Trigger Input Connection

The ATD_10B8C module includes four external trigger inputs ETRIG0, ETRIG1, ETRIG, and ETRIG3. The external trigger allows the user to synchronize ATD conversion to external trigger events. Table 1-15 shows the connection of the external trigger inputs on MC9S12XDP512.

Table 1-15. ATD0 External Trigger Sources

External Trigger Input	Connected to . .
ETRIG0	Pulse width modulator channel 1
ETRIG1	Pulse width modulator channel 3
ETRIG2	Periodic interrupt timer hardware trigger0 PITTRIG[0].
ETRIG3	Periodic interrupt timer hardware trigger1 PITTRIG[1].

See Section Chapter 5, “Analog-to-Digital Converter (S12ATD10B8CV3) for information about the analog-to-digital converter module. When this section refers to freeze mode this is equivalent to active BDM mode.

1.9 ATD1 External Trigger Input Connection

The ATD_10B16C module includes four external trigger inputs ETRIG0, ETRIG1, ETRIG, and ETRIG3. The external trigger feature allows the user to synchronize ATD conversion to external trigger events. Table 1-16 shows the connection of the external trigger inputs on MC9S12XDP512.

Table 1-16. ATD1 External Trigger Sources

External Trigger Input	Connected to . .
ETRIG0	Pulse width modulator channel 1
ETRIG1	Pulse width modulator channel 3
ETRIG2	Periodic interrupt timer hardware trigger0 PITTRIG[0].
ETRIG3	Periodic interrupt timer hardware trigger1 PITTRIG[1].

See Section Chapter 4, “Analog-to-Digital Converter (ATD10B16CV4) Block Description for information about the analog-to-digital converter module. When this section refers to freeze mode this is equivalent to active BDM mode.

Chapter 2
Clocks and Reset Generator (S12CRGV6)

2.1 Introduction

This specification describes the function of the clocks and reset generator (CRG).

2.1.1 Features

The main features of this block are:

- Phase locked loop (PLL) frequency multiplier
  - Reference divider
  - Automatic bandwidth control mode for low-jitter operation
  - Automatic frequency lock detector
  - Interrupt request on entry or exit from locked condition
  - Self clock mode in absence of reference clock
- System clock generator
  - Clock quality check
  - User selectable fast wake-up from Stop in self-clock mode for power saving and immediate program execution
  - Clock switch for either oscillator or PLL based system clocks
- Computer operating properly (COP) watchdog timer with time-out clear window
- System reset generation from the following possible sources:
  - Power on reset
  - Low voltage reset
  - Illegal address reset
  - COP reset
  - Loss of clock reset
  - External pin reset
- Real-time interrupt (RTI)

2.1.2 Modes of Operation

This subsection lists and briefly describes all operating modes supported by the CRG.

- Run mode

  All functional parts of the CRG are running during normal run mode. If RTI or COP functionality is required, the individual bits of the associated rate select registers (COPCTL, RTICTL) have to be set to a nonzero value.

- Wait mode

  In this mode, the PLL can be disabled automatically depending on the PLLSEL bit in the CLKSEL register.

- Stop mode

  Depending on the setting of the PSTP bit, stop mode can be differentiated between full stop mode (PSTP = 0) and pseudo stop mode (PSTP = 1).

  — Full stop mode

    The oscillator is disabled and thus all system and core clocks are stopped. The COP and the RTI remain frozen.

  — Pseudo stop mode

    The oscillator continues to run and most of the system and core clocks are stopped. If the respective enable bits are set, the COP and RTI will continue to run, or else they remain frozen.

- Self clock mode

  Self clock mode will be entered if the clock monitor enable bit (CME) and the self clock mode enable bit (SCME) are both asserted and the clock monitor in the oscillator block detects a loss of clock. As soon as self clock mode is entered, the CRG starts to perform a clock quality check. Self clock mode remains active until the clock quality check indicates that the required quality of the incoming clock signal is met (frequency and amplitude). Self clock mode should be used for safety purposes only. It provides reduced functionality to the MCU in case a loss of clock is causing severe system conditions.

2.1.3 Block Diagram

Figure 2-1 shows a block diagram of the CRG.

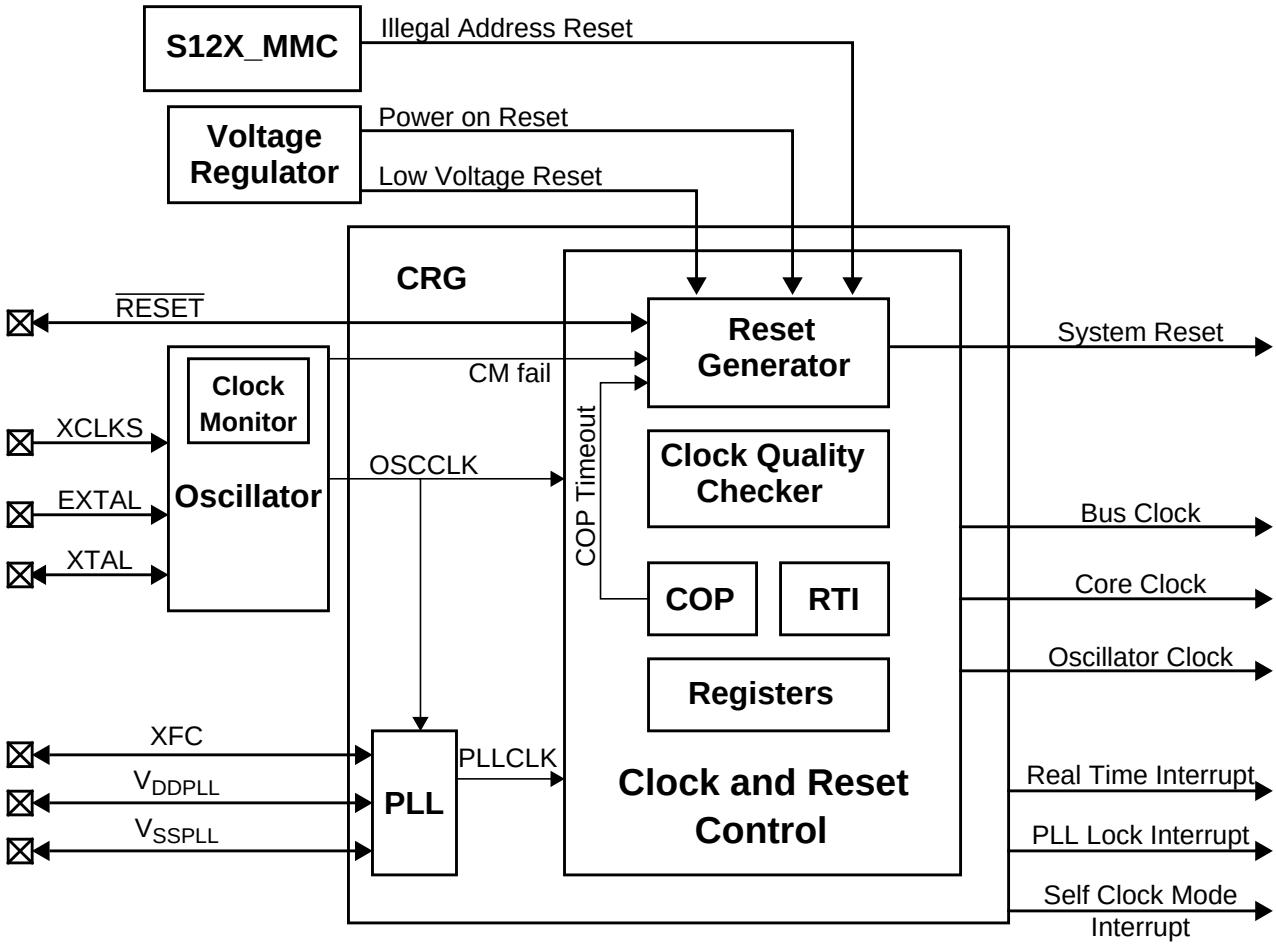

Figure 2-1. CRG Block Diagram

2.2 External Signal Description

This section lists and describes the signals that connect off chip.

2.2.1 V_{DDPLL} and V_{SSPLL} — Operating and Ground Voltage Pins

These pins provide operating voltage (V_{DDPLL}) and ground (V_{SSPLL}) for the PLL circuitry. This allows the supply voltage to the PLL to be independently bypassed. Even if PLL usage is not required, V_{DDPLL} and V_{SSPLL} must be connected to properly.

2.2.2 XFC — External Loop Filter Pin

A passive external loop filter must be placed on the XFC pin. The filter is a second-order, low-pass filter that eliminates the VCO input ripple. The value of the external filter network and the reference frequency determines the speed of the corrections and the stability of the PLL. Refer to the device specification for calculation of PLL Loop Filter (XFC) components**.** If PLL usage is not required, the XFC pin must be tied to V_{DDPLL}.

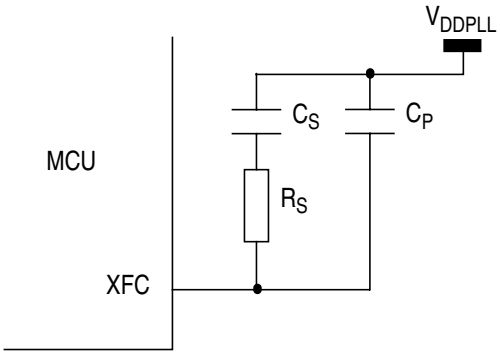

Figure 2-2. PLL Loop Filter Connections

2.2.3 $\overline{\text{RESET}}$ — Reset Pin

$\overline{\text{RESET}}$ is an active low bidirectional reset pin. As an input. it initializes the MCU asynchronously to a known start-up state. As an open-drain output, it indicates that a system reset (internal to the MCU) has been triggered.

2.3 Memory Map and Register Definition

This section provides a detailed description of all registers accessible in the CRG.

2.3.1 Module Memory Map

Table 2-1 gives an overview on all CRG registers.

Table 2-1. CRG Memory Map

Address Offset	Use	Access
0x_00	CRG Synthesizer Register (SYNR)	R/W
0x_01	CRG Reference Divider Register (REFDV)	R/W
0x_02	CRG Test Flags Register (CTFLG)[1]	R/W
0x_03	CRG Flags Register (CRGFLG)	R/W
0x_04	CRG Interrupt Enable Register (CRGINT)	R/W
0x_05	CRG Clock Select Register (CLKSEL)	R/W
0x_06	CRG PLL Control Register (PLLCTL)	R/W
0x_07	CRG RTI Control Register (RTICTL)	R/W
0x_08	CRG COP Control Register (COPCTL)	R/W
0x_09	CRG Force and Bypass Test Register (FORBYP)[2]	R/W
0x_0A	CRG Test Control Register (CTCTL)[3]	R/W
0x_0B	CRG COP Arm/Timer Reset (ARMCOP)	R/W

[1] CTFLG is intended for factory test purposes only.
[2] FORBYP is intended for factory test purposes only.
[3] CTCTL is intended for factory test purposes only.

NOTE

Register Address = Base Address + Address Offset, where the Base Address is defined at the MCU level and the Address Offset is defined at the module level.

2.3.2 Register Descriptions

This section describes in address order all the CRG registers and their individual bits.

Register Name		Bit 7	6	5	4	3	2	1	Bit 0
SYNR	R	0	0	SYN5	SYN4	SYN3	SYN2	SYN1	SYN0
	W								
REFDV	R	0	0	REFDV5	REFDV4	REFDV3	REFDV2	REFDV1	REFDV0
	W								
CTFLG	R	0	0	0	0	0	0	0	0
	W								
CRGFLG	R	RTIF	PORF	LVRF	LOCKIF	LOCK	TRACK	SCMIF	SCM
	W								
CRGINT	R	RTIE	ILAF	0	LOCKIE	0	0	SCMIE	0
	W								
CLKSEL	R	PLLSEL	PSTP	0	0	PLLWAI	0	RTIWAI	COPWAI
	W								
PLLCTL	R	CME	PLLON	AUTO	ACQ	FSTWKP	PRE	PCE	SCME
	W								
RTICTL	R	RTDEC	RTR6	RTR5	RTR4	RTR3	RTR2	RTR1	RTR0
	W								
COPCTL	R	WCOP	RSBCK	0	0	0	CR2	CR1	CR0
	W			WRTMASK					
FORBYP	R	0	0	0	0	0	0	0	0
	W								
CTCTL	R	1	0	0	0	0	0	0	0
	W								
ARMCOP	R	0	0	0	0	0	0	0	0
	W	Bit 7	Bit 6	Bit 5	Bit 4	Bit 3	Bit 2	Bit 1	Bit 0

= Unimplemented or Reserved

Figure 2-3. S12CRGV6 Register Summary

2.3.2.1 CRG Synthesizer Register (SYNR)

The SYNR register controls the multiplication factor of the PLL. If the PLL is on, the count in the loop divider (SYNR) register effectively multiplies up the PLL clock (PLLCLK) from the reference frequency by 2 x (SYNR + 1). PLLCLK will not be below the minimum VCO frequency (f_{SCM}).

$$PLLCLK = 2xOSCCLKx\frac{(SYNR + 1)}{(REFDV + 1)}$$

NOTE

If PLL is selected (PLLSEL=1), Bus Clock = PLLCLK / 2
Bus Clock must not exceed the maximum operating system frequency.

	7	6	5	4	3	2	1	0
R	0	0	SYN5	SYN4	SYN3	SYN2	SYN1	SYN0
W								
Reset	0	0	0	0	0	0	0	0

= Unimplemented or Reserved

Figure 2-4. CRG Synthesizer Register (SYNR)

Read: Anytime

Write: Anytime except if PLLSEL = 1

NOTE

Write to this register initializes the lock detector bit and the track detector bit.

2.3.2.2 CRG Reference Divider Register (REFDV)

The REFDV register provides a finer granularity for the PLL multiplier steps. The count in the reference divider divides OSCCLK frequency by REFDV + 1.

	7	6	5	4	3	2	1	0
R	0	0	REFDV5	REFDV4	REFDV3	REFDV2	REFDV1	REFDV0
W								
Reset	0	0	0	0	0	0	0	0

= Unimplemented or Reserved

Figure 2-5. CRG Reference Divider Register (REFDV)

Read: Anytime

Write: Anytime except when PLLSEL = 1

NOTE

Write to this register initializes the lock detector bit and the track detector bit.

2.3.2.3 Reserved Register (CTFLG)

This register is reserved for factory testing of the CRG module and is not available in normal modes.

	7	6	5	4	3	2	1	0
R	0	0	0	0	0	0	0	0
W								
Reset	0	0	0	0	0	0	0	0

= Unimplemented or Reserved

Figure 2-6. Reserved Register (CTFLG)

Read: Always reads 0x_00 in normal modes

Write: Unimplemented in normal modes

NOTE

Writing to this register when in special mode can alter the CRG fucntionality.

2.3.2.4 CRG Flags Register (CRGFLG)

This register provides CRG status bits and flags.

	7	6	5	4	3	2	1	0
R	RTIF	PORF	LVRF	LOCKIF	LOCK	TRACK	SCMIF	SCM
W								
Reset	0	1	2	0	0	0	0	0

1. PORF is set to 1 when a power on reset occurs. Unaffected by system reset.
2. LVRF is set to 1 when a low-voltage reset occurs. Unaffected by system reset.

= Unimplemented or Reserved

Figure 2-7. CRG Flags Register (CRGFLG)

Read: Anytime

Write: Refer to each bit for individual write conditions

Table 2-2. CRGFLG Field Descriptions

Field	Description
7 RTIF	**Real Time Interrupt Flag** — RTIF is set to 1 at the end of the RTI period. This flag can only be cleared by writing a 1. Writing a 0 has no effect. If enabled (RTIE = 1), RTIF causes an interrupt request. 0 RTI time-out has not yet occurred. 1 RTI time-out has occurred.
6 PORF	**Power on Reset Flag** — PORF is set to 1 when a power on reset occurs. This flag can only be cleared by writing a 1. Writing a 0 has no effect. 0 Power on reset has not occurred. 1 Power on reset has occurred.

Table 2-2. CRGFLG Field Descriptions (continued)

Field	Description
5 LVRF	**Low Voltage Reset Flag** — If low voltage reset feature is not available (see device specification) LVRF always reads 0. LVRF is set to 1 when a low voltage reset occurs. This flag can only be cleared by writing a 1. Writing a 0 has no effect. 0 Low voltage reset has not occurred. 1 Low voltage reset has occurred.
4 LOCKIF	**PLL Lock Interrupt Flag** — LOCKIF is set to 1 when LOCK status bit changes. This flag can only be cleared by writing a 1. Writing a 0 has no effect.If enabled (LOCKIE = 1), LOCKIF causes an interrupt request. 0 No change in LOCK bit. 1 LOCK bit has changed.
3 LOCK	**Lock Status Bit** — LOCK reflects the current state of PLL lock condition. This bit is cleared in self clock mode. Writes have no effect. 0 PLL VCO is not within the desired tolerance of the target frequency. 1 PLL VCO is within the desired tolerance of the target frequency.
2 TRACK	**Track Status Bit** — TRACK reflects the current state of PLL track condition. This bit is cleared in self clock mode. Writes have no effect. 0 Acquisition mode status. 1Tracking mode status.
1 SCMIF	**Self Clock Mode Interrupt Flag** — SCMIF is set to 1 when SCM status bit changes. This flag can only be cleared by writing a 1. Writing a 0 has no effect. If enabled (SCMIE = 1), SCMIF causes an interrupt request. 0 No change in SCM bit. 1 SCM bit has changed.
0 SCM	**Self Clock Mode Status Bit** — SCM reflects the current clocking mode. Writes have no effect. 0 MCU is operating normally with OSCCLK available. 1 MCU is operating in self clock mode with OSCCLK in an unknown state. All clocks are derived from PLLCLK running at its minimum frequency f_{SCM}.

2.3.2.5 CRG Interrupt Enable Register (CRGINT)

This register enables CRG interrupt requests.

	7	6	5	4	3	2	1	0
R	RTIE	ILAF	0	LOCKIE	0	0	SCMIE	0
W								
Reset	0	[1]	0	0	0	0	0	0

1. ILAF is set to 1 when an illegal address reset occurs. Unaffected by system reset. Cleared by power on or low voltage reset.

= Unimplemented or Reserved

Figure 2-8. CRG Interrupt Enable Register (CRGINT)

Read: Anytime

Write: Anytime

Table 2-3. CRGINT Field Descriptions

Field	Description
7 RTIE	**Real Time Interrupt Enable Bit** 0 Interrupt requests from RTI are disabled. 1 Interrupt will be requested whenever RTIF is set.
6 ILAF	**Illegal Address Reset Flag** — ILAF is set to 1 when an illegal address reset occurs. Refer to S12XMMC Block Guide for details. This flag can only be cleared by writing a 1. Writing a 0 has no effect. 0 Illegal address reset has not occurred. 1 Illegal address reset has occurred.
4 LOCKIE	**Lock Interrupt Enable Bit** 0 LOCK interrupt requests are disabled. 1 Interrupt will be requested whenever LOCKIF is set.
1 SCMIE	**Self ClockMmode Interrupt Enable Bit** 0 SCM interrupt requests are disabled. 1 Interrupt will be requested whenever SCMIF is set.

2.3.2.6 CRG Clock Select Register (CLKSEL)

This register controls CRG clock selection. Refer to Figure 2-17 for more details on the effect of each bit.

	7	6	5	4	3	2	1	0
R W	PLLSEL	PSTP	0	0	PLLWAI	0	RTIWAI	COPWAI
Reset	0	0	0	0	0	0	0	0

= Unimplemented or Reserved

Figure 2-9. CRG Clock Select Register (CLKSEL)

Read: Anytime

Write: Refer to each bit for individual write conditions

Table 2-4. CLKSEL Field Descriptions

Field	Description
7 PLLSEL	**PLL Select Bit** — Write anytime. Writing a1 when LOCK = 0 and AUTO = 1, or TRACK = 0 and AUTO = 0 has no effect This prevents the selection of an unstable PLLCLK as SYSCLK. PLLSEL bit is cleared when the MCU enters self clock mode, Stop mode or wait mode with PLLWAI bit set. 0 System clocks are derived from OSCCLK (Bus Clock = OSCCLK / 2). 1 System clocks are derived from PLLCLK (Bus Clock = PLLCLK / 2).
6 PSTP	**Pseudo Stop Bit** Write: Anytime This bit controls the functionality of the oscillator during stop mode. 0 Oscillator is disabled in stop mode. 1 Oscillator continues to run in stop mode (pseudo stop). **Note:** Pseudo stop mode allows for faster STOP recovery and reduces the mechanical stress and aging of the resonator in case of frequent STOP conditions at the expense of a slightly increased power consumption.
3 PLLWAI	**PLL Stops in Wait Mode Bit** Write: Anytime If PLLWAI is set, the CRG will clear the PLLSEL bit before entering wait mode. The PLLON bit remains set during wait mode, but the PLL is powered down. Upon exiting wait mode, the PLLSEL bit has to be set manually if PLL clock is required. While the PLLWAI bit is set, the AUTO bit is set to 1 in order to allow the PLL to automatically lock on the selected target frequency after exiting wait mode. 0 PLL keeps running in wait mode. 1 PLL stops in wait mode.
1 RTIWAI	**RTI Stops in Wait Mode Bit** Write: Anytime 0 RTI keeps running in wait mode. 1 RTI stops and initializes the RTI dividers whenever the part goes into wait mode.
0 COPWAI	**COP Stops in Wait Mode Bit** Normal modes: Write once Special modes: Write anytime 0 COP keeps running in wait mode. 1 COP stops and initializes the COP counter whenever the part goes into wait mode.

2.3.2.7 CRG PLL Control Register (PLLCTL)

This register controls the PLL functionality.

	7	6	5	4	3	2	1	0
R W	CME	PLLON	AUTO	ACQ	FSTWKP	PRE	PCE	SCME
Reset	1	1	1	1	0	0	0	1

Figure 2-10. CRG PLL Control Register (PLLCTL)

Read: Anytime

Write: Refer to each bit for individual write conditions

Table 2-5. PLLCTL Field Descriptions

Field	Description
7 CME	**Clock Monitor Enable Bit** — CME enables the clock monitor. Write anytime except when SCM = 1. 0 Clock monitor is disabled. 1 Clock monitor is enabled. Slow or stopped clocks will cause a clock monitor reset sequence or self clock mode. **Note:** Operating with CME = 0 will not detect any loss of clock. In case of poor clock quality, this could cause unpredictable operation of the MCU! **Note:** In stop mode (PSTP = 0) the clock monitor is disabled independently of the CME bit setting and any loss of external clock will not be detected. Also after wake-up from stop mode (PSTP = 0) with fast wake-up enabled (FSTWKP = 1) the clock monitor is disabled independently of the CME bit setting and any loss of external clock will not be detected.
6 PLLON	**Phase Lock Loop On Bit** — PLLON turns on the PLL circuitry. In self clock mode, the PLL is turned on, but the PLLON bit reads the last latched value. Write anytime except when PLLSEL = 1. 0 PLL is turned off. 1 PLL is turned on. If AUTO bit is set, the PLL will lock automatically.
5 AUTO	**Automatic Bandwidth Control Bit** — AUTO selects either the high bandwidth (acquisition) mode or the low bandwidth (tracking) mode depending on how close to the desired frequency the VCO is running. Write anytime except when PLLWAI = 1, because PLLWAI sets the AUTO bit to 1. 0 Automatic mode control is disabled and the PLL is under software control, using ACQ bit. 1 Automatic mode control is enabled and ACQ bit has no effect.
4 ACQ	**Acquisition Bit** Write anytime. If AUTO=1 this bit has no effect. 0 Low bandwidth filter is selected. 1 High bandwidth filter is selected.
3 FSTWKP	**Fast Wake-up from Full Stop Bit** — FSTWKP enables fast wake-up from full stop mode. Write anytime. If self-clock mode is disabled (SCME = 0) this bit has no effect. 0 Fast wake-up from full stop mode is disabled. 1 Fast wake-up from full stop mode is enabled. When waking up from full stop mode the system will immediately resume operation i self-clock mode (see Section 2.4.1.4, “Clock Quality Checker”). The SCMIF flag will not be set. The system will remain in self-clock mode with oscillator and clock monitor disabled until FSTWKP bit is cleared. The clearing of FSTWKP will start the oscillator, the clock monitor and the clock quality check. If the clock quality check is successful, the CRG will switch all system clocks to OSCCLK. The SCMIF flag will be set. See application examples in Figure 2-23 and Figure 2-24.

Table 2-5. PLLCTL Field Descriptions (continued)

Field	Description
2 PRE	**RTI Enable during Pseudo Stop Bit** — PRE enables the RTI during pseudo stop mode. Write anytime. 0 RTI stops running during pseudo stop mode. 1 RTI continues running during pseudo stop mode. **Note:** If the PRE bit is cleared the RTI dividers will go static while pseudo stop mode is active. The RTI dividers will not initialize like in wait mode with RTIWAI bit set.
1 PCE	**COP Enable during Pseudo Stop Bit** — PCE enables the COP during pseudo stop mode. Write anytime. 0 COP stops running during pseudo stop mode 1 COP continues running during pseudo stop mode **Note:** If the PCE bit is cleared, the COP dividers will go static while pseudo stop mode is active. The COP dividers will not initialize like in wait mode with COPWAI bit set.
0 SCME	**Self Clock Mode Enable Bit** Normal modes: Write once Special modes: Write anytime SCME can not be cleared while operating in self clock mode (SCM = 1). 0 Detection of crystal clock failure causes clock monitor reset (see Section 2.5.2, “Clock Monitor Reset”). 1 Detection of crystal clock failure forces the MCU in self clock mode (see Section 2.4.2.2, “Self Clock Mode”).

2.3.2.8 CRG RTI Control Register (RTICTL)

This register selects the timeout period for the real time interrupt.

	7	6	5	4	3	2	1	0
R W	RTDEC	RTR6	RTR5	RTR4	RTR3	RTR2	RTR1	RTR0
Reset	0	0	0	0	0	0	0	0

Figure 2-11. CRG RTI Control Register (RTICTL)

Read: Anytime

Write: Anytime

NOTE

A write to this register initializes the RTI counter.

Table 2-6. RTICTL Field Descriptions

Field	Description
7 RTDEC	**Decimal or Binary Divider Select Bit** — RTDEC selects decimal or binary based prescaler values. 0 Binary based divider value. See Table 2-7 1 Decimal based divider value. See Table 2-8
6–4 RTR[6:4]	**Real Time Interrupt Prescale Rate Select Bits** — These bits select the prescale rate for the RTI. See Table 2-7 and Table 2-8.
3–0 RTR[3:0]	**Real Time Interrupt Modulus Counter Select Bits** — These bits select the modulus counter target value to provide additional granularity.Table 2-7 and Table 2-8 show all possible divide values selectable by the RTICTL register. The source clock for the RTI is OSCCLK.

Table 2-7. RTI Frequency Divide Rates for RTDEC = 0

RTR[3:0]	RTR[6:4] =							
	000 (OFF)	**001 (2^{10})**	**010 (2^{11})**	**011 (2^{12})**	**100 (2^{13})**	**101 (2^{14})**	**110 (2^{15})**	**111 (2^{16})**
0000 (÷1)	OFF*	2^{10}	2^{11}	2^{12}	2^{13}	2^{14}	2^{15}	2^{16}
0001 (÷2)	OFF	$2x2^{10}$	$2x2^{11}$	$2x2^{12}$	$2x2^{13}$	$2x2^{14}$	$2x2^{15}$	$2x2^{16}$
0010 (÷3)	OFF	$3x2^{10}$	$3x2^{11}$	$3x2^{12}$	$3x2^{13}$	$3x2^{14}$	$3x2^{15}$	$3x2^{16}$
0011 (÷4)	OFF	$4x2^{10}$	$4x2^{11}$	$4x2^{12}$	$4x2^{13}$	$4x2^{14}$	$4x2^{15}$	$4x2^{16}$
0100 (÷5)	OFF	$5x2^{10}$	$5x2^{11}$	$5x2^{12}$	$5x2^{13}$	$5x2^{14}$	$5x2^{15}$	$5x2^{16}$
0101 (÷6)	OFF	$6x2^{10}$	$6x2^{11}$	$6x2^{12}$	$6x2^{13}$	$6x2^{14}$	$6x2^{15}$	$6x2^{16}$
0110 (÷7)	OFF	$7x2^{10}$	$7x2^{11}$	$7x2^{12}$	$7x2^{13}$	$7x2^{14}$	$7x2^{15}$	$7x2^{16}$
0111 (÷8)	OFF	$8x2^{10}$	$8x2^{11}$	$8x2^{12}$	$8x2^{13}$	$8x2^{14}$	$8x2^{15}$	$8x2^{16}$
1000 (÷9)	OFF	$9x2^{10}$	$9x2^{11}$	$9x2^{12}$	$9x2^{13}$	$9x2^{14}$	$9x2^{15}$	$9x2^{16}$
1001 (÷10)	OFF	$10x2^{10}$	$10x2^{11}$	$10x2^{12}$	$10x2^{13}$	$10x2^{14}$	$10x2^{15}$	$10x2^{16}$
1010 (÷11)	OFF	$11x2^{10}$	$11x2^{11}$	$11x2^{12}$	$11x2^{13}$	$11x2^{14}$	$11x2^{15}$	$11x2^{16}$
1011 (÷12)	OFF	$12x2^{10}$	$12x2^{11}$	$12x2^{12}$	$12x2^{13}$	$12x2^{14}$	$12x2^{15}$	$12x2^{16}$
1100 (÷13)	OFF	$13x2^{10}$	$13x2^{11}$	$13x2^{12}$	$13x2^{13}$	$13x2^{14}$	$13x2^{15}$	$13x2^{16}$
1101 (÷14)	OFF	$14x2^{10}$	$14x2^{11}$	$14x2^{12}$	$14x2^{13}$	$14x2^{14}$	$14x2^{15}$	$14x2^{16}$
1110 (÷15)	OFF	$15x2^{10}$	$15x2^{11}$	$15x2^{12}$	$15x2^{13}$	$15x2^{14}$	$15x2^{15}$	$15x2^{16}$
1111 (÷16)	OFF	$16x2^{10}$	$16x2^{11}$	$16x2^{12}$	$16x2^{13}$	$16x2^{14}$	$16x2^{15}$	$16x2^{16}$

* Denotes the default value out of reset.This value should be used to disable the RTI to ensure future backwards compatibility.

Table 2-8. RTI Frequency Divide Rates for RTDEC = 1

RTR[3:0]	RTR[6:4] =							
	000 ($1x10^3$)	**001 ($2x10^3$)**	**010 ($5x10^3$)**	**011 ($10x10^3$)**	**100 ($20x10^3$)**	**101 ($50x10^3$)**	**110 ($100x10^3$)**	**111 ($200x10^3$)**
0000 (÷1)	$1x10^3$	$2x10^3$	$5x10^3$	$10x10^3$	$20x10^3$	$50x10^3$	$100x10^3$	$200x10^3$
0001 (÷2)	$2x10^3$	$4x10^3$	$10x10^3$	$20x10^3$	$40x10^3$	$100x10^3$	$200x10^3$	$400x10^3$
0010 (÷3)	$3x10^3$	$6x10^3$	$15x10^3$	$30x10^3$	$60x10^3$	$150x10^3$	$300x10^3$	$600x10^3$
0011 (÷4)	$4x10^3$	$8x10^3$	$20x10^3$	$40x10^3$	$80x10^3$	$200x10^3$	$400x10^3$	$800x10^3$
0100 (÷5)	$5x10^3$	$10x10^3$	$25x10^3$	$50x10^3$	$100x10^3$	$250x10^3$	$500x10^3$	$1x10^6$
0101 (÷6)	$6x10^3$	$12x10^3$	$30x10^3$	$60x10^3$	$120x10^3$	$300x10^3$	$600x10^3$	$1.2x10^6$
0110 (÷7)	$7x10^3$	$14x10^3$	$35x10^3$	$70x10^3$	$140x10^3$	$350x10^3$	$700x10^3$	$1.4x10^6$
0111 (÷8)	$8x10^3$	$16x10^3$	$40x10^3$	$80x10^3$	$160x10^3$	$400x10^3$	$800x10^3$	$1.6x10^6$
1000 (÷9)	$9x10^3$	$18x10^3$	$45x10^3$	$90x10^3$	$180x10^3$	$450x10^3$	$900x10^3$	$1.8x10^6$
1001 (÷10)	$10\ x10^3$	$20x10^3$	$50x10^3$	$100x10^3$	$200x10^3$	$500x10^3$	$1x10^6$	$2x10^6$
1010 (÷11)	$11\ x10^3$	$22x10^3$	$55x10^3$	$110x10^3$	$220x10^3$	$550x10^3$	$1.1x10^6$	$2.2x10^6$
1011 (÷12)	$12x10^3$	$24x10^3$	$60x10^3$	$120x10^3$	$240x10^3$	$600x10^3$	$1.2x10^6$	$2.4x10^6$
1100 (÷13)	$13x10^3$	$26x10^3$	$65x10^3$	$130x10^3$	$260x10^3$	$650x10^3$	$1.3x10^6$	$2.6x10^6$
1101 (÷14)	$14x10^3$	$28x10^3$	$70x10^3$	$140x10^3$	$280x10^3$	$700x10^3$	$1.4x10^6$	$2.8x10^6$
1110 (÷15)	$15x10^3$	$30x10^3$	$75x10^3$	$150x10^3$	$300x10^3$	$750x10^3$	$1.5x10^6$	$3x10^6$
1111 (÷16)	$16x10^3$	$32x10^3$	$80x10^3$	$160x10^3$	$320x10^3$	$800x10^3$	$1.6x10^6$	$3.2x10^6$

2.3.2.9 CRG COP Control Register (COPCTL)

This register controls the COP (computer operating properly) watchdog.

	7	6	5	4	3	2	1	0
R	WCOP	RSBCK	0	0	0	CR2	CR1	CR0
W			WRTMASK					
Reset[1]		0	0	0	0			

1. Refer to Device User Guide (Section: CRG) for reset values of WCOP, CR2, CR1, and CR0.

= Unimplemented or Reserved

Figure 2-12. CRG COP Control Register (COPCTL)

Read: Anytime

Write:

1. RSBCK: Anytime in special modes; write to “1” but not to “0” in all other modes
2. WCOP, CR2, CR1, CR0:
   — Anytime in special modes
   — Write once in all other modes
   Writing CR[2:0] to “000” has no effect, but counts for the “write once” condition.
   Writing WCOP to “0” has no effect, but counts for the “write once” condition.

The COP time-out period is restarted if one these two conditions is true:

1. Writing a nonzero value to CR[2:0] (anytime in special modes, once in all other modes) with WRTMASK = 0.

   or

2. Changing RSBCK bit from “0” to “1”.

Table 2-9. COPCTL Field Descriptions

Field	Description
7 WCOP	**Window COP Mode Bit** — When set, a write to the ARMCOP register must occur in the last 25% of the selected period. A write during the first 75% of the selected period will reset the part. As long as all writes occur during this window, 0x_55 can be written as often as desired. Once 0x_AA is written after the 0x_55, the time-out logic restarts and the user must wait until the next window before writing to ARMCOP. Table 2-10 shows the duration of this window for the seven available COP rates. 0 Normal COP operation 1 Window COP operation
6 RSBCK	**COP and RTI Stop in Active BDM Mode Bit** 0 Allows the COP and RTI to keep running in active BDM mode. 1 Stops the COP and RTI counters whenever the part is in active BDM mode.

Table 2-9. COPCTL Field Descriptions (continued)

Field	Description
5 WRTMASK	**Write Mask for WCOP and CR[2:0] Bit** — This write-only bit serves as a mask for the WCOP and CR[2:0] bits while writing the COPCTL register. It is intended for BDM writing the RSBCK without touching the contents of WCOP and CR[2:0]. 0 Write of WCOP and CR[2:0] has an effect with this write of COPCTL 1 Write of WCOP and CR[2:0] has no effect with this write of COPCTL. (Does not count for “write once”.)
2–0 CR[1:0]	**COP Watchdog Timer Rate Select** — These bits select the COP time-out rate (see Table 2-10). The COP time-out period is OSCCLK period divided by CR[2:0] value. Writing a nonzero value to CR[2:0] enables the COP counter and starts the time-out period. A COP counter time-out causes a system reset. This can be avoided by periodically (before time-out) reinitializing the COP counter via the ARMCOP register. While all of the following four conditions are true the CR[2:0], WCOP bits are ignored and the COP operates at highest time-out period (2^{24} cycles) in normal COP mode (Window COP mode disabled): 1) COP is enabled (CR[2:0] is not 000) 2) BDM mode active 3) RSBCK = 0 4) Operation in emulation or special modes

Table 2-10. COP Watchdog Rates[1]

CR2	CR1	CR0	OSCCLK Cycles to Time-out
0	0	0	COP disabled
0	0	1	2^{14}
0	1	0	2^{16}
0	1	1	2^{18}
1	0	0	2^{20}
1	0	1	2^{22}
1	1	0	2^{23}
1	1	1	2^{24}

[1] OSCCLK cycles are referenced from the previous COP time-out reset (writing 0x_55/0x_AA to the ARMCOP register)

2.3.2.10 Reserved Register (FORBYP)

NOTE

This reserved register is designed for factory test purposes only, and is not intended for general user access. Writing to this register when in special modes can alter the CRG's functionality.

	7	6	5	4	3	2	1	0
R	0	0	0	0	0	0	0	0
W								
Reset	0	0	0	0	0	0	0	0

= Unimplemented or Reserved

Figure 2-13. Reserved Register (FORBYP)

Read: Always read 0x_00 except in special modes

Write: Only in special modes

2.3.2.11 Reserved Register (CTCTL)

NOTE

This reserved register is designed for factory test purposes only, and is not intended for general user access. Writing to this register when in special test modes can alter the CRG's functionality.

	7	6	5	4	3	2	1	0
R	1	0	0	0	0	0	0	0
W								
Reset	0	0	0	0	0	0	0	0

= Unimplemented or Reserved

Figure 2-14. Reserved Register (CTCTL)

Read: always read 0x_80 except in special modes

Write: only in special modes

2.3.2.12 CRG COP Timer Arm/Reset Register (ARMCOP)

This register is used to restart the COP time-out period.

	7	6	5	4	3	2	1	0
R	0	0	0	0	0	0	0	0
W	Bit 7	Bit 6	Bit 5	Bit 4	Bit 3	Bit 2	Bit 1	Bit 0
Reset	0	0	0	0	0	0	0	0

Figure 2-15. ARMCOP Register Diagram

Read: Always reads 0x_00

Write: Anytime

When the COP is disabled (CR[2:0] = “000”) writing to this register has no effect.

When the COP is enabled by setting CR[2:0] nonzero, the following applies:

> Writing any value other than 0x_55 or 0x_AA causes a COP reset. To restart the COP time-out period you must write 0x_55 followed by a write of 0x_AA. Other instructions may be executed between these writes but the sequence (0x_55, 0x_AA) must be completed prior to COP end of time-out period to avoid a COP reset. Sequences of 0x_55 writes or sequences of 0x_AA writes are allowed. When the WCOP bit is set, 0x_55 and 0x_AA writes must be done in the last 25% of the selected time-out period; writing any value in the first 75% of the selected period will cause a COP reset.

2.4 Functional Description

2.4.1 Functional Blocks

2.4.1.1 Phase Locked Loop (PLL)

The PLL is used to run the MCU from a different time base than the incoming OSCCLK. For increased flexibility, OSCCLK can be divided in a range of 1 to 16 to generate the reference frequency. This offers a finer multiplication granularity. The PLL can multiply this reference clock by a multiple of 2, 4, 6,... 126,128 based on the SYNR register.

$$PLLCLK = 2 \times OSCCLK \times \frac{[SYNR + 1]}{[REFDV + 1]}$$

CAUTION

Although it is possible to set the two dividers to command a very high clock frequency, do not exceed the specified bus frequency limit for the MCU.
If (PLLSEL = 1), Bus Clock = PLLCLK / 2

The PLL is a frequency generator that operates in either acquisition mode or tracking mode, depending on the difference between the output frequency and the target frequency. The PLL can change between acquisition and tracking modes either automatically or manually.

The VCO has a minimum operating frequency, which corresponds to the self clock mode frequency f_{SCM}.

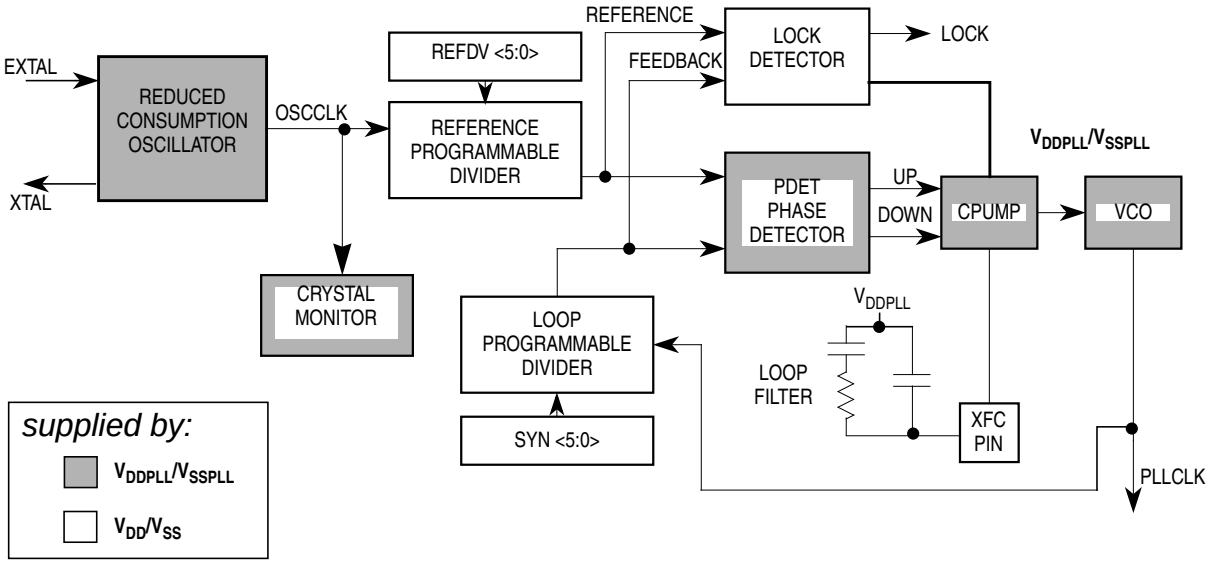

Figure 2-16. PLL Functional Diagram

2.4.1.1.1 PLL Operation

The oscillator output clock signal (OSCCLK) is fed through the reference programmable divider and is divided in a range of 1 to 64 (REFDV + 1) to output the REFERENCE clock. The VCO output clock, (PLLCLK) is fed back through the programmable loop divider and is divided in a range of 2 to 128 in increments of [2 x (SYNR + 1)] to output the FEEDBACK clock. Figure 2-16.

The phase detector then compares the FEEDBACK clock, with the REFERENCE clock. Correction pulses are generated based on the phase difference between the two signals. The loop filter then slightly alters the DC voltage on the external filter capacitor connected to XFC pin, based on the width and direction of the correction pulse. The filter can make fast or slow corrections depending on its mode, as described in the next subsection. The values of the external filter network and the reference frequency determine the speed of the corrections and the stability of the PLL.

The minimum VCO frequency is reached with the XFC pin forced to V_{DDPLL}. This is the self clock mode frequency.

2.4.1.1.2 Acquisition and Tracking Modes

The lock detector compares the frequencies of the FEEDBACK clock, and the REFERENCE clock. Therefore, the speed of the lock detector is directly proportional to the final reference frequency. The circuit determines the mode of the PLL and the lock condition based on this comparison.

The PLL filter can be manually or automatically configured into one of two possible operating modes:

- Acquisition mode

  In acquisition mode, the filter can make large frequency corrections to the VCO. This mode is used at PLL start-up or when the PLL has suffered a severe noise hit and the VCO frequency is far off the desired frequency. When in acquisition mode, the TRACK status bit is cleared in the CRGFLG register.
- Tracking mode

  In tracking mode, the filter makes only small corrections to the frequency of the VCO. PLL jitter is much lower in tracking mode, but the response to noise is also slower. The PLL enters tracking mode when the VCO frequency is nearly correct and the TRACK bit is set in the CRGFLG register.

The PLL can change the bandwidth or operational mode of the loop filter manually or automatically.

In automatic bandwidth control mode (AUTO = 1), the lock detector automatically switches between acquisition and tracking modes. Automatic bandwidth control mode also is used to determine when the PLL clock (PLLCLK) is safe to use as the source for the system and core clocks. If PLL LOCK interrupt requests are enabled, the software can wait for an interrupt request and then check the LOCK bit. If interrupt requests are disabled, software can poll the LOCK bit continuously (during PLL start-up, usually) or at periodic intervals. In either case, only when the LOCK bit is set, is the PLLCLK clock safe to use as the source for the system and core clocks. If the PLL is selected as the source for the system and core clocks and the LOCK bit is clear, the PLL has suffered a severe noise hit and the software must take appropriate action, depending on the application.

The following conditions apply when the PLL is in automatic bandwidth control mode (AUTO = 1):

- The TRACK bit is a read-only indicator of the mode of the filter.
- The TRACK bit is set when the VCO frequency is within a certain tolerance, Δ_{trk}, and is clear when the VCO frequency is out of a certain tolerance, Δ_{unt}.
- The LOCK bit is a read-only indicator of the locked state of the PLL.
- The LOCK bit is set when the VCO frequency is within a certain tolerance, Δ_{Lock}, and is cleared when the VCO frequency is out of a certain tolerance, Δ_{unl}.
- Interrupt requests can occur if enabled (LOCKIE = 1) when the lock condition changes, toggling the LOCK bit.

The PLL can also operate in manual mode (AUTO = 0). Manual mode is used by systems that do not require an indicator of the lock condition for proper operation. Such systems typically operate well below the maximum system frequency (f_{sys}) and require fast start-up. The following conditions apply when in manual mode:

- ACQ is a writable control bit that controls the mode of the filter. Before turning on the PLL in manual mode, the ACQ bit should be asserted to configure the filter in acquisition mode.
- After turning on the PLL by setting the PLLON bit software must wait a given time (t_{acq}) before entering tracking mode (ACQ = 0).
- After entering tracking mode software must wait a given time (t_{al}) before selecting the PLLCLK as the source for system and core clocks (PLLSEL = 1).

2.4.1.2 System Clocks Generator

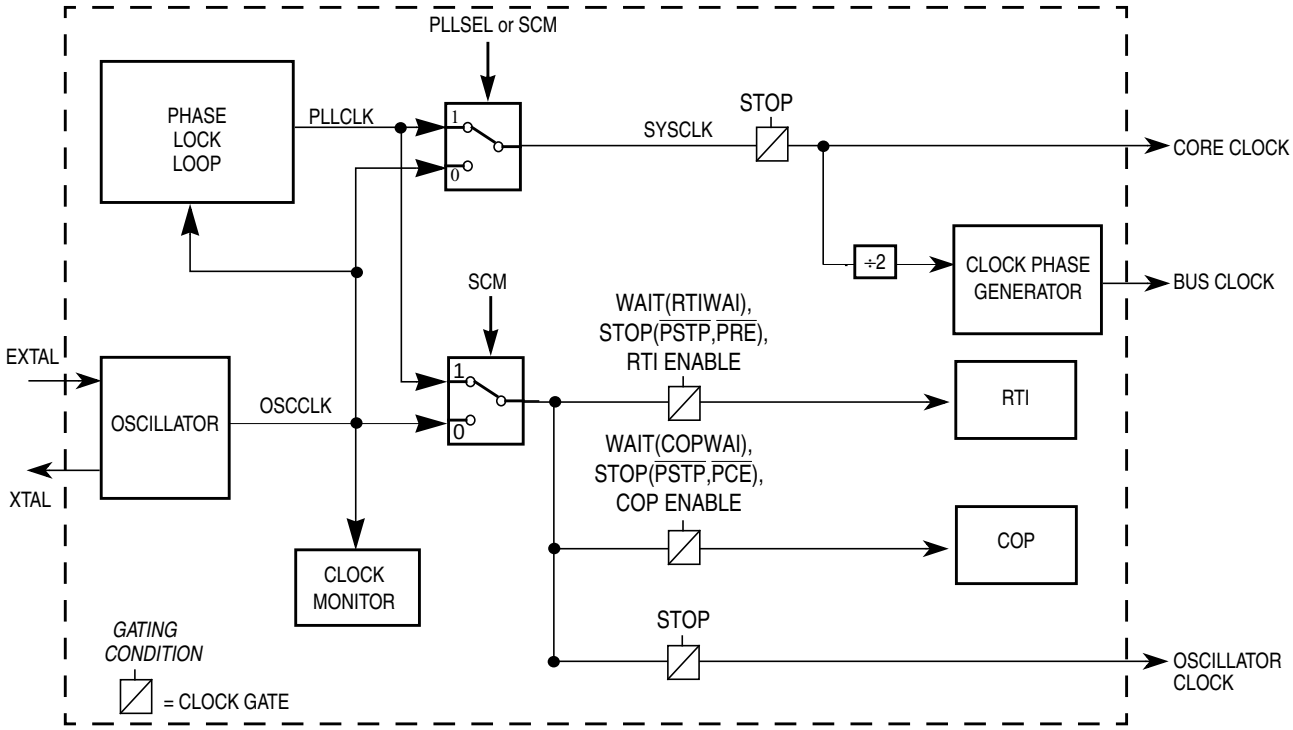

Figure 2-17. System Clocks Generator

The clock generator creates the clocks used in the MCU (see Figure 2-17). The gating condition placed on top of the individual clock gates indicates the dependencies of different modes (STOP, WAIT) and the setting of the respective configuration bits.

The peripheral modules use the bus clock. Some peripheral modules also use the oscillator clock. The memory blocks use the bus clock. If the MCU enters self clock mode (see Section 2.4.2.2, “Self Clock Mode”) oscillator clock source is switched to PLLCLK running at its minimum frequency f_{SCM}. The bus clock is used to generate the clock visible at the ECLK pin. The core clock signal is the clock for the CPU. The core clock is twice the bus clock as shown in Figure 2-18. But note that a CPU cycle corresponds to one bus clock.

PLL clock mode is selected with PLLSEL bit in the CLKSEL registerr. When selected, the PLL output clock drives SYSCLK for the main system including the CPU and peripherals. The PLL cannot be turned off by clearing the PLLON bit, if the PLL clock is selected. When PLLSEL is changed, it takes a maximum of 4 OSCCLK plus 4 PLLCLK cycles to make the transition. During the transition, all clocks freeze and CPU activity ceases.

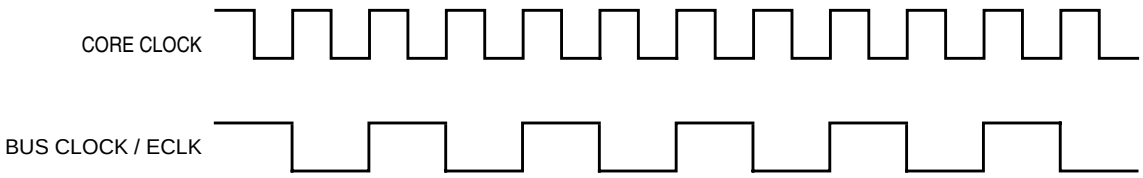

Figure 2-18. Core Clock and Bus Clock Relationship

2.4.1.3 Clock Monitor (CM)

If no OSCCLK edges are detected within a certain time, the clock monitor within the oscillator block generates a clock monitor fail event. The CRG then asserts self clock mode or generates a system reset depending on the state of SCME bit. If the clock monitor is disabled or the presence of clocks is detected no failure is indicated by the oscillator block.The clock monitor function is enabled/disabled by the CME control bit.

2.4.1.4 Clock Quality Checker

The clock monitor performs a coarse check on the incoming clock signal. The clock quality checker provides a more accurate check in addition to the clock monitor.

A clock quality check is triggered by any of the following events:

- Power on reset (*POR*)
- Low voltage reset (*LVR*)
- Wake-up from full stop mode (*exit full stop*)
- Clock monitor fail indication (*CM fail*)

A time window of 50,000 VCO clock cycles[1] is called *check window*.

1. VCO clock cycles are generated by the PLL when running at minimum frequency f_{SCM}.

A number greater equal than 4096 rising OSCCLK edges within a *check window* is called *osc ok*. Note that *osc ok* immediately terminates the current *check window*. See Figure 2-19 as an example.

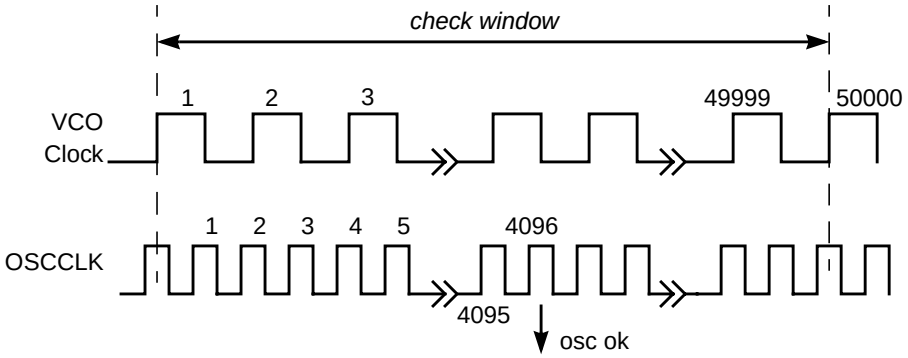

Figure 2-19. Check Window Example

The sequence for clock quality check is shown in Figure 2-20.

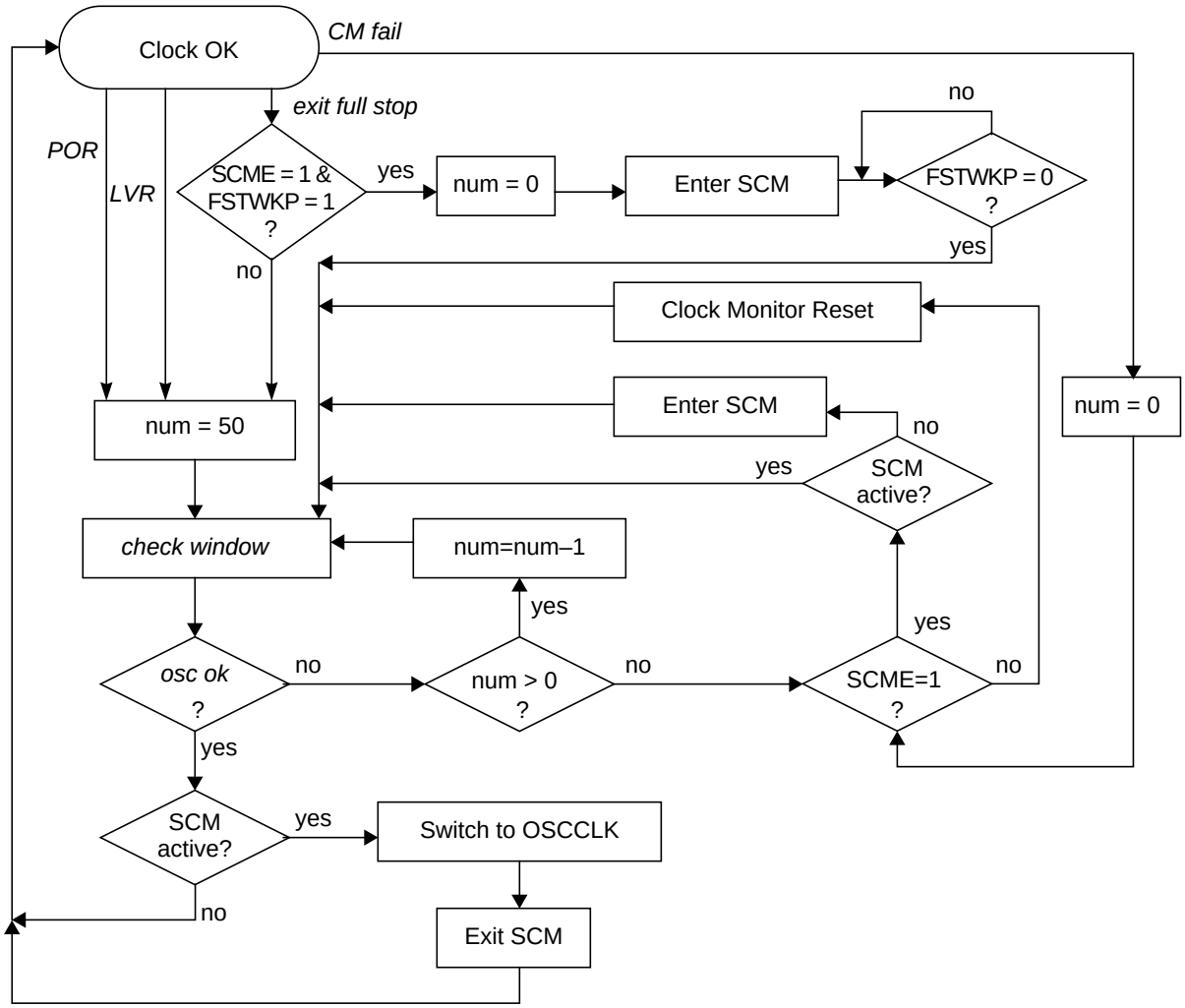

Figure 2-20. Sequence for Clock Quality Check

NOTE

Remember that in parallel to additional actions caused by self clock mode or clock monitor reset[1] handling the clock quality checker continues to check the OSCCLK signal.

The clock quality checker enables the PLL and the voltage regulator (VREG) anytime a clock check has to be performed. An ongoing clock quality check could also cause a running PLL (f_{SCM}) and an active VREG during pseudo stop mode or wait mode.

2.4.1.5 Computer Operating Properly Watchdog (COP)

The COP (free running watchdog timer) enables the user to check that a program is running and sequencing properly. When the COP is being used, software is responsible for keeping the COP from timing out. If the COP times out it is an indication that the software is no longer being executed in the intended sequence; thus a system reset is initiated (see Section 2.4.1.5, “Computer Operating Properly Watchdog (COP)”). The COP runs with a gated OSCCLK. Three control bits in the COPCTL register allow selection of seven COP time-out periods.

When COP is enabled, the program must write 0x_55 and 0x_AA (in this order) to the ARMCOP register during the selected time-out period. Once this is done, the COP time-out period is restarted. If the program fails to do this and the COP times out, the part will reset. Also, if any value other than 0x_55 or 0x_AA is written, the part is immediately reset.

Windowed COP operation is enabled by setting WCOP in the COPCTL register. In this mode, writes to the ARMCOP register to clear the COP timer must occur in the last 25% of the selected time-out period. A premature write will immediately reset the part.

If PCE bit is set, the COP will continue to run in pseudo stop mode.

2.4.1.6 Real Time Interrupt (RTI)

The RTI can be used to generate a hardware interrupt at a fixed periodic rate. If enabled (by setting RTIE = 1), this interrupt will occur at the rate selected by the RTICTL register. The RTI runs with a gated OSCCLK. At the end of the RTI time-out period the RTIF flag is set to 1 and a new RTI time-out period starts immediately.

A write to the RTICTL register restarts the RTI time-out period.

If the PRE bit is set, the RTI will continue to run in pseudo stop mode.

2.4.2 Operating Modes

2.4.2.1 Normal Mode

The CRG block behaves as described within this specification in all normal modes.

1. A Clock Monitor Reset will always set the SCME bit to logical 1.

2.4.2.2 Self Clock Mode

The VCO has a minimum operating frequency, f_{SCM}. If the external clock frequency is not available due to a failure or due to long crystal start-up time, the bus clock and the core clock are derived from the VCO running at minimum operating frequency; this mode of operation is called self clock mode. This requires CME = 1 and SCME = 1. If the MCU was clocked by the PLL clock prior to entering self clock mode, the PLLSEL bit will be cleared. If the external clock signal has stabilized again, the CRG will automatically select OSCCLK to be the system clock and return to normal mode. Section 2.4.1.4, "Clock Quality Checker" for more information on entering and leaving self clock mode.

NOTE

In order to detect a potential clock loss the CME bit should be always enabled (CME = 1)!

If CME bit is disabled and the MCU is configured to run on PLL clock (PLLCLK), a loss of external clock (OSCCLK) will not be detected and will cause the system clock to drift towards the VCO's minimum frequency f_{SCM}. As soon as the external clock is available again the system clock ramps up to its PLL target frequency. If the MCU is running on external clock any loss of clock will cause the system to go static.

2.4.3 Low Power Options

This section summarizes the low power options available in the CRG.

2.4.3.1 Run Mode

The RTI can be stopped by setting the associated rate select bits to 0.

The COP can be stopped by setting the associated rate select bits to 0.

2.4.3.2 Wait Mode

The WAI instruction puts the MCU in a low power consumption stand-by mode depending on setting of the individual bits in the CLKSEL register. All individual wait mode configuration bits can be superposed. This provides enhanced granularity in reducing the level of power consumption during wait mode. Table 2-11 lists the individual configuration bits and the parts of the MCU that are affected in wait mode

Table 2-11. MCU Configuration During Wait Mode

	PLLWAI	RTIWAI	COPWAI
PLL	Stopped	—	—
RTI	—	Stopped	—
COP	—	—	Stopped

After executing the WAI instruction the core requests the CRG to switch MCU into wait mode. The CRG then checks whether the PLLWAI bit is asserted (Figure 2-21). Depending on the configuration, the CRG switches the system and core clocks to OSCCLK by clearing the PLLSEL bit and disables the PLL. As soon as all clocks are switched off wait mode is active.

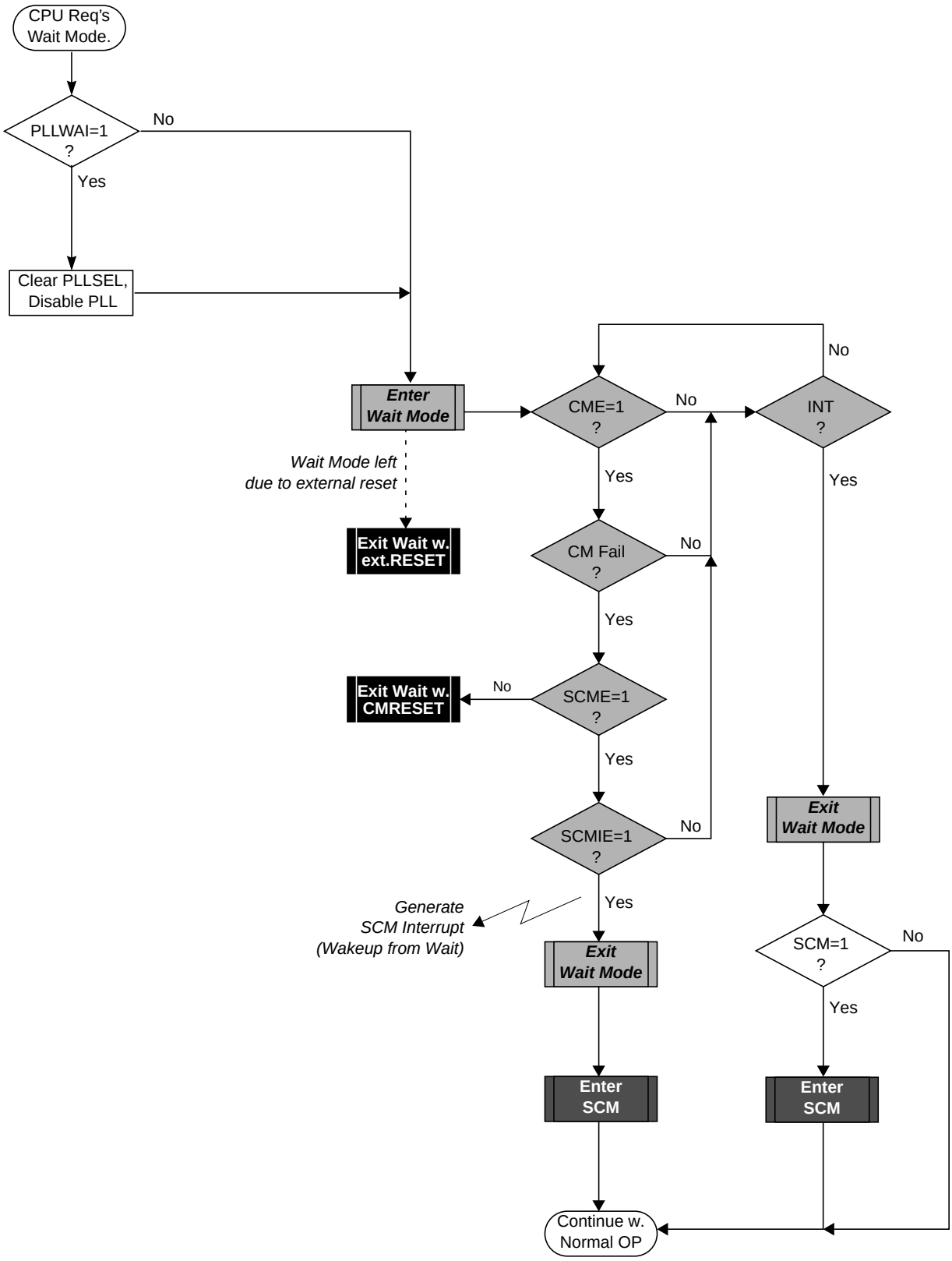

Figure 2-21. Wait Mode Entry/Exit Sequence

There are four different scenarios for the CRG to restart the MCU from wait mode:

- External reset
- Clock monitor reset
- COP reset
- Any interrupt

If the MCU gets an external reset or COP reset during wait mode active, the CRG asynchronously restores all configuration bits in the register space to its default settings and starts the reset generator. After completing the reset sequence processing begins by fetching the normal or COP reset vector. Wait mode is left and the MCU is in run mode again.

If the clock monitor is enabled (CME = 1) the MCU is able to leave wait mode when loss of oscillator/external clock is detected by a clock monitor fail. If the SCME bit is not asserted the CRG generates a clock monitor fail reset (CMRESET). The CRG's behavior for CMRESET is the same compared to external reset, but another reset vector is fetched after completion of the reset sequence. If the SCME bit is asserted the CRG generates a SCM interrupt if enabled (SCMIE = 1). After generating the interrupt the CRG enters self-clock mode and starts the clock quality checker (Section 2.4.1.4, "Clock Quality Checker"). Then the MCU continues with normal operation.If the SCM interrupt is blocked by SCMIE = 0, the SCMIF flag will be asserted and clock quality checks will be performed but the MCU will not wake-up from wait-mode.

If any other interrupt source (e.g., RTI) triggers exit from wait mode, the MCU immediately continues with normal operation. If the PLL has been powered-down during wait mode, the PLLSEL bit is cleared and the MCU runs on OSCCLK after leaving wait mode. The software must manually set the PLLSEL bit again, in order to switch system and core clocks to the PLLCLK.

If wait mode is entered from self-clock mode the CRG will continue to check the clock quality until clock check is successful. The PLL and voltage regulator (VREG) will remain enabled.

Table 2-12 summarizes the outcome of a clock loss while in wait mode.

2.4.3.3 System Stop Mode

All clocks are stopped in STOP mode, dependent of the setting of the PCE, PRE, and PSTP bit. The oscillator is disabled in STOP mode unless the PSTP bit is set. All counters and dividers remain frozen but do not initialize. If the PRE or PCE bits are set, the RTI or COP continues to run in pseudo stop mode. In addition to disabling system and core clocks the CRG requests other functional units of the MCU (e.g., voltage-regulator) to enter their individual power saving modes (if available). This is the main difference between pseudo stop mode and wait mode.

If the PLLSEL bit is still set when entering stop mode, the CRG will switch the system and core clocks to OSCCLK by clearing the PLLSEL bit. Then the CRG disables the PLL, disables the core clock and finally disables the remaining system clocks. As soon as all clocks are switched off, stop mode is active.

If pseudo stop mode (PSTP = 1) is entered from self-clock mode, the CRG will continue to check the clock quality until clock check is successful. The PLL and the voltage regulator (VREG) will remain enabled. If full stop mode (PSTP = 0) is entered from self-clock mode, an ongoing clock quality check will be stopped. A complete timeout window check will be started when stop mode is left again.

Wake-up from stop mode also depends on the setting of the PSTP bit.

Table 2-12. Outcome of Clock Loss in Wait Mode

CME	SCME	SCMIE	CRG Actions
0	X	X	Clock failure --> No action, clock loss not detected.
1	0	X	Clock failure --> CRG performs Clock Monitor Reset immediately
1	1	0	Clock failure --> Scenario 1: OSCCLK recovers prior to exiting wait mode. – MCU remains in wait mode, – VREG enabled, – PLL enabled, – SCM activated, – Start clock quality check, – Set SCMIF interrupt flag. *Some time later OSCCLK recovers.* – CM no longer indicates a failure, – 4096 OSCCLK cycles later clock quality check indicates clock o.k., – SCM deactivated, – PLL disabled depending on PLLWAI, – VREG remains enabled *(never gets disabled in wait mode)*. – MCU remains in wait mode. *Some time later either a wakeup interrupt occurs (no SCM interrupt)* – Exit wait mode using OSCCLK as system clock (SYSCLK), – Continue normal operation. *or an External Reset is applied.* – Exit wait mode using OSCCLK as system clock, – Start reset sequence. Scenario 2: OSCCLK does not recover prior to exiting wait mode. – MCU remains in wait mode, – VREG enabled, – PLL enabled, – SCM activated, – Start clock quality check, – Set SCMIF interrupt flag, – Keep performing clock quality checks (could continue infinitely) while in wait mode. *Some time later either a wakeup interrupt occurs (no SCM interrupt)* – Exit wait mode in SCM using PLL clock (f_{SCM}) as system clock, – Continue to perform additional clock quality checks until OSCCLK is o.k. again. or an External RESET is applied. – Exit wait mode in SCM using PLL clock (f_{SCM}) as system clock, – Start reset sequence, – Continue to perform additional clock quality checks until OSCCLKis o.k.again.
1	1	1	Clock failure --> – VREG enabled, – PLL enabled, – SCM activated, – Start clock quality check, – SCMIF set. SCMIF generates self clock mode wakeup interrupt. – Exit wait mode in SCM using PLL clock (f_{SCM}) as system clock, – Continue to perform a additional clock quality checks until OSCCLK is o.k. again.

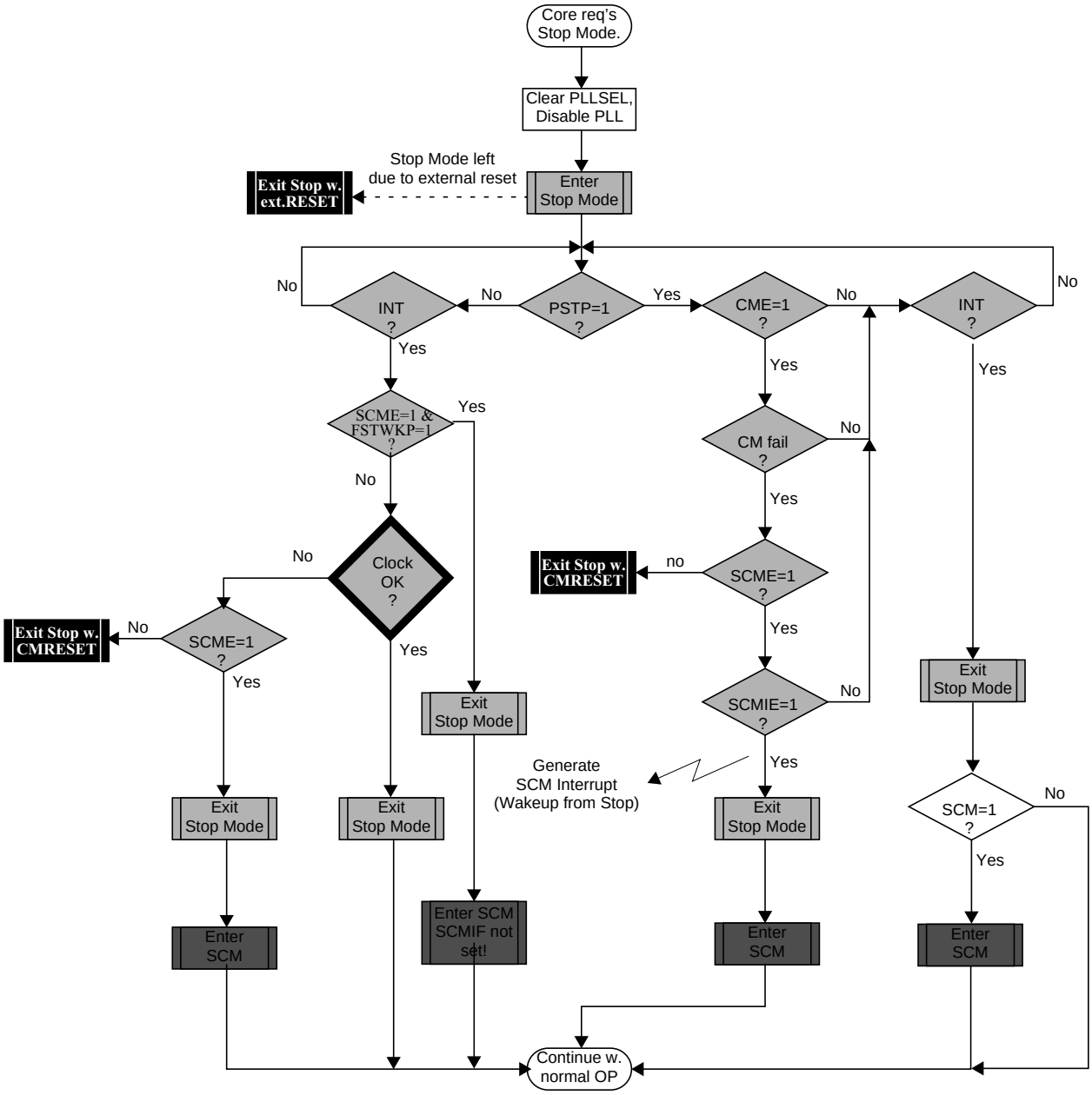

Figure 2-22. Stop Mode Entry/Exit Sequence

2.4.3.3.1 Wake-up from Pseudo Stop Mode (PSTP=1)

Wake-up from pseudo stop mode is the same as wake-up from wait mode. There are also four different scenarios for the CRG to restart the MCU from pseudo stop mode:

- External reset
- Clock monitor fail
- COP reset
- Wake-up interrupt

If the MCU gets an external reset or COP reset during pseudo stop mode active, the CRG asynchronously restores all configuration bits in the register space to its default settings and starts the reset generator. After completing the reset sequence processing begins by fetching the normal or COP reset vector. pseudo stop mode is left and the MCU is in run mode again.

If the clock monitor is enabled (CME = 1), the MCU is able to leave pseudo stop mode when loss of oscillator/external clock is detected by a clock monitor fail. If the SCME bit is not asserted the CRG generates a clock monitor fail reset (CMRESET). The CRG's behavior for CMRESET is the same compared to external reset, but another reset vector is fetched after completion of the reset sequence. If the SCME bit is asserted the CRG generates a SCM interrupt if enabled (SCMIE = 1). After generating the interrupt the CRG enters self-clock mode and starts the clock quality checker (Section 2.4.1.4, "Clock Quality Checker"). Then the MCU continues with normal operation. If the SCM interrupt is blocked by SCMIE=0, the SCMIF flag will be asserted but the CRG will not wake-up from pseudo stop mode.

If any other interrupt source (e.g., RTI) triggers exit from pseudo stop mode, the MCU immediately continues with normal operation. Because the PLL has been powered-down during stop mode, the PLLSEL bit is cleared and the MCU runs on OSCCLK after leaving stop mode. The software must set the PLLSEL bit again, in order to switch system and core clocks to the PLLCLK.

Table 2-13 summarizes the outcome of a clock loss while in pseudo stop mode.

Table 2-13. Outcome of Clock Loss in Pseudo Stop Mode

CME	SCME	SCMIE	CRG Actions
0	X	X	Clock failure --> No action, clock loss not detected.
1	0	X	Clock failure --> CRG performs Clock Monitor Reset immediately
1	1	0	Clock Monitor failure --> Scenario 1: OSCCLK **recovers** prior to exiting pseudo stop mode. – MCU remains in pseudo stop mode, – VREG enabled, – PLL enabled, – SCM activated, – Start clock quality check, – Set SCMIF interrupt flag. *Some time later OSCCLK recovers.* – CM no longer indicates a failure, – 4096 OSCCLK cycles later clock quality check indicates clock o.k., – SCM deactivated, – PLL disabled, – VREG disabled. – MCU remains in pseudo stop mode. *Some time later either a wakeup interrupt occurs (no SCM interrupt)* – Exit pseudo stop mode using OSCCLK as system clock (SYSCLK), – Continue normal operation. *or an External Reset is applied.* – Exit pseudo stop mode using OSCCLK as system clock, – Start reset sequence. Scenario 2: OSCCLK **does not recover** prior to exiting pseudo stop mode. – MCU remains in pseudo stop mode, – VREG enabled, – PLL enabled, – SCM activated, – Start clock quality check, – Set SCMIF interrupt flag, – Keep performing clock quality checks (could continue infinitely) while in pseudo stop mode. *Some time later either a wakeup interrupt occurs (no SCM interrupt)* – Exit pseudo stop mode in SCM using PLL clock (f_{SCM}) as system clock – Continue to perform additional clock quality checks until OSCCLK is o.k. again. or an External RESET is applied. – Exit pseudo stop mode in SCM using PLL clock (f_{SCM}) as system clock – Start reset sequence, – Continue to perform additional clock quality checks until OSCCLK is o.k.again.
1	1	1	Clock failure --> – VREG enabled, – PLL enabled, – SCM activated, – Start clock quality check, – SCMIF set. SCMIF generates self clock mode wakeup interrupt. – Exit pseudo stop mode in SCM using PLL clock (f_{SCM}) as system clock, – Continue to perform a additional clock quality checks until OSCCLK is o.k. again.

2.4.3.3.2 Wake-up from Full Stop (PSTP = 0)

The MCU requires an external interrupt or an external reset in order to wake-up from stop-mode.

If the MCU gets an external reset during full stop mode active, the CRG asynchronously restores all configuration bits in the register space to its default settings and will perform a maximum of 50 clock *check_windows* (see Section 2.4.1.4, “Clock Quality Checker”). After completing the clock quality check the CRG starts the reset generator. After completing the reset sequence processing begins by fetching the normal reset vector. Full stop-mode is left and the MCU is in run mode again.

If the MCU is woken-up by an interrupt and the fast wake-up feature is disabled (FSTWKP = 0 or SCME = 0), the CRG will also perform a maximum of 50 clock *check_window*s (see Section 2.4.1.4, “Clock Quality Checker”). If the clock quality check is successful, the CRG will release all system and core clocks and will continue with normal operation. If all clock checks within the Timeout-Window are failing, the CRG will switch to self-clock mode or generate a clock monitor reset (CMRESET) depending on the setting of the SCME bit.

If the MCU is woken-up by an interrupt and the fast wake-up feature is enabled (FSTWKP = 1 and SCME = 1), the system will immediately resume operation in self-clock mode (see Section 2.4.1.4, “Clock Quality Checker”). The SCMIF flag will not be set. The system will remain in self-clock mode with oscillator disabled until FSTWKP bit is cleared. The clearing of FSTWKP will start the oscillator and the clock quality check. If the clock quality check is successful, the CRG will switch all system clocks to oscillator clock. The SCMIF flag will be set. See application examples in Figure 2-23 and Figure 2-24.

Because the PLL has been powered-down during stop-mode the PLLSEL bit is cleared and the MCU runs on OSCCLK after leaving stop-mode. The software must manually set the PLLSEL bit again, in order to switch system and core clocks to the PLLCLK.

NOTE

In full stop mode or self-clock mode caused by the fast wake-up feature, the clock monitor and the oscillator are disabled.

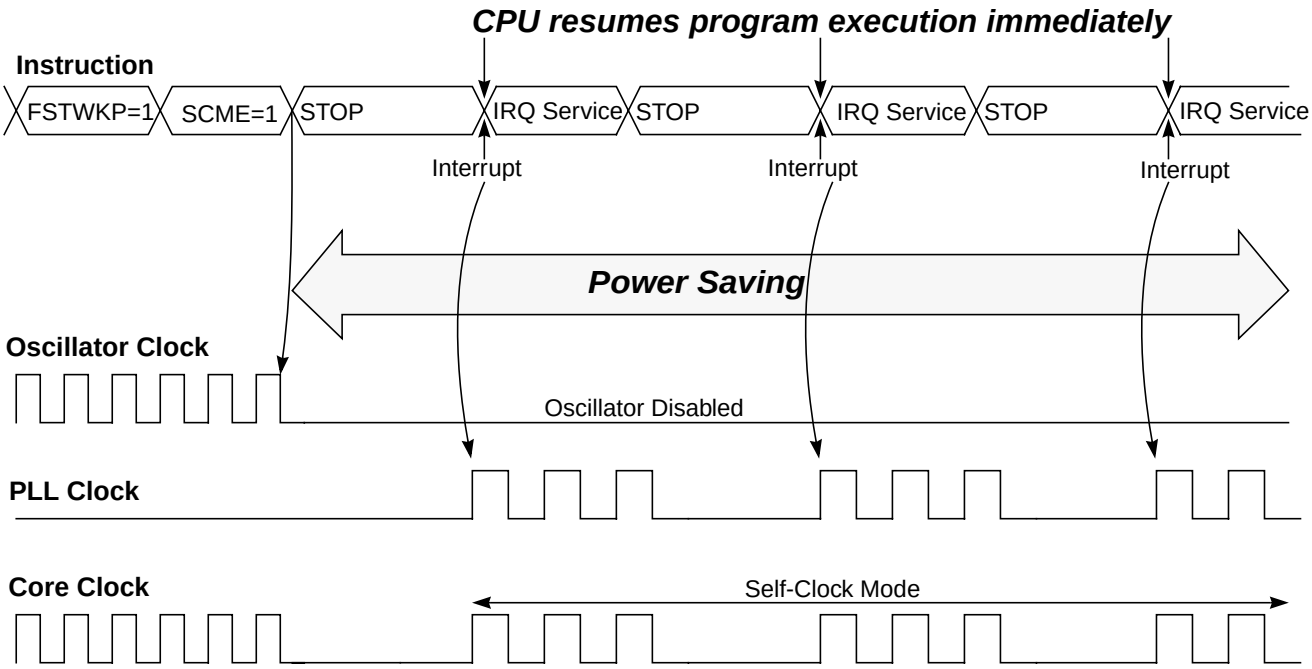

Figure 2-23. Fast Wake-up from Full Stop Mode: Example 1

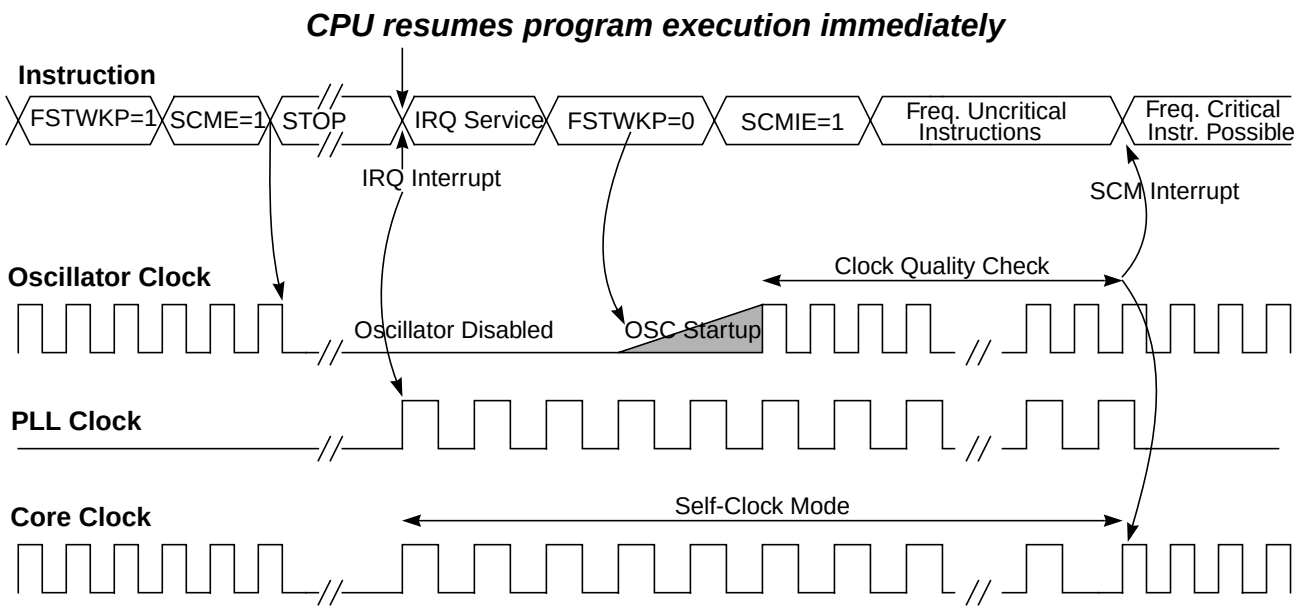

Figure 2-24. Fast Wake-up from Full Stop Mode: Example 2

2.5 Resets

This section describes how to reset the CRG, and how the CRG itself controls the reset of the MCU. It explains all special reset requirements. Since the reset generator for the MCU is part of the CRG, this section also describes all automatic actions that occur during or as a result of individual reset conditions. The reset values of registers and signals are provided in Section 2.3, "Memory Map and Register Definition". All reset sources are listed in Table 2-14. Refer to MCU specification for related vector addresses and priorities.

Table 2-14. Reset Summary

Reset Source	Local Enable
Power on Reset	None
Low Voltage Reset	None
External Reset	None
Illegal Address Reset	None
Clock Monitor Reset	PLLCTL (CME = 1, SCME = 0)
COP Watchdog Reset	COPCTL (CR[2:0] nonzero)

2.5.1 Description of Reset Operation

The reset sequence is initiated by any of the following events:

- Low level is detected at the $\overline{\text{RESET}}$ pin (external reset)
- Power on is detected
- Low voltage is detected
- Illegal Address Reset is detected (see S12XMMC Block Guide for details)
- COP watchdog times out
- Clock monitor failure is detected and self-clock mode was disabled (SCME=0)

Upon detection of any reset event, an internal circuit drives the $\overline{\text{RESET}}$ pin low for 128 SYSCLK cycles (see Figure 2-25). Since entry into reset is asynchronous, it does not require a running SYSCLK. However, the internal reset circuit of the CRG cannot sequence out of current reset condition without a running SYSCLK. The number of 128 SYSCLK cycles might be increased by n = 3 to 6 additional SYSCLK cycles depending on the internal synchronization latency. After 128 + n SYSCLK cycles the $\overline{\text{RESET}}$ pin is released. The reset generator of the CRG waits for additional 64 SYSCLK cycles and then samples the RESET pin to determine the originating source. Table 2-15 shows which vector will be fetched.

Table 2-15. Reset Vector Selection

Sampled $\overline{\text{RESET}}$ Pin (64 cycles after release)	Clock Monitor Reset Pending	COP Reset Pending	Vector Fetch
1	0	0	POR / LVR / Illegal Address Reset / External Reset
1	1	X	Clock Monitor Reset
1	0	1	COP Reset
0	X	X	POR / LVR / Illegal Address Reset / External Reset with rise of $\overline{\text{RESET}}$ pin

NOTE

External circuitry connected to the $\overline{\text{RESET}}$ pin should not include a large capacitance that would interfere with the ability of this signal to rise to a valid logic 1 within 64 SYSCLK cycles after the low drive is released.

The internal reset of the MCU remains asserted while the reset generator completes the 192 SYSCLK long reset sequence. The reset generator circuitry always makes sure the internal reset is deasserted synchronously after completion of the 192 SYSCLK cycles. In case the $\overline{\text{RESET}}$ pin is externally driven low for more than these 192 SYSCLK cycles (external reset), the internal reset remains asserted too.

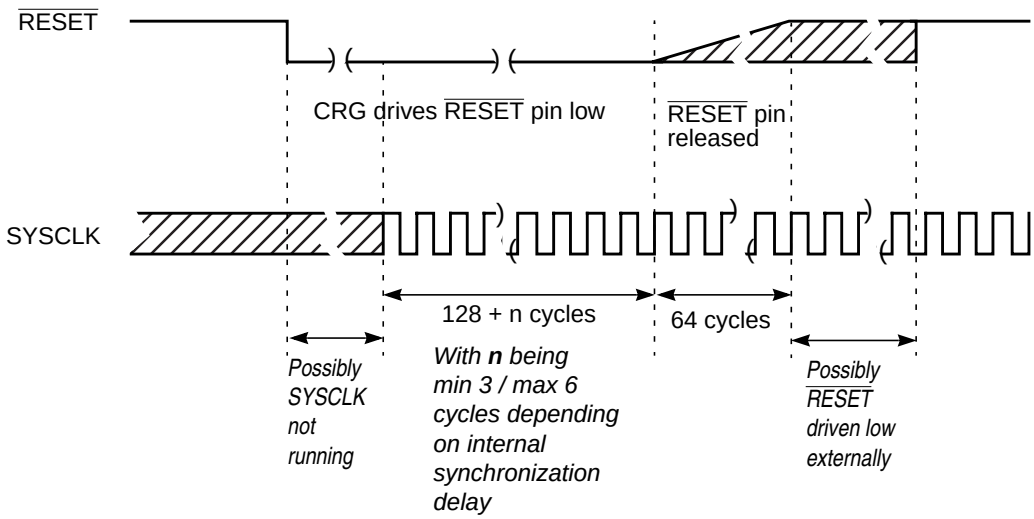

Figure 2-25. RESET Timing

2.5.2 Clock Monitor Reset

The CRG generates a clock monitor reset in case all of the following conditions are true:

- Clock monitor is enabled (CME = 1)
- Loss of clock is detected
- Self-clock mode is disabled (SCME = 0).

The reset event asynchronously forces the configuration registers to their default settings (see Section 2.3, "Memory Map and Register Definition"). In detail the CME and the SCME are reset to logical '1' (which doesn't change the state of the CME bit, because it has already been set). As a consequence the CRG immediately enters self clock mode and starts its internal reset sequence. In parallel the clock quality check starts. As soon as clock quality check indicates a valid oscillator clock the CRG switches to OSCCLK and leaves self clock mode. Since the clock quality checker is running in parallel to the reset generator, the CRG may leave self clock mode while still completing the internal reset sequence. When the reset sequence is finished, the CRG checks the internally latched state of the clock monitor fail circuit. If a clock monitor fail is indicated, processing begins by fetching the clock monitor reset vector.

2.5.3 Computer Operating Properly Watchdog (COP) Reset

When COP is enabled, the CRG expects sequential write of 0x_55 and 0x_AA (in this order) to the ARMCOP register during the selected time-out period. Once this is done, the COP time-out period restarts. If the program fails to do this the CRG will generate a reset. Also, if any value other than 0x_55 or 0x_AA is written, the CRG immediately generates a reset. In case windowed COP operation is enabled writes (0x_55 or 0x_AA) to the ARMCOP register must occur in the last 25% of the selected time-out period. A premature write the CRG will immediately generate a reset.

As soon as the reset sequence is completed the reset generator checks the reset condition. If no clock monitor failure is indicated and the latched state of the COP timeout is true, processing begins by fetching the COP vector.

2.5.4 Power On Reset, Low Voltage Reset

The on-chip voltage regulator detects when V_{DD} to the MCU has reached a certain level and asserts power on reset or low voltage reset or both. As soon as a power on reset or low voltage reset is triggered the CRG performs a quality check on the incoming clock signal. As soon as clock quality check indicates a valid oscillator clock signal, the reset sequence starts using the oscillator clock. If after 50 check windows the clock quality check indicated a non-valid oscillator clock, the reset sequence starts using self-clock mode.

Figure 2-26 and Figure 2-27 show the power-up sequence for cases when the $\overline{\text{RESET}}$ pin is tied to V_{DD} and when the $\overline{\text{RESET}}$ pin is held low.

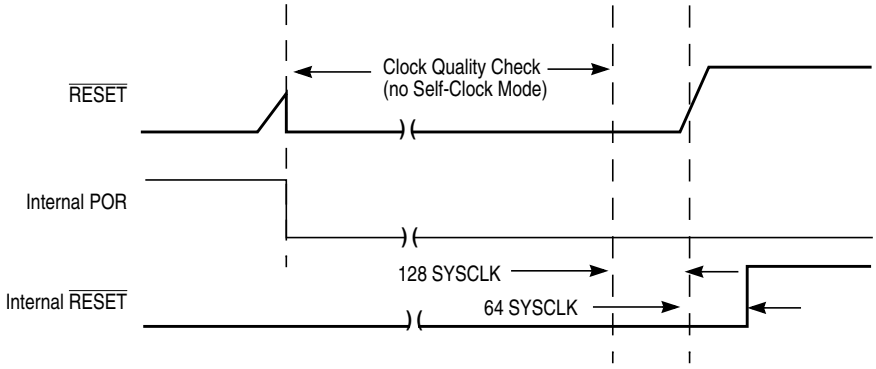

Figure 2-26. $\overline{\text{RESET}}$ Pin Tied to V_{DD} (by a pull-up resistor)

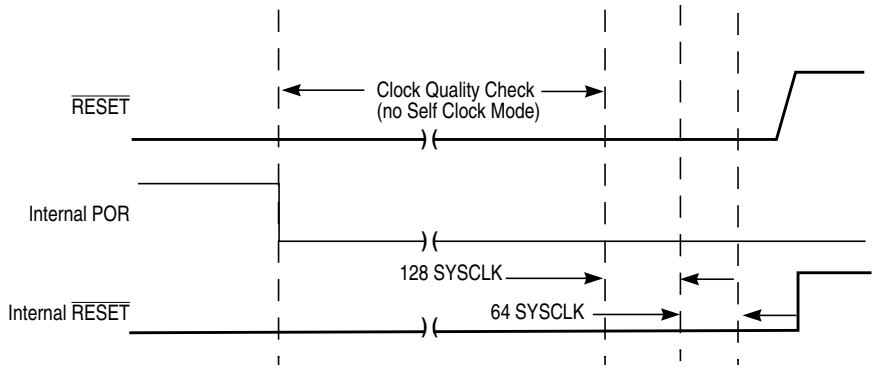

Figure 2-27. $\overline{\text{RESET}}$ Pin Held Low Externally

2.6 Interrupts

The interrupts/reset vectors requested by the CRG are listed in Table 2-16. Refer to MCU specification for related vector addresses and priorities.

Table 2-16. CRG Interrupt Vectors

Interrupt Source	CCR Mask	Local Enable
Real time interrupt	I bit	CRGINT (RTIE)
LOCK interrupt	I bit	CRGINT (LOCKIE)
SCM interrupt	I bit	CRGINT (SCMIE)

2.6.1 Real Time Interrupt

The CRG generates a real time interrupt when the selected interrupt time period elapses. RTI interrupts are locally disabled by setting the RTIE bit to 0. The real time interrupt flag (RTIF) is set to1 when a timeout occurs, and is cleared to 0 by writing a 1 to the RTIF bit.

The RTI continues to run during pseudo stop mode if the PRE bit is set to 1. This feature can be used for periodic wakeup from pseudo stop if the RTI interrupt is enabled.

2.6.2 PLL Lock Interrupt

The CRG generates a PLL Lock interrupt when the LOCK condition of the PLL has changed, either from a locked state to an unlocked state or vice versa. Lock interrupts are locally disabled by setting the LOCKIE bit to 0. The PLL Lock interrupt flag (LOCKIF) is set to1 when the LOCK condition has changed, and is cleared to 0 by writing a 1 to the LOCKIF bit.

2.6.3 Self Clock Mode Interrupt

The CRG generates a self clock mode interrupt when the SCM condition of the system has changed, either entered or exited self clock mode. SCM conditions can only change if the self clock mode enable bit (SCME) is set to 1. SCM conditions are caused by a failing clock quality check after power on reset (POR) or low voltage reset (LVR) or recovery from full stop mode (PSTP = 0) or clock monitor failure. For details on the clock quality check refer to Section 2.4.1.4, “Clock Quality Checker”. If the clock monitor is enabled (CME = 1) a loss of external clock will also cause a SCM condition (SCME = 1).

SCM interrupts are locally disabled by setting the SCMIE bit to 0. The SCM interrupt flag (SCMIF) is set to1 when the SCM condition has changed, and is cleared to 0 by writing a 1 to the SCMIF bit.

Chapter 3
Pierce Oscillator (S12XOSCLCPV1)

3.1 Introduction

The Pierce oscillator (XOSC) module provides a robust, low-noise and low-power clock source. The module will be operated from the V_{DDPLL} supply rail (2.5 V nominal) and require the minimum number of external components. It is designed for optimal start-up margin with typical crystal oscillators.

3.1.1 Features

The XOSC will contain circuitry to dynamically control current gain in the output amplitude. This ensures a signal with low harmonic distortion, low power and good noise immunity.

- High noise immunity due to input hysteresis
- Low RF emissions with peak-to-peak swing limited dynamically
- Transconductance (gm) sized for optimum start-up margin for typical oscillators
- Dynamic gain control eliminates the need for external current limiting resistor
- Integrated resistor eliminates the need for external bias resistor
- Low power consumption:
  - Operates from 2.5 V (nominal) supply
  - Amplitude control limits power
- Clock monitor

3.1.2 Modes of Operation

Two modes of operation exist:

1. Loop controlled Pierce oscillator
2. External square wave mode featuring also full swing Pierce without internal feedback resistor

3.1.3 Block Diagram

Figure 3-1 shows a block diagram of the XOSC.

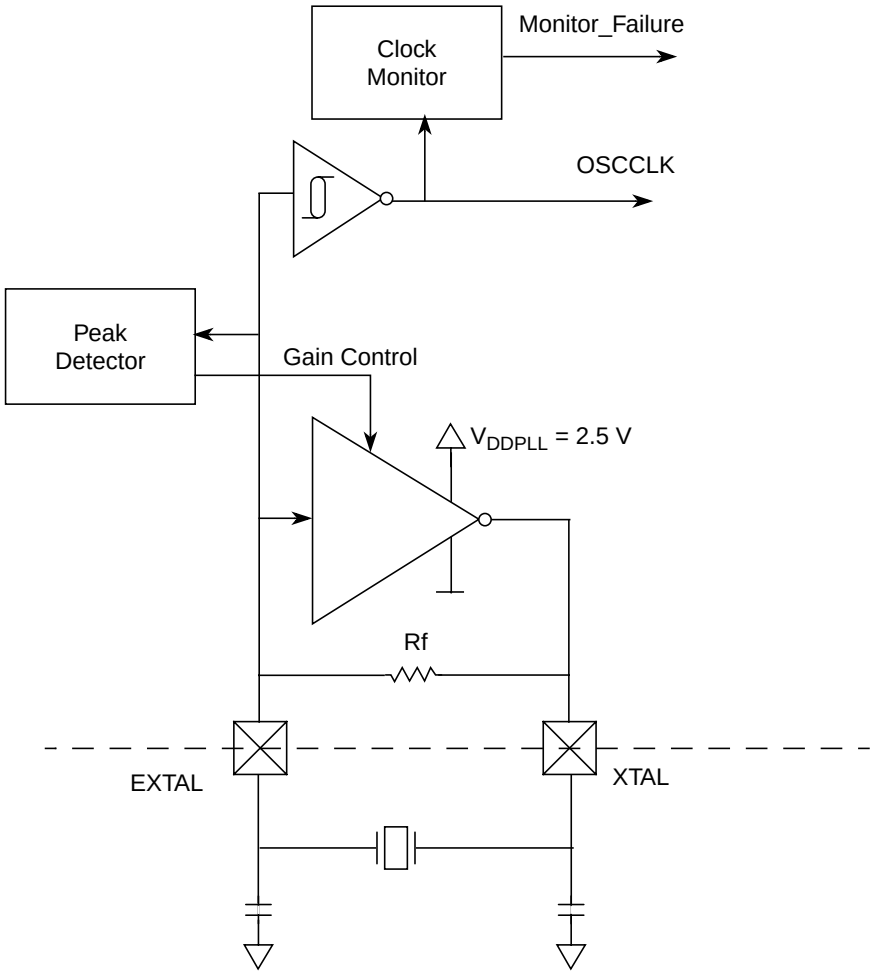

Figure 3-1. XOSC Block Diagram

3.2 External Signal Description

This section lists and describes the signals that connect off chip

3.2.1 V_{DDPLL} and V_{SSPLL} — Operating and Ground Voltage Pins

Theses pins provides operating voltage (V_{DDPLL}) and ground (V_{SSPLL}) for the XOSC circuitry. This allows the supply voltage to the XOSC to be independently bypassed.

3.2.2 EXTAL and XTAL — Input and Output Pins

These pins provide the interface for either a crystal or a CMOS compatible clock to control the internal clock generator circuitry. EXTAL is the external clock input or the input to the crystal oscillator amplifier. XTAL is the output of the crystal oscillator amplifier. The MCU internal system clock is derived from the

EXTAL input frequency. In full stop mode (PSTP = 0), the EXTAL pin is pulled down by an internal resistor of typical 200 kΩ.

NOTE

Freescale recommends an evaluation of the application board and chosen resonator or crystal by the resonator or crystal supplier.

Loop controlled circuit is not suited for overtone resonators and crystals.

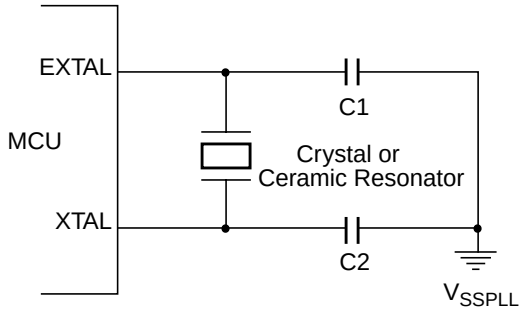

Figure 3-2. Loop Controlled Pierce Oscillator Connections ($\overline{XCLKS}$ = 1)

NOTE

Full swing Pierce circuit is not suited for overtone resonators and crystals without a careful component selection.

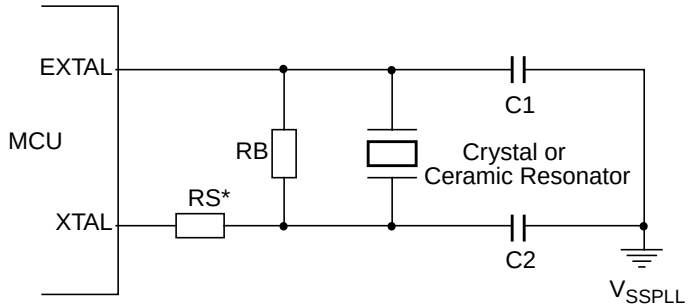

* R_S can be zero (shorted) when use with higher frequency crystals. Refer to manufacturer's data.

Figure 3-3. Full Swing Pierce Oscillator Connections ($\overline{XCLKS}$ = 0)

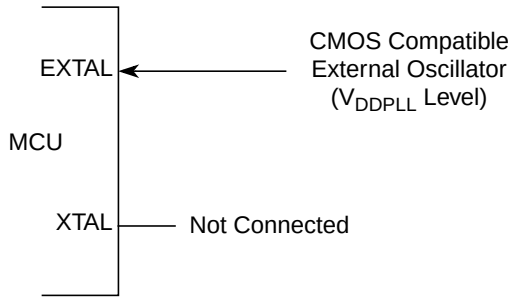

Figure 3-4. External Clock Connections ($\overline{XCLKS}$ = 0)

3.2.3 $\overline{\text{XCLKS}}$ — Input Signal

The $\overline{\text{XCLKS}}$ is an input signal which controls whether a crystal in combination with the internal loop controlled (low power) Pierce oscillator is used or whether full swing Pierce oscillator/external clock circuitry is used. Refer to the Device Overview chapter for polarity and sampling conditions of the $\overline{\text{XCLKS}}$ pin. Table 3-1 lists the state coding of the sampled $\overline{\text{XCLKS}}$ signal.

Table 3-1. Clock Selection Based on $\overline{\text{XCLKS}}$

$\overline{\text{XCLKS}}$	Description
1	Loop controlled Pierce oscillator selected
0	Full swing Pierce oscillator/external clock selected

3.3 Memory Map and Register Definition

The CRG contains the registers and associated bits for controlling and monitoring the oscillator module.

3.4 Functional Description

The XOSC module has control circuitry to maintain the crystal oscillator circuit voltage level to an optimal level which is determined by the amount of hysteresis being used and the maximum oscillation range.

The oscillator block has two external pins, EXTAL and XTAL. The oscillator input pin, EXTAL, is intended to be connected to either a crystal or an external clock source. The selection of loop controlled Pierce oscillator or full swing Pierce oscillator/external clock depends on the XCLKS signal which is sampled during reset. The XTAL pin is an output signal that provides crystal circuit feedback.

A buffered EXTAL signal becomes the internal clock. To improve noise immunity, the oscillator is powered by the V_{DDPLL} and V_{SSPLL} power supply pins.

3.4.1 Gain Control

A closed loop control system will be utilized whereby the amplifier is modulated to keep the output waveform sinusoidal and to limit the oscillation amplitude. The output peak to peak voltage will be kept above twice the maximum hysteresis level of the input buffer. Electrical specification details are provided in the Electrical Characteristics appendix.

3.4.2 Clock Monitor

The clock monitor circuit is based on an internal RC time delay so that it can operate without any MCU clocks. If no OSCCLK edges are detected within this RC time delay, the clock monitor indicates failure which asserts self-clock mode or generates a system reset depending on the state of SCME bit. If the clock monitor is disabled or the presence of clocks is detected no failure is indicated.The clock monitor function is enabled/disabled by the CME control bit, described in the CRG block description chapter.

3.4.3 Wait Mode Operation

During wait mode, XOSC is not impacted.

3.4.4 Stop Mode Operation

XOSC is placed in a static state when the part is in stop mode except when pseudo-stop mode is enabled. During pseudo-stop mode, XOSC is not impacted.

Chapter 4
Analog-to-Digital Converter (ATD10B16CV4) Block Description

4.1 Introduction

The ATD10B16C is a 16-channel, 10-bit, multiplexed input successive approximation analog-to-digital converter. Refer to the Electrical Specifications chapter for ATD accuracy.

4.1.1 Features

- 8-/10-bit resolution
- 7 µs, 10-bit single conversion time
- Sample buffer amplifier
- Programmable sample time
- Left/right justified, signed/unsigned result data
- External trigger control
- Conversion completion interrupt generation
- Analog input multiplexer for 16 analog input channels
- Analog/digital input pin multiplexing
- 1 to 16 conversion sequence lengths
- Continuous conversion mode
- Multiple channel scans
- Configurable external trigger functionality on any AD channel or any of four additional trigger inputs. The four additional trigger inputs can be chip external or internal. Refer to device specification for availability and connectivity
- Configurable location for channel wrap around (when converting multiple channels in a sequence)

4.1.2 Modes of Operation

There is software programmable selection between performing **single** or **continuous conversion** on a **single channel** or **multiple channels**.

4.1.3 Block Diagram

Refer to Figure 4-1 for a block diagram of the ATD0B16C block.

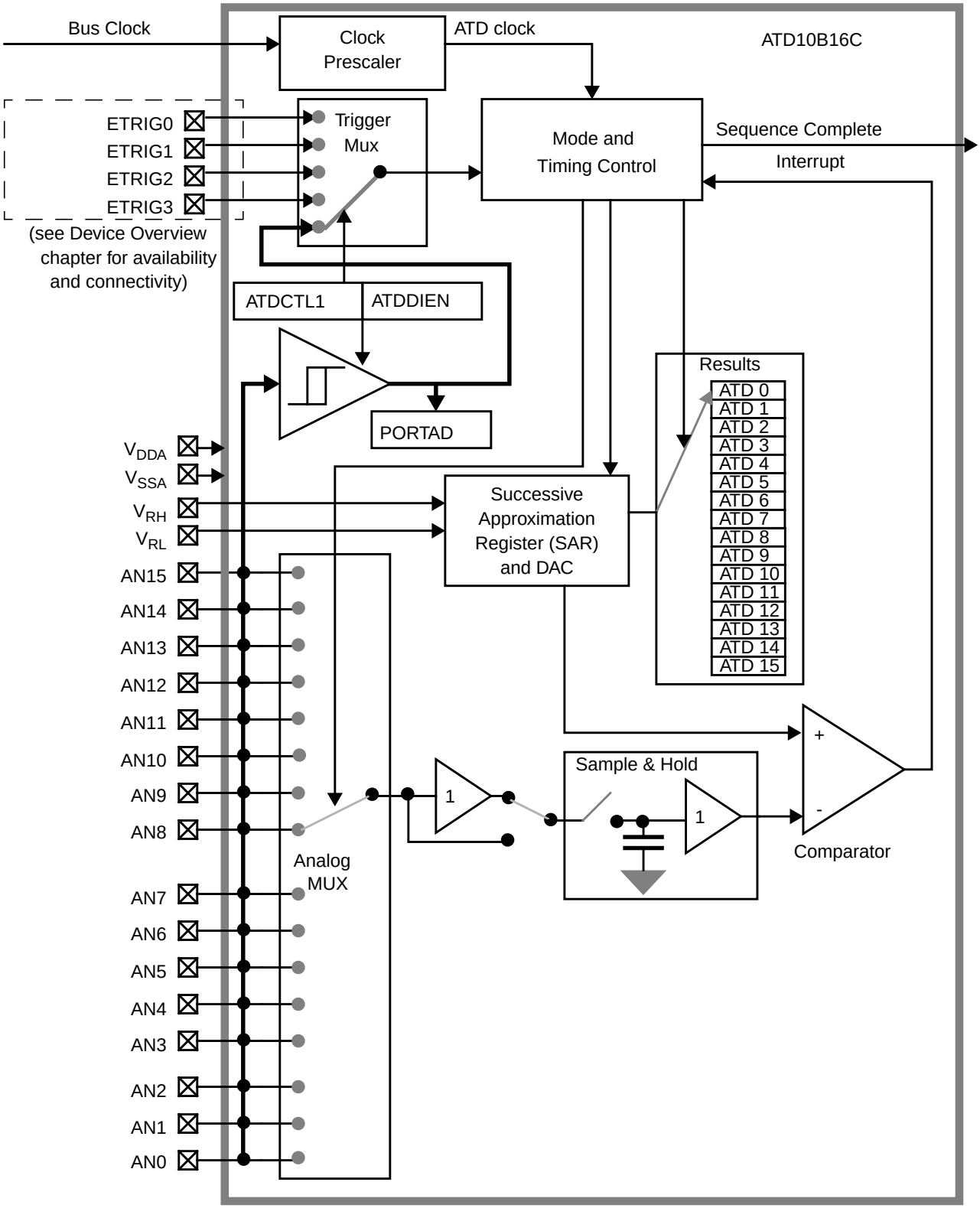

Figure 4-1. ATD10B16C Block Diagram

4.2 External Signal Description

This section lists all inputs to the ATD10B16C block.

4.2.1 AN*x* (*x* = 15, 14, 13, 12, 11, 10, 9, 8, 7, 6, 5, 4, 3, 2, 1, 0) — Analog Input Channel *x* Pins

This pin serves as the analog input channel *x*. It can also be configured as general-purpose digital input and/or external trigger for the ATD conversion.

4.2.2 ETRIG3, ETRIG2, ETRIG1, ETRIG0 — External Trigger Pins

These inputs can be configured to serve as an external trigger for the ATD conversion.

Refer to the Device Overview chapter for availability and connectivity of these inputs.

4.2.3 V_{RH}, V_{RL} — High Reference Voltage Pin, Low Reference Voltage Pin

V_{RH} is the high reference voltage, V_{RL} is the low reference voltage for ATD conversion.

4.2.4 V_{DDA}, V_{SSA} — Analog Circuitry Power Supply Pins

These pins are the power supplies for the analog circuitry of the ATD10B16CV4 block.

4.3 Memory Map and Register Definition

This section provides a detailed description of all registers accessible in the ATD10B16C.

4.3.1 Module Memory Map

Table 4-1 gives an overview of all ATD10B16C registers

Table 4-1. ATD10B16CV4 Memory Map

Address Offset	Use	Access
0x0000	ATD Control Register 0 (ATDCTL0)	R/W
0x0001	ATD Control Register 1 (ATDCTL1)	R/W
0x0002	ATD Control Register 2 (ATDCTL2)	R/W
0x0003	ATD Control Register 3 (ATDCTL3)	R/W
0x0004	ATD Control Register 4 (ATDCTL4)	R/W
0x0005	ATD Control Register 5 (ATDCTL5)	R/W
0x0006	ATD Status Register 0 (ATDSTAT0)	R/W
0x0007	Unimplemented	
0x0008	ATD Test Register 0 (ATDTEST0)[1]	R
0x0009	ATD Test Register 1 (ATDTEST1)	R/W
0x000A	ATD Status Register 2 (ATDSTAT2)	R
0x000B	ATD Status Register 1 (ATDSTAT1)	R
0x000C	ATD Input Enable Register 0 (ATDDIEN0)	R/W
0x000D	ATD Input Enable Register 1 (ATDDIEN1)	R/W
0x000E	Port Data Register 0 (PORTAD0)	R
0x000F	Port Data Register 1 (PORTAD1)	R
0x0010, 0x0011	ATD Result Register 0 (ATDDR0H, ATDDR0L)	R/W
0x0012, 0x0013	ATD Result Register 1 (ATDDR1H, ATDDR1L)	R/W
0x0014, 0x0015	ATD Result Register 2 (ATDDR2H, ATDDR2L)	R/W
0x0016, 0x0017	ATD Result Register 3 (ATDDR3H, ATDDR3L)	R/W
0x0018, 0x0019	ATD Result Register 4 (ATDDR4H, ATDDR4L)	R/W
0x001A, 0x001B	ATD Result Register 5 (ATDDR5H, ATDDR5L)	R/W
0x001C, 0x001D	ATD Result Register 6 (ATDDR6H, ATDDR6L)	R/W
0x001E, 0x001F	ATD Result Register 7 (ATDDR7H, ATDDR7L)	R/W
0x0020, 0x0021	ATD Result Register 8 (ATDDR8H, ATDDR8L)	R/W
0x0022, 0x0023	ATD Result Register 9 (ATDDR9H, ATDDR9L)	R/W
0x0024, 0x0025	ATD Result Register 10 (ATDDR10H, ATDDR10L)	R/W
0x0026, 0x0027	ATD Result Register 11 (ATDDR11H, ATDDR11L)	R/W
0x0028, 0x0029	ATD Result Register 12 (ATDDR12H, ATDDR12L)	R/W
0x002A, 0x002B	ATD Result Register 13 (ATDDR13H, ATDDR13L)	R/W
0x002C, 0x002D	ATD Result Register 14 (ATDDR14H, ATDDR14L)	R/W
0x002E, 0x002F	ATD Result Register 15 (ATDDR15H, ATDDR15L)	R/W

[1] ATDTEST0 is intended for factory test purposes only.

NOTE

Register Address = Base Address + Address Offset, where the Base Address is defined at the MCU level and the Address Offset is defined at the module level.

4.3.2 Register Descriptions

This section describes in address order all the ATD10B16C registers and their individual bits.

Register Name		Bit 7	6	5	4	3	2	1	Bit 0
0x0000 ATDCTL0	R	0	0	0	0	WRAP3	WRAP2	WRAP1	WRAP0
	W								
0x0001 ATDCTL1	R	ETRIGSEL	0	0	0	ETRIGCH3	ETRIGCH2	ETRIGCH1	ETRIGCH0
	W								
0x0002 ATDCTL2	R	ADPU	AFFC	AWAI	ETRIGLE	ETRIGP	ETRIGE	ASCIE	ASCIF
	W								
0x0003 ATDCTL3	R	0	S8C	S4C	S2C	S1C	FIFO	FRZ1	FRZ0
	W								
0x0004 ATDCTL4	R	SRES8	SMP1	SMP0	PRS4	PRS3	PRS2	PRS1	PRS0
	W								
0x0005 ATDCTL5	R	DJM	DSGN	SCAN	MULT	CD	CC	CB	CA
	W								
0x0006 ATDSTAT0	R	SCF	0	ETORF	FIFOR	CC3	CC2	CC1	CC0
	W								
0x0007 Unimplemented	R								
	W								
0x0008 ATDTEST0	R	Unimplemented							
	W								
0x0009 ATDTEST1	R	Unimplemented							SC
	W								
0x000A ATDSTAT2	R	CCF15	CCF14	CCF13	CCF12	CCF11	CCF10	CCF9	CCF8
	W								
0x000B ATDSTAT1	R	CCF7	CCF6	CCF5	CCF4	CCF3	CCF2	CCF1	CCF0
	W								
0x000C ATDDIEN0	R	IEN15	IEN14	IEN13	IEN12	IEN11	IEN10	IEN9	IEN8
	W								

= Unimplemented or Reserved u = Unaffected

Figure 4-2. ATD Register Summary

Register Name		Bit 7	6	5	4	3	2	1	Bit 0
0x000D ATDDIEN1	R/W	IEN7	IEN6	IEN5	IEN4	IEN3	IEN2	IEN1	IEN0
0x000E PORTAD0	R	PTAD15	PTAD14	PTAD13	PTAD12	PTAD11	PTAD10	PTAD9	PTAD8
	W								
0x000F PORTAD1	R	PTAD7	PTAD6	PTAD5	PTAD4	PTAD3	PTAD2	PTAD1	PTAD0
	W								
0x0010–0x002F ATDDRxH–ATDDRxL	R	BIT 9 MSB BIT 7 MSB	BIT 8 BIT 6	BIT 7 BIT 5	BIT 6 BIT 4	BIT 5 BIT 3	BIT 4 BIT 2	BIT 3 BIT 1	BIT 2 BIT 0
	W								
	R	BIT 1 u	BIT 0 u	0 0	0 0	0 0	0 0	0 0	0 0
	W								

= Unimplemented or Reserved u = Unaffected

Figure 4-2. ATD Register Summary (continued)

4.3.2.1 ATD Control Register 0 (ATDCTL0)

Writes to this register will abort current conversion sequence but will not start a new sequence.

	7	6	5	4	3	2	1	0
R	0	0	0	0	WRAP3	WRAP2	WRAP1	WRAP0
W								
Reset	0	0	0	0	1	1	1	1

= Unimplemented or Reserved

Figure 4-3. ATD Control Register 0 (ATDCTL0)

Read: Anytime

Write: Anytime

Table 4-2. ATDCTL0 Field Descriptions

Field	Description
3:0 WRAP[3:0]	**Wrap Around Channel Select Bits** — These bits determine the channel for wrap around when doing multi-channel conversions. The coding is summarized in Table 4-3.

Table 4-3. Multi-Channel Wrap Around Coding

WRAP3	WRAP2	WRAP1	WRAP0	Multiple Channel Conversions (MULT = 1) Wrap Around to AN0 after Converting
0	0	0	0	Reserved
0	0	0	1	AN1
0	0	1	0	AN2
0	0	1	1	AN3
0	1	0	0	AN4
0	1	0	1	AN5
0	1	1	0	AN6
0	1	1	1	AN7
1	0	0	0	AN8
1	0	0	1	AN9
1	0	1	0	AN10
1	0	1	1	AN11
1	1	0	0	AN12
1	1	0	1	AN13
1	1	1	0	AN14
1	1	1	1	AN15

4.3.2.2 ATD Control Register 1 (ATDCTL1)

Writes to this register will abort current conversion sequence but will not start a new sequence.

	7	6	5	4	3	2	1	0
R	ETRIGSEL	0	0	0	ETRIGCH3	ETRIGCH2	ETRIGCH1	ETRIGCH0
W								
Reset	0	0	0	0	1	1	1	1

= Unimplemented or Reserved

Figure 4-4. ATD Control Register 1 (ATDCTL1)

Read: Anytime

Write: Anytime

Table 4-4. ATDCTL1 Field Descriptions

Field	Description
7 ETRIGSEL	**External Trigger Source Select** — This bit selects the external trigger source to be either one of the AD channels or one of the ETRIG[3:0] inputs. See device specification for availability and connectivity of ETRIG[3:0] inputs. If ETRIG[3:0] input option is not available, writing a 1 to ETRISEL only sets the bit but has no effect, that means one of the AD channels (selected by ETRIGCH[3:0]) remains the source for external trigger. The coding is summarized in Table 4-5.
3:0 ETRIGCH[3:0]	**External Trigger Channel Select** — These bits select one of the AD channels or one of the ETRIG[3:0] inputs as source for the external trigger. The coding is summarized in Table 4-5.

Table 4-5. External Trigger Channel Select Coding

ETRIGSEL	ETRIGCH3	ETRIGCH2	ETRIGCH1	ETRIGCH0	External Trigger Source
0	0	0	0	0	AN0
0	0	0	0	1	AN1
0	0	0	1	0	AN2
0	0	0	1	1	AN3
0	0	1	0	0	AN4
0	0	1	0	1	AN5
0	0	1	1	0	AN6
0	0	1	1	1	AN7
0	1	0	0	0	AN8
0	1	0	0	1	AN9
0	1	0	1	0	AN10
0	1	0	1	1	AN11
0	1	1	0	0	AN12
0	1	1	0	1	AN13
0	1	1	1	0	AN14
0	1	1	1	1	AN15
1	0	0	0	0	ETRIG0[1]
1	0	0	0	1	ETRIG1[1]
1	0	0	1	0	ETRIG2[1]
1	0	0	1	1	ETRIG3[1]
1	0	1	X	X	Reserved
1	1	X	X	X	Reserved

[1] Only if ETRIG[3:0] input option is available (see device specification), else ETRISEL is ignored, that means external trigger source remains on one of the AD channels selected by ETRIGCH[3:0]

4.3.2.3 ATD Control Register 2 (ATDCTL2)

This register controls power down, interrupt and external trigger. Writes to this register will abort current conversion sequence but will not start a new sequence.

	7	6	5	4	3	2	1	0
R	ADPU	AFFC	AWAI	ETRIGLE	ETRIGP	ETRIGE	ASCIE	ASCIF
W								
Reset	0	0	0	0	0	0	0	0

= Unimplemented or Reserved

Figure 4-5. ATD Control Register 2 (ATDCTL2)

Read: Anytime

Write: Anytime

Table 4-6. ATDCTL2 Field Descriptions

Field	Description
7 ADPU	**ATD Power Down** — This bit provides on/off control over the ATD10B16C block allowing reduced MCU power consumption. Because analog electronic is turned off when powered down, the ATD requires a recovery time period after ADPU bit is enabled. 0 Power down ATD 1 Normal ATD functionality
6 AFFC	**ATD Fast Flag Clear All** 0 ATD flag clearing operates normally (read the status register ATDSTAT1 before reading the result register to clear the associate CCF flag). 1 Changes all ATD conversion complete flags to a fast clear sequence. Any access to a result register will cause the associate CCF flag to clear automatically.
5 AWAI	**ATD Power Down in Wait Mode** — When entering Wait Mode this bit provides on/off control over the ATD10B16C block allowing reduced MCU power. Because analog electronic is turned off when powered down, the ATD requires a recovery time period after exit from Wait mode. 0 ATD continues to run in Wait mode 1 Halt conversion and power down ATD during Wait mode After exiting Wait mode with an interrupt conversion will resume. But due to the recovery time the result of this conversion should be ignored.
4 ETRIGLE	**External Trigger Level/Edge Control** — This bit controls the sensitivity of the external trigger signal. See Table 4-7 for details.
3 ETRIGP	**External Trigger Polarity** — This bit controls the polarity of the external trigger signal. See Table 4-7 for details.
2 ETRIGE	**External Trigger Mode Enable** — This bit enables the external trigger on one of the AD channels or one of the ETRIG[3:0] inputs as described in Table 4-5. If external trigger source is one of the AD channels, the digital input buffer of this channel is enabled. The external trigger allows to synchronize the start of conversion with external events. 0 Disable external trigger 1 Enable external trigger
1 ASCIE	**ATD Sequence Complete Interrupt Enable** 0 ATD Sequence Complete interrupt requests are disabled. 1 ATD Interrupt will be requested whenever ASCIF = 1 is set.
0 ASCIF	**ATD Sequence Complete Interrupt Flag** — If ASCIE = 1 the ASCIF flag equals the SCF flag (see Section 4.3.2.7, “ATD Status Register 0 (ATDSTAT0)”), else ASCIF reads zero. Writes have no effect. 0 No ATD interrupt occurred 1 ATD sequence complete interrupt pending

Table 4-7. External Trigger Configurations

ETRIGLE	ETRIGP	External Trigger Sensitivity
0	0	Falling Edge
0	1	Ring Edge
1	0	Low Level
1	1	High Level

4.3.2.4 ATD Control Register 3 (ATDCTL3)

This register controls the conversion sequence length, FIFO for results registers and behavior in Freeze Mode. Writes to this register will abort current conversion sequence but will not start a new sequence.

	7	6	5	4	3	2	1	0
R	0	S8C	S4C	S2C	S1C	FIFO	FRZ1	FRZ0
W								
Reset	0	0	1	0	0	0	0	0

= Unimplemented or Reserved

Figure 4-6. ATD Control Register 3 (ATDCTL3)

Read: Anytime

Write: Anytime

Table 4-8. ATDCTL3 Field Descriptions

Field	Description
6 S8C	**Conversion Sequence Length** — This bit controls the number of conversions per sequence. Table 4-9 shows all combinations. At reset, S4C is set to 1 (sequence length is 4). This is to maintain software continuity to HC12 Family.
5 S4C	**Conversion Sequence Length** — This bit controls the number of conversions per sequence. Table 4-9 shows all combinations. At reset, S4C is set to 1 (sequence length is 4). This is to maintain software continuity to HC12 Family.
4 S2C	**Conversion Sequence Length** — This bit controls the number of conversions per sequence. Table 4-9 shows all combinations. At reset, S4C is set to 1 (sequence length is 4). This is to maintain software continuity to HC12 Family.
3 S1C	**Conversion Sequence Length** — This bit controls the number of conversions per sequence. Table 4-9 shows all combinations. At reset, S4C is set to 1 (sequence length is 4). This is to maintain software continuity to HC12 Family.

Table 4-8. ATDCTL3 Field Descriptions (continued)

Field	Description
2 FIFO	**Result Register FIFO Mode** —If this bit is zero (non-FIFO mode), the A/D conversion results map into the result registers based on the conversion sequence; the result of the first conversion appears in the first result register, the second result in the second result register, and so on. If this bit is one (FIFO mode) the conversion counter is not reset at the beginning or ending of a conversion sequence; sequential conversion results are placed in consecutive result registers. In a continuously scanning conversion sequence, the result register counter will wrap around when it reaches the end of the result register file. The conversion counter value (CC3-0 in ATDSTAT0) can be used to determine where in the result register file, the current conversion result will be placed. Aborting a conversion or starting a new conversion by write to an ATDCTL register (ATDCTL5-0) clears the conversion counter even if FIFO=1. So the first result of a new conversion sequence, started by writing to ATDCTL5, will always be place in the first result register (ATDDDR0). Intended usage of FIFO mode is continuos conversion (SCAN=1) or triggered conversion (ETRIG=1). Finally, which result registers hold valid data can be tracked using the conversion complete flags. Fast flag clear mode may or may not be useful in a particular application to track valid data. 0 Conversion results are placed in the corresponding result register up to the selected sequence length. 1 Conversion results are placed in consecutive result registers (wrap around at end).
1:0 FRZ[1:0]	**Background Debug Freeze Enable** — When debugging an application, it is useful in many cases to have the ATD pause when a breakpoint (Freeze Mode) is encountered. These 2 bits determine how the ATD will respond to a breakpoint as shown in Table 4-10. Leakage onto the storage node and comparator reference capacitors may compromise the accuracy of an immediately frozen conversion depending on the length of the freeze period.

Table 4-9. Conversion Sequence Length Coding

S8C	S4C	S2C	S1C	Number of Conversions per Sequence
0	0	0	0	16
0	0	0	1	1
0	0	1	0	2
0	0	1	1	3
0	1	0	0	4
0	1	0	1	5
0	1	1	0	6
0	1	1	1	7
1	0	0	0	8
1	0	0	1	9
1	0	1	0	10
1	0	1	1	11
1	1	0	0	12
1	1	0	1	13
1	1	1	0	14
1	1	1	1	15

Table 4-10. ATD Behavior in Freeze Mode (Breakpoint)

FRZ1	FRZ0	Behavior in Freeze Mode
0	0	Continue conversion
0	1	Reserved
1	0	Finish current conversion, then freeze
1	1	Freeze Immediately

4.3.2.5 ATD Control Register 4 (ATDCTL4)

This register selects the conversion clock frequency, the length of the second phase of the sample time and the resolution of the A/D conversion (i.e., 8-bits or 10-bits). Writes to this register will abort current conversion sequence but will not start a new sequence.

	7	6	5	4	3	2	1	0
R/W	SRES8	SMP1	SMP0	PRS4	PRS3	PRS2	PRS1	PRS0
Reset	0	0	0	0	0	1	0	1

Figure 4-7. ATD Control Register 4 (ATDCTL4)

Read: Anytime

Write: Anytime

Table 4-11. ATDCTL4 Field Descriptions

Field	Description
7 SRES8	**A/D Resolution Select** — This bit selects the resolution of A/D conversion results as either 8 or 10 bits. The A/D converter has an accuracy of 10 bits. However, if low resolution is required, the conversion can be speeded up by selecting 8-bit resolution. 0 10 bit resolution 1 8 bit resolution
6:5 SMP[1:0]	**Sample Time Select** —These two bits select the length of the second phase of the sample time in units of ATD conversion clock cycles. Note that the ATD conversion clock period is itself a function of the prescaler value (bits PRS4-0). The sample time consists of two phases. The first phase is two ATD conversion clock cycles long and transfers the sample quickly (via the buffer amplifier) onto the A/D machine's storage node. The second phase attaches the external analog signal directly to the storage node for final charging and high accuracy. Table 4-12 lists the lengths available for the second sample phase.
4:0 PRS[4:0]	**ATD Clock Prescaler** — These 5 bits are the binary value prescaler value PRS. The ATD conversion clock frequency is calculated as follows: $ATDclock = \frac{[BusClock]}{[PRS+1]} \times 0.5$ **Note:** The maximum ATD conversion clock frequency is half the bus clock. The default (after reset) prescaler value is 5 which results in a default ATD conversion clock frequency that is bus clock divided by 12. Table 4-13 illustrates the divide-by operation and the appropriate range of the bus clock.

Table 4-12. Sample Time Select

SMP1	SMP0	Length of 2nd Phase of Sample Time
0	0	2 A/D conversion clock periods
0	1	4 A/D conversion clock periods
1	0	8 A/D conversion clock periods
1	1	16 A/D conversion clock periods

Table 4-13. Clock Prescaler Values

Prescale Value	Total Divisor Value	Max. Bus Clock[1]	Min. Bus Clock[2]
00000	Divide by 2	4 MHz	1 MHz
00001	Divide by 4	8 MHz	2 MHz
00010	Divide by 6	12 MHz	3 MHz
00011	Divide by 8	16 MHz	4 MHz
00100	Divide by 10	20 MHz	5 MHz
00101	Divide by 12	24 MHz	6 MHz
00110	Divide by 14	28 MHz	7 MHz
00111	Divide by 16	32 MHz	8 MHz
01000	Divide by 18	36 MHz	9 MHz
01001	Divide by 20	40 MHz	10 MHz
01010	Divide by 22	44 MHz	11 MHz
01011	Divide by 24	48 MHz	12 MHz
01100	Divide by 26	52 MHz	13 MHz
01101	Divide by 28	56 MHz	14 MHz
01110	Divide by 30	60 MHz	15 MHz
01111	Divide by 32	64 MHz	16 MHz
10000	Divide by 34	68 MHz	17 MHz
10001	Divide by 36	72 MHz	18 MHz
10010	Divide by 38	76 MHz	19 MHz
10011	Divide by 40	80 MHz	20 MHz
10100	Divide by 42	84 MHz	21 MHz
10101	Divide by 44	88 MHz	22 MHz
10110	Divide by 46	92 MHz	23 MHz
10111	Divide by 48	96 MHz	24 MHz
11000	Divide by 50	100 MHz	25 MHz
11001	Divide by 52	104 MHz	26 MHz
11010	Divide by 54	108 MHz	27 MHz
11011	Divide by 56	112 MHz	28 MHz
11100	Divide by 58	116 MHz	29 MHz
11101	Divide by 60	120 MHz	30 MHz
11110	Divide by 62	124 MHz	31 MHz
11111	Divide by 64	128 MHz	32 MHz

1 Maximum ATD conversion clock frequency is 2 MHz. The maximum allowed bus clock frequency is shown in this column.

2 Minimum ATD conversion clock frequency is 500 kHz. The minimum allowed bus clock frequency is shown in this column.

4.3.2.6 ATD Control Register 5 (ATDCTL5)

This register selects the type of conversion sequence and the analog input channels sampled. Writes to this register will abort current conversion sequence and start a new conversion sequence. If external trigger is enabled (ETRIGE = 1) an initial write to ATDCTL5 is required to allow starting of a conversion sequence which will then occur on each trigger event. Start of conversion means the beginning of the sampling phase.

	7	6	5	4	3	2	1	0
R W	DJM	DSGN	SCAN	MULT	CD	CC	CB	CA
Reset	0	0	0	0	0	0	0	0

Figure 4-8. ATD Control Register 5 (ATDCTL5)

Read: Anytime

Write: Anytime

Table 4-14. ATDCTL5 Field Descriptions

Field	Description
7 DJM	**Result Register Data Justification** — This bit controls justification of conversion data in the result registers. See Section 4.3.2.16, “ATD Conversion Result Registers (ATDDRx)” for details. 0 Left justified data in the result registers. 1 Right justified data in the result registers.
6 DSGN	**Result Register Data Signed or Unsigned Representation** — This bit selects between signed and unsigned conversion data representation in the result registers. Signed data is represented as 2’s complement. Signed data is not available in right justification. See <st-bold>4.3.2.16 ATD Conversion Result Registers (ATDDRx) for details. 0 Unsigned data representation in the result registers. 1 Signed data representation in the result registers. Table 4-15 summarizes the result data formats available and how they are set up using the control bits. Table 4-16 illustrates the difference between the signed and unsigned, left justified output codes for an input signal range between 0 and 5.12 Volts.
5 SCAN	**Continuous Conversion Sequence Mode** — This bit selects whether conversion sequences are performed continuously or only once. If external trigger is enabled (ETRIGE=1) setting this bit has no effect, that means each trigger event starts a single conversion sequence. 0 Single conversion sequence 1 Continuous conversion sequences (scan mode)
4 MULT	**Multi-Channel Sample Mode** — When MULT is 0, the ATD sequence controller samples only from the specified analog input channel for an entire conversion sequence. The analog channel is selected by channel selection code (control bits CD/CC/CB/CA located in ATDCTL5). When MULT is 1, the ATD sequence controller samples across channels. The number of channels sampled is determined by the sequence length value (S8C, S4C, S2C, S1C). The first analog channel examined is determined by channel selection code (CC, CB, CA control bits); subsequent channels sampled in the sequence are determined by incrementing the channel selection code or wrapping around to AN0 (channel 0. 0 Sample only one channel 1 Sample across several channels

Table 4-14. ATDCTL5 Field Descriptions (continued)

Field	Description
3:0 C[D:A}	**Analog Input Channel Select Code** — These bits select the analog input channel(s) whose signals are sampled and converted to digital codes. Table 4-17 lists the coding used to select the various analog input channels. In the case of single channel conversions (MULT = 0), this selection code specified the channel to be examined. In the case of multiple channel conversions (MULT = 1), this selection code represents the first channel to be examined in the conversion sequence. Subsequent channels are determined by incrementing the channel selection code or wrapping around to AN0 (after converting the channel defined by the Wrap Around Channel Select Bits WRAP[3:0] in ATDCTL0). In case starting with a channel number higher than the one defined by WRAP[3:0] the first wrap around will be AN15 to AN0.

Table 4-15. Available Result Data Formats.

SRES8	DJM	DSGN	Result Data Formats Description and Bus Bit Mapping
1	0	0	8-bit / left justified / unsigned — bits 15:8
1	0	1	8-bit / left justified / signed — bits 15:8
1	1	X	8-bit / right justified / unsigned — bits 7:0
0	0	0	10-bit / left justified / unsigned — bits 15:6
0	0	1	10-bit / left justified / signed -— bits 15:6
0	1	X	10-bit / right justified / unsigned — bits 9:0

Table 4-16. Left Justified, Signed and Unsigned ATD Output Codes.

Input Signal V_{RL} = 0 Volts V_{RH} = 5.12 Volts	Signed 8-Bit Codes	Unsigned 8-Bit Codes	Signed 10-Bit Codes	Unsigned 10-Bit Codes
5.120 Volts	7F	FF	7FC0	FFC0
5.100	7F	FF	7F00	FF00
5.080	7E	FE	7E00	FE00
2.580	01	81	0100	8100
2.560	00	80	0000	8000
2.540	FF	7F	FF00	7F00
0.020	81	01	8100	0100
0.000	80	00	8000	0000

Table 4-17. Analog Input Channel Select Coding

CD	CC	CB	CA	Analog Input Channel
0	0	0	0	AN0
0	0	0	1	AN1
0	0	1	0	AN2
0	0	1	1	AN3
0	1	0	0	AN4
0	1	0	1	AN5
0	1	1	0	AN6
0	1	1	1	AN7
1	0	0	0	AN8
1	0	0	1	AN9
1	0	1	0	AN10
1	0	1	1	AN11
1	1	0	0	AN12
1	1	0	1	AN13
1	1	1	0	AN14
1	1	1	1	AN15

4.3.2.7 ATD Status Register 0 (ATDSTAT0)

This read-only register contains the Sequence Complete Flag, overrun flags for external trigger and FIFO mode, and the conversion counter.

	7	6	5	4	3	2	1	0
R	SCF	0	ETORF	FIFOR	CC3	CC2	CC1	CC0
W								
Reset	0	0	0	0	0	0	0	0

= Unimplemented or Reserved

Figure 4-9. ATD Status Register 0 (ATDSTAT0)

Read: Anytime

Write: Anytime (No effect on CC[3:0])

Table 4-18. ATDSTAT0 Field Descriptions

Field	Description
7 SCF	**Sequence Complete Flag** — This flag is set upon completion of a conversion sequence. If conversion sequences are continuously performed (SCAN = 1), the flag is set after each one is completed. This flag is cleared when one of the following occurs: • Write “1” to SCF • Write to ATDCTL5 (a new conversion sequence is started) • If AFFC = 1 and read of a result register 0 Conversion sequence not completed 1 Conversion sequence has completed
5 ETORF	**External Trigger Overrun Flag** —While in edge trigger mode (ETRIGLE = 0), if additional active edges are detected while a conversion sequence is in process the overrun flag is set. This flag is cleared when one of the following occurs: • Write “1” to ETORF • Write to ATDCTL0,1,2,3,4 (a conversion sequence is aborted) • Write to ATDCTL5 (a new conversion sequence is started) 0 No External trigger over run error has occurred 1 External trigger over run error has occurred

Table 4-18. ATDSTAT0 Field Descriptions (continued)

Field	Description
4 FIFOR	**FIFO Over Run Flag** — This bit indicates that a result register has been written to before its associated conversion complete flag (CCF) has been cleared. This flag is most useful when using the FIFO mode because the flag potentially indicates that result registers are out of sync with the input channels. However, it is also practical for non-FIFO modes, and indicates that a result register has been over written before it has been read (i.e., the old data has been lost). This flag is cleared when one of the following occurs: • Write “1” to FIFOR • Start a new conversion sequence (write to ATDCTL5 or external trigger) 0 No over run has occurred 1 Overrun condition exists (result register has been written while associated CCFx flag remained set)
3:0 CC[3:0}	**Conversion Counter** — These 4 read-only bits are the binary value of the conversion counter. The conversion counter points to the result register that will receive the result of the current conversion. For example, CC3 = 0, CC2 = 1, CC1 = 1, CC0 = 0 indicates that the result of the current conversion will be in ATD Result Register 6. If in non-FIFO mode (FIFO = 0) the conversion counter is initialized to zero at the begin and end of the conversion sequence. If in FIFO mode (FIFO = 1) the register counter is not initialized. The conversion counters wraps around when its maximum value is reached. Aborting a conversion or starting a new conversion by write to an ATDCTL register (ATDCTL5-0) clears the conversion counter even if FIFO=1.

4.3.2.8 Reserved Register 0 (ATDTEST0)

	7	6	5	4	3	2	1	0
R	u	u	u	u	u	u	u	u
W								
Reset	1	0	0	0	0	0	0	0

= Unimplemented or Reserved u = Unaffected

Figure 4-10. Reserved Register 0 (ATDTEST0)

Read: Anytime, returns unpredictable values

Write: Anytime in special modes, unimplemented in normal modes

NOTE

Writing to this register when in special modes can alter functionality.

4.3.2.9 ATD Test Register 1 (ATDTEST1)

This register contains the SC bit used to enable special channel conversions.

	7	6	5	4	3	2	1	0
R	u	u	u	u	u	u	u	SC
W								
Reset	0	0	0	0	0	0	0	0

= Unimplemented or Reserved u = Unaffected

Figure 4-11. Reserved Register 1 (ATDTEST1)

Read: Anytime, returns unpredictable values for bit 7 and bit 6

Write: Anytime

NOTE

Writing to this register when in special modes can alter functionality.

Table 4-19. ATDTEST1 Field Descriptions

Field	Description
0 SC	**Special Channel Conversion Bit** — If this bit is set, then special channel conversion can be selected using CC, CB, and CA of ATDCTL5. Table 4-20 lists the coding. 0 Special channel conversions disabled 1 Special channel conversions enabled

Table 4-20. Special Channel Select Coding

SC	CD	CC	CB	CA	Analog Input Channel
1	0	0	X	X	Reserved
1	0	1	0	0	V_{RH}
1	0	1	0	1	V_{RL}
1	0	1	1	0	$(V_{RH}+V_{RL}) / 2$
1	0	1	1	1	Reserved
1	1	X	X	X	Reserved

4.3.2.10 ATD Status Register 2 (ATDSTAT2)

This read-only register contains the Conversion Complete Flags CCF15 to CCF8.

	7	6	5	4	3	2	1	0
R	CCF15	CCF14	CCF13	CCF12	CCF11	CCF10	CCF9	CCF8
W								
Reset	0	0	0	0	0	0	0	0

= Unimplemented or Reserved

Figure 4-12. ATD Status Register 2 (ATDSTAT2)

Read: Anytime

Write: Anytime, no effect

Table 4-21. ATDSTAT2 Field Descriptions

Field	Description
7:0 CCF[15:8]	**Conversion Complete Flag Bits** — A conversion complete flag is set at the end of each conversion in a conversion sequence. The flags are associated with the conversion position in a sequence (and also the result register number). Therefore, CCF8 is set when the ninth conversion in a sequence is complete and the result is available in result register ATDDR8; CCF9 is set when the tenth conversion in a sequence is complete and the result is available in ATDDR9, and so forth. A flag CCFx (x = 15, 14, 13, 12, 11, 10, 9, 8) is cleared when one of the following occurs: • Write to ATDCTL5 (a new conversion sequence is started) • If AFFC = 0 and read of ATDSTAT2 followed by read of result register ATDDRx • If AFFC = 1 and read of result register ATDDRx In case of a concurrent set and clear on CCFx: The clearing by method A) will overwrite the set. The clearing by methods B) or C) will be overwritten by the set. 0 Conversion number x not completed 1 Conversion number x has completed, result ready in ATDDRx

4.3.2.11 ATD Status Register 1 (ATDSTAT1)

This read-only register contains the Conversion Complete Flags CCF7 to CCF0

	7	6	5	4	3	2	1	0
R	CCF7	CCF6	CCF5	CCF4	CCF3	CCF2	CCF1	CCF0
W								
Reset	0	0	0	0	0	0	0	0

= Unimplemented or Reserved

Figure 4-13. ATD Status Register 1 (ATDSTAT1)

Read: Anytime

Write: Anytime, no effect

Table 4-22. ATDSTAT1 Field Descriptions

Field	Description
7:0 CCF[7:0]	**Conversion Complete Flag Bits** — A conversion complete flag is set at the end of each conversion in a conversion sequence. The flags are associated with the conversion position in a sequence (and also the result register number). Therefore, CCF0 is set when the first conversion in a sequence is complete and the result is available in result register ATDDR0; CCF1 is set when the second conversion in a sequence is complete and the result is available in ATDDR1, and so forth. A CCF flag is cleared when one of the following occurs: • Write to ATDCTL5 (a new conversion sequence is started) • If AFFC = 0 and read of ATDSTAT1 followed by read of result register ATDDRx • If AFFC = 1 and read of result register ATDDRx In case of a concurrent set and clear on CCFx: The clearing by method A) will overwrite the set. The clearing by methods B) or C) will be overwritten by the set. Conversion number x not completed Conversion number x has completed, result ready in ATDDRx

4.3.2.12 ATD Input Enable Register 0 (ATDDIEN0)

	7	6	5	4	3	2	1	0
R W	IEN15	IEN14	IEN13	IEN12	IEN11	IEN10	IEN9	IEN8
Reset	0	0	0	0	0	0	0	0

Figure 4-14. ATD Input Enable Register 0 (ATDDIEN0)

Read: Anytime

Write: anytime

Table 4-23. ATDDIEN0 Field Descriptions

Field	Description
7:0 IEN[15:8]	**ATD Digital Input Enable on Channel Bits** — This bit controls the digital input buffer from the analog input pin (ANx) to PTADx data register. 0 Disable digital input buffer to PTADx 1 Enable digital input buffer to PTADx. **Note:** Setting this bit will enable the corresponding digital input buffer continuously. If this bit is set while simultaneously using it as an analog port, there is potentially increased power consumption because the digital input buffer maybe in the linear region.

4.3.2.13 ATD Input Enable Register 1 (ATDDIEN1)

	7	6	5	4	3	2	1	0
R W	IEN7	IEN6	IEN5	IEN4	IEN3	IEN2	IEN1	IEN0
Reset	0	0	0	0	0	0	0	0

Figure 4-15. ATD Input Enable Register 1 (ATDDIEN1)

Read: Anytime

Write: Anytime

Table 4-24. ATDDIEN1 Field Descriptions

Field	Description
7:0 IEN[7:0]	**ATD Digital Input Enable on Channel Bits** — This bit controls the digital input buffer from the analog input pin (ANx) to PTADx data register. 0 Disable digital input buffer to PTADx 1 Enable digital input buffer to PTADx. **Note:** Setting this bit will enable the corresponding digital input buffer continuously. If this bit is set while simultaneously using it as an analog port, there is potentially increased power consumption because the digital input buffer maybe in the linear region.

4.3.2.14 Port Data Register 0 (PORTAD0)

The data port associated with the ATD is input-only. The port pins are shared with the analog A/D inputs AN[15:8].

	7	6	5	4	3	2	1	0
R	PTAD15	PTAD14	PTAD13	PTAD12	PTAD11	PTAD10	PTAD9	PTAD8
W								
Reset	1	1	1	1	1	1	1	1
Pin Function	AN15	AN14	AN13	AN12	AN11	AN10	AN9	AN8

= Unimplemented or Reserved

Figure 4-16. Port Data Register 0 (PORTAD0)

Read: Anytime

Write: Anytime, no effect

The A/D input channels may be used for general-purpose digital input.

Table 4-25. PORTAD0 Field Descriptions

Field	Description
7:0 PTAD[15:8]	**A/D Channel x (ANx) Digital Input Bits**— If the digital input buffer on the ANx pin is enabled (IENx = 1) or channel x is enabled as external trigger (ETRIGE = 1, ETRIGCH[3-0] = x, ETRIGSEL = 0) read returns the logic level on ANx pin (signal potentials not meeting V_{IL} or V_{IH} specifications will have an indeterminate value)). If the digital input buffers are disabled (IENx = 0) and channel x is not enabled as external trigger, read returns a “1”. Reset sets all PORTAD0 bits to “1”.

4.3.2.15 Port Data Register 1 (PORTAD1)

The data port associated with the ATD is input-only. The port pins are shared with the analog A/D inputs AN7-0.

	7	6	5	4	3	2	1	0
R	PTAD7	PTAD6	PTAD5	PTAD4	PTAD3	PTAD2	PTAD1	PTAD0
W								
Reset	1	1	1	1	1	1	1	1
Pin Function	AN 7	AN6	AN5	AN4	AN3	AN2	AN1	AN0

= Unimplemented or Reserved

Figure 4-17. Port Data Register 1 (PORTAD1)

Read: Anytime

Write: Anytime, no effect

The A/D input channels may be used for general-purpose digital input.

Table 4-26. PORTAD1 Field Descriptions

Field	Description
7:0 PTAD[7:8]	**A/D Channel x (ANx) Digital Input Bits** — If the digital input buffer on the ANx pin is enabled (IENx=1) or channel x is enabled as external trigger (ETRIGE = 1, ETRIGCH[3-0] = x, ETRIGSEL = 0) read returns the logic level on ANx pin (signal potentials not meeting V_{IL} or V_{IH} specifications will have an indeterminate value)). If the digital input buffers are disabled (IENx = 0) and channel x is not enabled as external trigger, read returns a “1”. Reset sets all PORTAD1 bits to “1”.

4.3.2.16 ATD Conversion Result Registers (ATDDRx)

The A/D conversion results are stored in 16 read-only result registers. The result data is formatted in the result registers bases on two criteria. First there is left and right justification; this selection is made using the DJM control bit in ATDCTL5. Second there is signed and unsigned data; this selection is made using the DSGN control bit in ATDCTL5. Signed data is stored in 2's complement format and only exists in left justified format. Signed data selected for right justified format is ignored.

Read: Anytime

Write: Anytime in special mode, unimplemented in normal modes

4.3.2.16.1 Left Justified Result Data

	7	6	5	4	3	2	1	0
R (10-BIT) R (8-BIT)	BIT 9 MSB BIT 7 MSB	BIT 8 BIT 6	BIT 7 BIT 5	BIT 6 BIT 4	BIT 5 BIT 3	BIT 4 BIT 2	BIT 3 BIT 1	BIT 2 BIT 0
W								
Reset	0	0	0	0	0	0	0	0

= Unimplemented or Reserved

Figure 4-18. Left Justified, ATD Conversion Result Register x, High Byte (ATDDRxH)

	7	6	5	4	3	2	1	0
R (10-BIT) R (8-BIT)	BIT 1 u	BIT 0 u	0 0	0 0	0 0	0 0	0 0	0 0
W								
Reset	0	0	0	0	0	0	0	0

= Unimplemented or Reserved u = Unaffected

Figure 4-19. Left Justified, ATD Conversion Result Register x, Low Byte (ATDDRxL)

4.3.2.16.2 Right Justified Result Data

	7	6	5	4	3	2	1	0
R (10-BIT) R (8-BIT)	0 0	0 0	0 0	0 0	0 0	0 0	BIT 9 MSB 0	BIT 8 0
W								
Reset	0	0	0	0	0	0	0	0

= Unimplemented or Reserved

Figure 4-20. Right Justified, ATD Conversion Result Register x, High Byte (ATDDRxH)

	7	6	5	4	3	2	1	0
R (10-BIT) R (8-BIT)	BIT 7 BIT 7 MSB	BIT 6 BIT 6	BIT 5 BIT 5	BIT 4 BIT 4	BIT 3 BIT 3	BIT 2 BIT 2	BIT 1 BIT 1	BIT 0 BIT 0
W								
Reset	0	0	0	0	0	0	0	0

= Unimplemented or Reserved

Figure 4-21. Right Justified, ATD Conversion Result Register x, Low Byte (ATDDRxL)

4.4 Functional Description

The ATD10B16C is structured in an analog and a digital sub-block.

4.4.1 Analog Sub-block

The analog sub-block contains all analog electronics required to perform a single conversion. Separate power supplies V_{DDA} and V_{SSA} allow to isolate noise of other MCU circuitry from the analog sub-block.

4.4.1.1 Sample and Hold Machine

The sample and hold (S/H) machine accepts analog signals from the external world and stores them as capacitor charge on a storage node.

The sample process uses a two stage approach. During the first stage, the sample amplifier is used to quickly charge the storage node.The second stage connects the input directly to the storage node to complete the sample for high accuracy.

When not sampling, the sample and hold machine disables its own clocks. The analog electronics continue drawing their quiescent current. The power down (ADPU) bit must be set to disable both the digital clocks and the analog power consumption.

The input analog signals are unipolar and must fall within the potential range of V_{SSA} to VDDA.

4.4.1.2 Analog Input Multiplexer

The analog input multiplexer connects one of the 16 external analog input channels to the sample and hold machine.

4.4.1.3 Sample Buffer Amplifier

The sample amplifier is used to buffer the input analog signal so that the storage node can be quickly charged to the sample potential.

4.4.1.4 Analog-to-Digital (A/D) Machine

The A/D machine performs analog to digital conversions. The resolution is program selectable at either 8 or 10 bits. The A/D machine uses a successive approximation architecture. It functions by comparing the stored analog sample potential with a series of digitally generated analog potentials. By following a binary search algorithm, the A/D machine locates the approximating potential that is nearest to the sampled potential.

When not converting the A/D machine disables its own clocks. The analog electronics continue drawing quiescent current. The power down (ADPU) bit must be set to disable both the digital clocks and the analog power consumption.

Only analog input signals within the potential range of V_{RL} to V_{RH} (A/D reference potentials) will result in a non-railed digital output codes.

4.4.2 Digital Sub-Block

This subsection explains some of the digital features in more detail. See register descriptions for all details.

4.4.2.1 External Trigger Input

The external trigger feature allows the user to synchronize ATD conversions to the external environment events rather than relying on software to signal the ATD module when ATD conversions are to take place. The external trigger signal (out of reset ATD channel 15, configurable in ATDCTL1) is programmable to be edge or level sensitive with polarity control. Table 4-27 gives a brief description of the different combinations of control bits and their effect on the external trigger function.

Table 4-27. External Trigger Control Bits

ETRIGLE	ETRIGP	ETRIGE	SCAN	Description
X	X	0	0	Ignores external trigger. Performs one conversion sequence and stops.
X	X	0	1	Ignores external trigger. Performs continuous conversion sequences.
0	0	1	X	Falling edge triggered. Performs one conversion sequence per trigger.
0	1	1	X	Rising edge triggered. Performs one conversion sequence per trigger.
1	0	1	X	Trigger active low. Performs continuous conversions while trigger is active.
1	1	1	X	Trigger active high. Performs continuous conversions while trigger is active.

During a conversion, if additional active edges are detected the overrun error flag ETORF is set.

In either level or edge triggered modes, the first conversion begins when the trigger is received. In both cases, the maximum latency time is one bus clock cycle plus any skew or delay introduced by the trigger circuitry.

After ETRIGE is enabled, conversions cannot be started by a write to ATDCTL5, but rather must be triggered externally.

If the level mode is active and the external trigger both de-asserts and re-asserts itself during a conversion sequence, this does not constitute an overrun. Therefore, the flag is not set. If the trigger remains asserted in level mode while a sequence is completing, another sequence will be triggered immediately.

4.4.2.2 General-Purpose Digital Input Port Operation

The input channel pins can be multiplexed between analog and digital data. As analog inputs, they are multiplexed and sampled to supply signals to the A/D converter. As digital inputs, they supply external input data that can be accessed through the digital port registers (PORTAD0 & PORTAD1) (input-only).

The analog/digital multiplex operation is performed in the input pads. The input pad is always connected to the analog inputs of the ATD10B16C. The input pad signal is buffered to the digital port registers. This buffer can be turned on or off with the ATDDIEN0 & ATDDIEN1 register. This is important so that the buffer does not draw excess current when analog potentials are presented at its input.

4.4.3 Operation in Low Power Modes

The ATD10B16C can be configured for lower MCU power consumption in three different ways:

- **Stop Mode**
  Stop Mode: This halts A/D conversion. Exit from Stop mode will resume A/D conversion, But due to the recovery time the result of this conversion should be ignored.

  Entering stop mode causes all clocks to halt and thus the system is placed in a minimum power standby mode. This halts any conversion sequence in progress. During recovery from stop mode, there must be a minimum delay for the stop recovery time t_{SR} before initiating a new ATD conversion sequence.
- **Wait Mode**
  Wait Mode with AWAI = 1: This halts A/D conversion. Exit from Wait mode will resume A/D conversion, but due to the recovery time the result of this conversion should be ignored.

  Entering wait mode, the ATD conversion either continues or halts for low power depending on the logical value of the AWAIT bit.
- **Freeze Mode**
  Writing ADPU = 0 (Note that all ATD registers remain accessible.): This aborts any A/D conversion in progress.

  In freeze mode, the ATD10B16C will behave according to the logical values of the FRZ1 and FRZ0 bits. This is useful for debugging and emulation.

NOTE

The reset value for the ADPU bit is zero. Therefore, when this module is reset, it is reset into the power down state.

4.5 Resets

At reset the ATD10B16C is in a power down state. The reset state of each individual bit is listed within Section 4.3, “Memory Map and Register Definition,” which details the registers and their bit fields.

4.6 Interrupts

The interrupt requested by the ATD10B16C is listed in Table 4-28. Refer to MCU specification for related vector address and priority.

Table 4-28. ATD Interrupt Vectors

Interrupt Source	CCR Mask	Local Enable
Sequence Complete Interrupt	I bit	ASCIE in ATDCTL2

See Section 4.3.2, “Register Descriptions,” for further details.

Chapter 5 Analog-to-Digital Converter (S12ATD10B8CV3)

5.1 Introduction

The ATD10B8C is an 8-channel, 10-bit, multiplexed input successive approximation analog-to-digital converter. Refer to device electrical specifications for ATD accuracy.

5.1.1 Features

- 8/10-bit resolution
- 7 µsec, 10-bit single conversion time
- Sample buffer amplifier
- Programmable sample time
- Left/right justified, signed/unsigned result data
- External trigger control
- Conversion completion interrupt generation
- Analog input multiplexer for 8 analog input channels
- Analog/digital input pin multiplexing
- 1-to-8 conversion sequence lengths
- Continuous conversion mode
- Multiple channel scans
- Configurable external trigger functionality on any AD channel or any of four additional external trigger inputs. The four additional trigger inputs can be chip external or internal. Refer to the device overview chapter for availability and connectivity.
- Configurable location for channel wrap around (when converting multiple channels in a sequence).

5.1.2 Modes of Operation

5.1.2.1 Conversion Modes

There is software programmable selection between performing single or continuous conversion on a single channel or multiple channels.

5.1.2.2 MCU Operating Modes

- Stop mode

  Entering stop mode causes all clocks to halt and thus the system is placed in a minimum power standby mode. This aborts any conversion sequence in progress. During recovery from stop mode, there must be a minimum delay for the stop recovery time t_{SR} before initiating a new ATD conversion sequence.
- Wait mode

  Entering wait mode the ATD conversion either continues or aborts for low power depending on the logical value of the AWAIT bit.
- Freeze mode

  In freeze mode the ATD will behave according to the logical values of the FRZ1 and FRZ0 bits. This is useful for debugging and emulation.

5.1.3 Block Diagram

Figure 5-1 shows a block diagram of the ATD.

5.2 External Signal Description

This section lists all inputs to the ATD block.

5.2.1 AN*x* (*x* = 7, 6, 5, 4, 3, 2, 1, 0) — Analog Input Pin

This pin serves as the analog input channel *x*. It can also be configured as general purpose digital port pin and/or external trigger for the ATD conversion.

5.2.2 ETRIG3, ETRIG2, ETRIG1, and ETRIG0 — External Trigger Pins

These inputs can be configured to serve as an external trigger for the ATD conversion.

Refer to the device overview chapter for availability and connectivity of these inputs.

5.2.3 V_{RH} and V_{RL} — High and Low Reference Voltage Pins

V_{RH} is the high reference voltage and V_{RL} is the low reference voltage for ATD conversion.

5.2.4 V_{DDA} and V_{SSA} — Power Supply Pins

These pins are the power supplies for the analog circuitry of the ATD block.

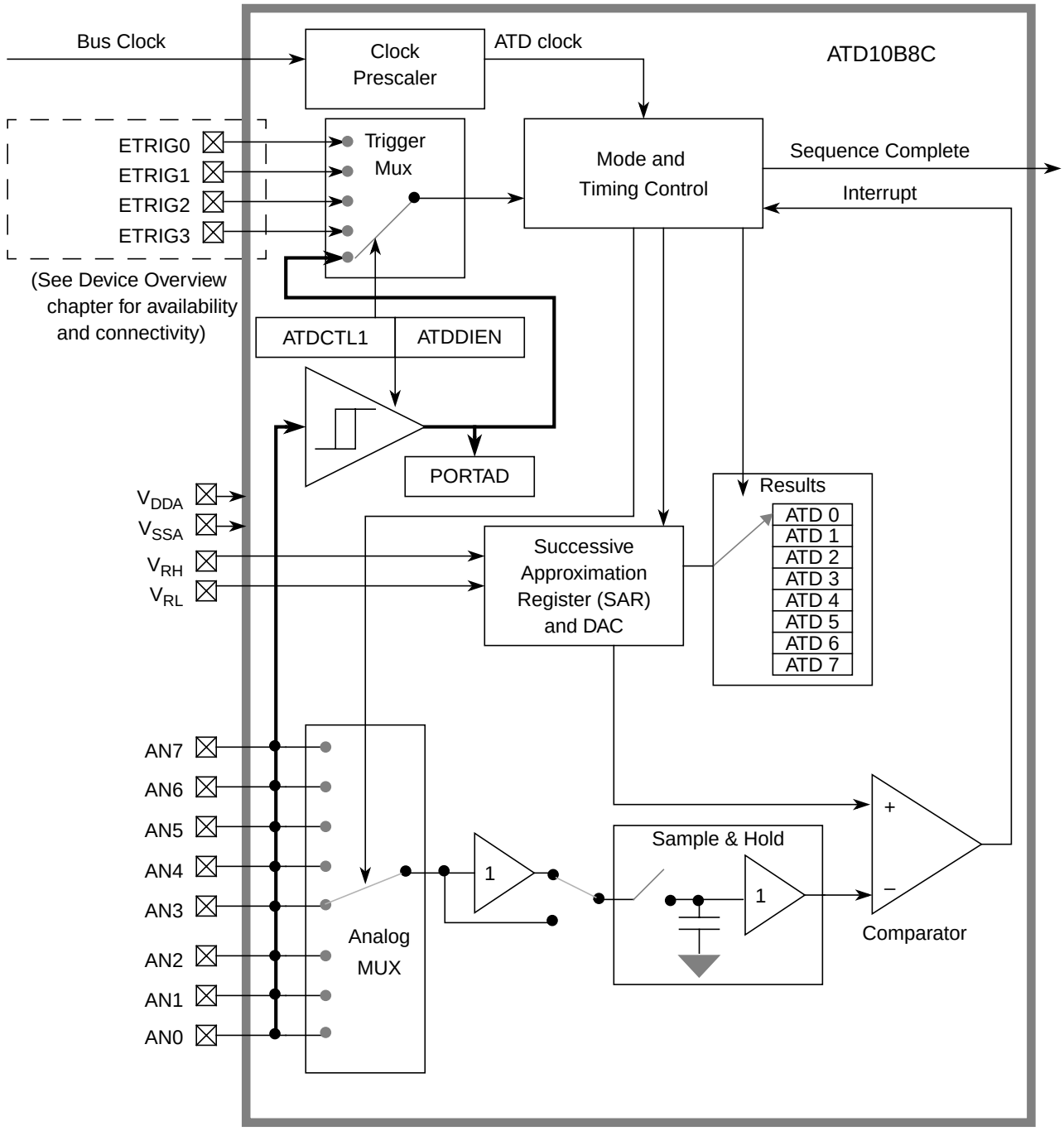

Figure 5-1. ATD Block Diagram

5.3 Memory Map and Register Definition

This section provides a detailed description of all registers accessible in the ATD.

5.3.1 Module Memory Map

Figure 5-2 gives an overview of all ATD registers.

NOTE

Register Address = Base Address + Address Offset, where the Base Address is defined at the MCU level and the Address Offset is defined at the module level.

5.3.2 Register Descriptions

This section describes in address order all the ATD registers and their individual bits.

Register Name		Bit 7	6	5	4	3	2	1	Bit 0
ATDCTL0	R	0	0	0	0	0	WRAP2	WRAP1	WRAP0
	W								
ATDCTL1	R	ETRIGSEL	0	0	0	0	ETRIGCH2	ETRIGCH1	ETRIGCH0
	W								
ATDCTL2	R	ADPU	AFFC	AWAI	ETRIGLE	ETRIGP	ETRIGE	ASCIE	ASCIF
	W								
ATDCTL3	R	0	S8C	S4C	S2C	S1C	FIFO	FRZ1	FRZ0
	W								
ATDCTL4	R	SRES8	SMP1	SMP0	PRS4	PRS3	PRS2	PRS1	PRS0
	W								
ATDCTL5	R	DJM	DSGN	SCAN	MULT	0	CC	CB	CA
	W								
ATDSTAT0	R	SCF	0	ETORF	FIFOR	0	CC2	CC1	CC0
	W								
Unimplemented	R								
	W								
ATDTEST0	R	U	U	U	U	U	U	U	U
	W								
ATDTEST1	R	U	U	0	0	0	0	0	SC
	W								

= Unimplemented or Reserved

Figure 5-2. ATD Register Summary (Sheet 1 of 5)

Register Name		Bit 7	6	5	4	3	2	1	Bit 0
Unimplemented	R								
	W								
ATDSTAT1	R	CCF7	CCF6	CCF5	CCF4	CCF3	CCF2	CCF1	CCF0
	W								
Unimplemented	R								
	W								
ATDDIEN	R	IEN7	IEN6	IEN5	IEN4	IEN3	IEN2	IEN1	IEN0
	W								
Unimplemented	R								
	W								
PORTAD	R	PTAD7	PTAD6	PTAD5	PTAD4	PTAD3	PTAD2	PTAD1	PTAD0
	W								

Left Justified Result Data

Note: The read portion of the left justified result data registers has been divided to show the bit position when reading 10-bit and 8-bit conversion data. For more detailed information refer to Section 5.3.2.13, “ATD Conversion Result Registers (ATDDRx)”.

ATDDR0H	10-BIT	BIT 9 MSB	BIT 8	BIT 7	BIT 6	BIT 5	BIT 4	BIT 3	BIT 2
	8-BIT	BIT 7 MSB	BIT 6	BIT 5	BIT 4	BIT 3	BIT 2	BIT 1	BIT 0
	W								
ATDDR0L	10-BIT	BIT 1	BIT 0	0	0	0	0	0	0
	8-BIT	U	U	0	0	0	0	0	0
	W								
ATDDR1H	10-BIT	BIT 9 MSB	BIT 8	BIT 7	BIT 6	BIT 5	BIT 4	BIT 3	BIT 2
	8-BIT	BIT 7 MSB	BIT 6	BIT 5	BIT 4	BIT 3	BIT 2	BIT 1	BIT 0
	W								
ATDDR1L	10-BIT	BIT 1	BIT 0	0	0	0	0	0	0
	8-BIT	U	U	0	0	0	0	0	0
	W								
ATDDR2H	10-BIT	BIT 9 MSB	BIT 8	BIT 7	BIT 6	BIT 5	BIT 4	BIT 3	BIT 2
	8-BIT	BIT 7 MSB	BIT 6	BIT 5	BIT 4	BIT 3	BIT 2	BIT 1	BIT 0
	W								
ATDDR2L	10-BIT	BIT 1	BIT 0	0	0	0	0	0	0
	8-BIT	U	U	0	0	0	0	0	0
	W								
ATDDR3H	10-BIT	BIT 9 MSB	BIT 8	BIT 7	BIT 6	BIT 5	BIT 4	BIT 3	BIT 2
	8-BIT	BIT 7 MSB	BIT 6	BIT 5	BIT 4	BIT 3	BIT 2	BIT 1	BIT 0
	W								

= Unimplemented or Reserved

Figure 5-2. ATD Register Summary (Sheet 2 of 5)

Register Name		Bit 7	6	5	4	3	2	1	Bit 0
ATDDR3L	10-BIT	BIT 1	BIT 0	0	0	0	0	0	0
	8-BIT	U	U	0	0	0	0	0	0
	W								
ATDDR4H	10-BIT	BIT 9 MSB	BIT 8	BIT 7	BIT 6	BIT 5	BIT 4	BIT 3	BIT 2
	8-BIT	BIT 7 MSB	BIT 6	BIT 5	BIT 4	BIT 3	BIT 2	BIT 1	BIT 0
	W								
ATDDR4L	10-BIT	BIT 1	BIT 0	0	0	0	0	0	0
	8-BIT	U	U	0	0	0	0	0	0
	W								
ATDD45H	10-BIT	BIT 9 MSB	BIT 8	BIT 7	BIT 6	BIT 5	BIT 4	BIT 3	BIT 2
	8-BIT	BIT 7 MSB	BIT 6	BIT 5	BIT 4	BIT 3	BIT 2	BIT 1	BIT 0
	W								
ATDD45L	10-BIT	BIT 1	BIT 0	0	0	0	0	0	0
	8-BIT	U	U	0	0	0	0	0	0
	W								
ATDD46H	10-BIT	BIT 9 MSB	BIT 8	BIT 7	BIT 6	BIT 5	BIT 4	BIT 3	BIT 2
	8-BIT	BIT 7 MSB	BIT 6	BIT 5	BIT 4	BIT 3	BIT 2	BIT 1	BIT 0
	W								
ATDDR6L	10-BIT	BIT 1	BIT 0	0	0	0	0	0	0
	8-BIT	U	U	0	0	0	0	0	0
	W								
ATDD47H	10-BIT	BIT 9 MSB	BIT 8	BIT 7	BIT 6	BIT 5	BIT 4	BIT 3	BIT 2
	8-BIT	BIT 7 MSB	BIT 6	BIT 5	BIT 4	BIT 3	BIT 2	BIT 1	BIT 0
	W								
ATDD47L	10-BIT	BIT 1	BIT 0	0	0	0	0	0	0
	8-BIT	U	U	0	0	0	0	0	0
	W								

Right Justified Result Data

Note: The read portion of the right justified result data registers has been divided to show the bit position when reading 10-bit and 8-bit conversion data. For more detailed information refer to Section 5.3.2.13, “ATD Conversion Result Registers (ATDDRx)”.

ATDDR0H	10-BIT	0	0	0	0	0	0	BIT 9 MSB	BIT 8
	8-BIT	0	0	0	0	0	0	0	0
	W								
ATDDR0L	10-BIT	BIT 7	BIT 6	BIT 5	BIT 4	BIT 3	BIT 2	BIT 1	BIT 0
	8-BIT	BIT 7 MSB	BIT 6	BIT 5	BIT 4	BIT 3	BIT 2	BIT 1	BIT 0
	W								

= Unimplemented or Reserved

Figure 5-2. ATD Register Summary (Sheet 3 of 5)

Register Name		Bit 7	6	5	4	3	2	1	Bit 0
ATDDR1H	10-BIT	0	0	0	0	0	0	BIT 9 MSB	BIT 8
	8-BIT	0	0	0	0	0	0	0	0
	W								
ATDDR1L	10-BIT	BIT 7	BIT 6	BIT 5	BIT 4	BIT 3	BIT 2	BIT 1	BIT 0
	8-BIT	BIT 7 MSB	BIT 6	BIT 5	BIT 4	BIT 3	BIT 2	BIT 1	BIT 0
	W								
ATDDR2H	10-BIT	0	0	0	0	0	0	BIT 9 MSB	BIT 8
	8-BIT	0	0	0	0	0	0	0	0
	W								
ATDDR2L	10-BIT	BIT 7	BIT 6	BIT 5	BIT 4	BIT 3	BIT 2	BIT 1	BIT 0
	8-BIT	BIT 7 MSB	BIT 6	BIT 5	BIT 4	BIT 3	BIT 2	BIT 1	BIT 0
	W								
ATDDR3H	10-BIT	0	0	0	0	0	0	BIT 9 MSB	BIT 8
	8-BIT	0	0	0	0	0	0	0	0
	W								
ATDDR3L	10-BIT	BIT 7	BIT 6	BIT 5	BIT 4	BIT 3	BIT 2	BIT 1	BIT 0
	8-BIT	BIT 7 MSB	BIT 6	BIT 5	BIT 4	BIT 3	BIT 2	BIT 1	BIT 0
	W								
ATDDR4H	10-BIT	0	0	0	0	0	0	BIT 9 MSB	BIT 8
	8-BIT	0	0	0	0	0	0	0	0
	W								
ATDDR4L	10-BIT	BIT 7	BIT 6	BIT 5	BIT 4	BIT 3	BIT 2	BIT 1	BIT 0
	8-BIT	BIT 7 MSB	BIT 6	BIT 5	BIT 4	BIT 3	BIT 2	BIT 1	BIT 0
	W								
ATDD45H	10-BIT	0	0	0	0	0	0	BIT 9 MSB	BIT 8
	8-BIT	0	0	0	0	0	0	0	0
	W								
ATDD45L	10-BIT	BIT 7	BIT 6	BIT 5	BIT 4	BIT 3	BIT 2	BIT 1	BIT 0
	8-BIT	BIT 7 MSB	BIT 6	BIT 5	BIT 4	BIT 3	BIT 2	BIT 1	BIT 0
	W								
ATDD46H	10-BIT	0	0	0	0	0	0	BIT 9 MSB	BIT 8
	8-BIT	0	0	0	0	0	0	0	0
	W								
ATDDR6L	10-BIT	BIT 7	BIT 6	BIT 5	BIT 4	BIT 3	BIT 2	BIT 1	BIT 0
	8-BIT	BIT 7 MSB	BIT 6	BIT 5	BIT 4	BIT 3	BIT 2	BIT 1	BIT 0
	W								

= Unimplemented or Reserved

Figure 5-2. ATD Register Summary (Sheet 4 of 5)

Register Name		Bit 7	6	5	4	3	2	1	Bit 0
ATDD47H	10-BIT	0	0	0	0	0	0	BIT 9 MSB	BIT 8
	8-BIT	0	0	0	0	0	0	0	0
	W								
ATDD47L	10-BIT	BIT 7 BIT 7 MSB	BIT 6 BIT 6	BIT 5 BIT 5	BIT 4 BIT 4	BIT 3 BIT 3	BIT 2 BIT 2	BIT 1 BIT 1	BIT 0 BIT 0
	8-BIT								

= Unimplemented or Reserved

Figure 5-2. ATD Register Summary (Sheet 5 of 5)

5.3.2.1 ATD Control Register 0 (ATDCTL0)

Writes to this register will abort current conversion sequence but will not start a new sequence.

	7	6	5	4	3	2	1	0
R	0	0	0	0	0	WRAP2	WRAP1	WRAP0
W								
Reset	0	0	0	0	0	1	1	1

= Unimplemented or Reserved

Figure 5-3. ATD Control Register 0 (ATDCTL0)

Read: Anytime

Write: Anytime

Table 5-1. ATDCTL0 Field Descriptions

Field	Description
2–0 WRAP[2:0]	**Wrap Around Channel Select Bits** — These bits determine the channel for wrap around when doing multi-channel conversions. The coding is summarized in Table 5-2.

Table 5-2. Multi-Channel Wrap Around Coding

WRAP2	WRAP1	WRAP0	Multiple Channel Conversions (MULT = 1) Wrap Around to AN0 after Converting
0	0	0	Reserved
0	0	1	AN1
0	1	0	AN2
0	1	1	AN3
1	0	0	AN4
1	0	1	AN5
1	1	0	AN6
1	1	1	AN7

5.3.2.2 ATD Control Register 1 (ATDCTL1)

Writes to this register will abort current conversion sequence but will not start a new sequence.

	7	6	5	4	3	2	1	0
R	ETRIGSEL	0	0	0	0	ETRIGCH2	ETRIGCH1	ETRIGCH0
W								
Reset	0	0	0	0	0	1	1	1

= Unimplemented or Reserved

Figure 5-4. ATD Control Register 1 (ATDCTL1)

Read: Anytime

Write: Anytime

Table 5-3. ATDCTL1 Field Descriptions

Field	Description
7 ETRIGSEL	**External Trigger Source Select** — This bit selects the external trigger source to be either one of the AD channels or one of the ETRIG3–0 inputs. See the device overview chapter for availability and connectivity of ETRIG3–0 inputs. If ETRIG3–0 input option is not available, writing a 1 to ETRISEL only sets the bit but has not effect, that means still one of the AD channels (selected by ETRIGCH2–0) is the source for external trigger. The coding is summarized in Table 5-4.
2–0 ETRIGCH[2:0]	**External Trigger Channel Select** — These bits select one of the AD channels or one of the ETRIG3–0 inputs as source for the external trigger. The coding is summarized in Table 5-4.

Table 5-4. External Trigger Channel Select Coding

ETRIGSEL	ETRIGCH2	ETRIGCH1	ETRIGCH0	External trigger source is
0	0	0	0	AN0
0	0	0	1	AN1
0	0	1	0	AN2
0	0	1	1	AN3
0	1	0	0	AN4
0	1	0	1	AN5
0	1	1	0	AN6
0	1	1	1	AN7
1	0	0	0	ETRIG0[1]
1	0	0	1	ETRIG1[1]
1	0	1	0	ETRIG2[1]
1	0	1	1	ETRIG3[1]
1	1	X	X	Reserved

[1] Only if ETRIG3–0 input option is available (see device overview chapter), else ETRISEL is ignored, that means external trigger source is still on one of the AD channels selected by ETRIGCH2–0

5.3.2.3 ATD Control Register 2 (ATDCTL2)

This register controls power down, interrupt and external trigger. Writes to this register will abort current conversion sequence but will not start a new sequence.

	7	6	5	4	3	2	1	0
R W	ADPU	AFFC	AWAI	ETRIGLE	ETRIGP	ETRIGE	ASCIE	ASCIF
Reset	0	0	0	0	0	0	0	0

= Unimplemented or Reserved

Figure 5-5. ATD Control Register 2 (ATDCTL2)

Read: Anytime

Write: Anytime

Table 5-5. ATDCTL2 Field Descriptions

Field	Description
7 ADPU	**ATD Power Up** — This bit provides on/off control over the ATD block allowing reduced MCU power consumption. Because analog electronic is turned off when powered down, the ATD requires a recovery time period after ADPU bit is enabled. 0 Power down ATD 1 Normal ATD functionality
6 AFFC	**ATD Fast Flag Clear All** 0 ATD flag clearing operates normally (read the status register ATDSTAT1 before reading the result register to clear the associate CCF flag). 1 Changes all ATD conversion complete flags to a fast clear sequence. Any access to a result register will cause the associate CCF flag to clear automatically.
5 AWAI	**ATD Power Down in Wait Mode** — When entering wait mode this bit provides on/off control over the ATD block allowing reduced MCU power. Because analog electronic is turned off when powered down, the ATD requires a recovery time period after exit from Wait mode. 0 ATD continues to run in Wait mode 1 Halt conversion and power down ATD during wait mode After exiting wait mode with an interrupt conversion will resume. But due to the recovery time the result of this conversion should be ignored.
4 ETRIGLE	**External Trigger Level/Edge Control** — This bit controls the sensitivity of the external trigger signal. See Table 5-6 for details.
3 ETRIGP	**External Trigger Polarity** — This bit controls the polarity of the external trigger signal. See Table 5-6 for details.
2 ETRIGE	**External Trigger Mode Enable** — This bit enables the external trigger on one of the AD channels or one of the ETRIG3–0 inputs as described in Table 5-4. If external trigger source is one of the AD channels, the digital input buffer of this channel is enabled. The external trigger allows to synchronize sample and ATD conversions processes with external events. 0 Disable external trigger 1 Enable external trigger **Note:** If using one of the AD channel as external trigger (ETRIGSEL = 0) the conversion results for this channel have no meaning while external trigger mode is enabled.

Table 5-5. ATDCTL2 Field Descriptions (continued)

Field	Description
1 ASCIE	**ATD Sequence Complete Interrupt Enable** 0 ATD Sequence Complete interrupt requests are disabled. 1 ATD Interrupt will be requested whenever ASCIF = 1 is set.
0 ASCIF	**ATD Sequence Complete Interrupt Flag** — If ASCIE = 1 the ASCIF flag equals the SCF flag (see Section 5.3.2.7, "ATD Status Register 0 (ATDSTAT0)"), else ASCIF reads zero. Writes have no effect. 0 No ATD interrupt occurred 1 ATD sequence complete interrupt pending

Table 5-6. External Trigger Configurations

ETRIGLE	ETRIGP	External Trigger Sensitivity
0	0	Falling edge
0	1	Rising edge
1	0	Low level
1	1	High level

5.3.2.4 ATD Control Register 3 (ATDCTL3)

This register controls the conversion sequence length, FIFO for results registers and behavior in freeze mode. Writes to this register will abort current conversion sequence but will not start a new sequence.

	7	6	5	4	3	2	1	0
R	0	S8C	S4C	S2C	S1C	FIFO	FRZ1	FRZ0
W								
Reset	0	0	0	0	0	0	0	0

= Unimplemented or Reserved

Figure 5-6. ATD Control Register 3 (ATDCTL3)

Read: Anytime

Write: Anytime

Table 5-7. ATDCTL3 Field Descriptions

Field	Description
6–3 S8C, S4C, S2C, S1C	**Conversion Sequence Length** — These bits control the number of conversions per sequence. Table 5-8 shows all combinations. At reset, S4C is set to 1 (sequence length is 4). This is to maintain software continuity to HC12 Family.

Table 5-7. ATDCTL3 Field Descriptions (continued)

Field	Description
2 FIFO	**Result Register FIFO Mode** — If this bit is zero (non-FIFO mode), the A/D conversion results map into the result registers based on the conversion sequence; the result of the first conversion appears in the first result register, the second result in the second result register, and so on. If this bit is one (FIFO mode) the conversion counter is not reset at the beginning or ending of a conversion sequence; sequential conversion results are placed in consecutive result registers. In a continuously scanning conversion sequence, the result register counter will wrap around when it reaches the end of the result register file. The conversion counter value (CC2-0 in ATDSTAT0) can be used to determine where in the result register file, the current conversion result will be placed. Aborting a conversion or starting a new conversion by write to an ATDCTL register (ATDCTL5-0) clears the conversion counter even if FIFO=1. So the first result of a new conversion sequence, started by writing to ATDCTL5, will always be place in the first result register (ATDDDR0). Intended usage of FIFO mode is continuos conversion (SCAN=1) or triggered conversion (ETRIG=1). Finally, which result registers hold valid data can be tracked using the conversion complete flags. Fast flag clear mode may or may not be useful in a particular application to track valid data. 0 Conversion results are placed in the corresponding result register up to the selected sequence length. 1 Conversion results are placed in consecutive result registers (wrap around at end).
1–0 FRZ[1:0]	**Background Debug Freeze Enable** — When debugging an application, it is useful in many cases to have the ATD pause when a breakpoint (Freeze Mode) is encountered. These 2 bits determine how the ATD will respond to a breakpoint as shown in Table 5-9. Leakage onto the storage node and comparator reference capacitors may compromise the accuracy of an immediately frozen conversion depending on the length of the freeze period.

Table 5-8. Conversion Sequence Length Coding

S8C	S4C	S2C	S1C	Number of Conversions per Sequence
0	0	0	0	8
0	0	0	1	1
0	0	1	0	2
0	0	1	1	3
0	1	0	0	4
0	1	0	1	5
0	1	1	0	6
0	1	1	1	7
1	X	X	X	8

Table 5-9. ATD Behavior in Freeze Mode (Breakpoint)

FRZ1	FRZ0	Behavior in Freeze Mode
0	0	Continue conversion
0	1	Reserved
1	0	Finish current conversion, then freeze
1	1	Freeze Immediately

5.3.2.5 ATD Control Register 4 (ATDCTL4)

This register selects the conversion clock frequency, the length of the second phase of the sample time and the resolution of the A/D conversion (i.e.: 8-bits or 10-bits). Writes to this register will abort current conversion sequence but will not start a new sequence.

	7	6	5	4	3	2	1	0
R W	SRES8	SMP1	SMP0	PRS4	PRS3	PRS2	PRS1	PRS0
Reset	0	0	0	0	0	1	0	1

Figure 5-7. ATD Control Register 4 (ATDCTL4)

Read: Anytime

Write: Anytime

Table 5-10. ATDCTL4 Field Descriptions

Field	Description
7 SRES8	**A/D Resolution Select** — This bit selects the resolution of A/D conversion results as either 8 or 10 bits. The A/D converter has an accuracy of 10 bits; however, if low resolution is required, the conversion can be speeded up by selecting 8-bit resolution. 0 10-bit resolution 8-bit resolution
6–5 SMP[1:0]	**Sample Time Select** — These two bits select the length of the second phase of the sample time in units of ATD conversion clock cycles. Note that the ATD conversion clock period is itself a function of the prescaler value (bits PRS4–0). The sample time consists of two phases. The first phase is two ATD conversion clock cycles long and transfers the sample quickly (via the buffer amplifier) onto the A/D machine's storage node. The second phase attaches the external analog signal directly to the storage node for final charging and high accuracy. Table 5-11 lists the lengths available for the second sample phase.
4–0 PRS[4:0]	**ATD Clock Prescaler —** These 5 bits are the binary value prescaler value PRS. The ATD conversion clock frequency is calculated as follows: $ATDclock = \frac{[BusClock]}{[PRS+1]} \times 0.5$ **Note:** The maximum ATD conversion clock frequency is half the bus clock. The default (after reset) prescaler value is 5 which results in a default ATD conversion clock frequency that is bus clock divided by 12. Table 5-12 illustrates the divide-by operation and the appropriate range of the bus clock.

Table 5-11. Sample Time Select

SMP1	SMP0	Length of 2nd Phase of Sample Time
0	0	2 A/D conversion clock periods
0	1	4 A/D conversion clock periods
1	0	8 A/D conversion clock periods
1	1	16 A/D conversion clock periods

Table 5-12. Clock Prescaler Values

Prescale Value	Total Divisor Value	Max. Bus Clock[1]	Min. Bus Clock[2]
00000	Divide by 2	4 MHz	1 MHz
00001	Divide by 4	8 MHz	2 MHz
00010	Divide by 6	12 MHz	3 MHz
00011	Divide by 8	16 MHz	4 MHz
00100	Divide by 10	20 MHz	5 MHz
00101	Divide by 12	24 MHz	6 MHz
00110	Divide by 14	28 MHz	7 MHz
00111	Divide by 16	32 MHz	8 MHz
01000	Divide by 18	36 MHz	9 MHz
01001	Divide by 20	40 MHz	10 MHz
01010	Divide by 22	44 MHz	11 MHz
01011	Divide by 24	48 MHz	12 MHz
01100	Divide by 26	52 MHz	13 MHz
01101	Divide by 28	56 MHz	14 MHz
01110	Divide by 30	60 MHz	15 MHz
01111	Divide by 32	64 MHz	16 MHz
10000	Divide by 34	68 MHz	17 MHz
10001	Divide by 36	72 MHz	18 MHz
10010	Divide by 38	76 MHz	19 MHz
10011	Divide by 40	80 MHz	20 MHz
10100	Divide by 42	84 MHz	21 MHz
10101	Divide by 44	88 MHz	22 MHz
10110	Divide by 46	92 MHz	23 MHz
10111	Divide by 48	96 MHz	24 MHz
11000	Divide by 50	100 MHz	25 MHz
11001	Divide by 52	104 MHz	26 MHz
11010	Divide by 54	108 MHz	27 MHz
11011	Divide by 56	112 MHz	28 MHz
11100	Divide by 58	116 MHz	29 MHz
11101	Divide by 60	120 MHz	30 MHz
11110	Divide by 62	124 MHz	31 MHz
11111	Divide by 64	128 MHz	32 MHz

[1] Maximum ATD conversion clock frequency is 2 MHz. The maximum allowed bus clock frequency is shown in this column.

[2] Minimum ATD conversion clock frequency is 500 kHz. The minimum allowed bus clock frequency is shown in this column.

5.3.2.6 ATD Control Register 5 (ATDCTL5)

This register selects the type of conversion sequence and the analog input channels sampled. Writes to this register will abort current conversion sequence and start a new conversion sequence.

	7	6	5	4	3	2	1	0
R	DJM	DSGN	SCAN	MULT	0	CC	CB	CA
W								
Reset	0	0	0	0	0	0	0	0

= Unimplemented or Reserved

Figure 5-8. ATD Control Register 5 (ATDCTL5)

Read: Anytime

Write: Anytime

Table 5-13. ATDCTL5 Field Descriptions

Field	Description
7 DJM	**Result Register Data Justification** — This bit controls justification of conversion data in the result registers. See Section 5.3.2.13, “ATD Conversion Result Registers (ATDDRx),” for details. 0 Left justified data in the result registers 1 Right justified data in the result registers
6 DSGN	**Result Register Data Signed or Unsigned Representation** — This bit selects between signed and unsigned conversion data representation in the result registers. Signed data is represented as 2’s complement. Signed data is not available in right justification. See Section 5.3.2.13, “ATD Conversion Result Registers (ATDDRx),” for details. 0 Unsigned data representation in the result registers 1 Signed data representation in the result registers Table 5-14 summarizes the result data formats available and how they are set up using the control bits. Table 5-15 illustrates the difference between the signed and unsigned, left justified output codes for an input signal range between 0 and 5.12 Volts.
5 SCAN	**Continuous Conversion Sequence Mode** — This bit selects whether conversion sequences are performed continuously or only once. 0 Single conversion sequence 1 Continuous conversion sequences (scan mode)
4 MULT	**Multi-Channel Sample Mode** — When MULT is 0, the ATD sequence controller samples only from the specified analog input channel for an entire conversion sequence. The analog channel is selected by channel selection code (control bits CC/CB/CA located in ATDCTL5). When MULT is 1, the ATD sequence controller samples across channels. The number of channels sampled is determined by the sequence length value (S8C, S4C, S2C, S1C). The first analog channel examined is determined by channel selection code (CC, CB, CA control bits); subsequent channels sampled in the sequence are determined by incrementing the channel selection code. 0 Sample only one channel 1 Sample across several channels
2–0 CC, CB, CA	**Analog Input Channel Select Code** — These bits select the analog input channel(s) whose signals are sampled and converted to digital codes. Table 5-16 lists the coding used to select the various analog input channels. In the case of single channel scans (MULT = 0), this selection code specified the channel examined. In the case of multi-channel scans (MULT = 1), this selection code represents the first channel to be examined in the conversion sequence. Subsequent channels are determined by incrementing channel selection code; selection codes that reach the maximum value wrap around to the minimum value.

Table 5-14. Available Result Data Formats

SRES8	DJM	DSGN	Result Data Formats Description and Bus Bit Mapping
1	0	0	8-bit / left justified / unsigned — bits 8–15
1	0	1	8-bit / left justified / signed — bits 8–15
1	1	X	8-bit / right justified / unsigned — bits 0–7
0	0	0	10-bit / left justified / unsigned — bits 6–15
0	0	1	10-bit / left justified / signed — bits 6–15
0	1	X	10-bit / right justified / unsigned — bits 0–9

Table 5-15. Left Justified, Signed, and Unsigned ATD Output Codes

Input Signal V_{RL} = 0 Volts V_{RH} = 5.12 Volts	Signed 8-Bit Codes	Unsigned 8-Bit Codes	Signed 10-Bit Codes	Unsigned 10-Bit Codes
5.120 Volts	7F	FF	7FC0	FFC0
5.100	7F	FF	7F00	FF00
5.080	7E	FE	7E00	FE00
2.580	01	81	0100	8100
2.560	00	80	0000	8000
2.540	FF	7F	FF00	7F00
0.020	81	01	8100	0100
0.000	80	00	8000	0000

Table 5-16. Analog Input Channel Select Coding

CC	CB	CA	Analog Input Channel
0	0	0	AN0
0	0	1	AN1
0	1	0	AN2
0	1	1	AN3
1	0	0	AN4
1	0	1	AN5
1	1	0	AN6
1	1	1	AN7

5.3.2.7 ATD Status Register 0 (ATDSTAT0)

This read-only register contains the sequence complete flag, overrun flags for external trigger and FIFO mode, and the conversion counter.

	7	6	5	4	3	2	1	0
R	SCF	0	ETORF	FIFOR	0	CC2	CC1	CC0
W								
Reset	0	0	0	0	0	0	0	0

= Unimplemented or Reserved

Figure 5-9. ATD Status Register 0 (ATDSTAT0)

Read: Anytime

Write: Anytime (No effect on (CC2, CC1, CC0))

Table 5-17. ATDSTAT0 Field Descriptions

Field	Description
7 SCF	**Sequence Complete Flag** — This flag is set upon completion of a conversion sequence. If conversion sequences are continuously performed (SCAN = 1), the flag is set after each one is completed. This flag is cleared when one of the following occurs: A) Write “1” to SCF B) Write to ATDCTL5 (a new conversion sequence is started) C) If AFFC=1 and read of a result register 0 Conversion sequence not completed 1 Conversion sequence has completed
5 ETORF	**External Trigger Overrun Flag** — While in edge trigger mode (ETRIGLE = 0), if additional active edges are detected while a conversion sequence is in process the overrun flag is set. This flag is cleared when one of the following occurs: A) Write “1” to ETORF B) Write to ATDCTL2, ATDCTL3 or ATDCTL4 (a conversion sequence is aborted) C) Write to ATDCTL5 (a new conversion sequence is started) 0 No External trigger over run error has occurred 1 External trigger over run error has occurred
4 FIFOR	**FIFO Over Run Flag** — This bit indicates that a result register has been written to before its associated conversion complete flag (CCF) has been cleared. This flag is most useful when using the FIFO mode because the flag potentially indicates that result registers are out of sync with the input channels. However, it is also practical for non-FIFO modes, and indicates that a result register has been over written before it has been read (i.e., the old data has been lost). This flag is cleared when one of the following occurs: A) Write “1” to FIFOR B) Start a new conversion sequence (write to ATDCTL5 or external trigger) 0 No over run has occurred 1 An over run condition exists
2–0 CC[2:0]	**Conversion Counter** — These 3 read-only bits are the binary value of the conversion counter. The conversion counter points to the result register that will receive the result of the current conversion. E.g. CC2 = 1, CC1 = 1, CC0 = 0 indicates that the result of the current conversion will be in ATD result register 6. If in non-FIFO mode (FIFO = 0) the conversion counter is initialized to zero at the begin and end of the conversion sequence. If in FIFO mode (FIFO = 1) the register counter is not initialized. The conversion counters wraps around when its maximum value is reached. Aborting a conversion or starting a new conversion by write to an ATDCTL register (ATDCTL5-0) clears the conversion counter even if FIFO=1.

5.3.2.8 Reserved Register (ATDTEST0)

	7	6	5	4	3	2	1	0
R	U	U	U	U	U	U	U	U
W								
Reset	1	0	0	0	0	0	0	0

= Unimplemented or Reserved

Figure 5-10. Reserved Register (ATDTEST0)

Read: Anytime, returns unpredictable values

Write: Anytime in special modes, unimplemented in normal modes

NOTE

Writing to this register when in special modes can alter functionality.

5.3.2.9 ATD Test Register 1 (ATDTEST1)

This register contains the SC bit used to enable special channel conversions.

	7	6	5	4	3	2	1	0
R	U	U	0	0	0	0	0	SC
W								
Reset	0	0	0	0	0	0	0	0

= Unimplemented or Reserved

Figure 5-11. ATD Test Register 1 (ATDTEST1)

Read: Anytime, returns unpredictable values for Bit7 and Bit6

Write: Anytime

Table 5-18. ATDTEST1 Field Descriptions

Field	Description
0 SC	**Special Channel Conversion Bit** — If this bit is set, then special channel conversion can be selected using CC, CB and CA of ATDCTL5. Table 5-19 lists the coding. 0 Special channel conversions disabled 1 Special channel conversions enabled **Note:** Always write remaining bits of ATDTEST1 (Bit7 to Bit1) zero when writing SC bit. Not doing so might result in unpredictable ATD behavior.

Table 5-19. Special Channel Select Coding

SC	CC	CB	CA	Analog Input Channel
1	0	X	X	Reserved
1	1	0	0	V_{RH}
1	1	0	1	V_{RL}
1	1	1	0	$(V_{RH}+V_{RL}) / 2$
1	1	1	1	Reserved

5.3.2.10 ATD Status Register 1 (ATDSTAT1)

This read-only register contains the conversion complete flags.

	7	6	5	4	3	2	1	0
R	CCF7	CCF6	CCF5	CCF4	CCF3	CCF2	CCF1	CCF0
W								
Reset	0	0	0	0	0	0	0	0

= Unimplemented or Reserved

Figure 5-12. ATD Status Register 1 (ATDSTAT1)

Read: Anytime

Write: Anytime, no effect

Table 5-20. ATDSTAT1 Field Descriptions

Field	Description
7–0 CCF[7:0]	**Conversion Complete Flag x (x = 7, 6, 5, 4, 3, 2, 1, 0)** — A conversion complete flag is set at the end of each conversion in a conversion sequence. The flags are associated with the conversion position in a sequence (and also the result register number). Therefore, CCF0 is set when the first conversion in a sequence is complete and the result is available in result register ATDDR0; CCF1 is set when the second conversion in a sequence is complete and the result is available in ATDDR1, and so forth. A flag CCFx (x = 7, 6, 5, 4, 3, 2,1, 70) is cleared when one of the following occurs: A) Write to ATDCTL5 (a new conversion sequence is started) B) If AFFC=0 and read of ATDSTAT1 followed by read of result register ATDDRx C) If AFFC=1 and read of result register ATDDRx In case of a concurrent set and clear on CCFx: The clearing by method A) will overwrite the set. The clearing by methods B) or C) will be overwritten by the set. 0 Conversion number x not completed 1 Conversion number x has completed, result ready in ATDDRx

5.3.2.11 ATD Input Enable Register (ATDDIEN)

	7	6	5	4	3	2	1	0
R W	IEN7	IEN6	IEN5	IEN4	IEN3	IEN2	IEN1	IEN0
Reset	0	0	0	0	0	0	0	0

Figure 5-13. ATD Input Enable Register (ATDDIEN)

Read: Anytime

Write: Anytime

Table 5-21. ATDDIEN Field Descriptions

Field	Description
7–0 IEN[7:0]	**ATD Digital Input Enable on channel x (x = 7, 6, 5, 4, 3, 2, 1, 0)** — This bit controls the digital input buffer from the analog input pin (ANx) to PTADx data register. 0 Disable digital input buffer to PTADx 1 Enable digital input buffer to PTADx. **Note:** Setting this bit will enable the corresponding digital input buffer continuously. If this bit is set while simultaneously using it as an analog port, there is potentially increased power consumption because the digital input buffer maybe in the linear region.

5.3.2.12 Port Data Register (PORTAD)

The data port associated with the ATD can be configured as general-purpose I/O or input only, as specified in the device overview. The port pins are shared with the analog A/D inputs AN7–0.

	7	6	5	4	3	2	1	0
R	PTAD7	PTAD6	PTAD5	PTAD4	PTAD3	PTAD2	PTAD1	PTAD0
W								
Reset	1	1	1	1	1	1	1	1
Pin Function	AN7	AN6	AN5	AN4	AN3	AN2	AN1	AN0

= Unimplemented or Reserved

Figure 5-14. Port Data Register (PORTAD)

Read: Anytime

Write: Anytime, no effect

The A/D input channels may be used for general purpose digital input.

Table 5-22. PORTAD Field Descriptions

Field	Description
7–0 PTAD[7:0]	**A/D Channel x (ANx) Digital Input (x = 7, 6, 5, 4, 3, 2, 1, 0)** — If the digital input buffer on the ANx pin is enabled (IENx = 1) or channel x is enabled as external trigger (ETRIGE = 1,ETRIGCH[2–0] = x,ETRIGSEL = 0) read returns the logic level on ANx pin (signal potentials not meeting V_{IL} or V_{IH} specifications will have an indeterminate value). If the digital input buffers are disabled (IENx = 0) and channel x is not enabled as external trigger, read returns a “1”. Reset sets all PORTAD0 bits to “1”.

5.3.2.13 ATD Conversion Result Registers (ATDDRx)

The A/D conversion results are stored in 8 read-only result registers. The result data is formatted in the result registers based on two criteria. First there is left and right justification; this selection is made using the DJM control bit in ATDCTL5. Second there is signed and unsigned data; this selection is made using the DSGN control bit in ATDCTL5. Signed data is stored in 2's complement format and only exists in left justified format. Signed data selected for right justified format is ignored.

Read: Anytime

Write: Anytime in special mode, unimplemented in normal modes

5.3.2.13.1 Left Justified Result Data

	7	6	5	4	3	2	1	0	
R	BIT 9 MSB	BIT 8	BIT 7	BIT 6	BIT 5	BIT 4	BIT 3	BIT 2	10-bit data
R	BIT 7 MSB	BIT 6	BIT 5	BIT 4	BIT 3	BIT 2	BIT 1	BIT 0	8-bit data
W									
Reset	0	0	0	0	0	0	0	0	

= Unimplemented or Reserved

Figure 5-15. Left Justified, ATD Conversion Result Register, High Byte (ATDDRxH)

	7	6	5	4	3	2	1	0
R	BIT 1	BIT 0	0	0	0	0	0	0
R	U	U	0	0	0	0	0	0
W								
Reset	0	0	0	0	0	0	0	0

= Unimplemented or Reserved

Figure 5-16. Left Justified, ATD Conversion Result Register, Low Byte (ATDDRxL)

5.3.2.13.2 Right Justified Result Data

	7	6	5	4	3	2	1	0	
R	0	0	0	0	0	0	BIT 9 MSB	BIT 8	10-bit data
R	0	0	0	0	0	0	0	0	8-bit data
W									
Reset	0	0	0	0	0	0	0	0	

= Unimplemented or Reserved

Figure 5-17. Right Justified, ATD Conversion Result Register, High Byte (ATDDRxH)

	7	6	5	4	3	2	1	0	
R	BIT 7	BIT 6	BIT 5	BIT 4	BIT 3	BIT 2	BIT 1	BIT 0	10-bit data
R	BIT 7 MSB	BIT 6	BIT 5	BIT 4	BIT 3	BIT 2	BIT 1	BIT 0	8-bit data
W									
Reset	0	0	0	0	0	0	0	0	

= Unimplemented or Reserved

Figure 5-18. Right Justified, ATD Conversion Result Register, Low Byte (ATDDRxL)

5.4 Functional Description

The ATD is structured in an analog and a digital sub-block.

5.4.1 Analog Sub-Block

The analog sub-block contains all analog electronics required to perform a single conversion. Separate power supplies V_{DDA} and V_{SSA} allow to isolate noise of other MCU circuitry from the analog sub-block.

5.4.1.1 Sample and Hold Machine

The sample and hold (S/H) machine accepts analog signals from the external surroundings and stores them as capacitor charge on a storage node.

The sample process uses a two stage approach. During the first stage, the sample amplifier is used to quickly charge the storage node.The second stage connects the input directly to the storage node to complete the sample for high accuracy.

When not sampling, the sample and hold machine disables its own clocks. The analog electronics still draw their quiescent current. The power down (ADPU) bit must be set to disable both the digital clocks and the analog power consumption.

The input analog signals are unipolar and must fall within the potential range of V_{SSA} to V_{DDA}.

5.4.1.2 Analog Input Multiplexer

The analog input multiplexer connects one of the 8 external analog input channels to the sample and hold machine.

5.4.1.3 Sample Buffer Amplifier

The sample amplifier is used to buffer the input analog signal so that the storage node can be quickly charged to the sample potential.

5.4.1.4 Analog-to-Digital (A/D) Machine

The A/D Machine performs analog to digital conversions. The resolution is program selectable at either 8 or 10 bits. The A/D machine uses a successive approximation architecture. It functions by comparing the stored analog sample potential with a series of digitally generated analog potentials. By following a binary search algorithm, the A/D machine locates the approximating potential that is nearest to the sampled potential.

When not converting the A/D machine disables its own clocks. The analog electronics still draws quiescent current. The power down (ADPU) bit must be set to disable both the digital clocks and the analog power consumption.

Only analog input signals within the potential range of V_{RL} to V_{RH} (A/D reference potentials) will result in a non-railed digital output codes.

5.4.2 Digital Sub-Block

This subsection explains some of the digital features in more detail. See register descriptions for all details.

5.4.2.1 External Trigger Input

The external trigger feature allows the user to synchronize ATD conversions to the external environment events rather than relying on software to signal the ATD module when ATD conversions are to take place. The external trigger signal (out of reset ATD channel 7, configurable in ATDCTL1) is programmable to be edge or level sensitive with polarity control. Table 5-23 gives a brief description of the different combinations of control bits and their effect on the external trigger function.

Table 5-23. External Trigger Control Bits

ETRIGLE	ETRIGP	ETRIGE	SCAN	Description
X	X	0	0	Ignores external trigger. Performs one conversion sequence and stops.
X	X	0	1	Ignores external trigger. Performs continuous conversion sequences.
0	0	1	X	Falling edge triggered. Performs one conversion sequence per trigger.
0	1	1	X	Rising edge triggered. Performs one conversion sequence per trigger.
1	0	1	X	Trigger active low. Performs continuous conversions while trigger is active.
1	1	1	X	Trigger active high. Performs continuous conversions while trigger is active.

During a conversion, if additional active edges are detected the overrun error flag ETORF is set.

In either level or edge triggered modes, the first conversion begins when the trigger is received. In both cases, the maximum latency time is one bus clock cycle plus any skew or delay introduced by the trigger circuitry.

NOTE

The conversion results for the external trigger ATD channel 7 have no meaning while external trigger mode is enabled.

Once ETRIGE is enabled, conversions cannot be started by a write to ATDCTL5, but rather must be triggered externally.

If the level mode is active and the external trigger both de-asserts and re-asserts itself during a conversion sequence, this does not constitute an overrun; therefore, the flag is not set. If the trigger is left asserted in level mode while a sequence is completing, another sequence will be triggered immediately.

5.4.2.2 General Purpose Digital Input Port Operation

The input channel pins can be multiplexed between analog and digital data. As analog inputs, they are multiplexed and sampled to supply signals to the A/D converter. As digital inputs, they supply external input data that can be accessed through the digital port register PORTAD (input-only).

The analog/digital multiplex operation is performed in the input pads. The input pad is always connected to the analog inputs of the ATD. The input pad signal is buffered to the digital port registers. This buffer can be turned on or off with the ATDDIEN register. This is important so that the buffer does not draw excess current when analog potentials are presented at its input.

5.4.2.3 Low Power Modes

The ATD can be configured for lower MCU power consumption in 3 different ways:

1. Stop mode: This halts A/D conversion. Exit from stop mode will resume A/D conversion, but due to the recovery time the result of this conversion should be ignored.
2. Wait mode with AWAI = 1: This halts A/D conversion. Exit from wait mode will resume A/D conversion, but due to the recovery time the result of this conversion should be ignored.
3. Writing ADPU = 0 (Note that all ATD registers remain accessible.): This aborts any A/D conversion in progress.

Note that the reset value for the ADPU bit is zero. Therefore, when this module is reset, it is reset into the power down state.

5.5 Resets

At reset the ATD is in a power down state. The reset state of each individual bit is listed within the Register Description section (see Section 5.3, “Memory Map and Register Definition”), which details the registers and their bit-field.

5.6 Interrupts

The interrupt requested by the ATD is listed in Table 5-24. Refer to the device overview chapter for related vector address and priority.

Table 5-24. ATD Interrupt Vectors

Interrupt Source	CCR Mask	Local Enable
Sequence complete interrupt	I bit	ASCIE in ATDCTL2

See register descriptions for further details.

Chapter 6
XGATE (S12XGATEV2)

6.1 Introduction

The XGATE module is a peripheral co-processor that allows autonomous data transfers between the MCU's peripherals and the internal memories. It has a built in RISC core that is able to pre-process the transferred data and perform complex communication protocols.

The XGATE module is intended to increase the MCU's data throughput by lowering the S12X_CPU's interrupt load.

Figure 6-1 gives an overview on the XGATE architecture.

This document describes the functionality of the XGATE module, including:

- XGATE registers (Section 6.3, "Memory Map and Register Definition")
- XGATE RISC core (**Section 6.4.1, "XGATE RISC Core**")
- Hardware semaphores (Section 6.4.4, "Semaphores")
- Interrupt handling (Section 6.5, "Interrupts")
- Debug features (Section 6.6, "Debug Mode")
- Security (Section 6.7, "Security")
- Instruction set (Section 6.8, "Instruction Set")

6.1.1 Glossary of Terms

XGATE Request

A service request from a peripheral module which is directed to the XGATE by the S12X_INT module (see Figure 6-1).

XGATE Channel

The resources in the XGATE module (i.e. Channel ID number, Priority level, Service Request Vector, Interrupt Flag) which are associated with a particular XGATE Request.

XGATE Channel ID

A 7-bit identifier associated with an XGATE channel. In S12X designs valid Channel IDs range from $78 to $09.

XGATE Channel Interrupt

An S12X_CPU interrupt that is triggered by a code sequence running on the XGATE module.

XGATE Software Channel

Special XGATE channel that is not associated with any peripheral service request. A Software Channel is triggered by its Software Trigger Bit which is implemented in the XGATE module.

XGATE Semaphore

A set of hardware flip-flops that can be exclusively set by either the S12X_CPU or the XGATE. (see 6.4.4/6-204)

XGATE Thread

A code sequence which is executed by the XGATE's RISC core after receiving an XGATE request.

XGATE Debug Mode

A special mode in which the XGATE's RISC core is halted for debug purposes. This mode enables the XGATE's debug features (see 6.6/6-206).

XGATE Software Error

The XGATE is able to detect a number of error conditions caused by erratic software (see 6.4.5/6-205). These error conditions will cause the XGATE to seize program execution and flag an Interrupt to the S12X_CPU.

Word

A 16 bit entity.

Byte

An 8 bit entity.

6.1.2 Features

The XGATE module includes these features:

- Data movement between various targets (i.e Flash, RAM, and peripheral modules)
- Data manipulation through built in RISC core
- Provides up to 112 XGATE channels
  - 104 hardware triggered channels
  - 8 software triggered channels
- Hardware semaphores which are shared between the S12X_CPU and the XGATE module
- Able to trigger S12X_CPU interrupts upon completion of an XGATE transfer
- Software error detection to catch erratic application code

6.1.3 Modes of Operation

There are four run modes on S12X devices.

- Run mode, wait mode, stop mode

  The XGATE is able to operate in all of these three system modes. Clock activity will be automatically stopped when the XGATE module is idle.
- Freeze mode (BDM active)

In freeze mode all clocks of the XGATE module may be stopped, depending on the module configuration (see Section 6.3.1.1, “XGATE Control Register (XGMCTL)”).

6.1.4 Block Diagram

Figure Figure 6-1 shows a block diagram of the XGATE.

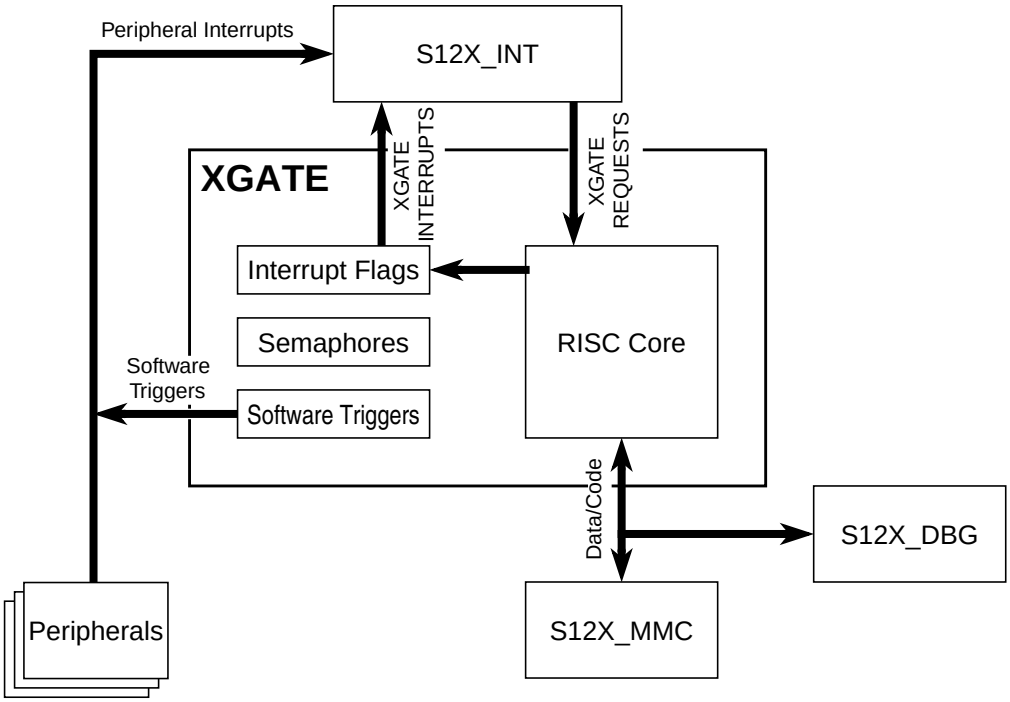

Figure 6-1. XGATE Block Diagram

6.2 External Signal Description

The XGATE module has no external pins.

6.3 Memory Map and Register Definition

This section provides a detailed description of address space and registers used by the XGATE module.

The memory map for the XGATE module is given below in Figure 6-2.The address listed for each register is the sum of a base address and an address offset. The base address is defined at the SoC level and the address offset is defined at the module level. Reserved registers read zero. Write accesses to the reserved registers have no effect.

6.3.1 Register Descriptions

This section consists of register descriptions in address order. Each description includes a standard register diagram with an associated figure number. Details of register bit and field function follow the register diagrams, in bit order.

Register Name		15	14	13	12	11	10	9	8	7	6	5	4	3	2	1	0
XGMCTL	R	0	0	0	0	0	0	0	0	XGE	XGFRZ	XGDBG	XGSS	XG FACT	0	XG SWEIF	XGIE
	W	XGEM	XG FRZM	XG DBGM	XGSSM	XG FACTM		XG SWEIFM	XGIEM								
XGMCHID	R									0	XGCHID[6:0]						
	W																
Reserved	R																
	W																
Reserved	R																
	W																
Reserved	R																
	W																
XGVBR	R	XGVBR[15:1]															0
	W																

= Unimplemented or Reserved

Figure 6-2. XGATE Register Summary (Sheet 1 of 3)

Register Name		127	126	125	124	123	122	121	120	119	118	117	116	115	114	113	112
XGIF	R	0	0	0	0	0	0	0	XGIF_78	XGF_77	XGIF_76	XGIF_75	XGIF_74	XGIF_73	XGIF_72	XGIF_71	XGIF_70
	W																

Register Name		111	110	109	108	107	106	105	104	103	102	101	100	99	98	97	96
XGIF	R	XGIF_6F	XGIF_6E	XGIF_6D	XGIF_6C	XGIF_6B	XGIF_6A	XGIF_69	XGIF_68	XGF_67	XGIF_66	XGIF_65	XGIF_64	XGIF_63	XGIF_62	XGIF_61	XGIF_60
	W																

Register Name		95	94	93	92	91	90	89	88	87	86	85	84	83	82	81	80
XGIF	R	XGIF_5F	XGIF_5E	XGIF_5D	XGIF_5C	XGIF_5B	XGIF_5A	XGIF_59	XGIF_58	XGF_57	XGIF_56	XGIF_55	XGIF_54	XGIF_53	XGIF_52	XGIF_51	XGIF_50
	W																

Register Name		79	78	77	76	75	74	73	72	71	70	69	68	67	66	65	64
XGIF	R	XGIF_4F	XGIF_4E	XGIF_4D	XGIF_4C	XGIF_4B	XGIF_4A	XGIF_49	XGIF_48	XGF _47	XGIF_46	XGIF_45	XGIF_44	XGIF_43	XGIF_42	XGIF_41	XGIF_40
	W																

Register Name		63	62	61	60	59	58	57	56	55	54	53	52	51	50	49	48
XGIF	R	XGIF_3F	XGIF_3E	XGIF_3D	XGIF_3C	XGIF_3B	XGIF_3A	XGIF_39	XGIF_38	XGF _37	XGIF_36	XGIF_35	XGIF_34	XGIF_33	XGIF_32	XGIF_31	XGIF_30
	W																

Register Name		47	46	45	44	43	42	41	40	39	38	37	36	35	34	33	32
XGIF	R	XGIF_2F	XGIF_2E	XGIF_2D	XGIF_2C	XGIF_2B	XGIF_2A	XGIF_29	XGIF_28	XGF _27	XGIF_26	XGIF_25	XGIF_24	XGIF_23	XGIF_22	XGIF_21	XGIF_20
	W																

Register Name		31	30	29	28	27	26	25	24	23	22	21	20	19	18	17	16
XGIF	R	XGIF_1F	XGIF_1E	XGIF_1D	XGIF_1C	XGIF_1B	XGIF_1A	XGIF_19	XGIF_18	XGF _17	XGIF_16	XGIF_15	XGIF_14	XGIF_13	XGIF_12	XGIF_11	XGIF_10
	W																

Register Name		15	14	13	12	11	10	9	8	7	6	5	4	3	2	1	0
XGIF	R	XGIF_0F	XGIF_0E	XGIF_0D	XGIF_0C	XGIF_0B	XGIF_0A	XGIF_09	0	0	0	0	0	0	0	0	0
	W																

= Unimplemented or Reserved

Figure 6-2. XGATE Register Summary (Sheet 2 of 3)

		15	14	13	12	11	10	9	8	7	6	5	4	3	2	1	0
XGSWTM	R	0	0	0	0	0	0	0	0	XGSWT[7:0]							
	W	XGSWTM[7:0]															
XGSEMM	R	0	0	0	0	0	0	0	0	XGSEM[7:0]							
	W	XGSEMM[7:0]															
Reserved	R																
	W																
XGCCR	R									0	0	0	0	XGN	XGZ	XGV	XGC
	W																
XGPC	R	XGPC															
	W																
Reserved	R																
	W																
Reserved	R																
	W																
XGR1	R	XGR1															
	W																
XGR2	R	XGR2															
	W																
XGR3	R	XGR3															
	W																
XGR4	R	XGR4															
	W																
XGR5	R	XGR5															
	W																
XGR6	R	XGR6															
	W																
XGR7	R	XGR7															
	W																

= Unimplemented or Reserved

Figure 6-2. XGATE Register Summary (Sheet 3 of 3)

6.3.1.1 XGATE Control Register (XGMCTL)

All module level switches and flags are located in the module control register Figure 6-3.

	15	14	13	12	11	10	9	8	7	6	5	4	3	2	1	0
R	0	0	0	0	0	0	0	0	XGE	XGFRZ	XGDBG	XGSS	XGFACT	0	XG SWEIF	XGIE
W	XGEM	XG FRZM	XG DBGM	XG SSM	XG FACTM		XG SWEIFM	XGIEM								
Reset	0	0	0	0	0	0	0	0	0	0	0	0	0	0	0	0

= Unimplemented or Reserved

Figure 6-3. XGATE Control Register (XGMCTL)

Read: Anytime

Write: Anytime

Table 6-1. XGMCTL Field Descriptions (Sheet 1 of 3)

Field	Description
15 XGEM	**XGE Mask** — This bit controls the write access to the XGE bit. The XGE bit can only be set or cleared if a "1" is written to the XGEM bit in the same register access. Read: This bit will always read "0". Write: 0 Disable write access to the XGE in the same bus cycle 1 Enable write access to the XGE in the same bus cycle
14 XGFRZM	**XGFRZ Mask** — This bit controls the write access to the XGFRZ bit. The XGFRZ bit can only be set or cleared if a "1" is written to the XGFRZM bit in the same register access. Read: This bit will always read "0". Write: 0 Disable write access to the XGFRZ in the same bus cycle 1 Enable write access to the XGFRZ in the same bus cycle
13 XGDBGM	**XGDBG Mask** — This bit controls the write access to the XGDBG bit. The XGDBG bit can only be set or cleared if a "1" is written to the XGDBGM bit in the same register access. Read: This bit will always read "0". Write: 0 Disable write access to the XGDBG in the same bus cycle 1 Enable write access to the XGDBG in the same bus cycle
12 XGSSM	**XGSS Mask** — This bit controls the write access to the XGSS bit. The XGSS bit can only be set or cleared if a "1" is written to the XGSSM bit in the same register access. Read: This bit will always read "0". Write: 0 Disable write access to the XGSS in the same bus cycle 1 Enable write access to the XGSS in the same bus cycle

Table 6-1. XGMCTL Field Descriptions (Sheet 2 of 3)

Field	Description
11 XGFACTM	**XGFACT Mask** — This bit controls the write access to the XGFACT bit. The XGFACT bit can only be set or cleared if a "1" is written to the XGFACTM bit in the same register access. Read: This bit will always read "0". Write: 0 Disable write access to the XGFACT in the same bus cycle 1 Enable write access to the XGFACT in the same bus cycle
9 XGSWEIFM	**XGSWEIF Mask** — This bit controls the write access to the XGSWEIF bit. The XGSWEIF bit can only be cleared if a "1" is written to the XGSWEIFM bit in the same register access. Read: This bit will always read "0". Write: 0 Disable write access to the XGSWEIF in the same bus cycle 1 Enable write access to the XGSWEIF in the same bus cycle
8 XGIEM	**XGIE Mask** — This bit controls the write access to the XGIE bit. The XGIE bit can only be set or cleared if a "1" is written to the XGIEM bit in the same register access. Read: This bit will always read "0". Write: 0 Disable write access to the XGIE in the same bus cycle 1 Enable write access to the XGIE in the same bus cycle
7 XGE	**XGATE Module Enable** — This bit enables the XGATE module. If the XGATE module is disabled, pending XGATE requests will be ignored. The thread that is executed by the RISC core while the XGE bit is cleared will continue to run. Read: 0 XGATE module is disabled 1 XGATE module is enabled Write: 0 Disable XGATE module 1 Enable XGATE module
6 XGFRZ	**Halt XGATE in Freeze Mode** — The XGFRZ bit controls the XGATE operation in Freeze Mode (BDM active). Read: 0 RISC core operates normally in Freeze (BDM active) 1 RISC core stops in Freeze Mode (BDM active) Write: 0 Don’t stop RISC core in Freeze Mode (BDM active) 1 Stop RISC core in Freeze Mode (BDM active)
5 XGDBG	**XGATE Debug Mode** — This bit indicates that the XGATE is in Debug Mode (see Section 6.6, “Debug Mode”). Debug Mode can be entered by Software Breakpoints (BRK instruction), Tagged or Forced Breakpoints (see **S12X_DBG Section**), or by writing a "1" to this bit. Read: 0 RISC core is not in Debug Mode 1 RISC core is in Debug Mode Write: 0 Leave Debug Mode 1 Enter Debug Mode **Note:** Freeze Mode and Software Error Interrupts have no effect on the XGDBG bit.

Table 6-1. XGMCTL Field Descriptions (Sheet 3 of 3)

Field	Description
4 XGSS	**XGATE Single Step** — This bit forces the execution of a single instruction if the XGATE is in DEBUG Mode and no software error has occurred (XGSWEIF cleared). Read: 0 No single step in progress 1 Single step in progress Write 0 No effect 1 Execute a single RISC instruction **Note:** Invoking a Single Step will cause the XGATE to temporarily leave Debug Mode until the instruction has been executed.
3 XGFACT	**Fake XGATE Activity** — This bit forces the XGATE to flag activity to the MCU even when it is idle. When it is set the MCU will never enter system stop mode which assures that peripheral modules will be clocked during XGATE idle periods Read: 0 XGATE will only flag activity if it is not idle or in debug mode. 1 XGATE will always signal activity to the MCU. Write: 0 Only flag activity if not idle or in debug mode. 1 Always signal XGATE activity.
1 XGSWEIF	**XGATE Software Error Interrupt Flag** — This bit signals a pending Software Error Interrupt. It is set if the RISC core detects an error condition (see Section 6.4.5, “Software Error Detection”). The RISC core is stopped while this bit is set. Clearing this bit will terminate the current thread and cause the XGATE to become idle. Read: 0 Software Error Interrupt is not pending 1 Software Error Interrupt is pending if XGIE is set Write: 0 No effect 1 Clears the XGSWEIF bit
0 XGIE	**XGATE Interrupt Enable** — This bit acts as a global interrupt enable for the XGATE module Read: 0 All XGATE interrupts disabled 1 All XGATE interrupts enabled Write: 0 Disable all XGATE interrupts 1 Enable all XGATE interrupts

6.3.1.2 XGATE Channel ID Register (XGCHID)

The XGATE channel ID register (Figure 6-4) shows the identifier of the XGATE channel that is currently active. This register will read “$00” if the XGATE module is idle. In debug mode this register can be used to start and terminate threads (see Section 6.6.1, “Debug Features”).

	7	6	5	4	3	2	1	0
R	0	XGCHID[6:0]						
W								
Reset	0	0	0	0	0	0	0	0

= Unimplemented or Reserved

Figure 6-4. XGATE Channel ID Register (XGCHID)

Read: Anytime

Write: In Debug Mode

Table 6-2. XGCHID Field Descriptions

Field	Description
6–0 XGCHID[6:0]	**Request Identifier** — ID of the currently active channel

6.3.1.3 XGATE Vector Base Address Register (XGVBR)

The vector base address register (Figure 6-5 and Figure 6-6) determines the location of the XGATE vector block.

	15	14	13	12	11	10	9	8	7	6	5	4	3	2	1	0
R	XGVBR[15:1]															0
W																
Reset	0	0	0	0	0	0	0	0	0	0	0	0	0	0	0	0

= Unimplemented or Reserved

Figure 6-5. XGATE Vector Base Address Register (XGVBR)

Read: Anytime

Write: Only if the module is disabled (XGE = 0) and idle (XGCHID = $00))

Table 6-3. XGVBR Field Descriptions

Field	Description
15–1 XBVBR[15:1]	**Vector Base Address** — The XGVBR register holds the start address of the vector block in the XGATE memory map.

6.3.1.4 XGATE Channel Interrupt Flag Vector (XGIF)

The interrupt flag vector (Figure 6-6) provides access to the interrupt flags bits of each channel. Each flag may be cleared by writing a "1" to its bit location.

	127	126	125	124	123	122	121	120	119	118	117	116	115	114	113	112
R	0	0	0	0	0	0	0	XGIF_78	XGF_77	XGIF_76	XGIF_75	XGIF_74	XGIF_73	XGIF_72	XGIF_71	XGIF_70
W																
Reset	0	0	0	0	0	0	0	0	0	0	0	0	0	0	0	0

	111	110	109	108	107	106	105	104	103	102	101	100	99	98	97	96
R	XGIF_6F	XGIF_6E	XGIF_6D	XGIF_6C	XGIF_6B	XGIF_6A	XGIF_69	XGIF_68	XGF_67	XGIF_66	XGIF_65	XGIF_64	XGIF_63	XGIF_62	XGIF_61	XGIF_60
W																
Reset	0	0	0	0	0	0	0	0	0	0	0	0	0	0	0	0

	95	94	93	92	91	90	89	88	87	86	85	84	83	82	81	80
R	XGIF_5F	XGIF_5E	XGIF_5D	XGIF_5C	XGIF_5B	XGIF_5A	XGIF_59	XGIF_58	XGF_57	XGIF_56	XGIF_55	XGIF_54	XGIF_53	XGIF_52	XGIF_51	XGIF_50
W																
Reset	0	0	0	0	0	0	0	0	0	0	0	0	0	0	0	0

	79	78	77	76	75	74	73	72	71	70	69	68	67	66	65	64
R	XGIF_4F	XGIF_4E	XGIF_4D	XGIF_4C	XGIF_4B	XGIF_4A	XGIF_49	XGIF_48	XGF _47	XGIF_46	XGIF_45	XGIF_44	XGIF_43	XGIF_42	XGIF_41	XGIF_40
W																
Reset	0	0	0	0	0	0	0	0	0	0	0	0	0	0	0	0

	63	62	61	60	59	58	57	56	55	54	53	52	51	50	49	48
R	XGIF_3F	XGIF_3E	XGIF_3D	XGIF_3C	XGIF_3B	XGIF_3A	XGIF_39	XGIF_38	XGF _37	XGIF_36	XGIF_35	XGIF_34	XGIF_33	XGIF_32	XGIF_31	XGIF_30
W																
Reset	0	0	0	0	0	0	0	0	0	0	0	0	0	0	0	0

	47	46	45	44	43	42	41	40	39	38	37	36	35	34	33	32
R	XGIF_2F	XGIF_2E	XGIF_2D	XGIF_2C	XGIF_2B	XGIF_2A	XGIF_29	XGIF_28	XGF _27	XGIF_26	XGIF_25	XGIF_24	XGIF_23	XGIF_22	XGIF_21	XGIF_20
W																
Reset	0	0	0	0	0	0	0	0	0	0	0	0	0	0	0	0

	31	30	29	28	27	26	25	24	23	22	21	20	19	18	17	16
R	XGIF_1F	XGIF_1E	XGIF_1D	XGIF_1C	XGIF_1B	XGIF_1A	XGIF_19	XGIF_18	XGF _17	XGIF_16	XGIF_15	XGIF_14	XGIF_13	XGIF_12	XGIF_11	XGIF_10
W																
Reset	0	0	0	0	0	0	0	0	0	0	0	0	0	0	0	0

	15	14	13	12	11	10	9	8	7	6	5	4	3	2	1	0
R	XGIF_0F	XGIF_0E	XGIF_0D	XGIF_0C	XGIF_0B	XGIF_0A	XGIF_09	0	0	0	0	0	0	0	0	0
W																
Reset	0	0	0	0	0	0	0	0	0	0	0	0	0	0	0	0

= Unimplemented or Reserved

Figure 6-6. XGATE Channel Interrupt Flag Vector (XGIF)

Read: Anytime

Write: Anytime

Table 6-4. XGIV Field Descriptions

Field	Description
127–9 XGIF[78:9]	**Channel Interrupt Flags** — These bits signal pending channel interrupts. They can only be set by the RISC core. Each flag can be cleared by writing a "1" to its bit location. Unimplemented interrupt flags will always read "0". Refer to Section “Interrupts” of the **SoC Guide** for a list of implemented Interrupts. Read: 0 Channel interrupt is not pending 1 Channel interrupt is pending if XGIE is set Write: 0 No effect 1 Clears the interrupt flag

NOTE

Suggested Mnemonics for accessing the interrupt flag vector on a word basis are:

XGIF_7F_70 (XGIF[127:112]),
XGIF_6F_60 (XGIF[111:96]),
XGIF_5F_50 (XGIF[95:80]),
XGIF_4F_40 (XGIF[79:64]),
XGIF_3F_30 (XGIF[63:48]),
XGIF_2F_20 (XGIF[47:32]),
XGIF_1F_10 (XGIF[31:16]),
XGIF_0F_00 (XGIF[15:0])

6.3.1.5 XGATE Software Trigger Register (XGSWT)

The eight software triggers of the XGATE module can be set and cleared through the XGATE software trigger register (Figure 6-7). The upper byte of this register, the software trigger mask, controls the write access to the lower byte, the software trigger bits. These bits can be set or cleared if a "1" is written to the associated mask in the same bus cycle.

	15	14	13	12	11	10	9	8	7	6	5	4	3	2	1	0
R	0	0	0	0	0	0	0	0	XGSWT[7:0]							
W	XGSWTM[7:0]															
Reset	0	0	0	0	0	0	0	0	0	0	0	0	0	0	0	0

Figure 6-7. XGATE Software Trigger Register (XGSWT)

Read: Anytime

Write: Anytime

Table 6-5. XGSWT Field Descriptions

Field	Description
15–8 XGSWTM[7:0]	**Software Trigger Mask** — These bits control the write access to the XGSWT bits. Each XGSWT bit can only be written if a "1" is written to the corresponding XGSWTM bit in the same access. Read: These bits will always read "0". Write: 0 Disable write access to the XGSWT in the same bus cycle 1 Enable write access to the corresponding XGSWT bit in the same bus cycle
7–0 XGSWT[7:0]	**Software Trigger Bits** — These bits act as interrupt flags that are able to trigger XGATE software channels. They can only be set and cleared by software. Read: 0 No software trigger pending 1 Software trigger pending if the XGIE bit is set Write: 0 Clear Software Trigger 1 Set Software Trigger

NOTE

The XGATE channel IDs that are associated with the eight software triggers are determined on chip integration level. (see Section “Interrupts” of the **Soc Guide**)

XGATE software triggers work like any peripheral interrupt. They can be used as XGATE requests as well as S12X_CPU interrupts. The target of the software trigger must be selected in the S12X_INT module.

6.3.1.6 XGATE Semaphore Register (XGSEM)

The XGATE provides a set of eight hardware semaphores that can be shared between the S12X_CPU and the XGATE RISC core. Each semaphore can either be unlocked, locked by the S12X_CPU or locked by the RISC core. The RISC core is able to lock and unlock a semaphore through its SSEM and CSEM instructions. The S12X_CPU has access to the semaphores through the XGATE semaphore register (Figure 6-8). Refer to section Section 6.4.4, “Semaphores” for details.

	15	14	13	12	11	10	9	8	7	6	5	4	3	2	1	0
R	0	0	0	0	0	0	0	0	XGSEM[7:0]							
W	XGSEMM[7:0]															
Reset	0	0	0	0	0	0	0	0	0	0	0	0	0	0	0	0

Figure 6-8. XGATE Semaphore Register (XGSEM)

Read: Anytime

Write: Anytime (see Section 6.4.4, “Semaphores”)

Table 6-6. XGSEM Field Descriptions

Field	Description
15–8 XGSEMM[7:0]	**Semaphore Mask** — These bits control the write access to the XGSEM bits. Read: These bits will always read "0". Write: 0 Disable write access to the XGSEM in the same bus cycle 1 Enable write access to the XGSEM in the same bus cycle
7–0 XGSEM[7:0]	**Semaphore Bits** — These bits indicate whether a semaphore is locked by the S12X_CPU. A semaphore can be attempted to be set by writing a "1" to the XGSEM bit and to the corresponding XGSEMM bit in the same write access. Only unlocked semaphores can be set. A semaphore can be cleared by writing a "0" to the XGSEM bit and a "1" to the corresponding XGSEMM bit in the same write access. Read: 0 Semaphore is unlocked or locked by the RISC core 1 Semaphore is locked by the S12X_CPU Write: 0 Clear semaphore if it was locked by the S12X_CPU 1 Attempt to lock semaphore by the S12X_CPU

6.3.1.7 XGATE Condition Code Register (XGCCR)

The XGCCR register (Figure 6-9) provides access to the RISC core's condition code register.

	7	6	5	4	3	2	1	0
R	0	0	0	0	XGN	XGZ	XGV	XGC
W								
Reset	0	0	0	0	0	0	0	0

= Unimplemented or Reserved

Figure 6-9. XGATE Condition Code Register (XGCCR)

Read: In debug mode if unsecured

Write: In debug mode if unsecured

Table 6-7. XGCCR Field Descriptions

Field	Description
3 XGN	**Sign Flag** — The RISC core's Sign flag
2 XGZ	**Zero Flag** — The RISC core's Zero flag
1 XGV	**Overflow Flag** — The RISC core's Overflow flag
0 XGC	**Carry Flag** — The RISC core's Carry flag

6.3.1.8 XGATE Program Counter Register (XGPC)

The XGPC register (Figure 6-10) provides access to the RISC core's program counter.

	15	14	13	12	11	10	9	8	7	6	5	4	3	2	1	0
R W	XGPC															
Reset	0	0	0	0	0	0	0	0	0	0	0	0	0	0	0	0

Figure 6-10. XGATE Program Counter Register (XGPC)

Figure 6-11.

Read: In debug mode if unsecured

Write: In debug mode if unsecured

Table 6-8. XGPC Field Descriptions

Field	Description
15–0 XGPC[15:0]	**Program Counter** — The RISC core's program counter

6.3.1.9 XGATE Register 1 (XGR1)

The XGR1 register (Figure 6-12) provides access to the RISC core's register 1.

	15	14	13	12	11	10	9	8	7	6	5	4	3	2	1	0
R W	XGR1															
Reset	0	0	0	0	0	0	0	0	0	0	0	0	0	0	0	0

Figure 6-12. XGATE Register 1 (XGR1)

Read: In debug mode if unsecured

Write: In debug mode if unsecured

Table 6-9. XGR1 Field Descriptions

Field	Description
15–0 XGR1[15:0]	**XGATE Register 1** — The RISC core's register 1

6.3.1.10 XGATE Register 2 (XGR2)

The XGR2 register (Figure 6-13) provides access to the RISC core's register 2.

	15	14	13	12	11	10	9	8	7	6	5	4	3	2	1	0
R W	XGR2															
Reset	0	0	0	0	0	0	0	0	0	0	0	0	0	0	0	0

Figure 6-13. XGATE Register 2 (XGR2)

Read: In debug mode if unsecured

Write: In debug mode if unsecured

Table 6-10. XGR2 Field Descriptions

Field	Description
15–0 XGR2[15:0]	**XGATE Register 2** — The RISC core's register 2

6.3.1.11 XGATE Register 3 (XGR3)

The XGR3 register (Figure 6-14) provides access to the RISC core's register 3.

	15	14	13	12	11	10	9	8	7	6	5	4	3	2	1	0
R W	XGR3															
Reset	0	0	0	0	0	0	0	0	0	0	0	0	0	0	0	0

Figure 6-14. XGATE Register 3 (XGR3)

Read: In debug mode if unsecured

Write: In debug mode if unsecured

Table 6-11. XGR3 Field Descriptions

Field	Description
15–0 XGR3[15:0]	**XGATE Register 3** — The RISC core's register 3

6.3.1.12 XGATE Register 4 (XGR4)

The XGR4 register (Figure 6-15) provides access to the RISC core's register 4.

	15	14	13	12	11	10	9	8	7	6	5	4	3	2	1	0
R W	XGR4															
Reset	0	0	0	0	0	0	0	0	0	0	0	0	0	0	0	0

Figure 6-15. XGATE Register 4 (XGR4)

Read: In debug mode if unsecured

Write: In debug mode if unsecured

Table 6-12. XGR4 Field Descriptions

Field	Description
15–0 XGR4[15:0]	**XGATE Register 4** — The RISC core's register 4

6.3.1.13 XGATE Register 5 (XGR5)

The XGR5 register (Figure 6-16) provides access to the RISC core's register 5.

	15	14	13	12	11	10	9	8	7	6	5	4	3	2	1	0
R W	XGR5															
Reset	0	0	0	0	0	0	0	0	0	0	0	0	0	0	0	0

Figure 6-16. XGATE Register 5 (XGR5)

Read: In debug mode if unsecured

Write: In debug mode if unsecured

Table 6-13. XGR5 Field Descriptions

Field	Description
15–0 XGR5[15:0]	**XGATE Register 5** — The RISC core's register 5

6.3.1.14 XGATE Register 6 (XGR6)

The XGR6 register (Figure 6-17) provides access to the RISC core's register 6.

	15	14	13	12	11	10	9	8	7	6	5	4	3	2	1	0
R W	XGR6															
Reset	0	0	0	0	0	0	0	0	0	0	0	0	0	0	0	0

Figure 6-17. XGATE Register 6 (XGR6)

Read: In debug mode if unsecured

Write: In debug mode if unsecured

Table 6-14. XGR6 Field Descriptions

Field	Description
15–0 XGR6[15:0]	**XGATE Register 6** — The RISC core's register 6

6.3.1.15 XGATE Register 7 (XGR7)

The XGR7 register (Figure 6-18) provides access to the RISC core's register 7.

	15	14	13	12	11	10	9	8	7	6	5	4	3	2	1	0
R W	XGR7															
Reset	0	0	0	0	0	0	0	0	0	0	0	0	0	0	0	0

Figure 6-18. XGATE Register 7 (XGR7)

Read: In debug mode if unsecured

Write: In debug mode if unsecured

Table 6-15. XGR7 Field Descriptions

Field	Description
15–0 XGR7[15:0]	**XGATE Register 7** — The RISC core's register 7

6.4 Functional Description

The core of the XGATE module is a RISC processor which is able to access the MCU's internal memories and peripherals (see Figure 6-1). The RISC processor always remains in an idle state until it is triggered by an XGATE request. Then it executes a code sequence that is associated with the request and optionally triggers an interrupt to the S12X_CPU upon completion. Code sequences are not interruptible. A new XGATE request can only be serviced when the previous sequence is finished and the RISC core becomes idle.

The XGATE module also provides a set of hardware semaphores which are necessary to ensure data consistency whenever RAM locations or peripherals are shared with the S12X_CPU.

The following sections describe the components of the XGATE module in further detail.

6.4.1 XGATE RISC Core

The RISC core is a 16 bit processor with an instruction set that is well suited for data transfers, bit manipulations, and simple arithmetic operations (see Section 6.8, "Instruction Set").

It is able to access the MCU's internal memories and peripherals without blocking these resources from the S12X_CPU[1]. Whenever the S12X_CPU and the RISC core access the same resource, the RISC core will be stalled until the resource becomes available again[1].

The XGATE offers a high access rate to the MCU's internal RAM. Depending on the bus load, the RISC core can perform up to two RAM accesses per S12X_CPU bus cycle.

Bus accesses to peripheral registers or flash are slower. A transfer rate of one bus access per S12X_CPU cycle can not be exceeded.

The XGATE module is intended to execute short interrupt service routines that are triggered by peripheral modules or by software.

6.4.2 Programmer's Model

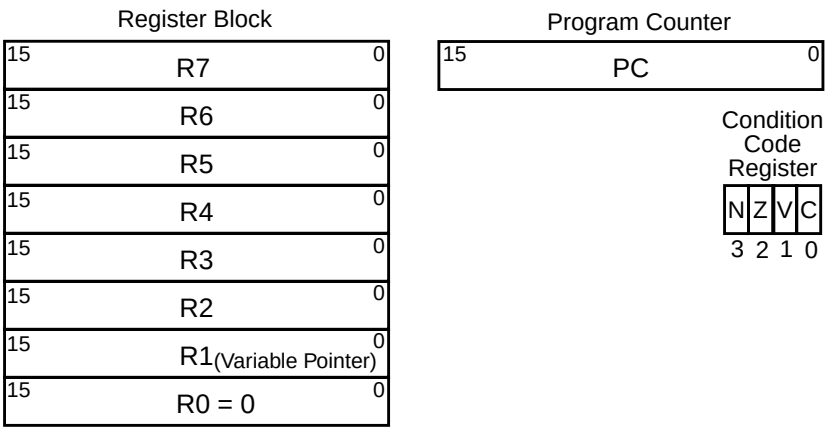

Figure 6-19. Programmer's Model

1. With the exception of PRR registers (see Section "S12X_MMC").

The programmer's model of the XGATE RISC core is shown in Figure 6-19. The processor offers a set of seven general purpose registers (R1 - R7), which serve as accumulators and index registers. An additional eighth register (R0) is tied to the value "$0000". Register R1 has an additional functionality. It is preloaded with the initial variable pointer of the channel's service request vector (see Figure 6-20). The initial content of the remaining general purpose registers is undefined.

The 16 bit program counter allows the addressing of a 64 kbyte address space.

The condition code register contains four bits: the sign bit (S), the zero flag (Z), the overflow flag (V), and the carry bit (C). The initial content of the condition code register is undefined.

6.4.3 Memory Map

The XGATE's RISC core is able to access an address space of 64K bytes. The allocation of memory blocks within this address space is determined on chip level. Refer to the **S12X_MMC Section** for a detailed information.

The XGATE vector block assigns a start address and a variable pointer to each XGATE channel. Its position in the XGATE memory map can be adjusted through the XGVBR register (see Section 6.3.1.3, "XGATE Vector Base Address Register (XGVBR)"). Figure 6-20 shows the layout of the vector block. Each vector consists of two 16 bit words. The first contains the start address of the service routine. This value will be loaded into the program counter before a service routine is executed. The second word is a pointer to the service routine's variable space. This value will be loaded into register R1 before a service routine is executed.

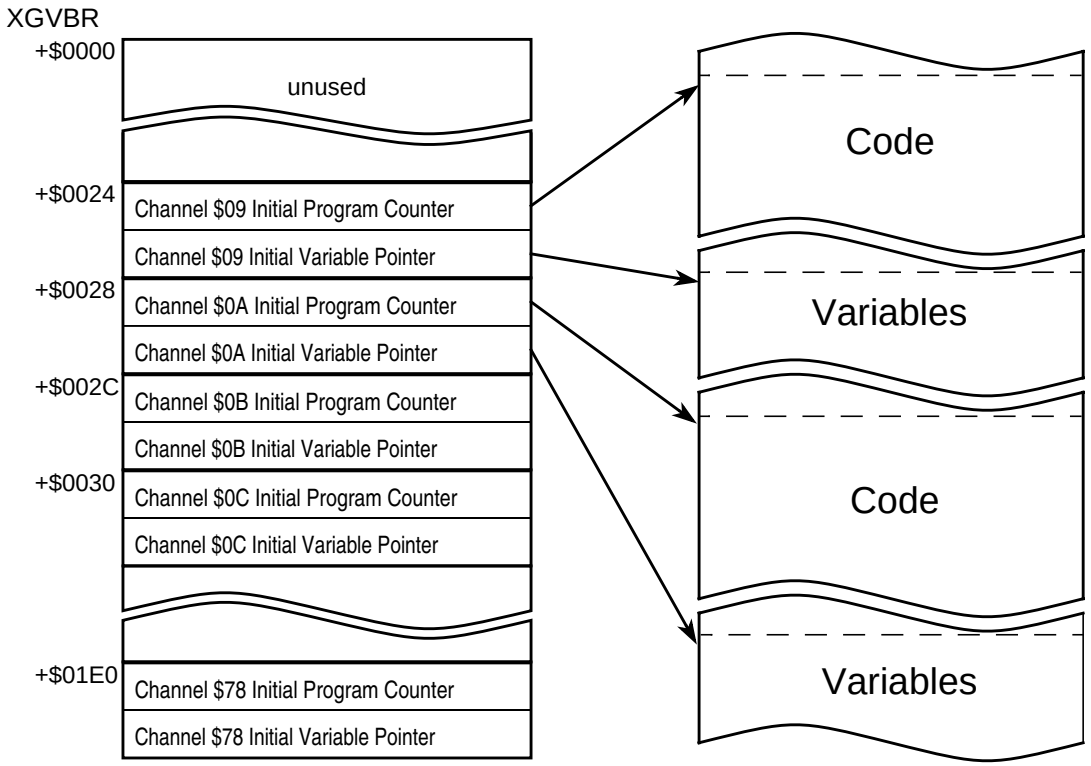

Figure 6-20. XGATE Vector Block

6.4.4 Semaphores

The XGATE module offers a set of eight hardware semaphores. These semaphores provide a mechanism to protect system resources that are shared between two concurrent threads of program execution; one thread running on the S12X_CPU and one running on the XGATE RISC core.

Each semaphore can only be in one of the three states: “Unlocked”, “Locked by S12X_CPU”, and “Locked by XGATE”. The S12X_CPU can check and change a semaphore’s state through the XGATE semaphore register (XGSEM, see Section 6.3.1.6, “XGATE Semaphore Register (XGSEM)”). The RISC core does this through its SSEM and CSEM instructions.

Figure 6-21 illustrates the valid state transitions.

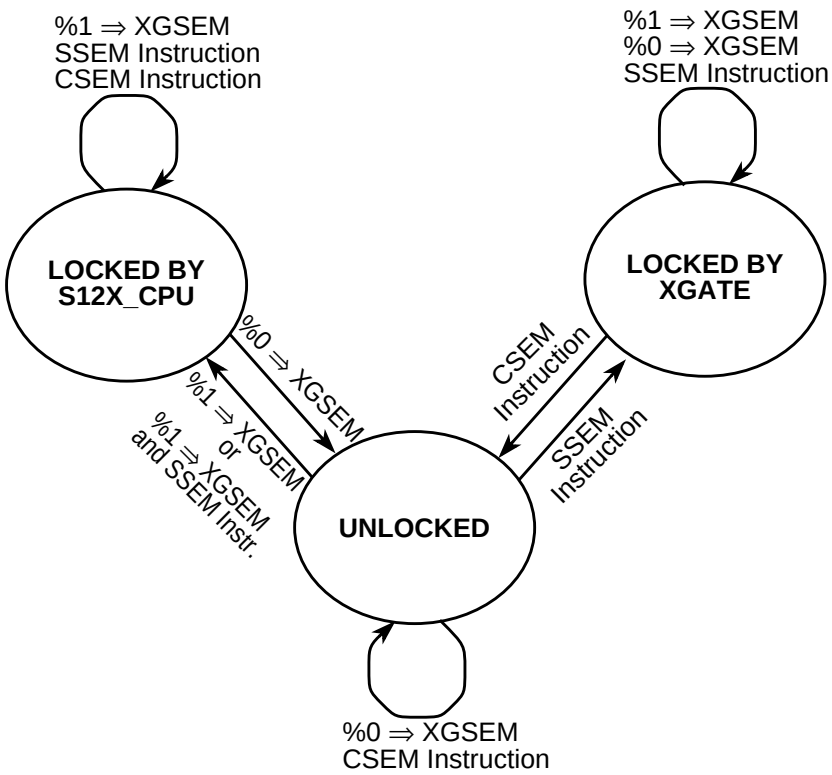

Figure 6-21. Semaphore State Transitions

Figure 6-22 gives an example of the typical usage of the XGATE hardware semaphores.

Two concurrent threads are running on the system. One is running on the S12X_CPU and the other is running on the RISC core. They both have a critical section of code that accesses the same system resource. To guarantee that the system resource is only accessed by one thread at a time, the critical code sequence must be embedded in a semaphore lock/release sequence as shown.

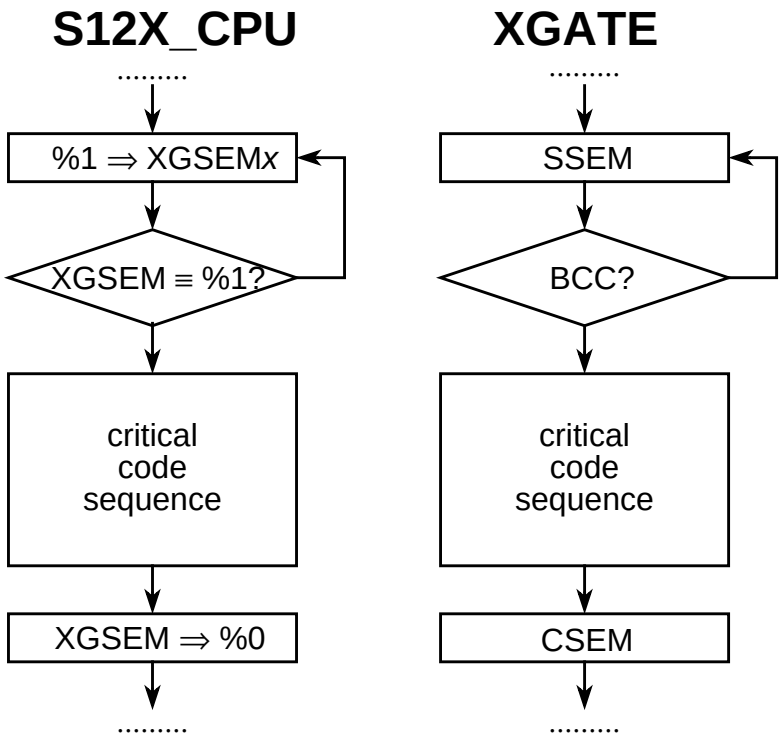

Figure 6-22. Algorithm for Locking and Releasing Semaphores

6.4.5 Software Error Detection

The XGATE module will immediately terminate program execution after detecting an error condition caused by erratic application code. There are three error conditions:

- Execution of an illegal opcode
- Illegal vector or opcode fetches
- Illegal load or store accesses

All opcodes which are not listed in section Section 6.8, “Instruction Set” are illegal opcodes. Illegal vector and opcode fetches as well as illegal load and store accesses are defined on chip level. Refer to the **S12X_MMC Section** for a detailed information.

6.5 Interrupts

6.5.1 Incoming Interrupt Requests

XGATE threads are triggered by interrupt requests which are routed to the XGATE module (see S12X_INT Section). Only a subset of the MCU's interrupt requests can be routed to the XGATE. Which specific interrupt requests these are and which channel ID they are assigned to is documented in Section "Interrupts" of the **SoC Guide**.

6.5.2 Outgoing Interrupt Requests

There are three types of interrupt requests which can be triggered by the XGATE module:

4. Channel interrupts

   For each XGATE channel there is an associated interrupt flag in the XGATE interrupt flag vector (XGIF, see Section 6.3.1.4, "XGATE Channel Interrupt Flag Vector (XGIF)"). These flags can be set through the "SIF" instruction by the RISC core. They are typically used to flag an interrupt to the S12X_CPU when the XGATE has completed one of its tasks.

5. Software triggers

   Software triggers are interrupt flags, which can be set and cleared by software (see Section 6.3.1.5, "XGATE Software Trigger Register (XGSWT)"). They are typically used to trigger XGATE tasks by the S12X_CPU software. However these interrupts can also be routed to the S12X_CPU (see **S12X_INT Section**) and triggered by the XGATE software.

6. Software error interrupt

   The software error interrupt signals to the S12X_CPU the detection of an error condition in the XGATE application code (see Section 6.4.5, "Software Error Detection").

All XGATE interrupts can be disabled by the XGIE bit in the XGATE module control register (XGMCTL, see Section 6.3.1.1, "XGATE Control Register (XGMCTL)").

6.6 Debug Mode

The XGATE debug mode is a feature to allow debugging of application code.

6.6.1 Debug Features

In debug mode the RISC core will be halted and the following debug features will be enabled:

- Read and Write accesses to RISC core registers (XGCCR, XGPC, XGR1–XGR7)[1]

  All RISC core registers can be modified. Leaving debug mode will cause the RISC core to continue program execution with the modified register values.

1. Only possible if MCU is unsecured

- Single Stepping

  Writing a "1" to the XGSS bit will call the RISC core to execute a single instruction. All RISC core registers will be updated accordingly.
- Write accesses to the XGCHID register

  Three operations can be performed by writing to the XGCHID register:
  - Change of channel ID

    If a non-zero value is written to the XGCHID while a thread is active (XGCHID ≠ $00), then the current channel ID will be changed without any influence on the program counter or the other RISC core registers.
  - Start of a thread

    If a non-zero value is written to the XGCHID while the XGATE is idle (XGCHID = $00), then the thread that is associated with the new channel ID will be executed upon leaving debug mode.
  - Termination of a thread

    If zero is written to the XGCHID while a thread is active (XGCHID ≠ $00), then the current thread will be terminated and the XGATE will become idle.

6.6.2 Entering Debug Mode

Debug mode can be entered in four ways:

1. Setting XGDBG to "1"

   Writing a "1" to XGDBG and XGDBGM in the same write access causes the XGATE to enter debug mode upon completion of the current instruction.

   NOTE

   After writing to the XGDBG bit the XGATE will not immediately enter debug mode. Depending on the instruction that is executed at this time there may be a delay of several clock cycles. The XGDBG will read "0" until debug mode is entered.

2. Software breakpoints

   XGATE programs which are stored in the internal RAM allow the use of software breakpoints. A software breakpoint is set by replacing an instruction of the program code with the "BRK" instruction.

   As soon as the program execution reaches the "BRK" instruction, the XGATE enters debug mode. Additionally a software breakpoint request is sent to the S12X_DBG module (see section 4.9 of the **S12X_DBG Section**).

   Upon entering debug mode, the program counter will point to the "BRK" instruction. The other RISC core registers will hold the result of the previous instruction.

   To resume program execution, the "BRK" instruction must be replaced by the original instruction before leaving debug mode.

3. Tagged Breakpoints

   The S12X_DBG module is able to place tags on fetched opcodes. The XGATE is able to enter debug mode right before a tagged opcode is executed (see section 4.9 of the **S12X_DBG Section**). Upon entering debug mode, the program counter will point to the tagged instruction. The other RISC core registers will hold the result of the previous instruction.

4. Forced Breakpoints

   Forced breakpoints are triggered by the S12X_DBG module (see section 4.9 of the **S12X_DBG Section**). When a forced breakpoint occurs, the XGATE will enter debug mode upon completion of the current instruction.

6.6.3 Leaving Debug Mode

Debug mode can only be left by setting the XGDBG bit to "0". If a thread is active (XGCHID has not been cleared in debug mode), program execution will resume at the value of XGPC.

6.7 Security

In order to protect XGATE application code on secured S12X devices, a few restrictions in the debug features have been made. These are:

- Registers XGCCR, XGPC, and XGR1–XGR7 will read zero on a secured device
- Registers XGCCR, XGPC, and XGR1–XGR7 can not be written on a secured device
- Single stepping is not possible on a secured device

6.8 Instruction Set

6.8.1 Addressing Modes

For the ease of implementation the architecture is a strict Load/Store RISC machine, which means all operations must have one of the eight general purpose registers R0 … R7 as their source as well their destination.

All word accesses must work with a word aligned address, that is A[0] = 0!

6.8.1.1 Naming Conventions

RD	Destination register, allowed range is R0–R7
RD.L	Low byte of the destination register, bits [7:0]
RD.H	High byte of the destination register, bits [15:8]
RS, RS1, RS2	Source register, allowed range is R0–R7
RS.L, RS1.L, RS2.L	Low byte of the source register, bits [7:0]
RS.H, RS1.H, RS2.H	High byte of the source register, bits[15:8]
RB	Base register for indexed addressing modes, allowed range is R0–R7
RI	Offset register for indexed addressing modes with register offset, allowed range is R0–R7
RI+	Offset register for indexed addressing modes with register offset and post-increment, Allowed range is R0–R7 (R0+ is equivalent to R0)
–RI	Offset register for indexed addressing modes with register offset and pre-decrement, Allowed range is R0–R7 (–R0 is equivalent to R0)

NOTE

Even though register R1 is intended to be used as a pointer to the variable segment, it may be used as a general purpose data register as well.

Selecting R0 as destination register will discard the result of the instruction. Only the condition code register will be updated

6.8.1.2 Inherent Addressing Mode (INH)

Instructions that use this addressing mode either have no operands or all operands are in internal XGATE registers:.

Examples

```
BRK
RTS
```

6.8.1.3 Immediate 3-Bit Wide (IMM3)

Operands for immediate mode instructions are included in the instruction stream and are fetched into the instruction queue along with the rest of the 16 bit instruction. The ’#’ symbol is used to indicate an immediate addressing mode operand. This address mode is used for semaphore instructions.

Examples:

```
CSEM     #1       ; Unlock semaphore 1
SSEM     #3       ; Lock Semaphore 3
```

6.8.1.4 Immediate 4 Bit Wide (IMM4)

The 4 bit wide immediate addressing mode is supported by all shift instructions.

RD = RD ∗ imm4

Examples:

```
LSL     R4,#1    ; R4 = R4 << 1; shift register R4 by 1 bit to the left
LSR     R4,#3    ; R4 = R4 >> 3; shift register R4 by 3 bits to the right
```

6.8.1.5 Immediate 8 Bit Wide (IMM8)

The 8 bit wide immediate addressing mode is supported by four major commands (ADD, SUB, LD, CMP).

RD = RD ∗ imm8

Examples:

```
ADDL    R1,#1    ; adds an 8 bit value to register R1
SUBL    R2,#2    ; subtracts an 8 bit value from register R2
LDH     R3,#3    ; loads an 8 bit immediate into the high byte of Register R3
CMPL    R4,#4    ; compares the low byte of register R4 with an immediate value
```

6.8.1.6 Immediate 16 Bit Wide (IMM16)

The 16 bit wide immediate addressing mode is a construct to simplify assembler code. Instructions which offer this mode are translated into two opcodes using the eight bit wide immediate addressing mode.

RD = RD ∗ imm16

Examples:

```
LDW     R4,#$1234        ; translated to LDL R4,#$34; LDH R4,#$12
ADD     R4,#$5678        ; translated to ADDL R4,#$78; ADDH R4,#$56
```

6.8.1.7 Monadic Addressing (MON)

In this addressing mode only one operand is explicitly given. This operand can either be the source (*f*(RD)), the target (RD = *f*()), or both source and target of the operation (RD = *f*(RD)).

Examples:

```
JAL     R1       ; PC = R1, R1 = PC+2
SIF     R2       ; Trigger IRQ associated with the channel number in R2.L
```

6.8.1.8 Dyadic Addressing (DYA)

In this mode the result of an operation between two registers is stored in one of the registers used as operands.

RD = RD ∗ RS is the general register to register format, with register RD being the first operand and RS the second. RD and RS can be any of the 8 general purpose registers R0 … R7. If R0 is used as the destination register, only the condition code flags are updated. This addressing mode is used only for shift operations with a variable shift value

Examples:

```
LSL     R4,R5    ; R4 = R4 << R5
LSR     R4,R5    ; R4 = R4 >> R5
```

6.8.1.9 Triadic Addressing (TRI)

In this mode the result of an operation between two or three registers is stored into a third one.
RD = RS1 ∗ RS2 is the general format used in the order RD, RS1, RS1. RD, RS1, RS2 can be any of the 8 general purpose registers R0 … R7. If R0 is used as the destination register RD, only the condition code flags are updated. This addressing mode is used for all arithmetic and logical operations.

Examples:

```
ADC     R5,R6,R7          ; R5 = R6 + R7 + Carry
SUB     R5,R6,R7          ; R5 = R6 - R7
```

6.8.1.10 Relative Addressing 9-Bit Wide (REL9)

A 9-bit signed word address offset is included in the instruction word. This addressing mode is used for conditional branch instructions.

Examples:

```
BCC     REL9              ; PC = PC + 2 + (REL9 << 1)
BEQ     REL9              ; PC = PC + 2 + (REL9 << 1)
```

6.8.1.11 Relative Addressing 10-Bit Wide (REL10)

An 11-bit signed word address offset is included in the instruction word. This addressing mode is used for the unconditional branch instruction.

Examples:

```
BRA     REL10             ; PC = PC + 2 + (REL10 << 1)
```

6.8.1.12 Index Register plus Immediate Offset (IDO5)

(RS, #offset5) provides an unsigned offset from the base register.

Examples:

```
LDB     R4,(R1,#offset)   ; loads a byte from R1+offset into R4
STW     R4,(R1,#offset)   ; stores R4 as a word to R1+offset
```

6.8.1.13 Index Register plus Register Offset (IDR)

For load and store instructions (RS, RI) provides a variable offset in a register.

Examples:

```
LDB     R4,(R1,R2)        ; loads a byte from R1+R2 into R4
STW     R4,(R1,R2)        ; stores R4 as a word to R1+R2
```

6.8.1.14 Index Register plus Register Offset with Post-increment (IDR+)

[RS, RI+] provides a variable offset in a register, which is incremented after accessing the memory. In case of a byte access the index register will be incremented by one. In case of a word access it will be incremented by two.

Examples:

```
LDB     R4,(R1,R2+)       ; loads a byte from R1+R2 into R4, R2+=1
STW     R4,(R1,R2+)       ; stores R4 as a word to R1+R2, R2+=2
```

6.8.1.15 Index Register plus Register Offset with Pre-decrement (–IDR)

[RS, -RI] provides a variable offset in a register, which is decremented before accessing the memory. In case of a byte access the index register will be decremented by one. In case of a word access it will be decremented by two.

Examples:

```
LDB     R4,(R1,-R2)       ; R2 -=1, loads a byte from R1+R2 into R4
STW     R4,(R1,-R2)       ; R2 -=2, stores R4 as a word to R1+R2
```

6.8.2 Instruction Summary and Usage

6.8.2.1 Load & Store Instructions

Any register can be loaded either with an immediate or from the address space using indexed addressing modes.

```
LDL     RD,#IMM8          ; loads an immediate 8 bit value to the lower byte of RD
LDW     RD,(RB,RI)        ; loads data using RB+RI as effective address

LDB     RD,(RB, RI+)      ; loads data using RB+RI as effective address
                          ; followed by an increment of RI depending on
                          ; the size of the operation
```

The same set of modes is available for the store instructions

```
STB     RS,(RB, RI)       ; stores data using RB+RI as effective address

STW     RS,(RB, RI+)      ; stores data using RB+RI as effective address
                          ; followed by an increment of RI depending on
                          ; the size of the operation.
```

6.8.2.2 Logic and Arithmetic Instructions

All logic and arithmetic instructions support the 8 bit immediate addressing mode (IMM8: RD = RD ∗ #IMM8) and the triadic addressing mode (TRI: RD = RS1 ∗ RS2).

All arithmetic is considered as signed, sign, overflow, zero and carry flag will be updated. The carry will not be affected for logical operations.

```
ADDL    R2,#1           ; increment R2
ANDH    R4,#$FE         ; R4.H = R4.H & $FE, clear lower bit of higher byte

ADD     R3,R4,R5        ; R3 = R4 + R5
SUB     R3,R4,R5        ; R3 = R4 - R5

AND     R3,R4,R5        ; R3 = R4 & R5 logical AND on the whole word
OR      R3,R4,R5        ; R3 = R4 | R5
```

6.8.2.3 Register – Register Transfers

This group comprises transfers from and to some special registers

```
TFR     R3,CCR          ; transfers the condition code register to the low byte of
                        ; register R3
Branch Instructions
```

The branch offset is +255 words or -256 words counted from the beginning of the next instruction. Since instructions have a fixed 16 bit width, the branch offsets are word aligned by shifting the offset value by 2.

```
BEQ     label           ; if Z flag = 1 branch to label
```

An unconditional branch allows a +511 words or -512 words branch distance.

```
BRA     label
```

6.8.2.4 Shift Instructions

Shift operations allow the use of a 4 bit wide immediate value to identify a shift width within a 16 bit word. For shift operations a value of 0 does not shift at all, while a value of 15 shifts the register RD by 15 bits. In a second form the shift value is contained in the bits 3:0 of the register RS.

Examples:

```
LSL     R4,#1    ; R4 = R4 << 1; shift register R4 by 1 bit to the left
LSR     R4,#3    ; R4 = R4 >> 3; shift register R4 by 3 bits to the right
ASR     R4,R2    ; R4 = R4 >> R2;arithmetic shift register R4 right by the amount
                 ;            of bits contained in R2[3:0].
```

6.8.2.5 Bit Field Operations

This addressing mode is used to identify the position and size of a bit field for insertion or extraction. The width and offset are coded in the lower byte of the source register 2, RS2. The content of the upper byte is ignored. An offset of 0 denotes the right most position and a width of 0 denotes 1 bit. These instructions are very useful to extract, insert, clear, set or toggle portions of a 16 bit word.

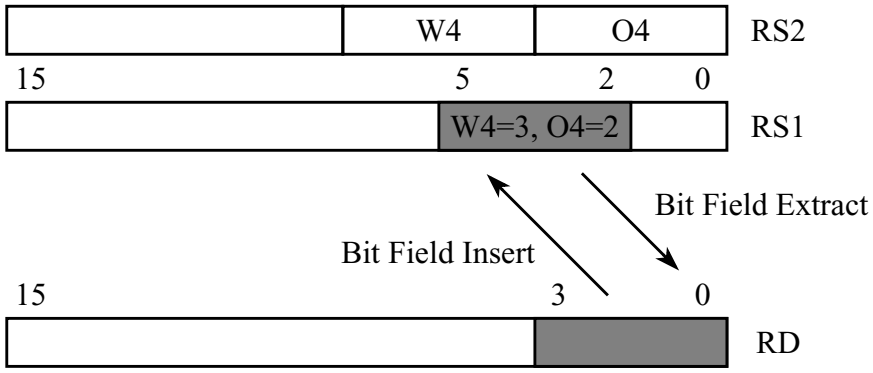

Figure 6-23. Bit Field Addressing

```
BFEXT    R3,R4,R5 ; R5: W4 bits offset O4, will be extracted from R4 into R3
```

6.8.2.6 Special Instructions for DMA Usage

The XGATE offers a number of additional instructions for flag manipulation, program flow control and debugging:

1. SIF: Set a channel interrupt flag
2. SSEM: Test and set a hardware semaphore
3. CSEM: Clear a hardware semaphore
4. BRK: Software breakpoint
5. NOP: No Operation
6. RTS: Terminate the current thread

6.8.3 Cycle Notation

Table 6-16 show the XGATE access detail notation. Each code letter equals one XGATE cycle. Each letter implies additional wait cycles if memories or peripherals are not accessible. Memories or peripherals are not accessible if they are blocked by the S12X_CPU. In addition to this Peripherals are only accessible every other XGATE cycle. Uppercase letters denote 16 bit operations. Lowercase letters denote 8 bit operations. The XGATE is able to perform two bus or wait cycles per S12X_CPU cycle.

Table 6-16. Access Detail Notation

`V` — Vector fetch: always an aligned word read, lasts for at least one RISC core cycle
`P` — Program word fetch: always an aligned word read, lasts for at least one RISC core cycle
`r` — 8 bit data read: lasts for at least one RISC core cycle
`R` — 16 bit data read: lasts for at least one RISC core cycle
`w` — 8 bit data write: lasts for at least one RISC core cycle
`W` — 16 bit data write: lasts for at least one RISC core cycle
`A` — Alignment cycle: no read or write, lasts for zero or one RISC core cycles
`f` — Free cycle: no read or write, lasts for one RISC core cycles
Special Cases
`PP/P` — Branch: `PP` if branch taken, `P` if not

6.8.4 Thread Execution

When the RISC core is triggered by an interrupt request (see Figure 6-1) it first executes a vector fetch sequence which performs three bus accesses:

1. A `V`-cycle to fetch the initial content of the program counter.
2. A `V`-cycle to fetch the initial content of the data segment pointer (R1).
3. A `P`-cycle to load the initial opcode.

Afterwards a sequence of instructions (thread) is executed which is terminated by an "RTS" instruction. If further interrupt requests are pending after a thread has been terminated, a new vector fetch will be performed. Otherwise the RISC core will idle until a new interrupt request is received. A thread can not be interrupted by an interrupt request.

6.8.5 Instruction Glossary

This section describes the XGATE instruction set in alphabetical order.

ADC Add with Carry ADC

Operation

RS1 + RS2 + C ⇒ RD

Adds the content of register RS1, the content of register RS2 and the value of the Carry bit using binary addition and stores the result in the destination register RD. The Zero Flag is also carried forward from the previous operation allowing 32 and more bit additions.

Example:

```
ADC     R6,R2,R2
ADC     R7,R3,R3 ; R7:R6 = R5:R4 + R3:R2
BCC              ; conditional branch on 32 bit addition
```

CCR Effects

N	Z	V	C
Δ	Δ	Δ	Δ

N: Set if bit 15 of the result is set; cleared otherwise.

Z: Set if the result is $0000 and Z was set before this operation; cleared otherwise.

V: Set if a two´s complement overflow resulted from the operation; cleared otherwise.
$RS1[15] \& RS2[15] \& \overline{RD[15]}_{new} \mid \overline{RS1[15]} \& \overline{RS2[15]} \& RD[15]_{new}$

C: Set if there is a carry from bit 15 of the result; cleared otherwise.
$RS1[15] \& RS2[15] \mid RS1[15] \& \overline{RD[15]}_{new} \mid RS2[15] \& \overline{RD[15]}_{new}$

Code and CPU Cycles

Source Form	Address Mode	Machine Code										Cycles
ADC RD, RS1, RS2	TRI	0	0	0	1	1	RD	RS1	RS2	1	1	P

ADD Add without Carry ADD

Operation

RS1 + RS2 ⇒ RD
RD + IMM16 ⇒ RD (translates to ADDL RD, #IMM16[7:0]; ADDH RD, #[15:8])

Performs a 16 bit addition and stores the result in the destination register RD.

CCR Effects

N	Z	V	C
Δ	Δ	Δ	Δ

N: Set if bit 15 of the result is set; cleared otherwise.

Z: Set if the result is $0000; cleared otherwise.

V: Set if a two´s complement overflow resulted from the operation; cleared otherwise.
$RS1[15] \& RS2[15] \& \overline{RD[15]}_{new} \mid \overline{RS1[15]} \& \overline{RS2[15]} \& RD[15]_{new}$
Refer to ADDH instruction for #IMM16 operations.

C: Set if there is a carry from bit 15 of the result; cleared otherwise.
$RS1[15] \& RS2[15] \mid RS1[15] \& \overline{RD[15]}_{new} \mid RS2[15] \& \overline{RD[15]}_{new}$
Refer to ADDH instruction for #IMM16 operations.

Code and CPU Cycles

Source Form	Address Mode	Machine Code										Cycles
ADD RD, RS1, RS2	TRI	0	0	0	1	1	RD	RS1	RS2	1	0	P
ADD RD, #IMM16	IMM8	1	1	1	0	0	RD	IMM16[7:0]				P
	IMM8	1	1	1	0	1	RD	IMM16[15:8]				P

ADDH — Add Immediate 8 bit Constant (High Byte) — ADDH

Operation

RD + IMM8:$00 ⇒ RD

Adds the content of high byte of register RD and a signed immediate 8 bit constant using binary addition and stores the result in the high byte of the destination register RD. This instruction can be used after an ADDL for a 16 bit immediate addition.

Example:

```
ADDL     R2,#LOWBYTE
ADDH     R2,#HIGHBYTE      ; R2 = R2 + 16 bit immediate
```

CCR Effects

N	Z	V	C
Δ	Δ	Δ	Δ

N: Set if bit 15 of the result is set; cleared otherwise.

Z: Set if the result is $0000; cleared otherwise.

V: Set if a two´s complement overflow resulted from the operation; cleared otherwise.
$RD[15]_{old}$ & IMM8[7] & $\overline{RD[15]}_{new}$ | $\overline{RD[15]}_{old}$ & $\overline{IMM8[7]}$ & $RD[15]_{new}$

C: Set if there is a carry from the bit 15 of the result; cleared otherwise.
$RD[15]_{old}$ & IMM8[7] | $RD[15]_{old}$ & $\overline{RD[15]}_{new}$ | IMM8[7] & $\overline{RD[15]}_{new}$

Code and CPU Cycles

Source Form	Address Mode	Machine Code							Cycles
ADDH RD, #IMM8	IMM8	1	1	1	0	1	RD	IMM8	P

ADDL — Add Immediate 8 bit Constant (Low Byte) — ADDL

Operation

RD + $00:IMM8 ⇒ RD

Adds the content of register RD and an unsigned immediate 8 bit constant using binary addition and stores the result in the destination register RD. This instruction must be used first for a 16 bit immediate addition in conjunction with the ADDH instruction.

CCR Effects

N	Z	V	C
Δ	Δ	Δ	Δ

N: Set if bit 15 of the result is set; cleared otherwise.

Z: Set if the result is $0000; cleared otherwise.

V: Set if a two´s complement overflow resulted from the 8 bit operation; cleared otherwise.
$\overline{RD[15]}_{old}$ & $RD[15]_{new}$

C: Set if there is a carry from the bit 15 of the result; cleared otherwise.
$RD[15]_{old}$ & $\overline{RD[15]}_{new}$

Code and CPU Cycles

Source Form	Address Mode	Machine Code							Cycles
ADDL RD, #IMM8	IMM8	1	1	1	0	0	RD	IMM8	P

AND — Logical AND — AND

Operation

RS1 & RS2 ⇒ RD
RD & IMM16 ⇒ RD (translates to ANDL RD, #IMM16[7:0]; ANDH RD, #IMM16[15:8])

Performs a bit wise logical AND of two 16 bit values and stores the result in the destination register RD.

Remark: There is no complement to the BITH and BITL functions. This can be imitated by using R0 as a destination register. AND R0, RS1, RS2 performs a bit wise test without storing a result.

CCR Effects

N	Z	V	C
Δ	Δ	0	—

N: Set if bit 15 of the result is set; cleared otherwise.
Z: Set if the result is $0000; cleared otherwise.
Refer to ANDH instruction for #IMM16 operations.
V: 0; cleared.
C: Not affected.

Code and CPU Cycles

Source Form	Address Mode	Machine Code										Cycles
AND RD, RS1, RS2	TRI	0	0	0	1	0	RD	RS1	RS2	0	0	P
AND RD, #IMM16	IMM8	1	0	0	0	0	RD	IMM16[7:0]				P
	IMM8	1	0	0	0	1	RD	IMM16[15:8]				P

ANDH Logical AND Immediate 8 bit Constant (High Byte) ANDH

Operation

RD.H & IMM8 ⇒ RD.H

Performs a bit wise logical AND between the high byte of register RD and an immediate 8 bit constant and stores the result in the destination register RD.H. The low byte of RD is not affected.

CCR Effects

N	Z	V	C
Δ	Δ	0	—

N: Set if bit 15 of the result is set; cleared otherwise.
Z: Set if the 8 bit result is $00; cleared otherwise.
V: 0; cleared.
C: Not affected.

Code and CPU Cycles

Source Form	Address Mode	Machine Code							Cycles
ANDH RD, #IMM8	IMM8	1	0	0	0	1	RD	IMM8	P

ANDL Logical AND Immediate 8 bit Constant (Low Byte) ANDL

Operation

RD.L & IMM8 ⇒ RD.L

Performs a bit wise logical AND between the low byte of register RD and an immediate 8 bit constant and stores the result in the destination register RD.L. The high byte of RD is not affected.

CCR Effects

N	Z	V	C
Δ	Δ	0	—

N: Set if bit 7 of the result is set; cleared otherwise.
Z: Set if the 8 bit result is $00; cleared otherwise.
V: 0; cleared.
C: Not affected.

Code and CPU Cycles

Source Form	Address Mode	Machine Code							Cycles
ANDL RD, #IMM8	IMM8	1	0	0	0	0	RD	IMM8	P

ASR Arithmetic Shift Right ASR

Operation

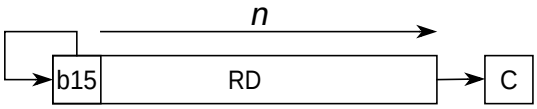

n = RS or IMM4

Shifts the bits in register RD *n* positions to the right. The higher *n* bits of the register RD become filled with the sign bit (RD[15]). The carry flag will be updated to the bit contained in RD[n-1] before the shift for *n* > 0.

n can range from 0 to 16.

In immediate address mode, *n* is determined by the operand IMM4. *n* is considered to be 16 in IMM4 is equal to 0.

In dyadic address mode, *n* is determined by the content of RS. *n* is considered to be 16 if the content of RS is greater than 15.

CCR Effects

N	Z	V	C
Δ	Δ	0	Δ

N: Set if bit 15 of the result is set; cleared otherwise.

Z: Set if the result is $0000; cleared otherwise.

V: Set if a two´s complement overflow resulted from the operation; cleared otherwise.
$RD[15]_{old}$ ^ $RD[15]_{new}$

C: Set if *n* > 0 and RD[n-1] = 1; if n = 0 unaffected.

Code and CPU Cycles

Source Form	Address Mode	Machine Code											Cycles
ASR RD, #IMM4	IMM4	0	0	0	0	1	RD	IMM4		1	0	0	1	P
ASR RD, RS	DYA	0	0	0	0	1	RD	RS	1	0	0	0	1	P

BCC — Branch if Carry Cleared (Same as BHS) — BCC

Operation

If C = 0, then PC + $0002 + (REL9 << 1) ⇒ PC

Tests the Carry flag and branches if C = 0.

CCR Effects

N	Z	V	C
—	—	—	—

N: Not affected.
Z: Not affected.
V: Not affected.
C: Not affected.

Code and CPU Cycles

Source Form	Address Mode	Machine Code								Cycles
BCC REL9	REL9	0	0	1	0	0	0	0	REL9	PP/P

BCS

Branch if Carry Set (Same as BLO)

BCS

Operation

If C = 1, then PC + $0002 + (REL9 << 1) ⇒ PC

Tests the Carry flag and branches if C = 1.

CCR Effects

N	Z	V	C
—	—	—	—

N: Not affected.
Z: Not affected.
V: Not affected.
C: Not affected.

Code and CPU Cycles

Source Form	Address Mode	Machine Code								Cycles
BCS REL9	REL9	0	0	1	0	0	0	1	REL9	PP/P

BEQ Branch if Equal BEQ

Operation

If Z = 1, then PC + $0002 + (REL9 << 1) ⇒ PC

Tests the Zero flag and branches if Z = 1.

CCR Effects

N	Z	V	C
—	—	—	—

N: Not affected.
Z: Not affected.
V: Not affected.
C: Not affected.

Code and CPU Cycles

Source Form	Address Mode	Machine Code								Cycles
BEQ REL9	REL9	0	0	1	0	0	1	1	REL9	PP/P

BFEXT Bit Field Extract BFEXT

Operation

RS1[(*o*+*w*):*o*] ⇒ RD[*w*:0]; 0 ⇒ RD[15:(*w*+1)]

w = (RS2[7:4])

o = (RS2[3:0])

Extracts *w+1* bits from register RS1 starting at position *o* and writes them right aligned into register RD. The remaining bits in RD will be cleared. If (o+w) > 15 only bits [15:o] get extracted.

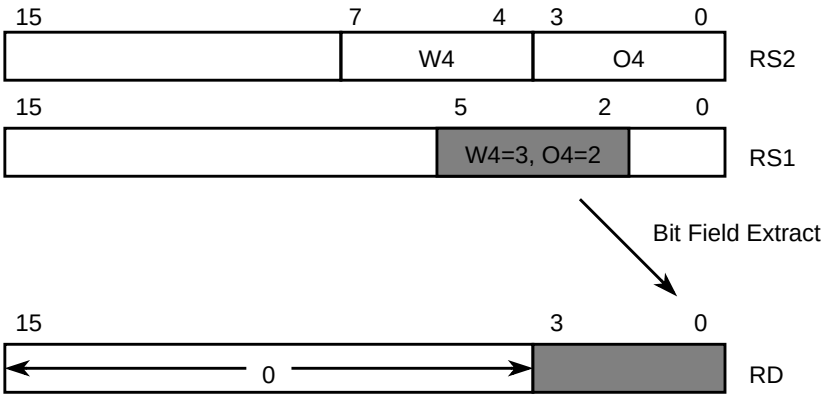

CCR Effects

N	Z	V	C
0	Δ	0	Δ

N: Set if bit 15 of the result is set; cleared otherwise.

Z: Set if the result is $0000; cleared otherwise.

V: 0; cleared.

C: Not affected.

Code and CPU Cycles

Source Form	Address Mode	Machine Code										Cycles
BFEXT RD, RS1, RS2	TRI	0	1	1	0	0	RD	RS1	RS2	1	1	P

BFFO Bit Field Find First One BFFO

Operation

FirstOne (RS) ⇒ RD;

Searches the first “1” in register RS (from MSB to LSB) and writes the bit position into the destination register RD. The upper bits of RD are cleared. In case the content of RS is equal to $0000, RD will be cleared and the carry flag will be set. This is used to distinguish a “1” in position 0 versus no “1” in the whole RS register at all.

CCR Effects

N	Z	V	C
0	Δ	0	Δ

N: 0; cleared.
Z: Set if the result is $0000; cleared otherwise.
V: 0; cleared.
C: Set if RS = $0000[1]; cleared otherwise.

[1] Before executing the instruction

Code and CPU Cycles

Source Form	Address Mode	Machine Code												Cycles
BFFO RD, RS	DYA	0	0	0	0	1	RD	RS	1	0	0	0	0	P

BFINS Bit Field Insert BFINS

Operation

RS1[*w*:*0*] ⇒ RD[(*w*+*o*):o];

w = (RS2[7:4])

o = (RS2[3:0])

Extracts *w+1* bits from register RS1 starting at position 0 and writes them into register RD starting at position *o*. The remaining bits in RD are not affected. If (o+w) > 15 the upper bits are ignored. Using R0 as a RS1, this command can be used to clear bits.

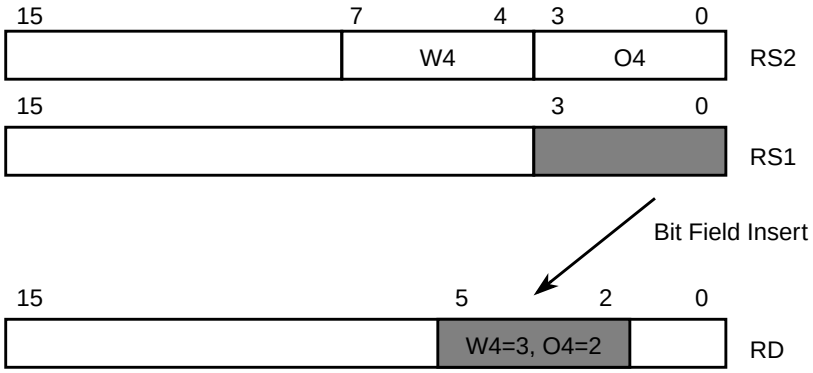

CCR Effects

N	Z	V	C
Δ	Δ	0	—

N: Set if bit 15 of the result is set; cleared otherwise.
Z: Set if the result is $0000; cleared otherwise.
V: 0; cleared.
C: Not affected.

Code and CPU Cycles

Source Form	Address Mode	Machine Code										Cycles
BFINS RD, RS1, RS2	TRI	0	1	1	0	1	RD	RS1	RS2	1	1	P

BFINSI Bit Field Insert and Invert BFINSI

Operation

!RS1[*w*:*0*] ⇒ RD[*w*+o:o];

w = (RS2[7:4])

o = (RS2[3:0])

Extracts *w+1* bits from register RS1 starting at position 0, inverts them and writes into register RD starting at position *o*. The remaining bits in RD are not affected. If (o+w) > 15 the upper bits are ignored. Using R0 as a RS1, this command can be used to set bits.

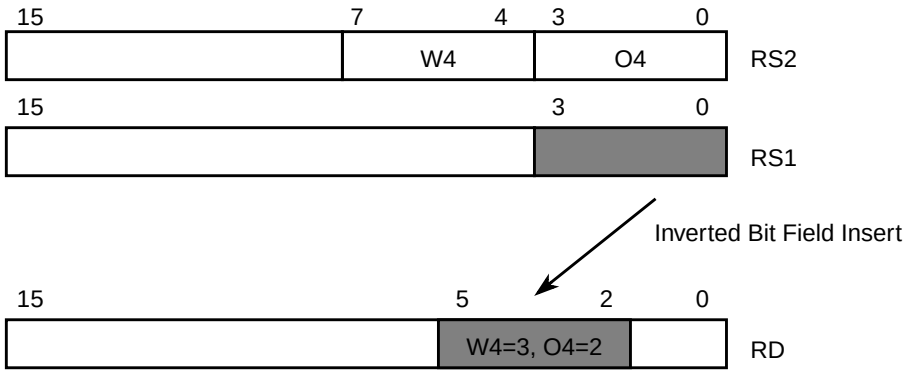

CCR Effects

N	Z	V	C
Δ	Δ	0	—

N: Set if bit 15 of the result is set; cleared otherwise.

Z: Set if the result is $0000; cleared otherwise.

V: 0; cleared.

C: Not affected.

Code and CPU Cycles

Source Form	Address Mode	Machine Code										Cycles
BFINSI RD, RS1, RS2	TRI	0	1	1	1	0	RD	RS1	RS2	1	1	P

BFINSX Bit Field Insert and XNOR BFINSX

Operation

!(RS1[*w*:*0*] ^ RD[w+o:o]) ⇒ RD[*w*+o:o];

w = (RS2[7:4])

o = (RS2[3:0])

Extracts *w+1* bits from register RS1 starting at position 0, performs an XNOR with RD[w+o:o] and writes the bits back io RD. The remaining bits in RD are not affected. If (o+w) > 15 the upper bits are ignored. Using R0 as a RS1, this command can be used to toggle bits.

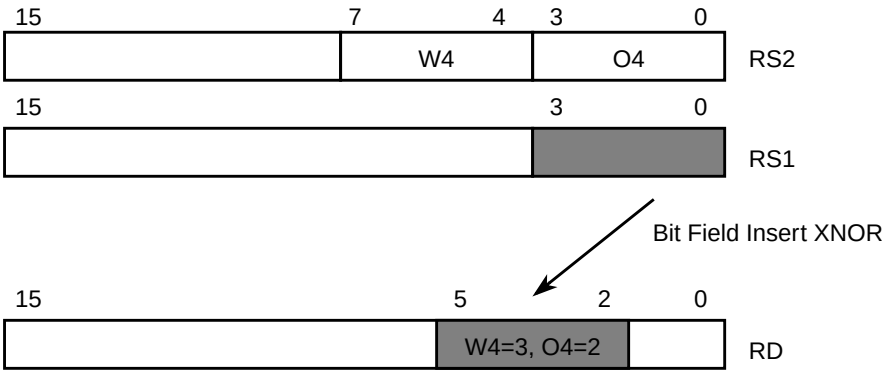

CCR Effects

N	Z	V	C
Δ	Δ	0	—

N: Set if bit 15 of the result is set; cleared otherwise.

Z: Set if the result is $0000; cleared otherwise.

V: 0; cleared.

C: Not affected.

Code and CPU Cycles

Source Form	Address Mode	Machine Code										Cycles
BFINSX RD, RS1, RS2	TRI	0	1	1	1	1	RD	RS1	RS2	1	1	P

BGE Branch if Greater than or Equal to Zero BGE

Operation

If N ^ V = 0, then PC + $0002 + (REL9 << 1) ⇒ PC

Branch instruction to compare signed numbers.

Branch if RS1 ≥ RS2:

```
SUB     R0,RS1,RS2
BGE     REL9
```

CCR Effects

N	Z	V	C
—	—	—	—

N: Not affected.
Z: Not affected.
V: Not affected.
C: Not affected.

Code and CPU Cycles

Source Form	Address Mode	Machine Code								Cycles
BGE REL9	REL9	0	0	1	1	0	1	0	REL9	PP/P

BGT Branch if Greater than Zero BGT

Operation

If Z | (N ^ V) = 0, then PC + $0002 + (REL9 << 1) ⇒ PC

Branch instruction to compare signed numbers.

Branch if RS1 > RS2:

```
SUB     R0,RS1,RS2
BGE     REL9
```

CCR Effects

N	Z	V	C
—	—	—	—

N: Not affected.
Z: Not affected.
V: Not affected.
C: Not affected.

Code and CPU Cycles

Source Form	Address Mode	Machine Code								Cycles
BGT REL9	REL9	0	0	1	1	1	0	0	REL9	PP/P

BHI Branch if Higher BHI

Operation

If C | Z = 0, then PC + $0002 + (REL9 << 1) ⇒ PC

Branch instruction to compare unsigned numbers.

Branch if RS1 > RS2:

```
SUB     R0,RS1,RS2
BHI     REL9
```

CCR Effects

N	Z	V	C
—	—	—	—

N: Not affected.
Z: Not affected.
V: Not affected.
C: Not affected.

Code and CPU Cycles

Source Form	Address Mode	Machine Code								Cycles
BHI REL9	REL9	0	0	1	1	0	0	0	REL9	PP/P

BHS — Branch if Higher or Same (Same as BCC) — BHS

Operation

If C = 0, then PC + $0002 + (REL9 << 1) ⇒ PC

Branch instruction to compare unsigned numbers.

Branch if RS1 ≥ RS2:

```
SUB     R0,RS1,RS2
BHS     REL9
```

CCR Effects

N	Z	V	C
—	—	—	—

N: Not affected.
Z: Not affected.
V: Not affected.
C: Not affected.

Code and CPU Cycles

Source Form	Address Mode	Machine Code								Cycles
BHS REL9	REL9	0	0	1	0	0	0	0	REL9	PP/P

BITH — Bit Test Immediate 8 bit Constant (High Byte) — BITH

Operation

RD.H & IMM8 ⇒ NONE

Performs a bit wise logical AND between the high byte of register RD and an immediate 8 bit constant. Only the condition code flags get updated, but no result is written back

CCR Effects

N	Z	V	C
Δ	Δ	0	—

N: Set if bit 15 of the result is set; cleared otherwise.
Z: Set if the 8 bit result is $00; cleared otherwise.
V: 0; cleared.
C: Not affected.

Code and CPU Cycles

Source Form	Address Mode	Machine Code							Cycles
BITH RD, #IMM8	IMM8	1	0	0	1	1	RD	IMM8	P

BITL — Bit Test Immediate 8 bit Constant (Low Byte) — BITL

Operation

RD.L & IMM8 ⇒ NONE

Performs a bit wise logical AND between the low byte of register RD and an immediate 8 bit constant. Only the condition code flags get updated, but no result is written back.

CCR Effects

N	Z	V	C
Δ	Δ	0	—

N: Set if bit 7 of the result is set; cleared otherwise.
Z: Set if the 8 bit result is $00; cleared otherwise.
V: 0; cleared.
C: Not affected.

Code and CPU Cycles

Source Form	Address Mode	Machine Code							Cycles
BITL RD, #IMM8	IMM8	1	0	0	1	0	RD	IMM8	P

BLE Branch if Less or Equal to Zero BLE

Operation

If Z | (N ^ V) = 1, then PC + $0002 + (REL9 << 1) ⇒ PC

Branch instruction to compare signed numbers.

Branch if RS1 ≤ RS2:

```
SUB     R0,RS1,RS2
BLE     REL9
```

CCR Effects

N	Z	V	C
—	—	—	—

N: Not affected.
Z: Not affected.
V: Not affected.
C: Not affected.

Code and CPU Cycles

Source Form	Address Mode	Machine Code								Cycles
BLE REL9	REL9	0	0	1	1	1	0	1	REL9	PP/P

BLO — Branch if Carry Set (Same as BCS) — BLO

Operation

If C = 1, then PC + $0002 + (REL9 << 1) ⇒ PC

Branch instruction to compare unsigned numbers.

Branch if RS1 < RS2:

```
SUB     R0,RS1,RS2
BLO     REL9
```

CCR Effects

N	Z	V	C
—	—	—	—

N: Not affected.
Z: Not affected.
V: Not affected.
C: Not affected.

Code and CPU Cycles

Source Form	Address Mode	Machine Code								Cycles
BLO REL9	REL9	0	0	1	0	0	0	1	REL9	PP/P

BLS — Branch if Lower or Same — BLS

Operation

If C | Z = 1, then PC + $0002 + (REL9 << 1) ⇒ PC

Branch instruction to compare unsigned numbers.

Branch if RS1 ≤ RS2:

```
SUB     R0,RS1,RS2
BLS     REL9
```

CCR Effects

N	Z	V	C
—	—	—	—

N: Not affected.
Z: Not affected.
V: Not affected.
C: Not affected.

Code and CPU Cycles

Source Form	Address Mode	Machine Code								Cycles
BLS REL9	REL9	0	0	1	1	0	0	1	REL9	PP/P

BLT Branch if Lower than Zero BLT

Operation

If N ^ V = 1, then PC + $0002 + (REL9 << 1) ⇒ PC

Branch instruction to compare signed numbers.

Branch if RS1 < RS2:

```
SUB     R0,RS1,RS2
BLT     REL9
```

CCR Effects

N	Z	V	C
—	—	—	—

N: Not affected.
Z: Not affected.
V: Not affected.
C: Not affected.

Code and CPU Cycles

Source Form	Address Mode	Machine Code								Cycles
BLT REL9	REL9	0	0	1	1	0	1	1	REL9	PP/P

BMI Branch if Minus BMI

Operation

If N = 1, then PC + $0002 + (REL9 << 1) ⇒ PC

Tests the Sign flag and branches if N = 1.

CCR Effects

N	Z	V	C
—	—	—	—

N: Not affected.
Z: Not affected.
V: Not affected.
C: Not affected.

Code and CPU Cycles

Source Form	Address Mode	Machine Code								Cycles
BMI REL9	REL9	0	0	1	0	1	0	1	REL9	PP/P

BNE Branch if Not Equal BNE

Operation

If Z = 0, then PC + $0002 + (REL9 << 1) ⇒ PC

Tests the Zero flag and branches if Z = 0.

CCR Effects

N	Z	V	C
—	—	—	—

N: Not affected.
Z: Not affected.
V: Not affected.
C: Not affected.

Code and CPU Cycles

Source Form	Address Mode	Machine Code								Cycles
BNE REL9	REL9	0	0	1	0	0	1	0	REL9	PP/P

BPL Branch if Plus BPL

Operation

If N = 0, then PC + $0002 + (REL9 << 1) ⇒ PC

Tests the Sign flag and branches if N = 0.

CCR Effects

N	Z	V	C
—	—	—	—

N: Not affected.
Z: Not affected.
V: Not affected.
C: Not affected.

Code and CPU Cycles

Source Form	Address Mode	Machine Code								Cycles
BPL REL9	REL9	0	0	1	0	1	0	0	REL9	PP/P

BRA Branch Always BRA

Operation

PC + $0002 + (REL10 << 1) ⇒ PC

Branches always

CCR Effects

N	Z	V	C
—	—	—	—

N: Not affected.
Z: Not affected.
V: Not affected.
C: Not affected.

Code and CPU Cycles

Source Form	Address Mode	Machine Code							Cycles
BRA REL10	REL10	0	0	1	1	1	1	REL10	PP

BRK Break BRK

Operation

Put XGATE into Debug Mode (see Section 6.6.2, “Entering Debug Mode”)and signals a Software breakpoint to the S12X_DBG module (see section 4.9 of the **S12X_DBG Section**).

NOTE

It is not possible to single step over a BRK instruction. This instruction does not advance the program counter.

CCR Effects

N	Z	V	C
—	—	—	—

N: Not affected.
Z: Not affected.
V: Not affected.
C: Not affected.

Code and CPU Cycles

Source Form	Address Mode	Machine Code																Cycles
BRK	INH	0	0	0	0	0	0	0	0	0	0	0	0	0	0	0	0	PAff

BVC Branch if Overflow Cleared BVC

Operation

If V = 0, then PC + $0002 + (REL9 << 1) ⇒ PC

Tests the Overflow flag and branches if V = 0.

CCR Effects

N	Z	V	C
—	—	—	—

N: Not affected.
Z: Not affected.
V: Not affected.
C: Not affected.

Code and CPU Cycles

Source Form	Address Mode	Machine Code								Cycles
BVC REL9	REL9	0	0	1	0	1	1	0	REL9	PP/P

BVS Branch if Overflow Set BVS

Operation

If V = 1, then PC + $0002 + (REL9 << 1) ⇒ PC

Tests the Overflow flag and branches if V = 1.

CCR Effects

N	Z	V	C
—	—	—	—

N: Not affected.
Z: Not affected.
V: Not affected.
C: Not affected.

Code and CPU Cycles

Source Form	Address Mode	Machine Code								Cycles
BVS REL9	REL9	0	0	1	0	1	1	1	REL9	PP/P

CMP Compare CMP

Operation

RS2 – RS1 ⇒ NONE (translates to SUB R0, RS1, RS2)
RD – IMM16 ⇒ NONE (translates to CMPL RD, #IMM16[7:0]; CPCH RD, #IMM16[15:8])

Subtracts two 16 bit values and discards the result.

CCR Effects

N	Z	V	C
Δ	Δ	Δ	Δ

N: Set if bit 15 of the result is set; cleared otherwise.

Z: Set if the result is $0000; cleared otherwise.

V: Set if a two´s complement overflow resulted from the operation; cleared otherwise.
RS1[15] & $\overline{\text{RS2[15]}}$ & $\overline{\text{result[15]}}$ | $\overline{\text{RS1[15]}}$ & RS2[15] & result[15]
RD[15] & $\overline{\text{IMM16[15]}}$ & $\overline{\text{result[15]}}$ | $\overline{\text{RD[15]}}$ & IMM16[15] & result[15]

C: Set if there is a carry from the bit 15 of the result; cleared otherwise.
$\overline{\text{RS1[15]}}$ & RS2[15] | $\overline{\text{RS1[15]}}$ & result[15] | RS2[15] & result[15]
$\overline{\text{RD[15]}}$ & IMM16[15] | $\overline{\text{RD[15]}}$ & result[15] | IMM16[15] & result[15]

Code and CPU Cycles

Source Form	Address Mode	Machine Code											Cycles
CMP RS1, RS2	TRI	0	0	0	1	1	0	0	0	RS1	RS2	0	0	P
CMP RS, #IMM16	IMM8	1	1	0	1	0	RS			IMM16[7:0]				P
	IMM8	1	1	0	1	1	RS			IMM16[15:8]				P

CMPL — Compare Immediate 8 bit Constant (Low Byte) — CMPL

Operation

RS.L – IMM8 ⇒ NONE, only condition code flags get updated

Subtracts the 8 bit constant IMM8 contained in the instruction code from the low byte of the source register RS.L using binary subtraction and updates the condition code register accordingly.

Remark: There is no equivalent operation using triadic addressing. Comparing the values of two registers can be performed by using the subtract instruction with R0 as destination register.

CCR Effects

N	Z	V	C
Δ	Δ	Δ	Δ

N: Set if bit 7 of the result is set; cleared otherwise.

Z: Set if the 8 bit result is $00; cleared otherwise.

V: Set if a two´s complement overflow resulted from the 8 bit operation; cleared otherwise.
$RS[7] \& \overline{IMM8[7]} \& \overline{result[7]} \mid \overline{RS[7]} \& IMM8[7] \& result[7]$

C: Set if there is a carry from the Bit 7 to Bit 8 of the result; cleared otherwise.
$\overline{RS[7]} \& IMM8[7] \mid \overline{RS[7]} \& result[7] \mid IMM8[7] \& result[7]$

Code and CPU Cycles

Source Form	Address Mode	Machine Code							Cycles
CMPL RS, #IMM8	IMM8	1	1	0	1	0	RS	IMM8	P

COM One's Complement COM

Operation

~RS ⇒ RD (translates to XNOR RD, R0, RS)
~RD ⇒ RD (translates to XNOR RD, R0, RD)

Performs a one's complement on a general purpose register.

CCR Effects

N	Z	V	C
Δ	Δ	0	—

N: Set if bit 15 of the result is set; cleared otherwise.
Z: Set if the result is $0000; cleared otherwise.
V: 0; cleared.
C: Not affected.

Code and CPU Cycles

Source Form	Address Mode	Machine Code												Cycles
COM RD, RS	TRI	0	0	0	1	0	RD	0	0	0	RS	1	1	P
COM RD	TRI	0	0	0	1	0	RD	0	0	0	RD	1	1	P

CPC Compare with Carry CPC

Operation

RS2 – RS1 - C ⇒ NONE (translates to SBC R0, RS1, RS2)

Subtracts the carry bit and the content of register RS2 from the content of register RS1 using binary subtraction and discards the result.

CCR Effects

N	Z	V	C
Δ	Δ	Δ	Δ

N: Set if bit 15 of the result is set; cleared otherwise.

Z: Set if the result is $0000; cleared otherwise.

V: Set if a two´s complement overflow resulted from the operation; cleared otherwise.
RS1[15] & $\overline{\text{RS2[15]}}$ & $\overline{\text{result[15]}}$ | $\overline{\text{RS1[15]}}$ & RS2[15] & result[15]

C: Set if there is a carry from the bit 15 of the result; cleared otherwise.
$\overline{\text{RS1[15]}}$ & RS2[15] | $\overline{\text{RS1[15]}}$ & result[15] | RS2[15] & result[15]

Code and CPU Cycles

Source Form	Address Mode	Machine Code												Cycles
CPC RS1, RS2	TRI	0	0	0	1	1	0	0	0	RS1	RS2	0	1	P

CPCH Compare Immediate 8 bit Constant with Carry (High Byte) CPCH

Operation

RS.H - IMM8 - C ⇒ NONE, only condition code flags get updated

Subtracts the carry bit and the 8 bit constant IMM8 contained in the instruction code from the high byte of the source register RD using binary subtraction and updates the condition code register accordingly. The carry bit and Zero bits are taken into account to allow a 16 bit compare in the form of

```
CMPL    R2,#LOWBYTE
CPCH    R2,#HIGHBYTE
BCC                         ; branch condition
```

Remark: There is no equivalent operation using triadic addressing. Comparing the values of two registers can be performed by using the subtract instruction with R0 as destination register.

CCR Effects

N	Z	V	C
Δ	Δ	Δ	Δ

N: Set if bit 15 of the result is set; cleared otherwise.

Z: Set if the result is $00 and Z was set before this operation; cleared otherwise.

V: Set if a two´s complement overflow resulted from the operation; cleared otherwise.
RS[15] & $\overline{\text{IMM8[7]}}$ & $\overline{\text{result[15]}}$ | $\overline{\text{RS[15]}}$ & IMM8[7] & result[15]

C: Set if there is a carry from the bit 15 of the result; cleared otherwise.
$\overline{\text{RS[15]}}$ & IMM8[7] | $\overline{\text{RS[15]}}$ & result[15] | IMM8[7] & result[15]

Code and CPU Cycles

Source Form	Address Mode	Machine Code							Cycles
CPCH RD, #IMM8	IMM8	1	1	0	1	1	RS	IMM8	P

CSEM Clear Semaphore CSEM

Operation

Unlocks a semaphore that was locked by the RISC core.

In monadic address mode, bits RS[2:0] select the semaphore to be cleared.

CCR Effects

N	Z	V	C
—	—	—	—

N: Not affected.
Z: Not affected.
V: Not affected.
C: Not affected.

Code and CPU Cycles

Source Form	Address Mode	Machine Code														Cycles
CSEM #IMM3	IMM3	0	0	0	0	0	IMM3	1	1	1	1	0	0	0	0	PA
CSEM RS	MON	0	0	0	0	0	RS	1	1	1	1	0	0	0	1	PA

CSL Logical Shift Left with Carry CSL

Operation

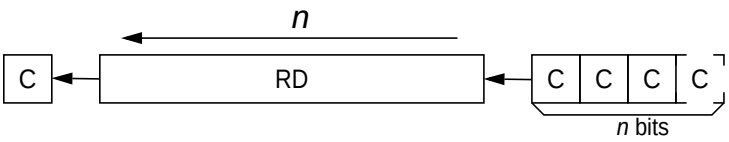

n = RS or IMM4

Shifts the bits in register RD *n* positions to the left. The lower *n* bits of the register RD become filled with the carry flag. The carry flag will be updated to the bit contained in RD[16-n] before the shift for *n* > 0. *n* can range from 0 to 16.

In immediate address mode, *n* is determined by the operand IMM4. *n* is considered to be 16 in IMM4 is equal to 0.

In dyadic address mode, *n* is determined by the content of RS. *n* is considered to be 16 if the content of RS is greater than 15.

CCR Effects

N	Z	V	C
Δ	Δ	Δ	Δ

N: Set if bit 15 of the result is set; cleared otherwise.

Z: Set if the result is $0000; cleared otherwise.

V: Set if a two´s complement overflow resulted from the operation; cleared otherwise.
$RD[15]_{old}$ ^ $RD[15]_{new}$

C: Set if *n* > 0 and RD[16-n] = 1; if n = 0 unaffected.

Code and CPU Cycles

Source Form	Address Mode	Machine Code											Cycles
CSL RD, #IMM4	IMM4	0	0	0	0	1	RD	IMM4		1	0	1	0	P
CSL RD, RS	DYA	0	0	0	0	1	RD	RS	1	0	0	1	0	P

CSR Logical Shift Right with Carry CSR

Operation

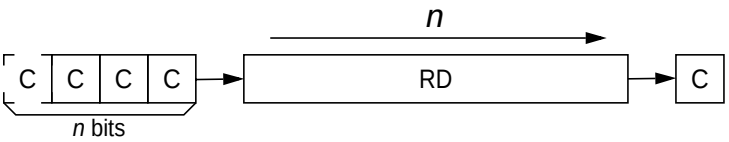

n = RS or IMM4

Shifts the bits in register RD *n* positions to the right. The higher *n* bits of the register RD become filled with the carry flag. The carry flag will be updated to the bit contained in RD[n-1] before the shift for *n* > 0. *n* can range from 0 to 16.

In immediate address mode, *n* is determined by the operand IMM4. *n* is considered to be 16 in IMM4 is equal to 0.

In dyadic address mode, *n* is determined by the content of RS. *n* is considered to be 16 if the content of RS is greater than 15.

CCR Effects

N	Z	V	C
Δ	Δ	Δ	Δ

N: Set if bit 15 of the result is set; cleared otherwise.

Z: Set if the result is $0000; cleared otherwise.

V: Set if a two´s complement overflow resulted from the operation; cleared otherwise.
$RD[15]_{old}$ ^ $RD[15]_{new}$

C: Set if *n* > 0 and RD[n-1] = 1; if n = 0 unaffected.

Code and CPU Cycles

Source Form	Address Mode	Machine Code												Cycles
CSR RD, #IMM4	IMM4	0	0	0	0	1	RD	IMM4		1	0	1	1	P
CSR RD, RS	DYA	0	0	0	0	1	RD	RS	1	0	0	1	1	P

JAL Jump and Link JAL

Operation

PC + $0002 ⇒ RD; RD ⇒ PC

Jumps to the address stored in RD and saves the return address in RD.

CCR Effects

N	Z	V	C
—	—	—	—

N: Not affected.
Z: Not affected.
V: Not affected.
C: Not affected.

Code and CPU Cycles

Source Form	Address Mode	Machine Code														Cycles
JAL RD	MON	0	0	0	0	0	RD	1	1	1	1	0	1	1	0	PP

LDB — Load Byte from Memory (Low Byte) — LDB

Operation

M[RB, #OFFS5 ⇒ RD.L; $00 ⇒ RD.H
M[RB, RI] ⇒ RD.L; $00 ⇒ RD.H
M[RB, RI] ⇒ RD.L; $00 ⇒ RD.H; RI+1 ⇒ RI;[1]
RI-1 ⇒ RI; M[RS, RI] ⇒ RD.L; $00 ⇒ RD.H

Loads a byte from memory into the low byte of register RD. The high byte is cleared.

CCR Effects

N	Z	V	C
—	—	—	—

N: Not affected.
Z: Not affected.
V: Not affected.
C: Not affected.

Code and CPU Cycles

Source Form	Address Mode	Machine Code										Cycles
LDB RD, (RB, #OFFS5)	IDO5	0	1	0	0	0	RD	RB	OFFS5			Pr
LDB RD, (RS, RI)	IDR	0	1	1	0	0	RD	RB	RI	0	0	Pr
LDB RD, (RS, RI+)	IDR+	0	1	1	0	0	RD	RB	RI	0	1	Pr
LDB RD, (RS, -RI)	-IDR	0	1	1	0	0	RD	RB	RI	1	0	Pr

1. If the same general purpose register is used as index (RI) and destination register (RD), the content of the register will not be incremented after the data move: M[RB, RI] ⇒ RD.L; $00 ⇒ RD.H

LDH — Load Immediate 8 bit Constant (High Byte) — LDH

Operation

IMM8 ⇒ RD.H;

Loads an eight bit immediate constant into the high byte of register RD. The low byte is not affected.

CCR Effects

N	Z	V	C
—	—	—	—

N: Not affected.
Z: Not affected.
V: Not affected.
C: Not affected.

Code and CPU Cycles

Source Form	Address Mode	Machine Code							Cycles
LDH RD, #IMM8	IMM8	1	1	1	1	1	RD	IMM8	P

LDL — Load Immediate 8 bit Constant (Low Byte) — LDL

Operation

IMM8 ⇒ RD.L; $00 ⇒ RD.H

Loads an eight bit immediate constant into the low byte of register RD. The high byte is cleared.

CCR Effects

N	Z	V	C
—	—	—	—

N: Not affected.
Z: Not affected.
V: Not affected.
C: Not affected.

Code and CPU Cycles

Source Form	Address Mode	Machine Code							Cycles
LDL RD, #IMM8	IMM8	1	1	1	1	0	RD	IMM8	P

LDW Load Word from Memory LDW

Operation

M[RB, #OFFS5] ⇒ RD
M[RB, RI] ⇒ RD
M[RB, RI] ⇒ RD; RI+2 ⇒ RI[1]
RI-2 ⇒ RI; M[RS, RI] ⇒ RD
IMM16 ⇒ RD (translates to LDL RD, #IMM16[7:0]; LDH RD, #IMM16[15:8])

Loads a 16 bit value into the register RD.

CCR Effects

N	Z	V	C
—	—	—	—

N: Not affected.
Z: Not affected.
V: Not affected.
C: Not affected.

Code and CPU Cycles

Source Form	Address Mode	Machine Code										Cycles
LDW RD, (RB, #OFFS5)	IDO5	0	1	0	0	1	RD	RB	OFFS5			PR
LDW RD, (RB, RI)	IDR	0	1	1	0	1	RD	RB	RI	0	0	PR
LDW RD, (RB, RI+)	IDR+	0	1	1	0	1	RD	RB	RI	0	1	PR
LDW RD, (RB, -RI)	-IDR	0	1	1	0	1	RD	RB	RI	1	0	PR
LDW RD, #IMM16	IMM8	1	1	1	1	0	RD	IMM16[7:0]				P
	IMM8	1	1	1	1	1	RD	IMM16[15:8]				P

1. If the same general purpose register is used as index (RI) and destination register (RD), the content of the register will not be incremented after the data move: M[RB, RI] ⇒ RD

LSL Logical Shift Left LSL

Operation

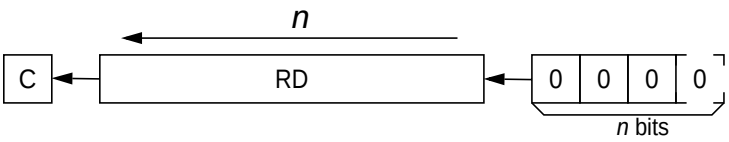

n = RS or IMM4

Shifts the bits in register RD *n* positions to the left. The lower *n* bits of the register RD become filled with zeros. The carry flag will be updated to the bit contained in RD[16-n] before the shift for *n* > 0.

n can range from 0 to 16.

In immediate address mode, *n* is determined by the operand IMM4. *n* is considered to be 16 in IMM4 is equal to 0.

In dyadic address mode, *n* is determined by the content of RS. *n* is considered to be 16 if the content of RS is greater than 15.

CCR Effects

N	Z	V	C
Δ	Δ	Δ	Δ

N: Set if bit 15 of the result is set; cleared otherwise.

Z: Set if the result is $0000; cleared otherwise.

V: Set if a two´s complement overflow resulted from the operation; cleared otherwise.
$RD[15]_{old}$ ^ $RD[15]_{new}$

C: Set if *n* > 0 and RD[16-n] = 1; if n = 0 unaffected.

Code and CPU Cycles

Source Form	Address Mode	Machine Code											Cycles
LSL RD, #IMM4	IMM4	0	0	0	0	1	RD	IMM4		1	1	0	0	P
LSL RD, RS	DYA	0	0	0	0	1	RD	RS	1	0	1	0	0	P

LSR Logical Shift Right LSR

Operation

n = RS or IMM4

Shifts the bits in register RD *n* positions to the right. The higher *n* bits of the register RD become filled with zeros. The carry flag will be updated to the bit contained in RD[n-1] before the shift for *n* > 0.

n can range from 0 to 16.

In immediate address mode, *n* is determined by the operand IMM4. *n* is considered to be 16 in IMM4 is equal to 0.

In dyadic address mode, *n* is determined by the content of RS. *n* is considered to be 16 if the content of RS is greater than 15.

CCR Effects

N	Z	V	C
Δ	Δ	Δ	Δ

N: Set if bit 15 of the result is set; cleared otherwise.

Z: Set if the result is $0000; cleared otherwise.

V: Set if a two´s complement overflow resulted from the operation; cleared otherwise.
$RD[15]_{old}$ ^ $RD[15]_{new}$

C: Set if *n* > 0 and RD[n-1] = 1; if n = 0 unaffected.

Code and CPU Cycles

Source Form	Address Mode	Machine Code											Cycles
LSR RD, #IMM4	IMM4	0	0	0	0	1	RD	IMM4		1	1	0	1	P
LSR RD, RS	DYA	0	0	0	0	1	RD	RS	1	0	1	0	1	P

MOV — Move Register Content — MOV

Operation

RS ⇒ RD (translates to OR RD, R0, RS)

Copies the content of RS to RD.

CCR Effects

N	Z	V	C
Δ	Δ	0	—

N: Set if bit 15 of the result is set; cleared otherwise.
Z: Set if the result is $0000; cleared otherwise.
V: 0; cleared.
C: Not affected.

Code and CPU Cycles

Source Form	Address Mode	Machine Code											Cycles
MOV RD, RS	TRI	0	0	0	1	0	RD	0	0	0	RS	1	0	P

NEG Two's Complement NEG

Operation

–RS ⇒ RD (translates to SUB RD, R0, RS)
–RD ⇒ RD (translates to SUB RD, R0, RD)

Performs a two's complement on a general purpose register.

CCR Effects

N	Z	V	C
Δ	Δ	Δ	Δ

N: Set if bit 15 of the result is set; cleared otherwise.

Z: Set if the result is $0000; cleared otherwise.

V: Set if a two´s complement overflow resulted from the operation; cleared otherwise.
RS[15] & $RD[15]_{new}$

C: Set if there is a carry from the bit 15 of the result; cleared otherwise
RS[15] | $RD[15]_{new}$

Code and CPU Cycles

Source Form	Address Mode	Machine Code											Cycles
NEG RD, RS	TRI	0	0	0	1	1	RD	0	0	0	RS	0	0	P
NEG RD	TRI	0	0	0	1	1	RD	0	0	0	RD	0	0	P

NOP No Operation NOP

Operation

No Operation for one cycle.

CCR Effects

N	Z	V	C
—	—	—	—

N: Not affected.
Z: Not affected.
V: Not affected.
C: Not affected.

Code and CPU Cycles

Source Form	Address Mode	Machine Code																Cycles
NOP	INH	0	0	0	0	0	0	0	1	0	0	0	0	0	0	0	0	P

OR — Logical OR — OR

Operation

RS1 | RS2 ⇒ RD
RD | IMM16⇒ RD (translates to ORL RD, #IMM16[7:0]; ORH RD, #IMM16[15:8]

Performs a bit wise logical OR between two 16 bit values and stores the result in the destination register RD.

CCR Effects

N	Z	V	C
Δ	Δ	0	—

N: Set if bit 15 of the result is set; cleared otherwise.
Z: Set if the result is $0000; cleared otherwise.
Refer to ORH instruction for #IMM16 operations.
V: 0; cleared.
C: Not affected.

Code and CPU Cycles

Source Form	Address Mode	Machine Code										Cycles
OR RD, RS1, RS2	TRI	0	0	0	1	0	RD	RS1	RS2	1	0	P
OR RD, #IMM16	IMM8	1	0	1	0	0	RD	IMM16[7:0]				P
	IMM8	1	0	1	0	1	RD	IMM16[15:8]				P

ORH Logical OR Immediate 8 bit Constant (High Byte) ORH

Operation

RD.H | IMM8 ⇒ RD.H

Performs a bit wise logical OR between the high byte of register RD and an immediate 8 bit constant and stores the result in the destination register RD.H. The low byte of RD is not affected.

CCR Effects

N	Z	V	C
Δ	Δ	0	—

N: Set if bit 15 of the result is set; cleared otherwise.
Z: Set if the 8 bit result is $00; cleared otherwise.
V: 0; cleared.
C: Not affected.

Code and CPU Cycles

Source Form	Address Mode	Machine Code							Cycles
ORH RD, #IMM8	IMM8	1	0	1	0	1	RD	IMM8	P

ORL — Logical OR Immediate 8 bit Constant (Low Byte) — ORL

Operation

RD.L | IMM8 ⇒ RD.L

Performs a bit wise logical OR between the low byte of register RD and an immediate 8 bit constant and stores the result in the destination register RD.L. The high byte of RD is not affected.

CCR Effects

N	Z	V	C
Δ	Δ	0	—

N: Set if bit 7 of the result is set; cleared otherwise.
Z: Set if the 8 bit result is $00; cleared otherwise.
V: 0; cleared.
C: Not affected.

Code and CPU Cycles

Source Form	Address Mode	Machine Code							Cycles
ORL RD, #IMM8	IMM8	1	0	1	0	0	RD	IMM8	P

PAR Calculate Parity PAR

Operation

Calculates the number of ones in the register RD. The Carry flag will be set if the number is odd, otherwise it will be cleared.

CCR Effects

N	Z	V	C
0	Δ	0	Δ

N: 0; cleared.
Z: Set if RD is $0000; cleared otherwise.
V: 0; cleared.
C: Set if there the number of ones in the register RD is odd; cleared otherwise.

Code and CPU Cycles

Source Form	Address Mode	Machine Code														Cycles
PAR, RD	MON	0	0	0	0	0	RD	1	1	1	1	0	1	0	1	P

ROL Rotate Left ROL

Operation

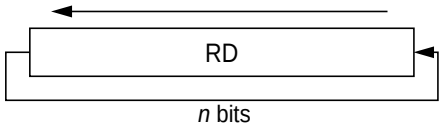

n = RS or IMM4

Rotates the bits in register RD *n* positions to the left. The lower *n* bits of the register RD are filled with the upper *n* bits. Two source forms are available. In the first form, the parameter *n* is contained in the instruction code as an immediate operand. In the second form, the parameter is contained in the lower bits of the source register RS[3:0]. All other bits in RS are ignored. If *n* is zero, no shift will take place and the register RD will be unaffected; however, the condition code flags will be updated.

CCR Effects

N	Z	V	C
Δ	Δ	0	—

N: Set if bit 15 of the result is set; cleared otherwise.
Z: Set if the result is $0000; cleared otherwise.
V: 0; cleared.
C: Not affected.

Code and CPU Cycles

Source Form	Address Mode	Machine Code											Cycles
ROL RD, #IMM4	IMM4	0	0	0	0	1	RD	IMM4		1	1	1	0	P
ROL RD, RS	DYA	0	0	0	0	1	RD	RS	1	0	1	1	0	P

ROR Rotate Right ROR

Operation

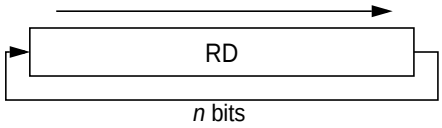

n = RS or IMM4

Rotates the bits in register RD *n* positions to the right. The upper *n* bits of the register RD are filled with the lower *n* bits. Two source forms are available. In the first form, the parameter *n* is contained in the instruction code as an immediate operand. In the second form, the parameter is contained in the lower bits of the source register RS[3:0]. All other bits in RS are ignored. If *n* is zero no shift will take place and the register RD will be unaffected; however, the condition code flags will be updated.

CCR Effects

N	Z	V	C
Δ	Δ	0	—

N: Set if bit 15 of the result is set; cleared otherwise.
Z: Set if the result is $0000; cleared otherwise.
V: 0; cleared.
C: Not affected.

Code and CPU Cycles

Source Form	Address Mode	Machine Code												Cycles
ROR RD, #IMM4	IMM4	0	0	0	0	1	RD	IMM4		1	1	1	1	P
ROR RD, RS	DYA	0	0	0	0	1	RD	RS	1	0	1	1	1	P

RTS Return to Scheduler RTS

Operation

Terminates the current thread of program execution and remains idle until a new thread is started by the hardware scheduler.

CCR Effects

N	Z	V	C
—	—	—	—

N: Not affected.
Z: Not affected.
V: Not affected.
C: Not affected.

Code and CPU Cycles

Source Form	Address Mode	Machine Code																Cycles
RTS	INH	0	0	0	0	0	0	1	0	0	0	0	0	0	0	0	0	PA

SBC Subtract with Carry SBC

Operation

RS1 - RS2 - C ⇒ RD

Subtracts the content of register RS2 and the value of the Carry bit from the content of register RS1 using binary subtraction and stores the result in the destination register RD. Also the zero flag is carried forward from the previous operation allowing 32 and more bit subtractions.

Example:

```
SUB     R6,R4,R2
SBC     R7,R5,R3          ; R7:R6 = R5:R4 - R3:R2
BCC                       ; conditional branch on 32 bit subtraction
```

CCR Effects

N	Z	V	C
Δ	Δ	Δ	Δ

N: Set if bit 15 of the result is set; cleared otherwise.

Z: Set if the result is $0000 and Z was set before this operation; cleared otherwise.

V: Set if a two´s complement overflow resulted from the operation; cleared otherwise.
$RS1[15] \& \overline{RS2[15]} \& \overline{RD[15]}_{new} \mid \overline{RS1[15]} \& RS2[15] \& RD[15]_{new}$

C: Set if there is a carry from bit 15 of the result; cleared otherwise.
$\overline{RS1[15]} \& RS2[15] \mid \overline{RS1[15]} \& RD[15]_{new} \mid RS2[15] \& RD[15]_{new}$

Code and CPU Cycles

Source Form	Address Mode	Machine Code										Cycles
SBC RD, RS1, RS2	TRI	0	0	0	1	1	RD	RS1	RS2	0	1	P

SEX Sign Extend Byte to Word SEX

Operation

The result in RD is the 16 bit sign extended representation of the original two's complement number in the low byte of RD.L.

CCR Effects

N	Z	V	C
Δ	Δ	0	—

N: Set if bit 15 of the result is set; cleared otherwise.
Z: Set if the result is $0000; cleared otherwise.
V: 0; cleared.
C: Not affected.

Code and CPU Cycles

Source Form	Address Mode	Machine Code														Cycles
SEX RD	MON	0	0	0	0	0	RD	1	1	1	1	0	1	0	0	P

SIF Set Interrupt Flag SIF

Operation

Sets the Interrupt Flag of an XGATE Channel. This instruction supports two source forms. If inherent address mode is used, then the interrupt flag of the current channel (XGCHID) will be set. If the monadic address form is used, the interrupt flag associated with the channel id number contained in RS[6:0] is set. The content of RS[15:7] is ignored.

CCR Effects

N	Z	V	C
—	—	—	—

N: Not affected.
Z: Not affected.
V: Not affected.
C: Not affected.

Code and CPU Cycles

Source Form	Address Mode	Machine Code																Cycles
SIF	INH	0	0	0	0	0	0	1	1	0	0	0	0	0	0	0	0	PA
SIF RS	MON	0	0	0	0	0	RS			1	1	1	1	0	1	1	1	PA

SSEM Set Semaphore SSEM

Operation

Attempts to set a semaphore. The state of the semaphore will be stored in the Carry-Flag:

1 = Semaphore is locked by the RISC core

0 = Semaphore is locked by the S12X_CPU

In monadic address mode, bits RS[2:0] select the semaphore to be set.

CCR Effects

N	Z	V	C
—	—	—	Δ

N: Not affected.
Z: Not affected.
V: Not affected.
C: Set if semaphore is locked by the RISC core; cleared otherwise.

Code and CPU Cycles

Source Form	Address Mode	Machine Code														Cycles
SSEM #IMM3	IMM3	0	0	0	0	0	IMM3	1	1	1	1	0	0	1	0	PA
SSEM RS	MON	0	0	0	0	0	RS	1	1	1	1	0	0	1	1	PA

STB — Store Byte to Memory (Low Byte) — STB

Operation

RS.L ⇒ M[RB, #OFFS5]
RS.L ⇒ M[RB, RI]
RS.L ⇒ M[RB, RI]; RI+1 ⇒ RI;
RI–1 ⇒ RI; RS.L ⇒ M[RB, RI][1]

Stores the low byte of register RD to memory.

CCR Effects

N	Z	V	C
—	—	—	—

N: Not affected.
Z: Not affected.
V: Not affected.
C: Not affected.

Code and CPU Cycles

Source Form	Address Mode	Machine Code										Cycles
STB RS, (RB, #OFFS5),	IDO5	0	1	0	1	0	RS	RB	OFFS5			Pw
STB RS, (RB, RI)	IDR	0	1	1	1	0	RS	RB	RI	0	0	Pw
STB RS, (RB, RI+)	IDR+	0	1	1	1	0	RS	RB	RI	0	1	Pw
STB RS, (RB, -RI)	-IDR	0	1	1	1	0	RS	RB	RI	1	0	Pw

1. If the same general purpose register is used as index (RI) and source register (RS), the unmodified content of the source register is written to the memory: RS.L ⇒ M[RB, RS-1]; RS-1 ⇒ RS

STW Store Word to Memory STW

Operation

RS ⇒ M[RB, #OFFS5]
RS ⇒ M[RB, RI]
RS ⇒ M[RB, RI]; RI+2 ⇒ RI;
RI–2 ⇒ RI; RS ⇒ M[RB, RI][1]

Stores the content of register RS to memory.

CCR Effects

N	Z	V	C
—	—	—	—

N: Not affected.
Z: Not affected.
V: Not affected.
C: Not affected.

Code and CPU Cycles

Source Form	Address Mode	Machine Code										Cycles
STW RS, (RB, #OFFS5)	IDO5	0	1	0	1	1	RS	RB	OFFS5			PW
STW RS, (RB, RI)	IDR	0	1	1	1	1	RS	RB	RI	0	0	PW
STW RS, (RB, RI+)	IDR+	0	1	1	1	1	RS	RB	RI	0	1	PW
STW RS, (RB, -RI)	-IDR	0	1	1	1	1	RS	RB	RI	1	0	PW

1. If the same general purpose register is used as index (RI) and source register (RS), the unmodified content of the source register is written to the memory: RS ⇒ M[RB, RS–2]; RS–2 ⇒ RS

SUB — Subtract without Carry — SUB

Operation

RS1 – RS2 ⇒ RD
RD – IMM16 ⇒ RD (translates to SUBL RD, #IMM16[7:0]; SUBH RD, #IMM16{15:8])

Subtracts two 16 bit values and stores the result in the destination register RD.

CCR Effects

N	Z	V	C
Δ	Δ	Δ	Δ

N: Set if bit 15 of the result is set; cleared otherwise.

Z: Set if the result is $0000; cleared otherwise.

V: Set if a two´s complement overflow resulted from the operation; cleared otherwise.
$RS1[15] \& \overline{RS2[15]} \& \overline{RD[15]}_{new} \mid \overline{RS1[15]} \& RS2[15] \& RD[15]_{new}$
Refer to SUBH instruction for #IMM16 operations.

C: Set if there is a carry from the bit 15 of the result; cleared otherwise.
$\overline{RS1[15]} \& RS2[15] \mid \overline{RS1[15]} \& RD[15]_{new} \mid RS2[15] \& RD[15]_{new}$
Refer to SUBH instruction for #IMM16 operations.

Code and CPU Cycles

Source Form	Address Mode	Machine Code										Cycles
SUB RD, RS1, RS2	TRI	0	0	0	1	1	RD	RS1	RS2	0	0	P
SUB RD, #IMM16	IMM8	1	1	0	0	0	RD	IMM16[7:0]				P
	IMM8	1	1	0	0	1	RD	IMM16[15:8]				P

SUBH — Subtract Immediate 8 bit Constant (High Byte) — SUBH

Operation

RD – IMM8:$00 ⇒ RD

Subtracts a signed immediate 8 bit constant from the content of high byte of register RD and using binary subtraction and stores the result in the high byte of destination register RD. This instruction can be used after an SUBL for a 16 bit immediate subtraction.

Example:

```
SUBL     R2,#LOWBYTE
SUBH     R2,#HIGHBYTE      ; R2 = R2 - 16 bit immediate
```

CCR Effects

N	Z	V	C
Δ	Δ	Δ	Δ

N: Set if bit 15 of the result is set; cleared otherwise.

Z: Set if the result is $0000; cleared otherwise.

V: Set if a two´s complement overflow resulted from the operation; cleared otherwise.
$RD[15]_{old}$ & $\overline{IMM8[7]}$ & $\overline{RD[15]}_{new}$ | $\overline{RD[15]}_{old}$ & IMM8[7] & $RD[15]_{new}$

C: Set if there is a carry from the bit 15 of the result; cleared otherwise.
$\overline{RD[15]}_{old}$ & IMM8[7] | $\overline{RD[15]}_{old}$ & $RD[15]_{new}$ | IMM8[7] & $RD[15]_{new}$

Code and CPU Cycles

Source Form	Address Mode	Machine Code							Cycles
SUBH RD, #IMM8	IMM8	1	1	0	0	1	RD	IMM8	P

SUBL Subtract Immediate 8 bit Constant (Low Byte) SUBL

Operation

RD – $00:IMM8 ⇒ RD

Subtracts an immediate 8 bit constant from the content of register RD using binary subtraction and stores the result in the destination register RD.

CCR Effects

N	Z	V	C
Δ	Δ	Δ	Δ

N: Set if bit 15 of the result is set; cleared otherwise.

Z: Set if the result is $0000; cleared otherwise.

V: Set if a two´s complement overflow resulted from the 8 bit operation; cleared otherwise.
$RD[15]_{old}$ & $\overline{RD[15]}_{new}$

C: Set if there is a carry from the bit 15 of the result; cleared otherwise.
$\overline{RD[15]}_{old}$ & $RD[15]_{new}$

Code and CPU Cycles

Source Form	Address Mode	Machine Code							Cycles
SUBL RD, #IMM8	IMM8	1	1	0	0	0	RD	IMM8	P

TFR Transfer from and to Special Registers TFR

Operation

TFR RD,CCR: CCR ⇒ RD[3:0]; 0 ⇒ RD[15:4]
TFR CCR,RD: RD[3:0] ⇒ CCR
TFR RD,PC: PC+4 ⇒ RD

Transfers the content of one RISC core register to another.
The TFR RD,PC instruction can be used to implement relative subroutine calls.

Example:

```
        TFR     R7,PC    ;Return address (RETADDR) is stored in R7
        BRA     SUBR     ;Relative branch to subroutine (SUBR)
RETADDR ...

SUBR    ...
        JAL     R7       ;Jump to return address (RETADDR)
```

CCR Effects

TFR RD,CCR, TFR RD,PC:

N	Z	V	C
—	—	—	—

N: Not affected.
Z: Not affected.
V: Not affected.
C: Not affected.

TFR CCR,RS:

N	Z	V	C
Δ	Δ	Δ	Δ

N: RS[3].
Z: RS[2].
V: RS[1].
C: RS[0].

Code and CPU Cycles

Source Form	Address Mode	Machine Code														Cycles
TFR RD,CCR CCR ⇒ RD	MON	0	0	0	0	0	RD	1	1	1	1	1	0	0	0	P
TFR CCR,RS RS ⇒ CCR	MON	0	0	0	0	0	RS	1	1	1	1	1	0	0	1	P
TFR RD,PCPC+4 ⇒ RD	MON	0	0	0	0	0	RD	1	1	1	1	1	0	1	0	P

TST Test Register TST

Operation

RS – 0 ⇒ NONE (translates to SUB R0, RS, R0)

Subtracts zero from the content of register RS using binary subtraction and discards the result.

CCR Effects

N	Z	V	C
Δ	Δ	Δ	Δ

N: Set if bit 15 of the result is set; cleared otherwise.

Z: Set if the result is $0000; cleared otherwise.

V: Set if a two´s complement overflow resulted from the operation; cleared otherwise.
RS[15] & $\overline{\text{result[15]}}$

C: Set if there is a carry from the bit 15 of the result; cleared otherwise.
$\overline{\text{RS1[15]}}$ & result[15]

Code and CPU Cycles

Source Form	Address Mode	Machine Code												Cycles
TST RS	TRI	0	0	0	1	1	0	0	0	RS1	0	0	0	0	0	P

XNOR Logical Exclusive NOR XNOR

Operation

~(RS1 ^ RS2) ⇒ RD
~(RD ^ IMM16)⇒ RD
(translates to XNOR RD, #IMM16{15:8]; XNOR RD, #IMM16[7:0])

Performs a bit wise logical exclusive NOR between two 16 bit values and stores the result in the destination register RD.

Remark: Using R0 as a source registers will calculate the one's complement of the other source register. Using R0 as both source operands will fill RD with $FFFF.

CCR Effects

N	Z	V	C
Δ	Δ	0	—

N: Set if bit 15 of the result is set; cleared otherwise.
Z: Set if the result is $0000; cleared otherwise.
Refer to XNORH instruction for #IMM16 operations.
V: 0; cleared.
C: Not affected.

Code and CPU Cycles

Source Form	Address Mode	Machine Code										Cycles
XNOR RD, RS1, RS2	TRI	0	0	0	1	0	RD	RS1	RS2	1	1	P
XNOR RD, #IMM16	IMM8	1	0	1	1	0	RD	IMM16[7:0]				P
	IMM8	1	0	1	1	1	RD	IMM16[15:8]				P

XNORH Logical Exclusive NOR Immediate 8 bit Constant (High Byte) XNORH

Operation

~(RD.H ^ IMM8) ⇒ RD.H

Performs a bit wise logical exclusive NOR between the high byte of register RD and an immediate 8 bit constant and stores the result in the destination register RD.H. The low byte of RD is not affected.

CCR Effects

N	Z	V	C
Δ	Δ	0	—

N: Set if bit 15 of the result is set; cleared otherwise.
Z: Set if the 8 bit result is $00; cleared otherwise.
V: 0; cleared.
C: Not affected.

Code and CPU Cycles

Source Form	Address Mode	Machine Code							Cycles
XNORH RD, #IMM8	IMM8	1	0	1	1	1	RD	IMM8	P

XNORL Logical Exclusive NOR Immediate 8 bit Constant (Low Byte) XNORL

Operation

~(RD.L ^ IMM8) ⇒ RD.L

Performs a bit wise logical exclusive NOR between the low byte of register RD and an immediate 8 bit constant and stores the result in the destination register RD.L. The high byte of RD is not affected.

CCR Effects

N	Z	V	C
Δ	Δ	0	—

N: Set if bit 7 of the result is set; cleared otherwise.
Z: Set if the 8 bit result is $00; cleared otherwise.
V: 0; cleared.
C: Not affected.

Code and CPU Cycles

Source Form	Address Mode	Machine Code							Cycles
XNORL RD, #IMM8	IMM8	1	0	1	1	0	RD	IMM8	P

6.8.6 Instruction Coding

Table 6-17 summarizes all XGATE instructions in the order of their machine coding.

Table 6-17. Instruction Set Summary (Sheet 1 of 3)

Functionality	15	14	13	12	11	10	9	8	7	6	5	4	3	2	1	0
Return to Scheduler and Others																
BRK	0	0	0	0	0	0	0	0	0	0	0	0	0	0	0	0
NOP	0	0	0	0	0	0	0	1	0	0	0	0	0	0	0	0
RTS	0	0	0	0	0	0	1	0	0	0	0	0	0	0	0	0
SIF	0	0	0	0	0	0	1	1	0	0	0	0	0	0	0	0
Semaphore Instructions																
CSEM IMM3	0	0	0	0	0	IMM3			1	1	1	1	0	0	0	0
CSEM RS	0	0	0	0	0	RS			1	1	1	1	0	0	0	1
SSEM IMM3	0	0	0	0	0	IMM3			1	1	1	1	0	0	1	0
SSEM RS	0	0	0	0	0	RS			1	1	1	1	0	0	1	1
Single Register Instructions																
SEX RD	0	0	0	0	0	RD			1	1	1	1	0	1	0	0
PAR RD	0	0	0	0	0	RD			1	1	1	1	0	1	0	1
JAL RD	0	0	0	0	0	RD			1	1	1	1	0	1	1	0
SIF RS	0	0	0	0	0	RS			1	1	1	1	0	1	1	1
Special Move instructions																
TFR RD,CCR	0	0	0	0	0	RD			1	1	1	1	1	0	0	0
TFR CCR,RS	0	0	0	0	0	RS			1	1	1	1	1	0	0	1
TFR RD,PC	0	0	0	0	0	RD			1	1	1	1	1	0	1	0
Shift instructions Dyadic																
BFFO RD, RS	0	0	0	0	1	RD			RS			1	0	0	0	0
ASR RD, RS	0	0	0	0	1	RD			RS			1	0	0	0	1
CSL RD, RS	0	0	0	0	1	RD			RS			1	0	0	1	0
CSR RD, RS	0	0	0	0	1	RD			RS			1	0	0	1	1
LSL RD, RS	0	0	0	0	1	RD			RS			1	0	1	0	0
LSR RD, RS	0	0	0	0	1	RD			RS			1	0	1	0	1
ROL RD, RS	0	0	0	0	1	RD			RS			1	0	1	1	0
ROR RD, RS	0	0	0	0	1	RD			RS			1	0	1	1	1
Shift instructions immediate																
ASR RD, #IMM4	0	0	0	0	1	RD			IMM4				1	0	0	1
CSL RD, #IMM4	0	0	0	0	1	RD			IMM4				1	0	1	0
CSR RD, #IMM4	0	0	0	0	1	RD			IMM4				1	0	1	1
LSL RD, #IMM4	0	0	0	0	1	RD			IMM4				1	1	0	0
LSR RD, #IMM4	0	0	0	0	1	RD			IMM4				1	1	0	1
ROL RD, #IMM4	0	0	0	0	1	RD			IMM4				1	1	1	0
ROR RD, #IMM4	0	0	0	0	1	RD			IMM4				1	1	1	1

Table 6-17. Instruction Set Summary (Sheet 2 of 3)

Functionality	15	14	13	12	11	10	9	8	7	6	5	4	3	2	1	0
Logical Triadic																
AND RD, RS1, RS2	0	0	0	1	0	RD			RS1			RS2			0	0
OR RD, RS1, RS2	0	0	0	1	0	RD			RS1			RS2			1	0
XNOR RD, RS1, RS2	0	0	0	1	0	RD			RS1			RS2			1	1
Arithmetic Triadic	For compare use SUB R0,Rs1,Rs2															
SUB RD, RS1, RS2	0	0	0	1	1	RD			RS1			RS2			0	0
SBC RD, RS1, RS2	0	0	0	1	1	RD			RS1			RS2			0	1
ADD RD, RS1, RS2	0	0	0	1	1	RD			RS1			RS2			1	0
ADC RD, RS1, RS2	0	0	0	1	1	RD			RS1			RS2			1	1
Branches																
BCC REL9	0	0	1	0	0	0	0	REL9								
BCS REL9	0	0	1	0	0	0	1	REL9								
BNE REL9	0	0	1	0	0	1	0	REL9								
BEQ REL9	0	0	1	0	0	1	1	REL9								
BPL REL9	0	0	1	0	1	0	0	REL9								
BMI REL9	0	0	1	0	1	0	1	REL9								
BVC REL9	0	0	1	0	1	1	0	REL9								
BVS REL9	0	0	1	0	1	1	1	REL9								
BHI REL9	0	0	1	1	0	0	0	REL9								
BLS REL9	0	0	1	1	0	0	1	REL9								
BGE REL9	0	0	1	1	0	1	0	REL9								
BLT REL9	0	0	1	1	0	1	1	REL9								
BGT REL9	0	0	1	1	1	0	0	REL9								
BLE REL9	0	0	1	1	1	0	1	REL9								
BRA REL10	0	0	1	1	1	1	REL10									
Load and Store Instructions																
LDB RD, (RB, #OFFS5)	0	1	0	0	0	RD			RB			OFFS5				
LDW RD, (RB, #OFFS5)	0	1	0	0	1	RD			RB			OFFS5				
STB RS, (RB, #OFFS5)	0	1	0	1	0	RS			RB			OFFS5				
STW RS, (RB, #OFFS5)	0	1	0	1	1	RS			RB			OFFS5				
LDB RD, (RB, RI)	0	1	1	0	0	RD			RB			RI			0	0
LDW RD, (RB, RI)	0	1	1	0	1	RD			RB			RI			0	0
STB RS, (RB, RI)	0	1	1	1	0	RS			RB			RI			0	0
STW RS, (RB, RI)	0	1	1	1	1	RS			RB			RI			0	0
LDB RD, (RB, RI+)	0	1	1	0	0	RD			RB			RI			0	1
LDW RD, (RB, RI+)	0	1	1	0	1	RD			RB			RI			0	1
STB RS, (RB, RI+)	0	1	1	1	0	RS			RB			RI			0	1
STW RS, (RB, RI+)	0	1	1	1	1	RS			RB			RI			0	1
LDB RD, (RB, –RI)	0	1	1	0	0	RD			RB			RI			1	0
LDW RD, (RB, –RI)	0	1	1	0	1	RD			RB			RI			1	0
STB RS, (RB, –RI)	0	1	1	1	0	RS			RB			RI			1	0
STW RS, (RB, –RI)	0	1	1	1	1	RS			RB			RI			1	0
Bit Field Instructions																
BFEXT RD, RS1, RS2	0	1	1	0	0	RD			RS1			RS2			1	1
BFINS RD, RS1, RS2	0	1	1	0	1	RD			RS1			RS2			1	1
BFINSI RD, RS1, RS2	0	1	1	1	0	RD			RS1			RS2			1	1
BFINSX RD, RS1, RS2	0	1	1	1	1	RD			RS1			RS2			1	1
Logic Immediate Instructions																
ANDL RD, #IMM8	1	0	0	0	0	RD			IMM8							

Table 6-17. Instruction Set Summary (Sheet 3 of 3)

Functionality	15	14	13	12	11	10	9	8	7	6	5	4	3	2	1	0
ANDH RD, #IMM8	1	0	0	0	1	RD			IMM8							
BITL RD, #IMM8	1	0	0	1	0	RD			IMM8							
BITH RD, #IMM8	1	0	0	1	1	RD			IMM8							
ORL RD, #IMM8	1	0	1	0	0	RD			IMM8							
ORH RD, #IMM8	1	0	1	0	1	RD			IMM8							
XNORL RD, #IMM8	1	0	1	1	0	RD			IMM8							
XNORH RD, #IMM8	1	0	1	1	1	RD			IMM8							
Arithmetic Immediate Instructions																
SUBL RD, #IMM8	1	1	0	0	0	RD			IMM8							
SUBH RD, #IMM8	1	1	0	0	1	RD			IMM8							
CMPL RS, #IMM8	1	1	0	1	0	RS			IMM8							
CPCH RS, #IMM8	1	1	0	1	1	RS			IMM8							
ADDL RD, #IMM8	1	1	1	0	0	RD			IMM8							
ADDH RD, #IMM8	1	1	1	0	1	RD			IMM8							
LDL RD, #IMM8	1	1	1	1	0	RD			IMM8							
LDH RD, #IMM8	1	1	1	1	1	RD			IMM8							

6.9 Initialization and Application Information

6.9.1 Initialization

The recommended initialization of the XGATE is as follows:

1. Clear the XGE bit to suppress any incoming service requests.
2. Make sure that no thread is running on the XGATE. This can be done in several ways:
   a) Poll the XGCHID register until it reads $00. Also poll XGDBG and XGSWEIF to make sure that the XGATE has not been stopped.
   b) Enter Debug Mode by setting the XGDBG bit. Clear the XGCHID register. Clear the XGDBG bit.

   The recommended method is a).
3. Set the XGVBR register to the lowest address of the XGATE vector space.
4. Clear all Channel ID flags.
5. Copy XGATE vectors and code into the RAM.
6. Initialize the S12X_INT module.
7. Enable the XGATE by setting the XGE bit.

The following code example implements the XGATE initialization sequence.

6.9.2 Code Example (Transmit "Hello World!" on SCI)

```
                        CPU   S12X
                        ;##########################################
                        ;#                   SYMBOLS              #
                        ;##########################################
SCI_REGS                EQU   $00C8           ;SCI register space
SCIBDH                  EQU   SCI_REGS+$00    ;SCI Baud Rate Register
SCIBDL                  EQU   SCI_REGS+$00    ;SCI Baud Rate Register
SCICR2                  EQU   SCI_REGS+$03    ;SCI Control Register 2
SCISR1                  EQU   SCI_REGS+$04    ;SCI Status  Register 1
SCIDRL                  EQU   SCI_REGS+$07    ;SCI Control Register 2
TIE                     EQU   $80             ;TIE bit mask
TE                      EQU   $08             ;TE bit mask
RE                      EQU   $04             ;RE bit mask
SCI_VEC                 EQU   $D6             ;SCI vector number

INT_REGS                      EQU             $0120           ;S12X_INT register space
INT_CFADDR              EQU   INT_REGS+$07    ;Interrupt Configuration Address Register
INT_CFDATA              EQU   INT_REGS+$08    ;Interrupt Configuration Data Registers
RQST                    EQU   $80             ;RQST bit mask

XGATE_REGS              EQU   $0380           ;XGATE register space
XGMCTL                  EQU   XGATE_REGS+$00  ;XGATE Module Control Register
XGMCTL_CLEAR            EQU   $FA02           ;Clear all XGMCTL bits
XGMCTL_ENABLE           EQU   $8282           ;Enable XGATE
XGCHID                  EQU   XGATE_REGS+$02  ;XGATE Channel ID Register
XGVBR                   EQU   XGATE_REGS+$06  ;XGATE ISP Select Register
XGIF                    EQU   XGATE_REGS+$08  ;XGATE Interrupt Flag Vector
```

```
XGSWT                   EQU  XGATE_REGS+$18  ;XGATE Software Trigger Register
XGSEM                   EQU  XGATE_REGS+$1A  ;XGATE Semaphore Register

RPAGE                   EQU  $0016

RAM_SIZE                EQU  32*$400         ;32k RAM

RAM_START               EQU  $1000
RAM_START_XG            EQU  $10000-RAM_SIZE
RAM_START_GLOB          EQU  $100000-RAM_SIZE

XGATE_VECTORS           EQU  RAM_START
XGATE_VECTORS_XG        EQU  RAM_START_XG

XGATE_DATA              EQU  RAM_START+(4*128)
XGATE_DATA_XG           EQU  RAM_START_XG+(4*128)

XGATE_CODE              EQU  XGATE_DATA+(XGATE_CODE_FLASH-XGATE_DATA_FLASH)
XGATE_CODE_XG           EQU  XGATE_DATA_XG+(XGATE_CODE_FLASH-XGATE_DATA_FLASH)

BUS_FREQ_HZ             EQU  40000000

                        ;###########################################
                        ;#           S12XE VECTOR TABLE            #
                        ;###########################################
                        ORG  $FF10 ;non-maskable interrupts
                        DW   DUMMY_ISR DUMMY_ISR DUMMY_ISR DUMMY_ISR

                        ORG  $FFF4 ;non-maskable interrupts
                        DW   DUMMY_ISR DUMMY_ISR DUMMY_ISR

                        ;###########################################
                        ;#                DISABLE COP              #
                        ;###########################################
                        ORG  $FF0E
                        DW   $FFFE

                        ORG  $C000
START_OF_CODE
                        ;###########################################
                        ;#          INITIALIZE S12XE CORE          #
                        ;###########################################
                        SEI
                        MOVB #(RAM_START_GLOB>>12), RPAGE;set RAM page

                        ;###########################################
                        ;#              INITIALIZE SCI             #
                        ;###########################################
INIT_SCI                MOVW #(BUS_FREQ_HZ/(16*9600)), SCIBDH;set baud rate
                        MOVB #(TIE|TE), SCICR2;enable tx buffer empty interrupt

                        ;###########################################
                        ;#           INITIALIZE S12X_INT           #
                        ;###########################################
INIT_INT                MOVB #(SCI_VEC&$F0), INT_CFADDR ;switch SCI interrupts to XGATE
                        MOVB #RQST|$01, INT_CFDATA+((SCI_VEC&$0F)>>1)
```

```
                        ;##########################################
                        ;#              INITIALIZE XGATE          #
                        ;##########################################
INIT_XGATE              MOVW  #XGMCTL_CLEAR , XGMCTL;clear all XGMCTL bits

INIT_XGATE_BUSY_LOOP    TST   XGCHID          ;wait until current thread is finished
                        BNE   INIT_XGATE_BUSY_LOOP

                        LDX   #XGIF           ;clear all channel interrupt flags
                        LDD   #$FFFF
                        STD   2,X+
                        STD   2,X+
                        STD   2,X+
                        STD   2,X+
                        STD   2,X+
                        STD   2,X+
                        STD   2,X+
                        STD   2,X+

                        MOVW  #XGATE_VECTORS_XG, XGVBR;set vector base register

                        MOVW  #$FF00, XGSWT   ;clear all software triggers

                        ;##########################################
                        ;#      INITIALIZE XGATE VECTOR TABLE      #
                        ;##########################################
                        LDAA  #128            ;build XGATE vector table
                        LDY   #XGATE_VECTORS
INIT_XGATE_VECTAB_LOOP  MOVW  #XGATE_DUMMY_ISR_XG, 4,Y+
                        DBNE  A, INIT_XGATE_VECTAB_LOOP

                        MOVW  #XGATE_CODE_XG, RAM_START+(2*SCI_VEC)
                        MOVW  #XGATE_DATA_XG, RAM_START+(2*SCI_VEC)+2

                        ;##########################################
                        ;#               COPY XGATE CODE          #
                        ;##########################################
COPY_XGATE_CODE         LDX   #XGATE_DATA_FLASH
COPY_XGATE_CODE_LOOP    MOVW  2,X+, 2,Y+
                        MOVW  2,X+, 2,Y+
                        MOVW  2,X+, 2,Y+
                        MOVW  2,X+, 2,Y+
                        CPX   #XGATE_CODE_FLASH_END
                        BLS   COPY_XGATE_CODE_LOOP

                        ;##########################################
                        ;#                START XGATE               #
                        ;##########################################
START_XGATE             MOVW  #XGMCTL_ENABLE, XGMCTL;enable XGATE
                        BRA   *

                        ;##########################################
                        ;#     DUMMY INTERRUPT SERVICE ROUTINE     #
                        ;##########################################
DUMMY_ISR               RTI

                        CPU   XGATE
```

```
                        ;##########################################
                        ;#                XGATE DATA              #
                        ;##########################################
                        ALIGN 1
XGATE_DATA_FLASH        EQU   *
XGATE_DATA_SCI          EQU   *-XGATE_DATA_FLASH
                        DW    SCI_REGS        ;pointer to SCI register space
XGATE_DATA_IDX          EQU   *-XGATE_DATA_FLASH
                        DB    XGATE_DATA_MSG  ;string pointer
XGATE_DATA_MSG          EQU   *-XGATE_DATA_FLASH
                        FCC   "Hello World!   ;ASCII string
                        DB    $0D             ;CR

                        ;##########################################
                        ;#               XGATE CODE               #
                        ;##########################################
                        ALIGN 1
XGATE_CODE_FLASH        LDW   R2,(R1,#XGATE_DATA_SCI);SCI -> R2
                        LDB   R3,(R1,#XGATE_DATA_IDX);msg -> R3
                        LDB   R4,(R1,R3+)     ;curr. char -> R4
                        STB   R3,(R1,#XGATE_DATA_IDX);R3 -> idx
                        LDB   R0,(R2,#(SCISR1-SCI_REGS));initiate SCI transmit
                        STB   R4,(R2,#(SCIDRL-SCI_REGS));initiate SCI transmit
                        CMPL  R4,#$0D
                        BEQ   XGATE_CODE_DONE
                        RTS
XGATE_CODE_DONE         LDL   R4,#$00                        ;disable SCI interrupts
                        STB   R4,(R2,#(SCICR2-SCI_REGS))
                        LDL   R3,#XGATE_DATA_MSG;reset R3
                        STB   R3,(R1,#XGATE_DATA_IDX)
XGATE_CODE_FLASH_END    RTS
XGATE_DUMMY_ISR_XG      EQU   (XGATE_CODE_FLASH_END-XGATE_CODE_FLASH)+XGATE_CODE_XG
```

Chapter 7
Enhanced Capture Timer (S12ECT16B8CV2)

7.1 Introduction

The HCS12 enhanced capture timer module has the features of the HCS12 standard timer module enhanced by additional features in order to enlarge the field of applications, in particular for automotive ABS applications.

This design specification describes the standard timer as well as the additional features.

The basic timer consists of a 16-bit, software-programmable counter driven by a prescaler. This timer can be used for many purposes, including input waveform measurements while simultaneously generating an output waveform. Pulse widths can vary from microseconds to many seconds.

A full access for the counter registers or the input capture/output compare registers will take place in one clock cycle. Accessing high byte and low byte separately for all of these registers will not yield the same result as accessing them in one word.

7.1.1 Features

- 16-bit buffer register for four input capture (IC) channels.
- Four 8-bit pulse accumulators with 8-bit buffer registers associated with the four buffered IC channels. Configurable also as two 16-bit pulse accumulators.
- 16-bit modulus down-counter with 8-bit prescaler.
- Four user-selectable delay counters for input noise immunity increase.

7.1.2 Modes of Operation

- Stop — Timer and modulus counter are off since clocks are stopped.
- Freeze — Timer and modulus counter keep on running, unless the TSFRZ bit in the TSCR1 register is set to one.
- Wait — Counters keep on running, unless the TSWAI bit in the TSCR1 register is set to one.
- Normal — Timer and modulus counter keep on running, unless the TEN bit in the TSCR1 register or the MCEN bit in the MCCTL register are cleared.

7.1.3 Block Diagram

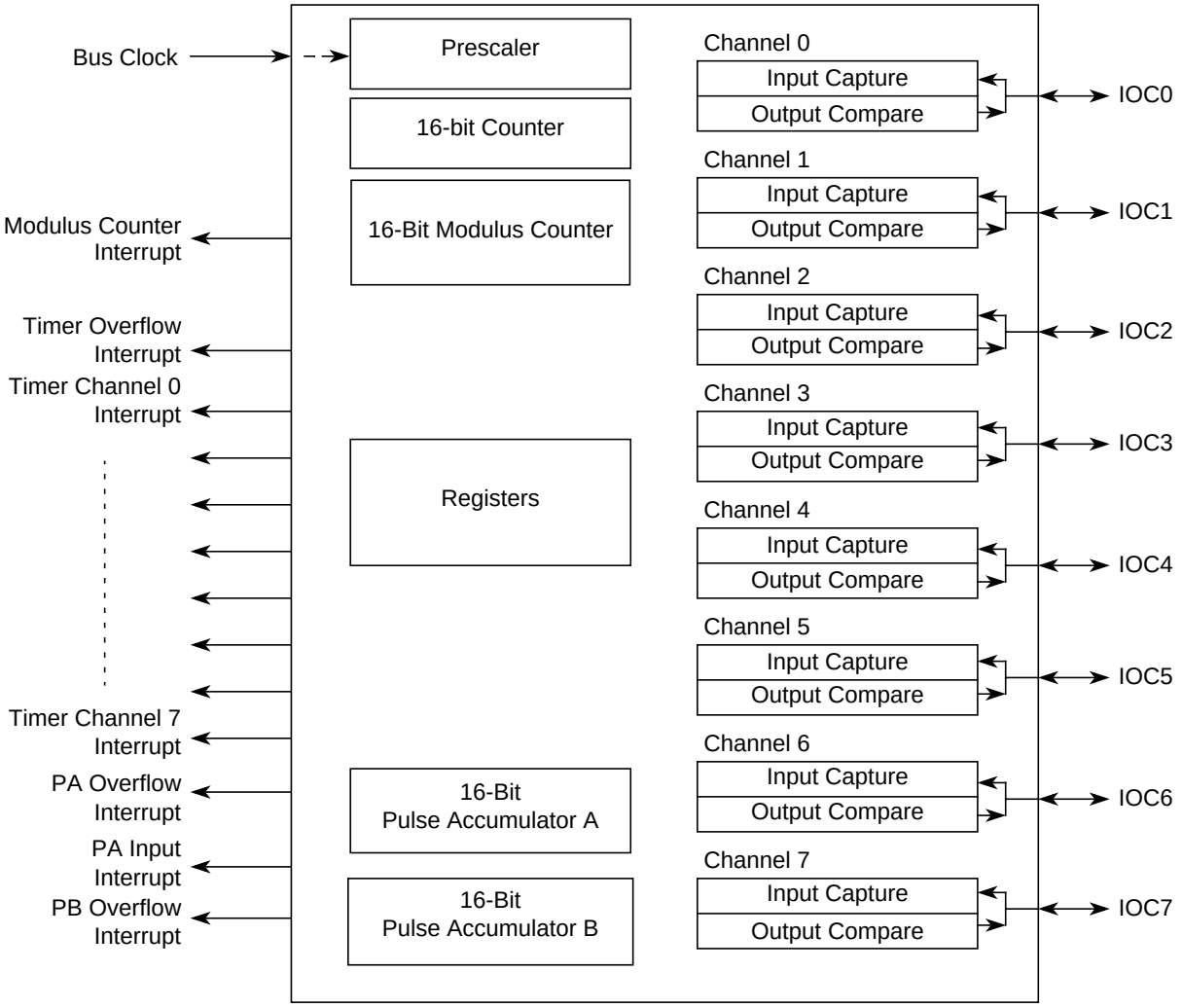

Figure 7-1. ECT Block Diagram

7.2 External Signal Description

The ECT module has a total of eight external pins.

7.2.1 IOC7 — Input Capture and Output Compare Channel 7

This pin serves as input capture or output compare for channel 7.

7.2.2 IOC6 — Input Capture and Output Compare Channel 6

This pin serves as input capture or output compare for channel 6.

7.2.3 IOC5 — Input Capture and Output Compare Channel 5

This pin serves as input capture or output compare for channel 5.

7.2.4 IOC4 — Input Capture and Output Compare Channel 4

This pin serves as input capture or output compare for channel 4.

7.2.5 IOC3 — Input Capture and Output Compare Channel 3

This pin serves as input capture or output compare for channel 3.

7.2.6 IOC2 — Input Capture and Output Compare Channel 2

This pin serves as input capture or output compare for channel 2.

7.2.7 IOC1 — Input Capture and Output Compare Channel 1

This pin serves as input capture or output compare for channel 1.

7.2.8 IOC0 — Input Capture and Output Compare Channel 0

This pin serves as input capture or output compare for channel 0.

NOTE

For the description of interrupts see Section 7.4.3, “Interrupts”.

7.3 Memory Map and Register Definition

This section provides a detailed description of all memory and registers.

7.3.1 Module Memory Map

The memory map for the ECT module is given below in Table 7-1. The address listed for each register is the address offset. The total address for each register is the sum of the base address for the ECT module and the address offset for each register.

Table 7-1. ECT Memory Map

Address Offset	Register	Access
0x0000	Timer Input Capture/Output Compare Select (TIOS)	R/W
0x0001	Timer Compare Force Register (CFORC)	R/W[1]
0x0002	Output Compare 7 Mask Register (OC7M)	R/W
0x0003	Output Compare 7 Data Register (OC7D)	R/W
0x0004	Timer Count Register High (TCNT)	R/W[2]
0x0005	Timer Count Register Low (TCNT)	R/W[2]
0x0006	Timer System Control Register 1 (TSCR1)	R/W
0x0007	Timer Toggle Overflow Register (TTOV)	R/W
0x0008	Timer Control Register 1 (TCTL1)	R/W
0x0009	Timer Control Register 2 (TCTL2)	R/W
0x000A	Timer Control Register 3 (TCTL3)	R/W
0x000B	Timer Control Register 4 (TCTL4)	R/W
0x000C	Timer Interrupt Enable Register (TIE)	R/W
0x000D	Timer System Control Register 2 (TSCR2)	R/W
0x000E	Main Timer Interrupt Flag 1 (TFLG1)	R/W
0x000F	Main Timer Interrupt Flag 2 (TFLG2)	R/W
0x0010	Timer Input Capture/Output Compare Register 0 High (TC0)	R/W[3]
0x0011	Timer Input Capture/Output Compare Register 0 Low (TC0)	R/W[3]
0x0012	Timer Input Capture/Output Compare Register 1 High (TC1)	R/W[3]
0x0013	Timer Input Capture/Output Compare Register 1 Low (TC1)	R/W[3]
0x0014	Timer Input Capture/Output Compare Register 2 High (TC2)	R/W[3]
0x0015	Timer Input Capture/Output Compare Register 2 Low (TC2)	R/W[3]
0x0016	Timer Input Capture/Output Compare Register 3 High (TC3)	R/W[3]
0x0017	Timer Input Capture/Output Compare Register 3 Low (TC3)	R/W[3]
0x0018	Timer Input Capture/Output Compare Register 4 High (TC4)	R/W[3]
0x0019	Timer Input Capture/Output Compare Register 4 Low (TC4)	R/W[3]
0x001A	Timer Input Capture/Output Compare Register 5 High (TC5)	R/W[3]
0x001B	Timer Input Capture/Output Compare Register 5 Low (TC5)	R/W[3]
0x001C	Timer Input Capture/Output Compare Register 6 High (TC6)	R/W[3]
0x001D	Timer Input Capture/Output Compare Register 6 Low (TC6)	R/W[3]

Table 7-1. ECT Memory Map (continued)

Address Offset	Register	Access
0x001E	Timer Input Capture/Output Compare Register 7 High (TC7)	R/W[3]
0x001F	Timer Input Capture/Output Compare Register 7 Low (TC7)	R/W[3]
0x0020	16-Bit Pulse Accumulator A Control Register (PACTL)	R/W
0x0021	Pulse Accumulator A Flag Register (PAFLG)	R/W
0x0022	Pulse Accumulator Count Register 3 (PACN3)	R/W
0x0023	Pulse Accumulator Count Register 2 (PACN2)	R/W
0x0024	Pulse Accumulator Count Register 1 (PACN1)	R/W
0x0025	Pulse Accumulator Count Register 0 (PACN0)	R/W
0x0026	16-Bit Modulus Down Counter Register (MCCTL)	R/W
0x0027	16-Bit Modulus Down Counter Flag Register (MCFLG)	R/W
0x0028	Input Control Pulse Accumulator Register (ICPAR)	R/W
0x0029	Delay Counter Control Register (DLYCT)	R/W
0x002A	Input Control Overwrite Register (ICOVW)	R/W
0x002B	Input Control System Control Register (ICSYS)	R/W[4]
0x002C	Reserved	--
0x002D	Timer Test Register (TIMTST)	R/W[2]
0x002E	Precision Timer Prescaler Select Register (PTPSR)	R/W
0x002F	Precision Timer Modulus Counter Prescaler Select Register (PTMCPSR)	R/W
0x0030	16-Bit Pulse Accumulator B Control Register (PBCTL)	R/W
0x0031	16-Bit Pulse Accumulator B Flag Register (PBFLG)	R/W
0x0032	8-Bit Pulse Accumulator Holding Register 3 (PA3H)	R/W[5]
0x0033	8-Bit Pulse Accumulator Holding Register 2 (PA2H)	R/W[5]
0x0034	8-Bit Pulse Accumulator Holding Register 1 (PA1H)	R/W[5]
0x0035	8-Bit Pulse Accumulator Holding Register 0 (PA0H)	R/W[5]
0x0036	Modulus Down-Counter Count Register High (MCCNT)	R/W
0x0037	Modulus Down-Counter Count Register Low (MCCNT)	R/W
0x0038	Timer Input Capture Holding Register 0 High (TC0H)	R/W[5]
0x0039	Timer Input Capture Holding Register 0 Low (TC0H)	R/W[5]
0x003A	Timer Input Capture Holding Register 1 High(TC1H)	R/W[5]
0x003B	Timer Input Capture Holding Register 1 Low (TC1H)	R/W[5]
0x003C	Timer Input Capture Holding Register 2 High (TC2H)	R/W[5]
0x003D	Timer Input Capture Holding Register 2 Low (TC2H)	R/W[5]
0x003E	Timer Input Capture Holding Register 3 High (TC3H)	R/W[5]
0x003F	Timer Input Capture Holding Register 3 Low (TC3H)	R/W[5]

[1] Always read 0x0000.
[2] Only writable in special modes (test_mode = 1).
[3] Writes to these registers have no meaning or effect during input capture.
[4] May be written once when not in test00mode but writes are always permitted when test00mode is enabled.
[5] Writes have no effect.

7.3.2 Register Descriptions

This section consists of register descriptions in address order. Each description includes a standard register diagram with an associated figure number. Details of register bit and field function follow the register diagrams, in bit order.

Register Name		Bit 7	6	5	4	3	2	1	Bit 0
TIOS	R/W	IOS7	IOS6	IOS5	IOS4	IOS3	IOS2	IOS1	IOS0
CFORC	R	0	0	0	0	0	0	0	0
	W	FOC7	FOC6	FOC5	FOC4	FOC3	FOC2	FOC1	FOC0
OC7M	R/W	OC7M7	OC7M6	OC7M5	OC7M4	OC7M3	OC7M2	OC7M1	OC7M0
OC7D	R/W	OC7D7	OC7D6	OC7D5	OC7D4	OC7D3	OC7D2	OC7D1	OC7D0
TCNT (High)	R/W	TCNT15	TCNT14	TCNT13	TCNT12	TCNT11	TCNT10	TCNT9	TCNT8
TCNT (Low)	R/W	TCNT7	TCNT6	TCNT5	TCNT4	TCNT3	TCNT2	TCNT1	TCNT0
TSCR1	R	TEN	TSWAI	TSFRZ	TFFCA	PRNT	0	0	0
	W								
TTOF	R/W	TOV7	TOV6	TOV5	TOV4	TOV3	TOV2	TOV1	TOV0
TCTL1	R/W	OM7	OL7	OM6	OL6	OM5	OL5	OM4	OL4
TCTL2	R/W	OM3	OL3	OM2	OL2	OM1	OL1	OM0	OL0
TCTL3	R/W	EDG7B	EDG7A	EDG6B	EDG6A	EDG5B	EDG5A	EDG4B	EDG4A
TCTL4	R/W	EDG3B	EDG3A	EDG2B	EDG2A	EDG1B	EDG1A	EDG0B	EDG0A
TIE	R/W	C7I	C6I	C5I	C4I	C3I	C2I	C1I	C0I

= Unimplemented or Reserved

Figure 7-2. ECT Register Summary (Sheet 1 of 5)

Register Name		Bit 7	6	5	4	3	2	1	Bit 0
TSCR2	R	TOI	0	0	0	TCRE	PR2	PR1	PR0
	W								
TFLG1	R	C7F	C6F	C5F	C4F	C3F	C2F	C1F	C0F
	W								
TFLG2	R	TOF	0	0	0	0	0	0	0
	W								
TC0 (High)	R	Bit 15	Bit 14	Bit 13	Bit 12	Bit 11	Bit 10	Bit 9	Bit 8
	W								
TC0 (Low)	R	Bit 7	Bit 6	Bit 5	Bit 4	Bit 3	Bit 2	Bit 1	Bit 0
	W								
TC1 (High)	R	Bit 15	Bit 14	Bit 13	Bit 12	Bit 11	Bit 10	Bit 9	Bit 8
	W								
TC1 (Low)	R	Bit 7	Bit 6	Bit 5	Bit 4	Bit 3	Bit 2	Bit 1	Bit 0
	W								
TC2 (High)	R	Bit 15	Bit 14	Bit 13	Bit 12	Bit 11	Bit 10	Bit 9	Bit 8
	W								
TC2 (Low)	R	Bit 7	Bit 6	Bit 5	Bit 4	Bit 3	Bit 2	Bit 1	Bit 0
	W								
TC3 (High)	R	Bit 15	Bit 14	Bit 13	Bit 12	Bit 11	Bit 10	Bit 9	Bit 8
	W								
TC3 (Low)	R	Bit 7	Bit 6	Bit 5	Bit 4	Bit 3	Bit 2	Bit 1	Bit 0
	W								
TC4 (High)	R	Bit 15	Bit 14	Bit 13	Bit 12	Bit 11	Bit 10	Bit 9	Bit 8
	W								
TC4 (Low)	R	Bit 7	Bit 6	Bit 5	Bit 4	Bit 3	Bit 2	Bit 1	Bit 0
	W								
TC5 (High)	R	Bit 15	Bit 14	Bit 13	Bit 12	Bit 11	Bit 10	Bit 9	Bit 8
	W								
TC5 (Low)	R	Bit 7	Bit 6	Bit 5	Bit 4	Bit 3	Bit 2	Bit 1	Bit 0
	W								

= Unimplemented or Reserved

Figure 7-2. ECT Register Summary (Sheet 2 of 5)

Register Name		Bit 7	6	5	4	3	2	1	Bit 0
TC6 (High)	R/W	Bit 15	Bit 14	Bit 13	Bit 12	Bit 11	Bit 10	Bit 9	Bit 8
TC6 (Low)	R/W	Bit 7	Bit 6	Bit 5	Bit 4	Bit 3	Bit 2	Bit 1	Bit 0
TC7 (High)	R/W	Bit 15	Bit 14	Bit 13	Bit 12	Bit 11	Bit 10	Bit 9	Bit 8
TC7 (Low)	R/W	Bit 7	Bit 6	Bit 5	Bit 4	Bit 3	Bit 2	Bit 1	Bit 0
PACTL	R	0	PAEN	PAMOD	PEDGE	CLK1	CLK0	PA0VI	PAI
	W								
PAFLG	R	0	0	0	0	0	0	PA0VF	PAIF
	W								
PACN3	R/W	PACNT7(15)	PACNT6(14)	PACNT5(13)	PACNT4(12)	PACNT3(11)	PACNT2(10)	PACNT1(9)	PACNT0(8)
PACN2	R/W	PACNT7	PACNT6	PACNT5	PACNT4	PACNT3	PACNT2	PACNT1	PACNT0
PACN1	R/W	PACNT7(15)	PACNT6(14)	PACNT5(13)	PACNT4(12)	PACNT3(11)	PACNT2(10)	PACNT1(9)	PACNT0(8)
PACN0	R/W	PACNT7	PACNT6	PACNT5	PACNT4	PACNT3	PACNT2	PACNT1	PACNT0
MCCTL	R	MCZI	MODMC	RDMCL	0	0	MCEN	MCPR1	MCPR0
	W				ICLAT	FLMC			
MCFLG	R	MCZF	0	0	0	POLF3	POLF2	POLF1	POLF0
	W								
ICPAR	R	0	0	0	0	PA3EN	PA2EN	PA1EN	PA0EN
	W								
DLYCT	R/W	DLY7	DLY6	DLY5	DLY4	DLY3	DLY2	DLY1	DLY0
ICOVW	R/W	NOVW7	NOVW6	NOVW5	NOVW4	NOVW3	NOVW2	NOVW1	NOVW0

= Unimplemented or Reserved

Figure 7-2. ECT Register Summary (Sheet 3 of 5)

Register Name		Bit 7	6	5	4	3	2	1	Bit 0
ICSYS	R/W	SH37	SH26	SH15	SH04	TFMOD	PACMX	BUFEN	LATQ
Reserved	R/W	Reserved							
TIMTST	R/W	Timer Test Register							
PTPSR	R/W	PTPS7	PTPS6	PTPS5	PTPS4	PTPS3	PTPS2	PTPS1	PTPS0
PTMCPSR	R/W	PTMPS7	PTMPS6	PTMPS5	PTMPS4	PTMPS3	PTMPS2	PTMPS1	PTMPS0
PBCTL	R	0	PBEN	0	0	0	0	PBOVI	0
	W								
PBFLG	R	0	0	0	0	0	0	PBOVF	0
	W								
PA3H	R	PA3H7	PA3H6	PA3H5	PA3H4	PA3H3	PA3H2	PA3H1	PA3H0
	W								
PA2H	R	PA2H7	PA2H6	PA2H5	PA2H4	PA2H3	PA2H2	PA2H1	PA2H0
	W								
PA1H	R	PA1H7	PA1H6	PA1H5	PA1H4	PA1H3	PA1H2	PA1H1	PA1H0
	W								
PA0H	R	PA0H7	PA0H6	PA0H5	PA0H4	PA0H3	PA0H2	PA0H1	PA0H0
	W								
MCCNT (High)	R/W	MCCNT15	MCCNT14	MCCNT13	MCCNT12	MCCNT11	MCCNT10	MCCNT9	MCCNT8
MCCNT (Low)	R/W	MCCNT7	MCCNT6	MCCNT5	MCCNT4	MCCNT3	MCCNT2	MCCNT1	MCCNT9
TC0H (High)	R	TC15	TC14	TC13	TC12	TC11	TC10	TC9	TC8
	W								
TC0H (Low)	R	TC7	TC6	TC5	TC4	TC3	TC2	TC1	TC0

= Unimplemented or Reserved

Figure 7-2. ECT Register Summary (Sheet 4 of 5)

Register Name		Bit 7	6	5	4	3	2	1	Bit 0
TC1H (High)	R	TC15	TC14	TC13	TC12	TC11	TC10	TC9	TC8
	W								
TC1H (Low)	R	TC7	TC6	TC5	TC4	TC3	TC2	TC1	TC0
	W								
TC2H (High)	R	TC15	TC14	TC13	TC12	TC11	TC10	TC9	TC8
	W								
TC2H (Low)	R	TC7	TC6	TC5	TC4	TC3	TC2	TC1	TC0
	W								
TC3H (High)	R	TC15	TC14	TC13	TC12	TC11	TC10	TC9	TC8
	W								
TC3H (Low)	R	TC7	TC6	TC5	TC4	TC3	TC2	TC1	TC0
	W								

= Unimplemented or Reserved

Figure 7-2. ECT Register Summary (Sheet 5 of 5)

7.3.2.1 Timer Input Capture/Output Compare Select Register (TIOS)

	7	6	5	4	3	2	1	0
R/W	IOS7	IOS6	IOS5	IOS4	IOS3	IOS2	IOS1	IOS0
Reset	0	0	0	0	0	0	0	0

Figure 7-3. Timer Input Capture/Output Compare Register (TIOS)

Read or write: Anytime

All bits reset to zero.

Table 7-2. TIOS Field Descriptions

Field	Description
7:0 IOS[7:0]	**Input Capture or Output Compare Channel Configuration** 0 The corresponding channel acts as an input capture. 1 The corresponding channel acts as an output compare.

7.3.2.2 Timer Compare Force Register (CFORC)

	7	6	5	4	3	2	1	0
R	0	0	0	0	0	0	0	0
W	FOC7	FOC6	FOC5	FOC4	FOC3	FOC2	FOC1	FOC0
Reset	0	0	0	0	0	0	0	0

Figure 7-4. Timer Compare Force Register (CFORC)

Read or write: Anytime but reads will always return 0x0000 (1 state is transient).

All bits reset to zero.

Table 7-3. CFORC Field Descriptions

Field	Description
7:0 FOC[7:0]	**Force Output Compare Action for Channel 7:0** — A write to this register with the corresponding data bit(s) set causes the action which is programmed for output compare “x” to occur immediately. The action taken is the same as if a successful comparison had just taken place with the TCx register except the interrupt flag does not get set. **Note:** A successful channel 7 output compare overrides any channel 6:0 compares. If a forced output compare on any channel occurs at the same time as the successful output compare, then the forced output compare action will take precedence and the interrupt flag will not get set.

7.3.2.3 Output Compare 7 Mask Register (OC7M)

	7	6	5	4	3	2	1	0
R W	OC7M7	OC7M6	OC7M5	OC7M4	OC7M3	OC7M2	OC7M1	OC7M0
Reset	0	0	0	0	0	0	0	0

Figure 7-5. Output Compare 7 Mask Register (OC7M)

Read or write: Anytime

All bits reset to zero.

Table 7-4. OC7M Field Descriptions

Field	Description
7:0 OC7M[7:0]	**Output Compare Mask Action for Channel 7:0** 0 The corresponding OC7Dx bit in the output compare 7 data register will not be transferred to the timer port on a successful channel 7 output compare, even if the corresponding pin is setup for output compare. 1 The corresponding OC7Dx bit in the output compare 7 data register will be transferred to the timer port on a successful channel 7 output compare. **Note:** The corresponding channel must also be setup for output compare (IOSx = 1) for data to be transferred from the output compare 7 data register to the timer port.

7.3.2.4 Output Compare 7 Data Register (OC7D)

	7	6	5	4	3	2	1	0
R W	OC7D7	OC7D6	OC7D5	OC7D4	OC7D3	OC7D2	OC7D1	OC7D0
Reset	0	0	0	0	0	0	0	0

Figure 7-6. Output Compare 7 Data Register (OC7D)

Read or write: Anytime

All bits reset to zero.

Table 7-5. OC7D Field Descriptions

Field	Description
7:0 OC7D[7:0]	**Output Compare 7 Data Bits** — A channel 7 output compare can cause bits in the output compare 7 data register to transfer to the timer port data register depending on the output compare 7 mask register.

7.3.2.5 Timer Count Register (TCNT)

	15	14	13	12	11	10	9	8
R/W	TCNT15	TCNT14	TCNT13	TCNT12	TCNT11	TCNT10	TCNT9	TCNT8
Reset	0	0	0	0	0	0	0	0

Figure 7-7. Timer Count Register High (TCNT)

	7	6	5	4	3	2	1	0
R/W	TCNT7	TCNT6	TCNT5	TCNT4	TCNT3	TCNT2	TCNT1	TCNT0
Reset	0	0	0	0	0	0	0	0

Figure 7-8. Timer Count Register Low (TCNT)

Read: Anytime

Write: Has no meaning or effect

All bits reset to zero.

Table 7-6. TCNT Field Descriptions

Field	Description
15:0 TCNT[15:0]	**Timer Counter Bits** — The 16-bit main timer is an up counter. A read to this register will return the current value of the counter. Access to the counter register will take place in one clock cycle. **Note:** A separate read/write for high byte and low byte in test mode will give a different result than accessing them as a word. The period of the first count after a write to the TCNT registers may be a different size because the write is not synchronized with the prescaler clock.

7.3.2.6 Timer System Control Register 1 (TSCR1)

	7	6	5	4	3	2	1	0
R W	TEN	TSWAI	TSFRZ	TFFCA	PRNT	0	0	0
Reset	0	0	0	0	0	0	0	0

= Unimplemented or Reserved

Figure 7-9. Timer System Control Register 1 (TSCR1)

Read or write: Anytime except PRNT bit is write once

All bits reset to zero.

Table 7-7. TSCR1 Field Descriptions

Field	Description
7 TEN	**Timer Enable** 0 Disables the main timer, including the counter. Can be used for reducing power consumption. 1 Allows the timer to function normally. **Note:** If for any reason the timer is not active, there is no ÷64 clock for the pulse accumulator since the ÷64 is generated by the timer prescaler.
6 TSWAI	**Timer Module Stops While in Wait** 0 Allows the timer module to continue running during wait. 1 Disables the timer counter, pulse accumulators and modulus down counter when the MCU is in wait mode. Timer interrupts cannot be used to get the MCU out of wait.
5 TSFRZ	**Timer and Modulus Counter Stop While in Freeze Mode** 0 Allows the timer and modulus counter to continue running while in freeze mode. 1 Disables the timer and modulus counter whenever the MCU is in freeze mode. This is useful for emulation. The pulse accumulators do not stop in freeze mode.
4 TFFCA	**Timer Fast Flag Clear All** 0 Allows the timer flag clearing to function normally. 1 A read from an input capture or a write to the output compare channel registers causes the corresponding channel flag, CxF, to be cleared in the TFLG1 register. Any access to the TCNT register clears the TOF flag in the TFLG2 register. Any access to the PACN3 and PACN2 registers clears the PAOVF and PAIF flags in the PAFLG register. Any access to the PACN1 and PACN0 registers clears the PBOVF flag in the PBFLG register. Any access to the MCCNT register clears the MCZF flag in the MCFLG register. This has the advantage of eliminating software overhead in a separate clear sequence. Extra care is required to avoid accidental flag clearing due to unintended accesses. **Note:** The flags cannot be cleared via the normal flag clearing mechanism (writing a one to the flag) when TFFCA = 1.
3 PRNT	**Precision Timer** 0 Enables legacy timer. Only bits DLY0 and DLY1 of the DLYCT register are used for the delay selection of the delay counter. PR0, PR1, and PR2 bits of the TSCR2 register are used for timer counter prescaler selection. MCPR0 and MCPR1 bits of the MCCTL register are used for modulus down counter prescaler selection. 1 Enables precision timer. All bits in the DLYCT register are used for the delay selection, all bits of the PTPSR register are used for Precision Timer Prescaler Selection, and all bits of PTMCPSR register are used for the prescaler Precision Timer Modulus Counter Prescaler selection.

7.3.2.7 Timer Toggle On Overflow Register 1 (TTOV)

	7	6	5	4	3	2	1	0
R W	TOV7	TOV6	TOV5	TOV4	TOV3	TOV2	TOV1	TOV0
Reset	0	0	0	0	0	0	0	0

Figure 7-10. Timer Toggle On Overflow Register 1 (TTOV)

Read or write: Anytime

All bits reset to zero.

Table 7-8. TTOV Field Descriptions

Field	Description
7:0 TOV[7:0]	**Toggle On Overflow Bits** — TOV97:0] toggles output compare pin on timer counter overflow. This feature only takes effect when in output compare mode. When set, it takes precedence over forced output compare but not channel 7 override events. 0 Toggle output compare pin on overflow feature disabled. 1 Toggle output compare pin on overflow feature enabled.

7.3.2.8 Timer Control Register 1/Timer Control Register 2 (TCTL1/TCTL2)

	7	6	5	4	3	2	1	0
R W	OM7	OL7	OM6	OL6	OM5	OL5	OM4	OL4
Reset	0	0	0	0	0	0	0	0

Figure 7-11. Timer Control Register 1 (TCTL1)

	7	6	5	4	3	2	1	0
R W	OM3	OL3	OM2	OL2	OM1	OL1	OM0	OL0
Reset	0	0	0	0	0	0	0	0

Figure 7-12. Timer Control Register 2 (TCTL2)

Read or write: Anytime

All bits reset to zero.

Table 7-9. TCTL1/TCTL2 Field Descriptions

Field	Description
OM[7:0] 7, 5, 3, 1	OMx — Output Mode OLx — Output Level These eight pairs of control bits are encoded to specify the output action to be taken as a result of a successful OCx compare. When either OMx or OLx is one, the pin associated with OCx becomes an output tied to OCx. See Table 7-10.
OL[7:0] 6, 4, 2, 0	

Table 7-10. Compare Result Output Action

OMx	OLx	Action
0	0	Timer disconnected from output pin logic
0	1	Toggle OCx output line
1	0	Clear OCx output line to zero
1	1	Set OCx output line to one

NOTE

To enable output action by OMx and OLx bits on timer port, the corresponding bit in OC7M should be cleared.

7.3.2.9 Timer Control Register 3/Timer Control Register 4 (TCTL3/TCTL4)

	7	6	5	4	3	2	1	0
R W	EDG7B	EDG7A	EDG6B	EDG6A	EDG5B	EDG5A	EDG4B	EDG4A
Reset	0	0	0	0	0	0	0	0

Figure 7-13. Timer Control Register 3 (TCTL3)

	7	6	5	4	3	2	1	0
R W	EDG3B	EDG3A	EDG2B	EDG2A	EDG1B	EDG1A	EDG0B	EDG0A
Reset	0	0	0	0	0	0	0	0

Figure 7-14. Timer Control Register 4 (TCTL4)

Read or write: Anytime

All bits reset to zero.

Table 7-11. TCTL3/TCTL4 Field Descriptions

Field	Description
EDG[7:0]B 7, 5, 3, 1	**Input Capture Edge Control** — These eight pairs of control bits configure the input capture edge detector circuits for each input capture channel. The four pairs of control bits in TCTL4 also configure the input capture edge control for the four 8-bit pulse accumulators PAC0–PAC3.EDG0B and EDG0A in TCTL4 also determine the active edge for the 16-bit pulse accumulator PACB. See Table 7-12.
EDG[7:0]A 6, 4, 2, 0	

Table 7-12. Edge Detector Circuit Configuration

EDGxB	EDGxA	Configuration
0	0	Capture disabled
0	1	Capture on rising edges only
1	0	Capture on falling edges only
1	1	Capture on any edge (rising or falling)

7.3.2.10 Timer Interrupt Enable Register (TIE)

	7	6	5	4	3	2	1	0
R W	C7I	C6I	C5I	C4I	C3I	C2I	C1I	C0I
Reset	0	0	0	0	0	0	0	0

Figure 7-15. Timer Interrupt Enable Register (TIE)

Read or write: Anytime

All bits reset to zero.

The bits C7I–C0I correspond bit-for-bit with the flags in the TFLG1 status register.

Table 7-13. TIE Field Descriptions

Field	Description
7:0 C[7:0]I	**Input Capture/Output Compare “x” Interrupt Enable** 0 The corresponding flag is disabled from causing a hardware interrupt. 1 The corresponding flag is enabled to cause an interrupt.

7.3.2.11 Timer System Control Register 2 (TSCR2)

	7	6	5	4	3	2	1	0
R	TOI	0	0	0	TCRE	PR2	PR1	PR0
W								
Reset	0	0	0	0	0	0	0	0

= Unimplemented or Reserved

Figure 7-16. Timer System Control Register 2 (TSCR2)

Read or write: Anytime

All bits reset to zero.

Table 7-14. TSCR2 Field Descriptions

Field	Description
7 TOI	**Timer Overflow Interrupt Enable** 0 Timer overflow interrupt disabled. 1 Hardware interrupt requested when TOF flag set.
3 TCRE	**Timer Counter Reset Enable** — This bit allows the timer counter to be reset by a successful channel 7 output compare. This mode of operation is similar to an up-counting modulus counter. 0 Counter reset disabled and counter free runs. 1 Counter reset by a successful output compare on channel 7. **Note:** If register TC7 = 0x0000 and TCRE = 1, then the TCNT register will stay at 0x0000 continuously. If register TC7 = 0xFFFF and TCRE = 1, the TOF flag will never be set when TCNT is reset from 0xFFFF to 0x0000.
2:0 PR[2:0]	**Timer Prescaler Select** — These three bits specify the division rate of the main Timer prescaler when the PRNT bit of register TSCR1 is set to 0. The newly selected prescale factor will not take effect until the next synchronized edge where all prescale counter stages equal zero. See Table 7-15.

Table 7-15. Prescaler Selection

PR2	PR1	PR0	Prescale Factor
0	0	0	1
0	0	1	2
0	1	0	4
0	1	1	8
1	0	0	16
1	0	1	32
1	1	0	64
1	1	1	128

7.3.2.12 Main Timer Interrupt Flag 1 (TFLG1)

	7	6	5	4	3	2	1	0
R W	C7F	C6F	C5F	C4F	C3F	C2F	C1F	C0F
Reset	0	0	0	0	0	0	0	0

Figure 7-17. Main Timer Interrupt Flag 1 (TFLG1)

Read: Anytime

Write used in the flag clearing mechanism. Writing a one to the flag clears the flag. Writing a zero will not affect the current status of the bit.

NOTE

When TFFCA = 1, the flags cannot be cleared via the normal flag clearing mechanism (writing a one to the flag). Reference Section 7.3.2.6, “Timer System Control Register 1 (TSCR1)”.

All bits reset to zero.

TFLG1 indicates when interrupt conditions have occurred. The flags can be cleared via the normal flag clearing mechanism (writing a one to the flag) or via the fast flag clearing mechanism (reference TFFCA bit in Section 7.3.2.6, “Timer System Control Register 1 (TSCR1)”).

Use of the TFMOD bit in the ICSYS register in conjunction with the use of the ICOVW register allows a timer interrupt to be generated after capturing two values in the capture and holding registers, instead of generating an interrupt for every capture.

Table 7-16. TFLG1 Field Descriptions

Field	Description
7:0 C[7:0]F	**Input Capture/Output Compare Channel “x” Flag** — A CxF flag is set when a corresponding input capture or output compare is detected. C0F can also be set by 16-bit Pulse Accumulator B (PACB). C3F–C0F can also be set by 8-bit pulse accumulators PAC3–PAC0. If the delay counter is enabled, the CxF flag will not be set until after the delay.

7.3.2.13 Main Timer Interrupt Flag 2 (TFLG2)

	7	6	5	4	3	2	1	0
R	TOF	0	0	0	0	0	0	0
W								
Reset	0	0	0	0	0	0	0	0

= Unimplemented or Reserved

Figure 7-18. Main Timer Interrupt Flag 2 (TFLG2)

Read: Anytime

Write used in the flag clearing mechanism. Writing a one to the flag clears the flag. Writing a zero will not affect the current status of the bit.

NOTE

When TFFCA = 1, the flag cannot be cleared via the normal flag clearing mechanism (writing a one to the flag). Reference Section 7.3.2.6, “Timer System Control Register 1 (TSCR1)”.

All bits reset to zero.

TFLG2 indicates when interrupt conditions have occurred. The flag can be cleared via the normal flag clearing mechanism (writing a one to the flag) or via the fast flag clearing mechanism (Reference TFFCA bit in Section 7.3.2.6, “Timer System Control Register 1 (TSCR1)”).

Table 7-17. TFLG2 Field Descriptions

Field	Description
7 TOF	**Timer Overflow Flag** — Set when 16-bit free-running timer overflows from 0xFFFF to 0x0000.

7.3.2.14 Timer Input Capture/Output Compare Registers 0–7

	15	14	13	12	11	10	9	8
R/W	Bit 15	Bit 14	Bit 13	Bit 12	Bit 11	Bit 10	Bit 9	Bit 8
Reset	0	0	0	0	0	0	0	0

Figure 7-19. Timer Input Capture/Output Compare Register 0 High (TC0)

	7	6	5	4	3	2	1	0
R/W	Bit 7	Bit 6	Bit 5	Bit 4	Bit 3	Bit 2	Bit 1	Bit 0
Reset	0	0	0	0	0	0	0	0

Figure 7-20. Timer Input Capture/Output Compare Register 0 Low (TC0)

	15	14	13	12	11	10	9	8
R/W	Bit 15	Bit 14	Bit 13	Bit 12	Bit 11	Bit 10	Bit 9	Bit 8
Reset	0	0	0	0	0	0	0	0

Figure 7-21. Timer Input Capture/Output Compare Register 1 High (TC1)

	7	6	5	4	3	2	1	0
R/W	Bit 7	Bit 6	Bit 5	Bit 4	Bit 3	Bit 2	Bit 1	Bit 0
Reset	0	0	0	0	0	0	0	0

Figure 7-22. Timer Input Capture/Output Compare Register 1 Low (TC1)

	15	14	13	12	11	10	9	8
R/W	Bit 15	Bit 14	Bit 13	Bit 12	Bit 11	Bit 10	Bit 9	Bit 8
Reset	0	0	0	0	0	0	0	0

Figure 7-23. Timer Input Capture/Output Compare Register 2 High (TC2)

	7	6	5	4	3	2	1	0
R/W	Bit 7	Bit 6	Bit 5	Bit 4	Bit 3	Bit 2	Bit 1	Bit 0
Reset	0	0	0	0	0	0	0	0

Figure 7-24. Timer Input Capture/Output Compare Register 2 Low (TC2)

	15	14	13	12	11	10	9	8
R/W	Bit 15	Bit 14	Bit 13	Bit 12	Bit 11	Bit 10	Bit 9	Bit 8
Reset	0	0	0	0	0	0	0	0

Figure 7-25. Timer Input Capture/Output Compare Register 3 High (TC3)

	7	6	5	4	3	2	1	0
R/W	Bit 7	Bit 6	Bit 5	Bit 4	Bit 3	Bit 2	Bit 1	Bit 0
Reset	0	0	0	0	0	0	0	0

Figure 7-26. Timer Input Capture/Output Compare Register 3 Low (TC3)

	15	14	13	12	11	10	9	8
R/W	Bit 15	Bit 14	Bit 13	Bit 12	Bit 11	Bit 10	Bit 9	Bit 8
Reset	0	0	0	0	0	0	0	0

Figure 7-27. Timer Input Capture/Output Compare Register 4 High (TC4)

	7	6	5	4	3	2	1	0
R/W	Bit 7	Bit 6	Bit 5	Bit 4	Bit 3	Bit 2	Bit 1	Bit 0
Reset	0	0	0	0	0	0	0	0

Figure 7-28. Timer Input Capture/Output Compare Register 4 Low (TC4)

	15	14	13	12	11	10	9	8
R/W	Bit 15	Bit 14	Bit 13	Bit 12	Bit 11	Bit 10	Bit 9	Bit 8
Reset	0	0	0	0	0	0	0	0

Figure 7-29. Timer Input Capture/Output Compare Register 5 High (TC5)

	7	6	5	4	3	2	1	0
R/W	Bit 7	Bit 6	Bit 5	Bit 4	Bit 3	Bit 2	Bit 1	Bit 0
Reset	0	0	0	0	0	0	0	0

Figure 7-30. Timer Input Capture/Output Compare Register 5 Low (TC5)

	15	14	13	12	11	10	9	8
R/W	Bit 15	Bit 14	Bit 13	Bit 12	Bit 11	Bit 10	Bit 9	Bit 8
Reset	0	0	0	0	0	0	0	0

Figure 7-31. Timer Input Capture/Output Compare Register 6 High (TC6)

	7	6	5	4	3	2	1	0
R/W	Bit 7	Bit 6	Bit 5	Bit 4	Bit 3	Bit 2	Bit 1	Bit 0
Reset	0	0	0	0	0	0	0	0

Figure 7-32. Timer Input Capture/Output Compare Register 6 Low (TC6)

	15	14	13	12	11	10	9	8
R/W	Bit 15	Bit 14	Bit 13	Bit 12	Bit 11	Bit 10	Bit 9	Bit 8
Reset	0	0	0	0	0	0	0	0

Figure 7-33. Timer Input Capture/Output Compare Register 7 High (TC7)

	7	6	5	4	3	2	1	0
R/W	Bit 7	Bit 6	Bit 5	Bit 4	Bit 3	Bit 2	Bit 1	Bit 0
Reset	0	0	0	0	0	0	0	0

Figure 7-34. Timer Input Capture/Output Compare Register 7 Low (TC7)

Read: Anytime

Write anytime for output compare function. Writes to these registers have no meaning or effect during input capture.

All bits reset to zero.

Depending on the TIOS bit for the corresponding channel, these registers are used to latch the value of the free-running counter when a defined transition is sensed by the corresponding input capture edge detector or to trigger an output action for output compare.

7.3.2.15 16-Bit Pulse Accumulator A Control Register (PACTL)

	7	6	5	4	3	2	1	0
R	0	PAEN	PAMOD	PEDGE	CLK1	CLK0	PAOVI	PAI
W								
Reset	0	0	0	0	0	0	0	0

= Unimplemented or Reserved

Figure 7-35. 16-Bit Pulse Accumulator Control Register (PACTL)

Read: Anytime

Write: Anytime

All bits reset to zero.

Table 7-18. PACTL Field Descriptions

Field	Description
6 PAEN	**Pulse Accumulator A System Enable** — PAEN is independent from TEN. With timer disabled, the pulse accumulator can still function unless pulse accumulator is disabled. 0 16-Bit Pulse Accumulator A system disabled. 8-bit PAC3 and PAC2 can be enabled when their related enable bits in ICPAR are set. Pulse Accumulator Input Edge Flag (PAIF) function is disabled. 1 16-Bit Pulse Accumulator A system enabled. The two 8-bit pulse accumulators PAC3 and PAC2 are cascaded to form the PACA 16-bit pulse accumulator. When PACA in enabled, the PACN3 and PACN2 registers contents are respectively the high and low byte of the PACA. PA3EN and PA2EN control bits in ICPAR have no effect. Pulse Accumulator Input Edge Flag (PAIF) function is enabled. The PACA shares the input pin with IC7.

Table 7-18. PACTL Field Descriptions (continued)

Field	Description
5 PAMOD	**Pulse Accumulator Mode** — This bit is active only when the Pulse Accumulator A is enabled (PAEN = 1). 0 Event counter mode 1 Gated time accumulation mode
4 PEDGE	**Pulse Accumulator Edge Control** — This bit is active only when the Pulse Accumulator A is enabled (PAEN = 1). Refer to Table 7-19. For PAMOD bit = 0 (event counter mode). 0 Falling edges on PT7 pin cause the count to be incremented 1 Rising edges on PT7 pin cause the count to be incremented For PAMOD bit = 1 (gated time accumulation mode). 0 PT7 input pin high enables bus clock divided by 64 to Pulse Accumulator and the trailing falling edge on PT7 sets the PAIF flag. 1 PT7 input pin low enables bus clock divided by 64 to Pulse Accumulator and the trailing rising edge on PT7 sets the PAIF flag. If the timer is not active (TEN = 0 in TSCR1), there is no divide-by-64 since the ÷64 clock is generated by the timer prescaler.
3:2 CLK[1:0]	**Clock Select Bits** — For the description of PACLK please refer to Figure 7-70. If the pulse accumulator is disabled (PAEN = 0), the prescaler clock from the timer is always used as an input clock to the timer counter. The change from one selected clock to the other happens immediately after these bits are written. Refer to Table 7-20.
2 PAOVI	**Pulse Accumulator A Overflow Interrupt Enable** 0 Interrupt inhibited 1 Interrupt requested if PAOVF is set
0 PAI	**Pulse Accumulator Input Interrupt Enable** 0 Interrupt inhibited 1 Interrupt requested if PAIF is set

Table 7-19. Pin Action

PAMOD	PEDGE	Pin Action
0	0	Falling edge
0	1	Rising edge
1	0	Divide by 64 clock enabled with pin high level
1	1	Divide by 64 clock enabled with pin low level

Table 7-20. Clock Selection

CLK1	CLK0	Clock Source
0	0	Use timer prescaler clock as timer counter clock
0	1	Use PACLK as input to timer counter clock
1	0	Use PACLK/256 as timer counter clock frequency
1	1	Use PACLK/65536 as timer counter clock frequency

7.3.2.16 Pulse Accumulator A Flag Register (PAFLG)

	7	6	5	4	3	2	1	0
R	0	0	0	0	0	0	PAOVF	PAIF
W								
Reset	0	0	0	0	0	0	0	0

= Unimplemented or Reserved

Figure 7-36. Pulse Accumulator A Flag Register (PAFLG)

Read: Anytime

Write used in the flag clearing mechanism. Writing a one to the flag clears the flag. Writing a zero will not affect the current status of the bit.

NOTE

When TFFCA = 1, the flags cannot be cleared via the normal flag clearing mechanism (writing a one to the flag). Reference Section 7.3.2.6, “Timer System Control Register 1 (TSCR1)”.

All bits reset to zero.

PAFLG indicates when interrupt conditions have occurred. The flags can be cleared via the normal flag clearing mechanism (writing a one to the flag) or via the fast flag clearing mechanism (Reference TFFCA bit in Section 7.3.2.6, “Timer System Control Register 1 (TSCR1)”).

Table 7-21. PAFLG Field Descriptions

Field	Description
1 PAOVF	**Pulse Accumulator A Overflow Flag** — Set when the 16-bit pulse accumulator A overflows from 0xFFFF to 0x0000, or when 8-bit pulse accumulator 3 (PAC3) overflows from 0x00FF to 0x0000. When PACMX = 1, PAOVF bit can also be set if 8-bit pulse accumulator 3 (PAC3) reaches 0x00FF followed by an active edge on PT3.
0 PAIF	**Pulse Accumulator Input edge Flag** — Set when the selected edge is detected at the PT7 input pin. In event mode the event edge triggers PAIF and in gated time accumulation mode the trailing edge of the gate signal at the PT7 input pin triggers PAIF.

7.3.2.17 Pulse Accumulators Count Registers (PACN3 and PACN2)

	7	6	5	4	3	2	1	0
R W	PACNT7(15)	PACNT6(14)	PACNT5(13)	PACNT4(12)	PACNT3(11)	PACNT2(10)	PACNT1(9)	PACNT0(8)
Reset	0	0	0	0	0	0	0	0

Figure 7-37. Pulse Accumulators Count Register 3 (PACN3)

	7	6	5	4	3	2	1	0
R/W	PACNT7	PACNT6	PACNT5	PACNT4	PACNT3	PACNT2	PACNT1	PACNT0
Reset	0	0	0	0	0	0	0	0

Figure 7-38. Pulse Accumulators Count Register 2 (PACN2)

Read: Anytime

Write: Anytime

All bits reset to zero.

The two 8-bit pulse accumulators PAC3 and PAC2 are cascaded to form the PACA 16-bit pulse accumulator. When PACA in enabled (PAEN = 1 in PACTL), the PACN3 and PACN2 registers contents are respectively the high and low byte of the PACA.

When PACN3 overflows from 0x00FF to 0x0000, the interrupt flag PAOVF in PAFLG is set.

Full count register access will take place in one clock cycle.

NOTE

A separate read/write for high byte and low byte will give a different result than accessing them as a word.

When clocking pulse and write to the registers occurs simultaneously, write takes priority and the register is not incremented.

7.3.2.18 Pulse Accumulators Count Registers (PACN1 and PACN0)

	7	6	5	4	3	2	1	0
R/W	PACNT7(15)	PACNT6(14)	PACNT5(13)	PACNT4(12)	PACNT3(11)	PACNT2(10)	PACNT1(9)	PACNT0(8)
Reset	0	0	0	0	0	0	0	0

Figure 7-39. Pulse Accumulators Count Register 1 (PACN1)

	7	6	5	4	3	2	1	0
R/W	PACNT7	PACNT6	PACNT5	PACNT4	PACNT3	PACNT2	PACNT1	PACNT0
Reset	0	0	0	0	0	0	0	0

Figure 7-40. Pulse Accumulators Count Register 0 (PACN0)

Read: Anytime

Write: Anytime

All bits reset to zero.

The two 8-bit pulse accumulators PAC1 and PAC0 are cascaded to form the PACB 16-bit pulse accumulator. When PACB in enabled, (PBEN = 1 in PBCTL) the PACN1 and PACN0 registers contents are respectively the high and low byte of the PACB.

When PACN1 overflows from 0x00FF to 0x0000, the interrupt flag PBOVF in PBFLG is set.

Full count register access will take place in one clock cycle.

NOTE

A separate read/write for high byte and low byte will give a different result than accessing them as a word.

When clocking pulse and write to the registers occurs simultaneously, write takes priority and the register is not incremented.

7.3.2.19 16-Bit Modulus Down-Counter Control Register (MCCTL)

	7	6	5	4	3	2	1	0
R	MCZI	MODMC	RDMCL	0	0	MCEN	MCPR1	MCPR0
W				ICLAT	FLMC			
Reset	0	0	0	0	0	0	0	0

Figure 7-41. 16-Bit Modulus Down-Counter Control Register (MCCTL)

Read: Anytime

Write: Anytime

All bits reset to zero.

Table 7-22. MCCTL Field Descriptions

Field	Description
7 MCZI	**Modulus Counter Underflow Interrupt Enable** 0 Modulus counter interrupt is disabled. 1 Modulus counter interrupt is enabled.
6 MODMC	**Modulus Mode Enable** 0 The modulus counter counts down from the value written to it and will stop at 0x0000. 1 Modulus mode is enabled. When the modulus counter reaches 0x0000, the counter is loaded with the latest value written to the modulus count register. **Note:** For proper operation, the MCEN bit should be cleared before modifying the MODMC bit in order to reset the modulus counter to 0xFFFF.
5 RDMCL	**Read Modulus Down-Counter Load** 0 Reads of the modulus count register (MCCNT) will return the present value of the count register. 1 Reads of the modulus count register (MCCNT) will return the contents of the load register.
4 ICLAT	**Input Capture Force Latch Action** — When input capture latch mode is enabled (LATQ and BUFEN bit in ICSYS are set), a write one to this bit immediately forces the contents of the input capture registers TC0 to TC3 and their corresponding 8-bit pulse accumulators to be latched into the associated holding registers. The pulse accumulators will be automatically cleared when the latch action occurs. Writing zero to this bit has no effect. Read of this bit will always return zero.
3 FLMC	**Force Load Register into the Modulus Counter Count Register** — This bit is active only when the modulus down-counter is enabled (MCEN = 1). A write one into this bit loads the load register into the modulus counter count register (MCCNT). This also resets the modulus counter prescaler. Write zero to this bit has no effect. Read of this bit will return always zero.
2 MCEN	**Modulus Down-Counter Enable** 0 Modulus counter disabled. The modulus counter (MCCNT) is preset to 0xFFFF. This will prevent an early interrupt flag when the modulus down-counter is enabled. 1 Modulus counter is enabled.
1:0 MCPR[1:0]	**Modulus Counter Prescaler Select** — These two bits specify the division rate of the modulus counter prescaler when PRNT of TSCR1 is set to 0. The newly selected prescaler division rate will not be effective until a load of the load register into the modulus counter count register occurs.

Table 7-23. Modulus Counter Prescaler Select

MCPR1	MCPR0	Prescaler Division
0	0	1
0	1	4
1	0	8
1	1	16

7.3.2.20 16-Bit Modulus Down-Counter FLAG Register (MCFLG)

	7	6	5	4	3	2	1	0
R	MCZF	0	0	0	POLF3	POLF2	POLF1	POLF0
W								
Reset	0	0	0	0	0	0	0	0

= Unimplemented or Reserved

Figure 7-42. 16-Bit Modulus Down-Counter FLAG Register (MCFLG)

Read: Anytime

Write only used in the flag clearing mechanism for bit 7. Writing a one to bit 7 clears the flag. Writing a zero will not affect the current status of the bit.

NOTE

When TFFCA = 1, the flag cannot be cleared via the normal flag clearing mechanism (writing a one to the flag). Reference Section 7.3.2.6, “Timer System Control Register 1 (TSCR1)”.

All bits reset to zero.

Table 7-24. MCFLG Field Descriptions

Field	Description
7 MCZF	**Modulus Counter Underflow Flag** — The flag is set when the modulus down-counter reaches 0x0000. The flag indicates when interrupt conditions have occurred. The flag can be cleared via the normal flag clearing mechanism (writing a one to the flag) or via the fast flag clearing mechanism (Reference TFFCA bit in Section 7.3.2.6, “Timer System Control Register 1 (TSCR1)”).
3:0 POLF[3:0]	**First Input Capture Polarity Status** — These are read only bits. Writes to these bits have no effect. Each status bit gives the polarity of the first edge which has caused an input capture to occur after capture latch has been read. Each POLFx corresponds to a timer PORTx input. 0 The first input capture has been caused by a falling edge. 1 The first input capture has been caused by a rising edge.

7.3.2.21 ICPAR — Input Control Pulse Accumulators Register (ICPAR)

	7	6	5	4	3	2	1	0
R	0	0	0	0	PA3EN	PA2EN	PA1EN	PA0EN
W								
Reset	0	0	0	0	0	0	0	0

= Unimplemented or Reserved

Figure 7-43. Input Control Pulse Accumulators Register (ICPAR)

Read: Anytime

Write: Anytime.

All bits reset to zero.

The 8-bit pulse accumulators PAC3 and PAC2 can be enabled only if PAEN in PACTL is cleared. If PAEN is set, PA3EN and PA2EN have no effect.

The 8-bit pulse accumulators PAC1 and PAC0 can be enabled only if PBEN in PBCTL is cleared. If PBEN is set, PA1EN and PA0EN have no effect.

Table 7-25. ICPAR Field Descriptions

Field	Description
3:0 PA[3:0]EN	**8-Bit Pulse Accumulator ‘x’ Enable** 0 8-Bit Pulse Accumulator is disabled. 1 8-Bit Pulse Accumulator is enabled.

7.3.2.22 Delay Counter Control Register (DLYCT)

	7	6	5	4	3	2	1	0
R W	DLY7	DLY6	DLY5	DLY4	DLY3	DLY2	DLY1	DLY0
Reset	0	0	0	0	0	0	0	0

Figure 7-44. Delay Counter Control Register (DLYCT)

Read: Anytime

Write: Anytime

All bits reset to zero.

Table 7-26. DLYCT Field Descriptions

Field	Description
7:0 DLY[7:0]	**Delay Counter Select** — When the PRNT bit of TSCR1 register is set to 0, only bits DLY0, DLY1 are used to calculate the delay.Table 7-27 shows the delay settings in this case. When the PRNT bit of TSCR1 register is set to 1, all bits are used to set a more precise delay. Table 7-28 shows the delay settings in this case. After detection of a valid edge on an input capture pin, the delay counter counts the pre-selected number of [(dly_cnt + 1)*4]bus clock cycles, then it will generate a pulse on its output if the level of input signal, after the preset delay, is the opposite of the level before the transition.This will avoid reaction to narrow input pulses. Delay between two active edges of the input signal period should be longer than the selected counter delay. **Note:** It is recommended to not write to this register while the timer is enabled, that is when TEN is set in register TSCR1.

Table 7-27. Delay Counter Select when PRNT = 0

DLY1	DLY0	Delay
0	0	Disabled
0	1	256 bus clock cycles
1	0	512 bus clock cycles
1	1	1024 bus clock cycles

Table 7-28. Delay Counter Select Examples when PRNT = 1

DLY7	DLY6	DLY5	DLY4	DLY3	DLY2	DLY1	DLY0	Delay
0	0	0	0	0	0	0	0	Disabled (bypassed)
0	0	0	0	0	0	0	1	8 bus clock cycles
0	0	0	0	0	0	1	0	12 bus clock cycles
0	0	0	0	0	0	1	1	16 bus clock cycles
0	0	0	0	0	1	0	0	20 bus clock cycles
0	0	0	0	0	1	0	1	24 bus clock cycles
0	0	0	0	0	1	1	0	28 bus clock cycles
0	0	0	0	0	1	1	1	32 bus clock cycles
0	0	0	0	1	1	1	1	64 bus clock cycles
0	0	0	1	1	1	1	1	128 bus clock cycles
0	0	1	1	1	1	1	1	256 bus clock cycles
0	1	1	1	1	1	1	1	512 bus clock cycles
1	1	1	1	1	1	1	1	1024 bus clock cycles

7.3.2.23 Input Control Overwrite Register (ICOVW)

	7	6	5	4	3	2	1	0
R W	NOVW7	NOVW6	NOVW5	NOVW4	NOVW3	NOVW2	NOVW1	NOVW0
Reset	0	0	0	0	0	0	0	0

Figure 7-45. Input Control Overwrite Register (ICOVW)

Read: Anytime

Write: Anytime

All bits reset to zero.

Table 7-29. ICOVW Field Descriptions

Field	Description
7:0 NOVW[7:0]	**No Input Capture Overwrite** 0 The contents of the related capture register or holding register can be overwritten when a new input capture or latch occurs. 1 The related capture register or holding register cannot be written by an event unless they are empty (see Section 7.4.1.1, “IC Channels”). This will prevent the captured value being overwritten until it is read or latched in the holding register.

7.3.2.24 Input Control System Control Register (ICSYS)

	7	6	5	4	3	2	1	0
R W	SH37	SH26	SH15	SH04	TFMOD	PACMX	BUFEN	LATQ
Reset	0	0	0	0	0	0	0	0

Figure 7-46. Input Control System Register (ICSYS)

Read: Anytime

Write: Once in normal modes

All bits reset to zero.

Table 7-30. ICSYS Field Descriptions

Field	Description
7:4 SHxy	**Share Input action of Input Capture Channels x and y** 0 Normal operation 1 The channel input ‘x’ causes the same action on the channel ‘y’. The port pin ‘x’ and the corresponding edge detector is used to be active on the channel ‘y’.
3 TFMOD	**Timer Flag Setting Mode** — Use of the TFMOD bit in conjunction with the use of the ICOVW register allows a timer interrupt to be generated after capturing two values in the capture and holding registers instead of generating an interrupt for every capture. By setting TFMOD in queue mode, when NOVWx bit is set and the corresponding capture and holding registers are emptied, an input capture event will first update the related input capture register with the main timer contents. At the next event, the TCx data is transferred to the TCxH register, the TCx is updated and the CxF interrupt flag is set. In all other input capture cases the interrupt flag is set by a valid external event on PTx. 0 The timer flags C3F–C0F in TFLG1 are set when a valid input capture transition on the corresponding port pin occurs. 1 If in queue mode (BUFEN = 1 and LATQ = 0), the timer flags C3F–C0F in TFLG1 are set only when a latch on the corresponding holding register occurs. If the queue mode is not engaged, the timer flags C3F–C0F are set the same way as for TFMOD = 0.
2 PACMX	**8-Bit Pulse Accumulators Maximum Count** 0 Normal operation. When the 8-bit pulse accumulator has reached the value 0x00FF, with the next active edge, it will be incremented to 0x0000. 1 When the 8-bit pulse accumulator has reached the value 0x00FF, it will not be incremented further. The value 0x00FF indicates a count of 255 or more.
1 BUFFEN	**IC Buffer Enable** 0 Input capture and pulse accumulator holding registers are disabled. 1 Input capture and pulse accumulator holding registers are enabled. The latching mode is defined by LATQ control bit.

Table 7-30. ICSYS Field Descriptions (continued)

Field	Description
0 LATQ	**Input Control Latch or Queue Mode Enable** — The BUFEN control bit should be set in order to enable the IC and pulse accumulators holding registers. Otherwise LATQ latching modes are disabled. Write one into ICLAT bit in MCCTL, when LATQ and BUFEN are set will produce latching of input capture and pulse accumulators registers into their holding registers. 0 Queue mode of Input Capture is enabled. The main timer value is memorized in the IC register by a valid input pin transition. With a new occurrence of a capture, the value of the IC register will be transferred to its holding register and the IC register memorizes the new timer value. 1 Latch mode is enabled. Latching function occurs when modulus down-counter reaches zero or a zero is written into the count register MCCNT (see Section 7.4.1.1.2, “Buffered IC Channels”). With a latching event the contents of IC registers and 8-bit pulse accumulators are transferred to their holding registers. 8-bit pulse accumulators are cleared.

7.3.2.25 Precision Timer Prescaler Select Register (PTPSR)

	7	6	5	4	3	2	1	0
R W	PTPS7	PTPS6	PTPS5	PTPS4	PTPS3	PTPS2	PTPS1	PTPS0
Reset	0	0	0	0	0	0	0	0

Figure 7-47. Precision Timer Prescaler Select Register (PTPSR)

Read: Anytime

Write: Anytime

All bits reset to zero.

Table 7-31. PTPSR Field Descriptions

Field	Description
7:0 PTPS[7:0]	**Precision Timer Prescaler Select Bits** — These eight bits specify the division rate of the main Timer prescaler. These are effective only when the PRNT bit of TSCR1 is set to 1. Table 7-32 shows some selection examples in this case. The newly selected prescale factor will not take effect until the next synchronized edge where all prescale counter stages equal zero.

Table 7-32. Precision Timer Prescaler Selection Examples when PRNT = 1

PTPS7	PTPS6	PTPS5	PTPS4	PTPS3	PTPS2	PTPS1	PTPS0	Prescale Factor
0	0	0	0	0	0	0	0	1
0	0	0	0	0	0	0	1	2
0	0	0	0	0	0	1	0	3
0	0	0	0	0	0	1	1	4
0	0	0	0	0	1	0	0	5
0	0	0	0	0	1	0	1	6
0	0	0	0	0	1	1	0	7

Table 7-32. Precision Timer Prescaler Selection Examples when PRNT = 1

PTPS7	PTPS6	PTPS5	PTPS4	PTPS3	PTPS2	PTPS1	PTPS0	Prescale Factor
0	0	0	0	0	1	1	1	8
0	0	0	0	1	1	1	1	16
0	0	0	1	1	1	1	1	32
0	0	1	1	1	1	1	1	64
0	1	1	1	1	1	1	1	128
1	1	1	1	1	1	1	1	256

7.3.2.26 Precision Timer Modulus Counter Prescaler Select Register (PTMCPSR)

	7	6	5	4	3	2	1	0
R W	PTMPS7	PTMPS6	PTMPS5	PTMPS4	PTMPS3	PTMPS2	PTMPS1	PTMPS0
Reset	0	0	0	0	0	0	0	0

Figure 7-48. Precision Timer Modulus Counter Prescaler Select Register (PTMCPSR)

Read: Anytime

Write: Anytime

All bits reset to zero.

Table 7-33. PTMCPSR Field Descriptions

Field	Description
7:0 PTMPS[7:0]	**Precision Timer Modulus Counter Prescaler Select Bits** — These eight bits specify the division rate of the modulus counter prescaler. These are effective only when the PRNT bit of TSCR1 is set to 1. Table 7-34 shows some possible division rates. The newly selected prescaler division rate will not be effective until a load of the load register into the modulus counter count register occurs.

Table 7-34. Precision Timer Modulus Counter Prescaler Select Examples when PRNT = 1

PTMPS7	PTMPS6	PTMPS5	PTMPS4	PTMPS3	PTMPS2	PTMPS1	PTMPS0	Prescaler Division Rate
0	0	0	0	0	0	0	0	1
0	0	0	0	0	0	0	1	2
0	0	0	0	0	0	1	0	3
0	0	0	0	0	0	1	1	4
0	0	0	0	0	1	0	0	5
0	0	0	0	0	1	0	1	6
0	0	0	0	0	1	1	0	7

Table 7-34. Precision Timer Modulus Counter Prescaler Select Examples when PRNT = 1 (continued)

PTMPS7	PTMPS6	PTMPS5	PTMPS4	PTMPS3	PTMPS2	PTMPS1	PTMPS0	Prescaler Division Rate
0	0	0	0	0	1	1	1	8
0	0	0	0	1	1	1	1	16
0	0	0	1	1	1	1	1	32
0	0	1	1	1	1	1	1	64
0	1	1	1	1	1	1	1	128
1	1	1	1	1	1	1	1	256

7.3.2.27 16-Bit Pulse Accumulator B Control Register (PBCTL)

	7	6	5	4	3	2	1	0
R	0	PBEN	0	0	0	0	PBOVI	0
W								
Reset	0	0	0	0	0	0	0	0

= Unimplemented or Reserved

Figure 7-49. 16-Bit Pulse Accumulator B Control Register (PBCTL)

Read: Anytime

Write: Anytime

All bits reset to zero.

Table 7-35. PBCTL Field Descriptions

Field	Description
6 PBEN	**Pulse Accumulator B System Enable** — PBEN is independent from TEN. With timer disabled, the pulse accumulator can still function unless pulse accumulator is disabled. 0 16-bit pulse accumulator system disabled. 8-bit PAC1 and PAC0 can be enabled when their related enable bits in ICPAR are set. 1 Pulse accumulator B system enabled. The two 8-bit pulse accumulators PAC1 and PAC0 are cascaded to form the PACB 16-bit pulse accumulator B. When PACB is enabled, the PACN1 and PACN0 registers contents are respectively the high and low byte of the PACB. PA1EN and PA0EN control bits in ICPAR have no effect. The PACB shares the input pin with IC0.
1 PBOVI	**Pulse Accumulator B Overflow Interrupt Enable** 0 Interrupt inhibited 1 Interrupt requested if PBOVF is set

7.3.2.28 Pulse Accumulator B Flag Register (PBFLG)

	7	6	5	4	3	2	1	0
R	0	0	0	0	0	0	PBOVF	0
W								
Reset	0	0	0	0	0	0	0	0

= Unimplemented or Reserved

Figure 7-50. Pulse Accumulator B Flag Register (PBFLG)

Read: Anytime

Write used in the flag clearing mechanism. Writing a one to the flag clears the flag. Writing a zero will not affect the current status of the bit.

NOTE

When TFFCA = 1, the flag cannot be cleared via the normal flag clearing mechanism (writing a one to the flag). Reference Section 7.3.2.6, “Timer System Control Register 1 (TSCR1)”.

All bits reset to zero.

PBFLG indicates when interrupt conditions have occurred. The flag can be cleared via the normal flag clearing mechanism (writing a one to the flag) or via the fast flag clearing mechanism (Reference TFFCA bit in Section 7.3.2.6, “Timer System Control Register 1 (TSCR1)”).

Table 7-36. PBFLG Field Descriptions

Field	Description
1 PBOVF	**Pulse Accumulator B Overflow Flag** — This bit is set when the 16-bit pulse accumulator B overflows from 0xFFFF to 0x0000, or when 8-bit pulse accumulator 1 (PAC1) overflows from 0x00FF to 0x0000. When PACMX = 1, PBOVF bit can also be set if 8-bit pulse accumulator 1 (PAC1) reaches 0x00FF and an active edge follows on PT1.

7.3.2.29 8-Bit Pulse Accumulators Holding Registers (PA3H–PA0H)

	7	6	5	4	3	2	1	0
R	PA3H7	PA3H6	PA3H5	PA3H4	PA3H3	PA3H2	PA3H1	PA3H0
W								
Reset	0	0	0	0	0	0	0	0

= Unimplemented or Reserved

Figure 7-51. 8-Bit Pulse Accumulators Holding Register 3 (PA3H)

	7	6	5	4	3	2	1	0
R	PA2H7	PA2H6	PA2H5	PA2H4	PA2H3	PA2H2	PA2H1	PA2H0
W								
Reset	0	0	0	0	0	0	0	0

= Unimplemented or Reserved

Figure 7-52. 8-Bit Pulse Accumulators Holding Register 2 (PA2H)

	7	6	5	4	3	2	1	0
R	PA1H7	PA1H6	PA1H5	PA1H4	PA1H3	PA1H2	PA1H1	PA1H0
W								
Reset	0	0	0	0	0	0	0	0

= Unimplemented or Reserved

Figure 7-53. 8-Bit Pulse Accumulators Holding Register 1 (PA1H)

	7	6	5	4	3	2	1	0
R	PA0H7	PA0H6	PA0H5	PA0H4	PA0H3	PA0H2	PA0H1	PA0H0
W								
Reset	0	0	0	0	0	0	0	0

= Unimplemented or Reserved

Figure 7-54. 8-Bit Pulse Accumulators Holding Register 0 (PA0H)

Read: Anytime.

Write: Has no effect.

All bits reset to zero.

These registers are used to latch the value of the corresponding pulse accumulator when the related bits in register ICPAR are enabled (see Section 7.4.1.3, “Pulse Accumulators”).

7.3.2.30 Modulus Down-Counter Count Register (MCCNT)

	15	14	13	12	11	10	9	8
R/W	MCCNT15	MCCNT14	MCCNT13	MCCNT12	MCCNT11	MCCNT10	MCCNT9	MCCNT8
Reset	1	1	1	1	1	1	1	1

Figure 7-55. Modulus Down-Counter Count Register High (MCCNT)

	7	6	5	4	3	2	1	0
R/W	MCCNT7	MCCNT6	MCCNT5	MCCNT4	MCCNT3	MCCNT2	MCCNT1	MCCNT9
Reset	1	1	1	1	1	1	1	1

Figure 7-56. Modulus Down-Counter Count Register Low (MCCNT)

Read: Anytime

Write: Anytime.

All bits reset to one.

A full access for the counter register will take place in one clock cycle.

NOTE

A separate read/write for high byte and low byte will give different results than accessing them as a word.

If the RDMCL bit in MCCTL register is cleared, reads of the MCCNT register will return the present value of the count register. If the RDMCL bit is set, reads of the MCCNT will return the contents of the load register.

If a 0x0000 is written into MCCNT when LATQ and BUFEN in ICSYS register are set, the input capture and pulse accumulator registers will be latched.

With a 0x0000 write to the MCCNT, the modulus counter will stay at zero and does not set the MCZF flag in MCFLG register.

If the modulus down counter is enabled (MCEN = 1) and modulus mode is enabled (MODMC = 1), a write to MCCNT will update the load register with the value written to it. The count register will not be updated with the new value until the next counter underflow.

If modulus mode is not enabled (MODMC = 0), a write to MCCNT will clear the modulus prescaler and will immediately update the counter register with the value written to it and down-counts to 0x0000 and stops.

The FLMC bit in MCCTL can be used to immediately update the count register with the new value if an immediate load is desired.

7.3.2.31 Timer Input Capture Holding Registers 0–3 (TCxH)

	15	14	13	12	11	10	9	8
R	TC15	TC14	TC13	TC12	TC11	TC10	TC9	TC8
W								
Reset	0	0	0	0	0	0	0	0

= Unimplemented or Reserved

Figure 7-57. Timer Input Capture Holding Register 0 High (TC0H)

	7	6	5	4	3	2	1	0
R	TC7	TC6	TC5	TC4	TC3	TC2	TC1	TC0
W								
Reset	0	0	0	0	0	0	0	0

= Unimplemented or Reserved

Figure 7-58. Timer Input Capture Holding Register 0 Low (TC0H)

	15	14	13	12	11	10	9	8
R	TC15	TC14	TC13	TC12	TC11	TC10	TC9	TC8
W								
Reset	0	0	0	0	0	0	0	0

= Unimplemented or Reserved

Figure 7-59. Timer Input Capture Holding Register 1 High (TC1H)

	7	6	5	4	3	2	1	0
R	TC7	TC6	TC5	TC4	TC3	TC2	TC1	TC0
W								
Reset	0	0	0	0	0	0	0	0

= Unimplemented or Reserved

Figure 7-60. Timer Input Capture Holding Register 1 Low (TC1H)

	15	14	13	12	11	10	9	8
R	TC15	TC14	TC13	TC12	TC11	TC10	TC9	TC8
W								
Reset	0	0	0	0	0	0	0	0

= Unimplemented or Reserved

Figure 7-61. Timer Input Capture Holding Register 2 High (TC2H)

	7	6	5	4	3	2	1	0
R	TC7	TC6	TC5	TC4	TC3	TC2	TC1	TC0
W								
Reset	0	0	0	0	0	0	0	0

= Unimplemented or Reserved

Figure 7-62. Timer Input Capture Holding Register 2 Low (TC2H)

	15	14	13	12	11	10	9	8
R	TC15	TC14	TC13	TC12	TC11	TC10	TC9	TC8
W								
Reset	0	0	0	0	0	0	0	0

= Unimplemented or Reserved

Figure 7-63. Timer Input Capture Holding Register 3 High (TC3H)

	7	6	5	4	3	2	1	0
R	TC7	TC6	TC5	TC4	TC3	TC2	TC1	TC0
W								
Reset	0	0	0	0	0	0	0	0

= Unimplemented or Reserved

Figure 7-64. Timer Input Capture Holding Register 3 Low (TC3H)

Read: Anytime

Write: Has no effect.

All bits reset to zero.

These registers are used to latch the value of the input capture registers TC0–TC3. The corresponding IOSx bits in TIOS should be cleared (see Section 7.4.1.1, “IC Channels”).

7.4 Functional Description

This section provides a complete functional description of the ECT block, detailing the operation of the design from the end user perspective in a number of subsections.

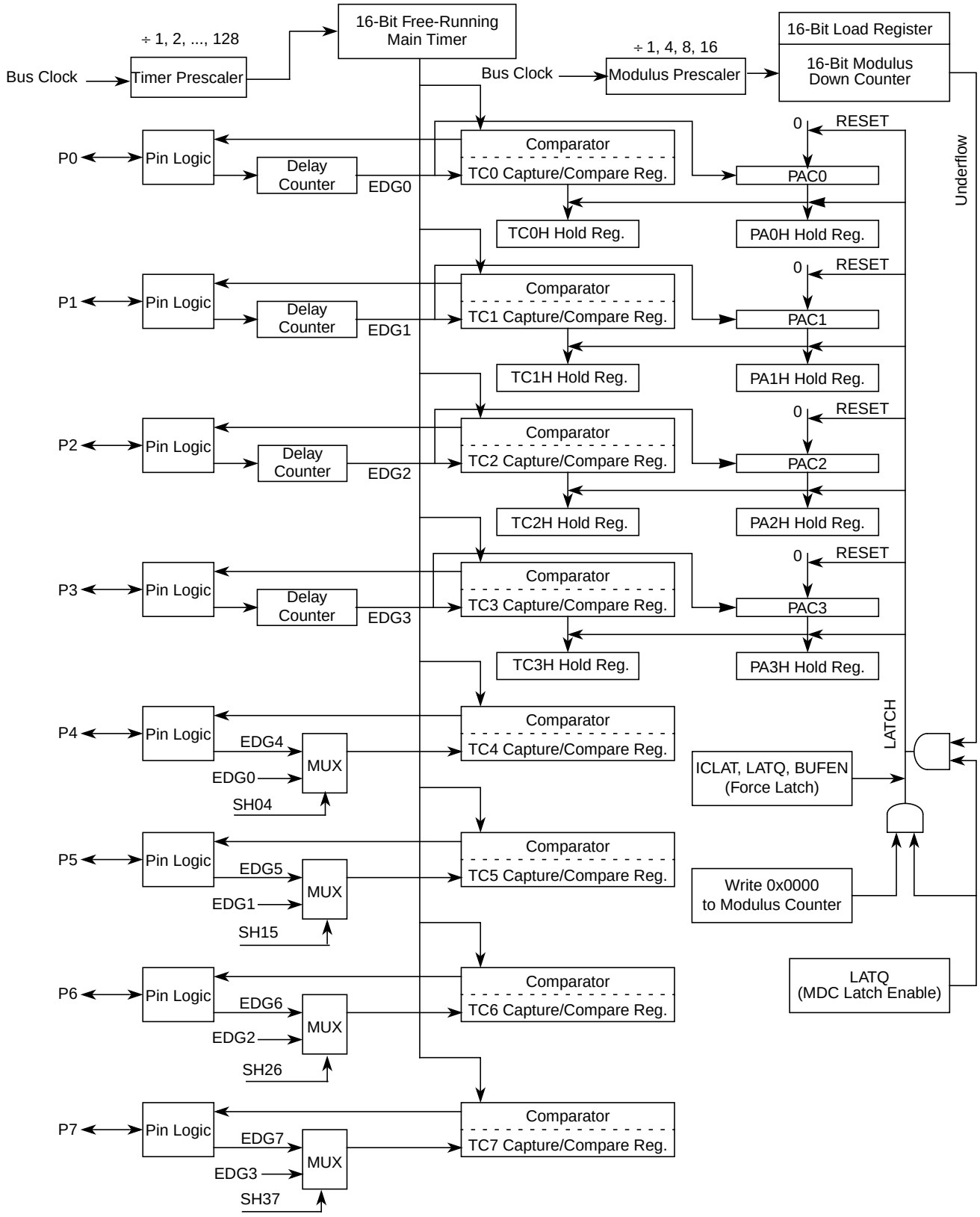

Figure 7-65. Detailed Timer Block Diagram in Latch Mode when PRNT = 0

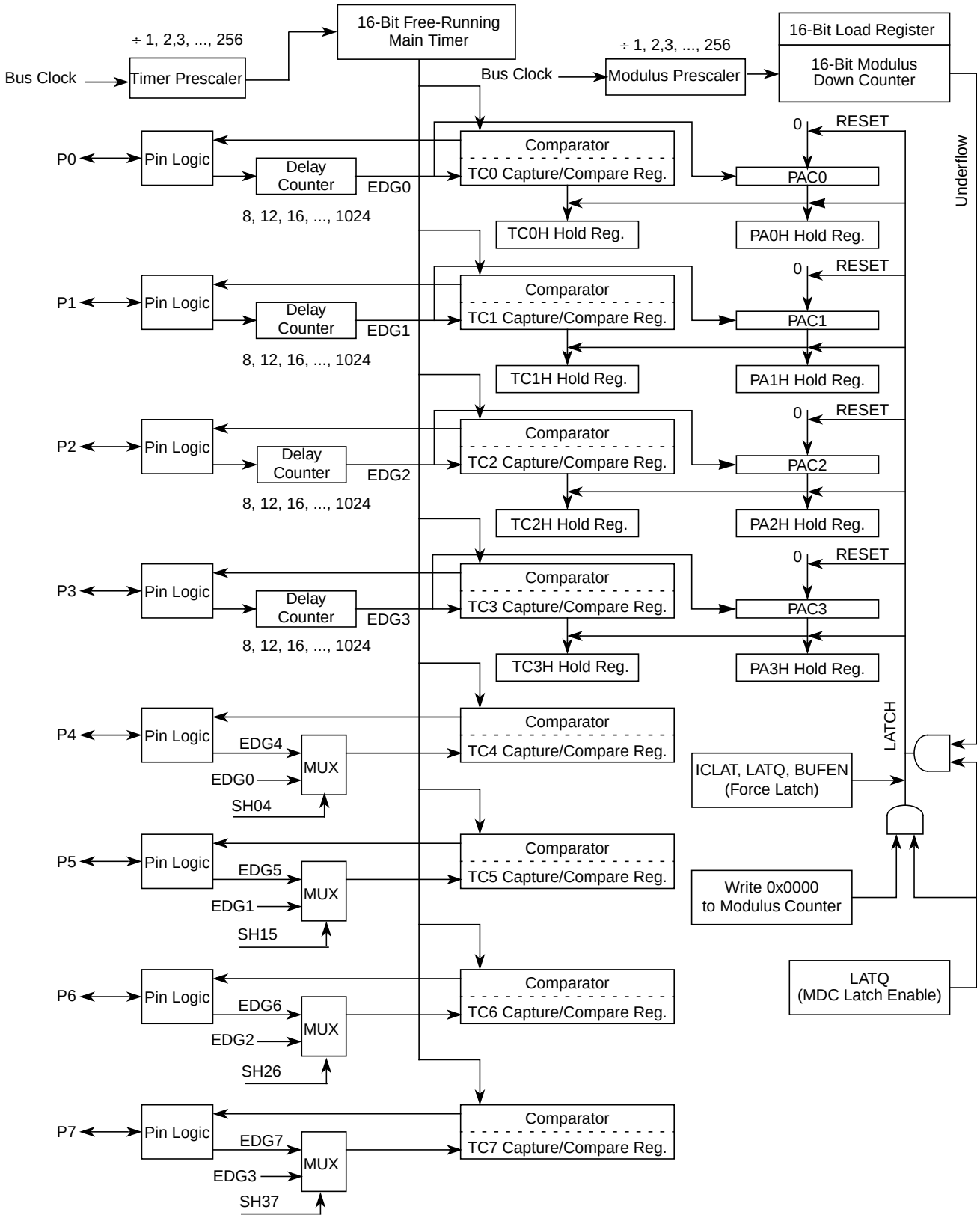

Figure 7-66. Detailed Timer Block Diagram in Latch Mode when PRNT = 1

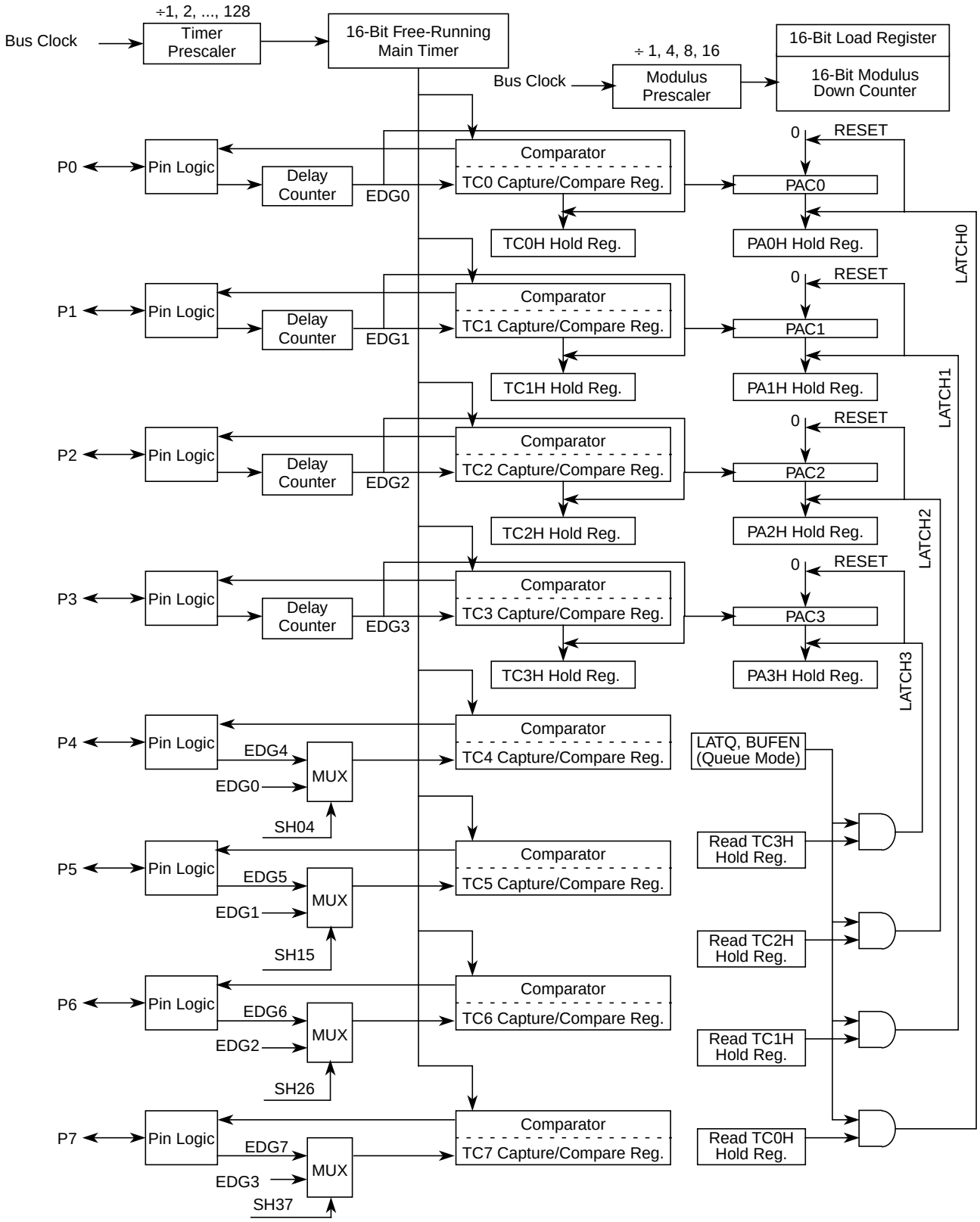

Figure 7-67. Detailed Timer Block Diagram in Queue Mode when PRNT = 0

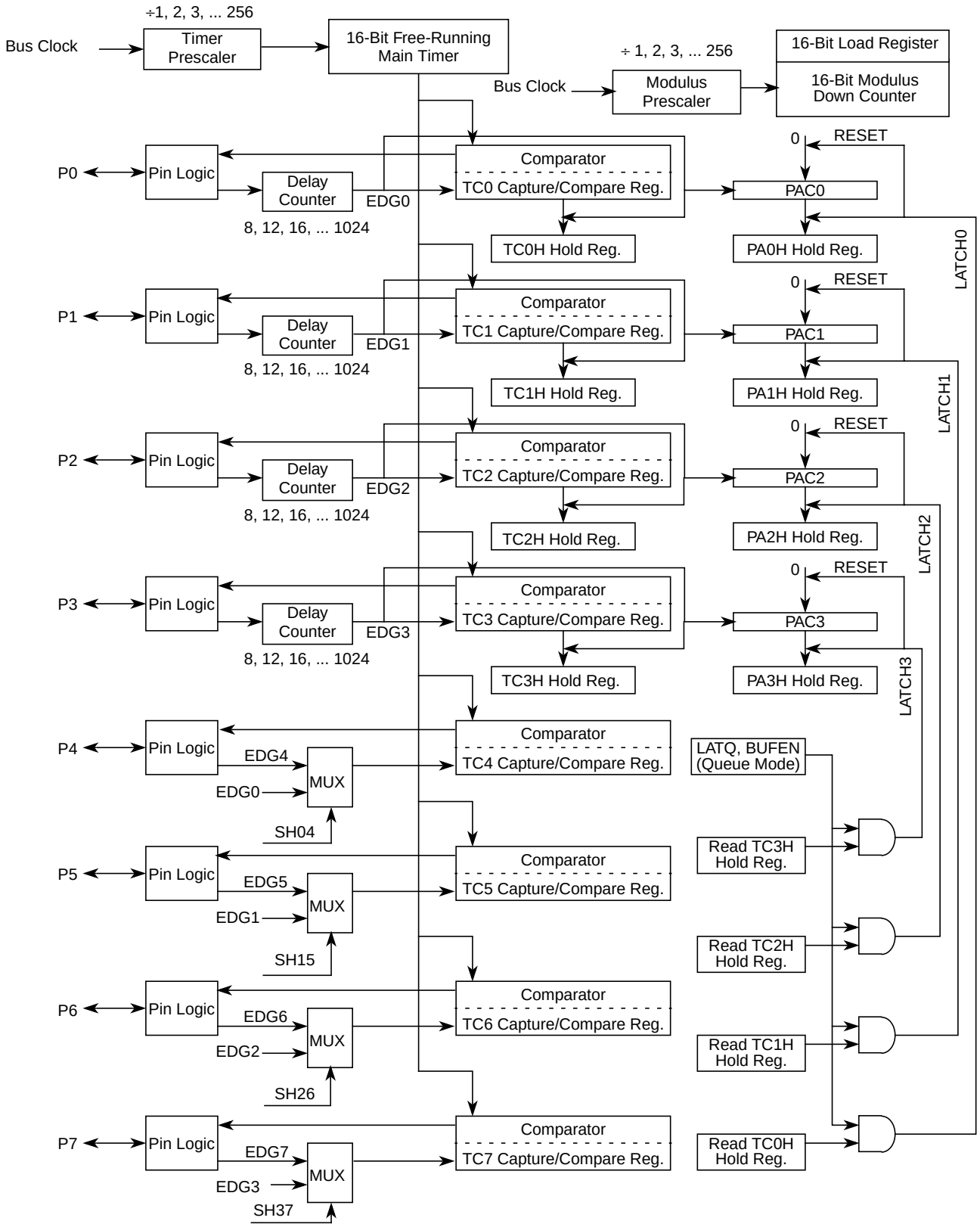

Figure 7-68. Detailed Timer Block Diagram in Queue Mode when PRNT = 1

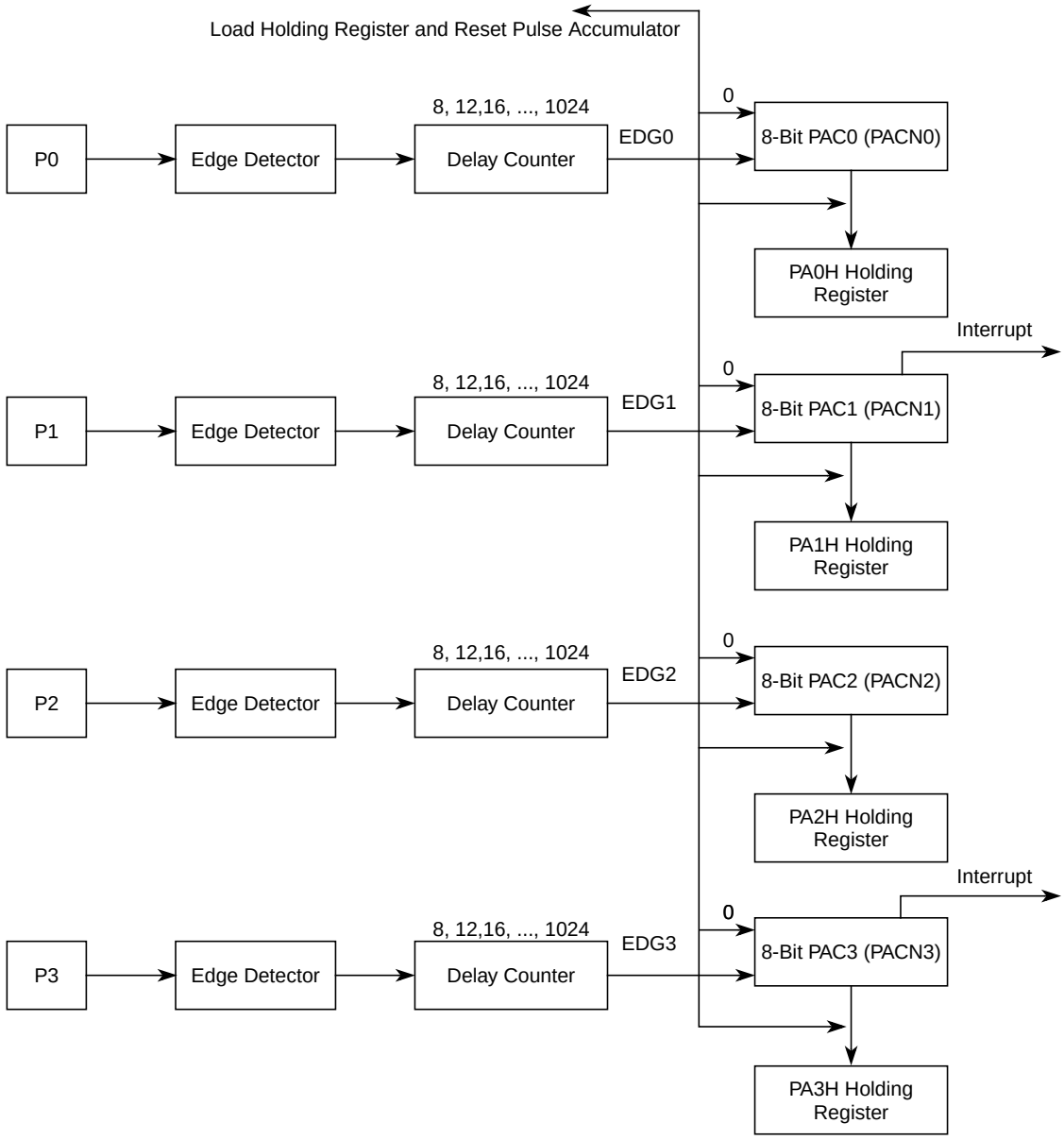

Figure 7-69. 8-Bit Pulse Accumulators Block Diagram

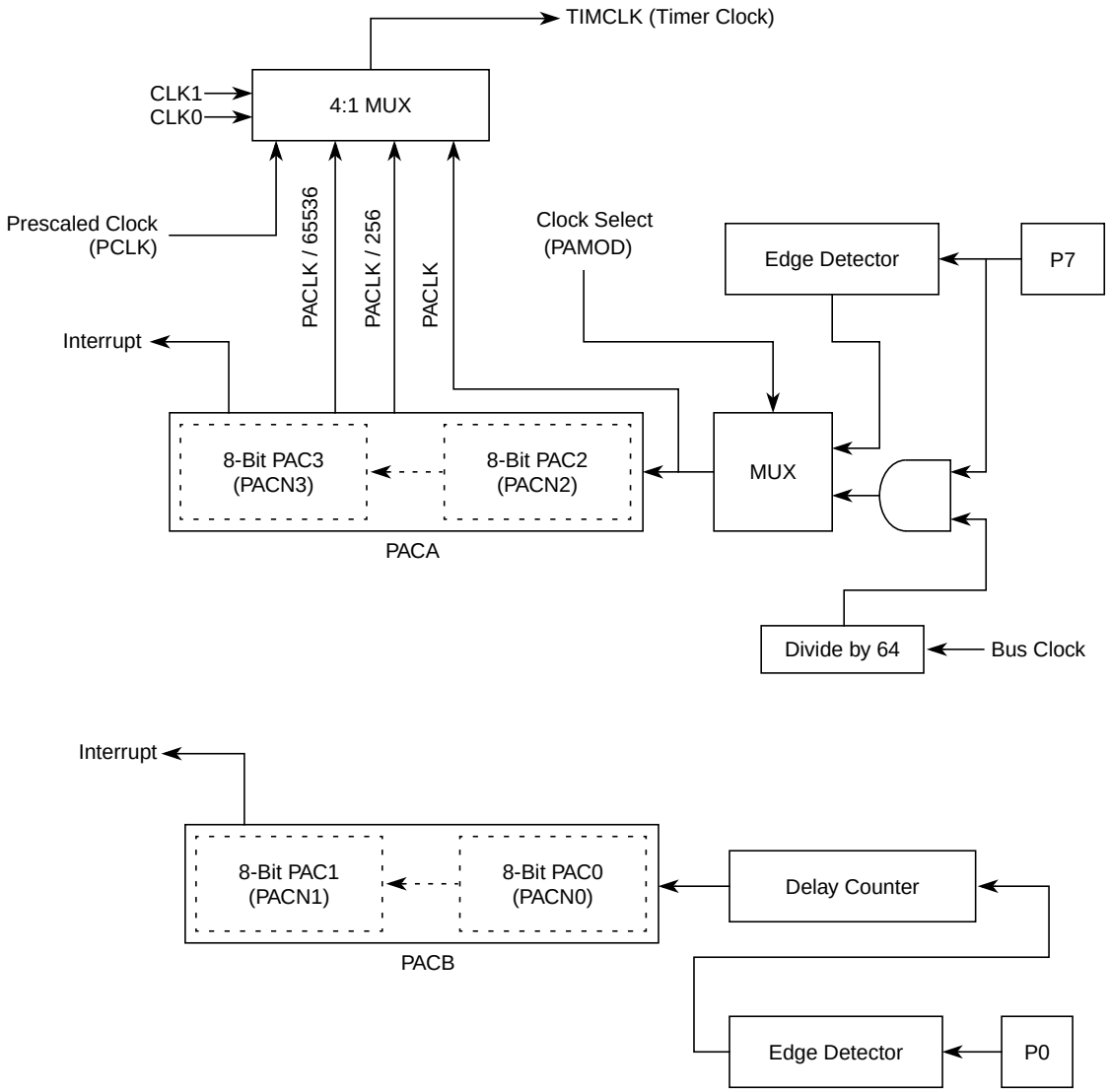

Figure 7-70. 16-Bit Pulse Accumulators Block Diagram

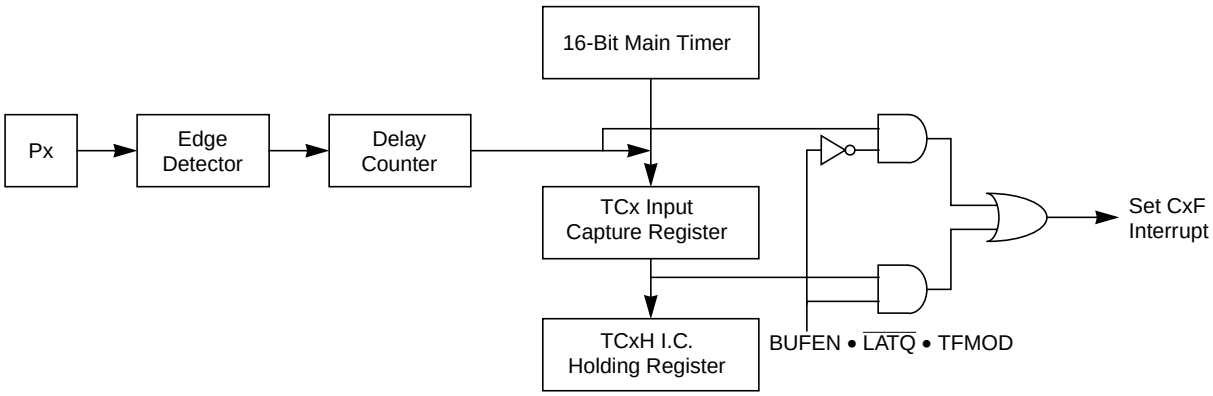

Figure 7-71. Block Diagram for Port 7 with Output Compare/Pulse Accumulator A

7.4.1 Enhanced Capture Timer Modes of Operation

The enhanced capture timer has 8 input capture, output compare (IC/OC) channels, same as on the HC12 standard timer (timer channels TC0 to TC7). When channels are selected as input capture by selecting the IOSx bit in TIOS register, they are called input capture (IC) channels.

Four IC channels (channels 7–4) are the same as on the standard timer with one capture register each that memorizes the timer value captured by an action on the associated input pin.

Four other IC channels (channels 3–0), in addition to the capture register, also have one buffer each called a holding register. This allows two different timer values to be saved without generating any interrupts.

Four 8-bit pulse accumulators are associated with the four buffered IC channels (channels 3–0). Each pulse accumulator has a holding register to memorize their value by an action on its external input. Each pair of pulse accumulators can be used as a 16-bit pulse accumulator.

The 16-bit modulus down-counter can control the transfer of the IC registers and the pulse accumulators contents to the respective holding registers for a given period, every time the count reaches zero.

The modulus down-counter can also be used as a stand-alone time base with periodic interrupt capability.

7.4.1.1 IC Channels

The IC channels are composed of four standard IC registers and four buffered IC channels.

- An IC register is empty when it has been read or latched into the holding register.
- A holding register is empty when it has been read.

7.4.1.1.1 Non-Buffered IC Channels

The main timer value is memorized in the IC register by a valid input pin transition. If the corresponding NOVWx bit of the ICOVW register is cleared, with a new occurrence of a capture, the contents of IC register are overwritten by the new value. If the corresponding NOVWx bit of the ICOVW register is set, the capture register cannot be written unless it is empty. This will prevent the captured value from being overwritten until it is read.

7.4.1.1.2 Buffered IC Channels

There are two modes of operations for the buffered IC channels:

1. IC latch mode (LATQ = 1)

   The main timer value is memorized in the IC register by a valid input pin transition (see Figure 7-65 and Figure 7-66).

   The value of the buffered IC register is latched to its holding register by the modulus counter for a given period when the count reaches zero, by a write 0x0000 to the modulus counter or by a write to ICLAT in the MCCTL register.

   If the corresponding NOVWx bit of the ICOVW register is cleared, with a new occurrence of a capture, the contents of IC register are overwritten by the new value. In case of latching, the contents of its holding register are overwritten.

If the corresponding NOVWx bit of the ICOVW register is set, the capture register or its holding register cannot be written by an event unless they are empty (see Section 7.4.1.1, “IC Channels”). This will prevent the captured value from being overwritten until it is read or latched in the holding register.

2. IC Queue Mode (LATQ = 0)

   The main timer value is memorized in the IC register by a valid input pin transition (see Figure 7-67 and Figure 7-68).

   If the corresponding NOVWx bit of the ICOVW register is cleared, with a new occurrence of a capture, the value of the IC register will be transferred to its holding register and the IC register memorizes the new timer value.

   If the corresponding NOVWx bit of the ICOVW register is set, the capture register or its holding register cannot be written by an event unless they are empty (see Section 7.4.1.1, “IC Channels”).

   In queue mode, reads of the holding register will latch the corresponding pulse accumulator value to its holding register.

7.4.1.1.3 Delayed IC Channels

There are four delay counters in this module associated with IC channels 0–3. The use of this feature is explained in the diagram and notes below.

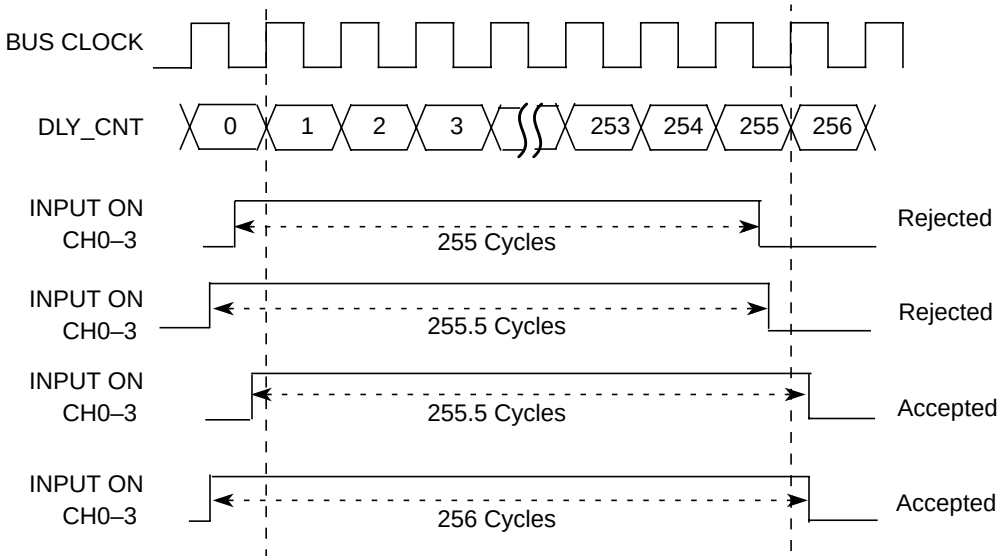

Figure 7-72. Channel Input Validity with Delay Counter Feature

In Figure 7-72 a delay counter value of 256 bus cycles is considered.

1. Input pulses with a duration of (DLY_CNT – 1) cycles or shorter are rejected.
2. Input pulses with a duration between (DLY_CNT – 1) and DLY_CNT cycles may be rejected or accepted, depending on their relative alignment with the sample points.
3. Input pulses with a duration between (DLY_CNT – 1) and DLY_CNT cycles may be rejected or accepted, depending on their relative alignment with the sample points.
4. Input pulses with a duration of DLY_CNT or longer are accepted.

7.4.1.2 OC Channel Initialization

Internal register whose output drives OCx when TIOS is set, can be force loaded with a desired data by writing to CFORC register before OCx is configured for output compare action. This allows a glitch free switch over of port from general purpose I/O to timer output once the output compare is enabled.

7.4.1.3 Pulse Accumulators

There are four 8-bit pulse accumulators with four 8-bit holding registers associated with the four IC buffered channels 3–0. A pulse accumulator counts the number of active edges at the input of its channel.

The minimum pulse width for the PAI input is greater than two bus clocks.The maximum input frequency on the pulse accumulator channel is one half the bus frequency or Eclk.

The user can prevent the 8-bit pulse accumulators from counting further than 0x00FF by utilizing the PACMX control bit in the ICSYS register. In this case, a value of 0x00FF means that 255 counts or more have occurred.

Each pair of pulse accumulators can be used as a 16-bit pulse accumulator (see Figure 7-70).

To operate the 16-bit pulse accumulators A and B (PACA and PACB) independently of input capture or output compare 7 and 0 respectively, the user must set the corresponding bits: IOSx = 1, OMx = 0, and OLx = 0. OC7M7 or OC7M0 in the OC7M register must also be cleared.

There are two modes of operation for the pulse accumulators:

- Pulse accumulator latch mode

  The value of the pulse accumulator is transferred to its holding register when the modulus down-counter reaches zero, a write 0x0000 to the modulus counter or when the force latch control bit ICLAT is written.

  At the same time the pulse accumulator is cleared.
- Pulse accumulator queue mode

  When queue mode is enabled, reads of an input capture holding register will transfer the contents of the associated pulse accumulator to its holding register.

  At the same time the pulse accumulator is cleared.

7.4.1.4 Modulus Down-Counter

The modulus down-counter can be used as a time base to generate a periodic interrupt. It can also be used to latch the values of the IC registers and the pulse accumulators to their holding registers.

The action of latching can be programmed to be periodic or only once.

7.4.1.5 Precision Timer

By enabling the PRNT bit of the TSCR1 register, the performance of the timer can be enhanced. In this case, it is possible to set additional prescaler settings for the main timer counter and modulus down counter and enhance delay counter settings compared to the settings in the present ECT timer.

7.4.1.6 Flag Clearing Mechanisms

The flags in the ECT can be cleared one of two ways:

1. Normal flag clearing mechanism (TFFCA = 0)

   Any of the ECT flags can be cleared by writing a one to the flag.

2. Fast flag clearing mechanism (TFFCA = 1)

   With the timer fast flag clear all (TFFCA) enabled, the ECT flags can only be cleared by accessing the various registers associated with the ECT modes of operation as described below. The flags cannot be cleared via the normal flag clearing mechanism. This fast flag clearing mechanism has the advantage of eliminating the software overhead required by a separate clear sequence. Extra care must be taken to avoid accidental flag clearing due to unintended accesses.

   — Input capture

     A read from an input capture channel register causes the corresponding channel flag, CxF, to be cleared in the TFLG1 register.

   — Output compare

     A write to the output compare channel register causes the corresponding channel flag, CxF, to be cleared in the TFLG1 register.

   — Timer counter

     Any access to the TCNT register clears the TOF flag in the TFLG2 register.

   — Pulse accumulator A

     Any access to the PACN3 and PACN2 registers clears the PAOVF and PAIF flags in the PAFLG register.

   — Pulse accumulator B

     Any access to the PACN1 and PACN0 registers clears the PBOVF flag in the PBFLG register.

   — Modulus down counter

     Any access to the MCCNT register clears the MCZF flag in the MCFLG register.

7.4.2 Reset

The reset state of each individual bit is listed within the register description section (Section 7.3, “Memory Map and Register Definition”) which details the registers and their bit-fields.

7.4.3 Interrupts

This section describes interrupts originated by the ECT block. The MCU must service the interrupt requests. Table 7-37 lists the interrupts generated by the ECT to communicate with the MCU.

Table 7-37. ECT Interrupts

Interrupt Source	Description
Timer channel 7–0	Active high timer channel interrupts 7–0
Modulus counter underflow	Active high modulus counter interrupt
Pulse accumulator B overflow	Active high pulse accumulator B interrupt
Pulse accumulator A input	Active high pulse accumulator A input interrupt
Pulse accumulator A overflow	Pulse accumulator overflow interrupt
Timer overflow	Timer 0verflow interrupt

The ECT only originates interrupt requests. The following is a description of how the module makes a request and how the MCU should acknowledge that request. The interrupt vector offset and interrupt number are chip dependent.

7.4.3.1 Channel [7:0] Interrupt

This active high output will be asserted by the module to request a timer channel 7–0 interrupt to be serviced by the system controller.

7.4.3.2 Modulus Counter Interrupt

This active high output will be asserted by the module to request a modulus counter underflow interrupt to be serviced by the system controller.

7.4.3.3 Pulse Accumulator B Overflow Interrupt

This active high output will be asserted by the module to request a timer pulse accumulator B overflow interrupt to be serviced by the system controller.

7.4.3.4 Pulse Accumulator A Input Interrupt

This active high output will be asserted by the module to request a timer pulse accumulator A input interrupt to be serviced by the system controller.

7.4.3.5 Pulse Accumulator A Overflow Interrupt

This active high output will be asserted by the module to request a timer pulse accumulator A overflow interrupt to be serviced by the system controller.

7.4.3.6 Timer Overflow Interrupt

This active high output will be asserted by the module to request a timer overflow interrupt to be serviced by the system controller.

Chapter 8
Pulse-Width Modulator (S12PWM8B8CV1)

8.1 Introduction

The PWM definition is based on the HC12 PWM definitions. It contains the basic features from the HC11 with some of the enhancements incorporated on the HC12: center aligned output mode and four available clock sources.The PWM module has eight channels with independent control of left and center aligned outputs on each channel.

Each of the eight channels has a programmable period and duty cycle as well as a dedicated counter. A flexible clock select scheme allows a total of four different clock sources to be used with the counters. Each of the modulators can create independent continuous waveforms with software-selectable duty rates from 0% to 100%. The PWM outputs can be programmed as left aligned outputs or center aligned outputs.

8.1.1 Features

The PWM block includes these distinctive features:

- Eight independent PWM channels with programmable period and duty cycle
- Dedicated counter for each PWM channel
- Programmable PWM enable/disable for each channel
- Software selection of PWM duty pulse polarity for each channel
- Period and duty cycle are double buffered. Change takes effect when the end of the effective period is reached (PWM counter reaches zero) or when the channel is disabled.
- Programmable center or left aligned outputs on individual channels
- Eight 8-bit channel or four 16-bit channel PWM resolution
- Four clock sources (A, B, SA, and SB) provide for a wide range of frequencies
- Programmable clock select logic
- Emergency shutdown

8.1.2 Modes of Operation

There is a software programmable option for low power consumption in wait mode that disables the input clock to the prescaler.

In freeze mode there is a software programmable option to disable the input clock to the prescaler. This is useful for emulation.

8.1.3 Block Diagram

Figure 8-1 shows the block diagram for the 8-bit 8-channel PWM block.

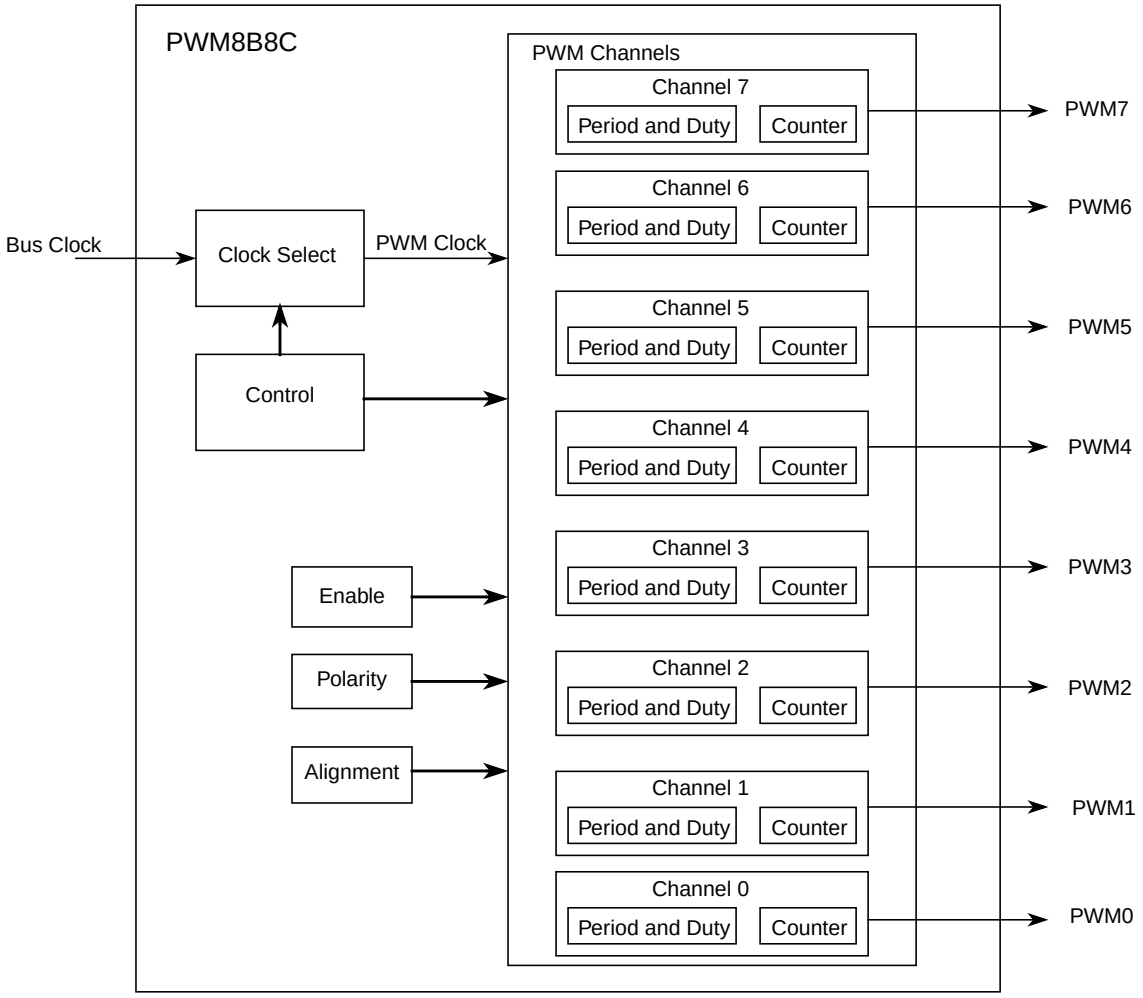

Figure 8-1. PWM Block Diagram

8.2 External Signal Description

The PWM module has a total of 8 external pins.

8.2.1 PWM7 — PWM Channel 7

This pin serves as waveform output of PWM channel 7 and as an input for the emergency shutdown feature.

8.2.2 PWM6 — PWM Channel 6

This pin serves as waveform output of PWM channel 6.

8.2.3 PWM5 — PWM Channel 5

This pin serves as waveform output of PWM channel 5.

8.2.4 PWM4 — PWM Channel 4

This pin serves as waveform output of PWM channel 4.

8.2.5 PWM3 — PWM Channel 3

This pin serves as waveform output of PWM channel 3.

8.2.6 PWM3 — PWM Channel 2

This pin serves as waveform output of PWM channel 2.

8.2.7 PWM3 — PWM Channel 1

This pin serves as waveform output of PWM channel 1.

8.2.8 PWM3 — PWM Channel 0

This pin serves as waveform output of PWM channel 0.

8.3 Memory Map and Register Definition

This section describes in detail all the registers and register bits in the PWM module.

The special-purpose registers and register bit functions that are not normally available to device end users, such as factory test control registers and reserved registers, are clearly identified by means of shading the appropriate portions of address maps and register diagrams. Notes explaining the reasons for restricting access to the registers and functions are also explained in the individual register descriptions.

8.3.1 Module Memory Map

This section describes the content of the registers in the PWM module. The base address of the PWM module is determined at the MCU level when the MCU is defined. The register decode map is fixed and begins at the first address of the module address offset. The figure below shows the registers associated with the PWM and their relative offset from the base address. The register detail description follows the order they appear in the register map.

Reserved bits within a register will always read as 0 and the write will be unimplemented. Unimplemented functions are indicated by shading the bit. .

NOTE

Register Address = Base Address + Address Offset, where the Base Address is defined at the MCU level and the Address Offset is defined at the module level.

8.3.2 Register Descriptions

This section describes in detail all the registers and register bits in the PWM module.

Register Name		Bit 7	6	5	4	3	2	1	Bit 0
PWME	R/W	PWME7	PWME6	PWME5	PWME4	PWME3	PWME2	PWME1	PWME0
PWMPOL	R/W	PPOL7	PPOL6	PPOL5	PPOL4	PPOL3	PPOL2	PPOL1	PPOL0
PWMCLK	R/W	PCLK7	PCLKL6	PCLK5	PCLK4	PCLK3	PCLK2	PCLK1	PCLK0
PWMPRCLK	R	0	PCKB2	PCKB1	PCKB0	0	PCKA2	PCKA1	PCKA0
	W								
PWMCAE	R/W	CAE7	CAE6	CAE5	CAE4	CAE3	CAE2	CAE1	CAE0
PWMCTL	R	CON67	CON45	CON23	CON01	PSWAI	PFRZ	0	0
	W								
PWMTST[1]	R	0	0	0	0	0	0	0	0
	W								
PWMPRSC[1]	R	0	0	0	0	0	0	0	0
	W								
PWMSCLA	R/W	Bit 7	6	5	4	3	2	1	Bit 0
PWMSCLB	R/W	Bit 7	6	5	4	3	2	1	Bit 0
PWMSCNTA[1]	R	0	0	0	0	0	0	0	0
	W								
PWMSCNTB[1]	R	0	0	0	0	0	0	0	0
	W								

= Unimplemented or Reserved

Figure 8-2. PWM Register Summary (Sheet 1 of 3)

Register Name		Bit 7	6	5	4	3	2	1	Bit 0
PWMCNT0	R	Bit 7	6	5	4	3	2	1	Bit 0
	W	0	0	0	0	0	0	0	0
PWMCNT1	R	Bit 7	6	5	4	3	2	1	Bit 0
	W	0	0	0	0	0	0	0	0
PWMCNT2	R	Bit 7	6	5	4	3	2	1	Bit 0
	W	0	0	0	0	0	0	0	0
PWMCNT3	R	Bit 7	6	5	4	3	2	1	Bit 0
	W	0	0	0	0	0	0	0	0
PWMCNT4	R	Bit 7	6	5	4	3	2	1	Bit 0
	W	0	0	0	0	0	0	0	0
PWMCNT5	R	Bit 7	6	5	4	3	2	1	Bit 0
	W	0	0	0	0	0	0	0	0
PWMCNT6	R	Bit 7	6	5	4	3	2	1	Bit 0
	W	0	0	0	0	0	0	0	0
PWMCNT7	R	Bit 7	6	5	4	3	2	1	Bit 0
	W	0	0	0	0	0	0	0	0
PWMPER0	R W	Bit 7	6	5	4	3	2	1	Bit 0
PWMPER1	R W	Bit 7	6	5	4	3	2	1	Bit 0
PWMPER2	R W	Bit 7	6	5	4	3	2	1	Bit 0
PWMPER3	R W	Bit 7	6	5	4	3	2	1	Bit 0
PWMPER4	R W	Bit 7	6	5	4	3	2	1	Bit 0
PWMPER5	R W	Bit 7	6	5	4	3	2	1	Bit 0
PWMPER6	R W	Bit 7	6	5	4	3	2	1	Bit 0

= Unimplemented or Reserved

Figure 8-2. PWM Register Summary (Sheet 2 of 3)

Register Name		Bit 7	6	5	4	3	2	1	Bit 0
PWMPER7	R/W	Bit 7	6	5	4	3	2	1	Bit 0
PWMDTY0	R/W	Bit 7	6	5	4	3	2	1	Bit 0
PWMDTY1	R/W	Bit 7	6	5	4	3	2	1	Bit 0
PWMDTY2	R/W	Bit 7	6	5	4	3	2	1	Bit 0
PWMDTY3	R/W	Bit 7	6	5	4	3	2	1	Bit 0
PWMDTY4	R/W	Bit 7	6	5	4	3	2	1	Bit 0
PWMDTY5	R/W	Bit 7	6	5	4	3	2	1	Bit 0
PWMDTY6	R/W	Bit 7	6	5	4	3	2	1	Bit 0
PWMDTY7	R/W	Bit 7	6	5	4	3	2	1	Bit 0
PWMSDN	R	PWMIF	PWMIE	0	PWMLVL	0	PWM7IN	PWM7INL	PWM7ENA
	W			PWMRSTRT					

= Unimplemented or Reserved

Figure 8-2. PWM Register Summary (Sheet 3 of 3)

[1] Intended for factory test purposes only.

8.3.2.1 PWM Enable Register (PWME)

Each PWM channel has an enable bit (PWMEx) to start its waveform output. When any of the PWMEx bits are set (PWMEx = 1), the associated PWM output is enabled immediately. However, the actual PWM waveform is not available on the associated PWM output until its clock source begins its next cycle due to the synchronization of PWMEx and the clock source.

NOTE

The first PWM cycle after enabling the channel can be irregular.

An exception to this is when channels are concatenated. Once concatenated mode is enabled (CONxx bits set in PWMCTL register), enabling/disabling the corresponding 16-bit PWM channel is controlled by the

low order PWMEx bit.In this case, the high order bytes PWMEx bits have no effect and their corresponding PWM output lines are disabled.

While in run mode, if all eight PWM channels are disabled (PWME7–0 = 0), the prescaler counter shuts off for power savings.

	7	6	5	4	3	2	1	0
R W	PWME7	PWME6	PWME5	PWME4	PWME3	PWME2	PWME1	PWME0
Reset	0	0	0	0	0	0	0	0

Figure 8-3. PWM Enable Register (PWME)

Read: Anytime

Write: Anytime

Table 8-1. PWME Field Descriptions

Field	Description
7 PWME7	**Pulse Width Channel 7 Enable** 0 Pulse width channel 7 is disabled. 1 Pulse width channel 7 is enabled. The pulse modulated signal becomes available at PWM output bit 7 when its clock source begins its next cycle.
6 PWME6	**Pulse Width Channel 6 Enable** 0 Pulse width channel 6 is disabled. 1 Pulse width channel 6 is enabled. The pulse modulated signal becomes available at PWM output bit6 when its clock source begins its next cycle. If CON67=1, then bit has no effect and PWM output line 6 is disabled.
5 PWME5	**Pulse Width Channel 5 Enable** 0 Pulse width channel 5 is disabled. 1 Pulse width channel 5 is enabled. The pulse modulated signal becomes available at PWM output bit 5 when its clock source begins its next cycle.
4 PWME4	**Pulse Width Channel 4 Enable** 0 Pulse width channel 4 is disabled. 1 Pulse width channel 4 is enabled. The pulse modulated signal becomes available at PWM, output bit 4 when its clock source begins its next cycle. If CON45 = 1, then bit has no effect and PWM output bit4 is disabled.
3 PWME3	**Pulse Width Channel 3 Enable** 0 Pulse width channel 3 is disabled. 1 Pulse width channel 3 is enabled. The pulse modulated signal becomes available at PWM, output bit 3 when its clock source begins its next cycle.
2 PWME2	**Pulse Width Channel 2 Enable** 0 Pulse width channel 2 is disabled. 1 Pulse width channel 2 is enabled. The pulse modulated signal becomes available at PWM, output bit 2 when its clock source begins its next cycle. If CON23 = 1, then bit has no effect and PWM output bit2 is disabled.
1 PWME1	**Pulse Width Channel 1 Enable** 0 Pulse width channel 1 is disabled. 1 Pulse width channel 1 is enabled. The pulse modulated signal becomes available at PWM, output bit 1 when its clock source begins its next cycle.
0 PWME0	**Pulse Width Channel 0 Enable** 0 Pulse width channel 0 is disabled. 1 Pulse width channel 0 is enabled. The pulse modulated signal becomes available at PWM, output bit 0 when its clock source begins its next cycle. If CON01 = 1, then bit has no effect and PWM output line0 is disabled.

8.3.2.2 PWM Polarity Register (PWMPOL)

The starting polarity of each PWM channel waveform is determined by the associated PPOLx bit in the PWMPOL register. If the polarity bit is one, the PWM channel output is high at the beginning of the cycle and then goes low when the duty count is reached. Conversely, if the polarity bit is zero, the output starts low and then goes high when the duty count is reached.

	7	6	5	4	3	2	1	0
R W	PPOL7	PPOL6	PPOL5	PPOL4	PPOL3	PPOL2	PPOL1	PPOL0
Reset	0	0	0	0	0	0	0	0

Figure 8-4. PWM Polarity Register (PWMPOL)

Read: Anytime

Write: Anytime

NOTE

PPOLx register bits can be written anytime. If the polarity is changed while a PWM signal is being generated, a truncated or stretched pulse can occur during the transition

Table 8-2. PWMPOL Field Descriptions

Field	Description
7–0 PPOL[7:0]	**Pulse Width Channel 7–0 Polarity Bits** 0 PWM channel 7–0 outputs are low at the beginning of the period, then go high when the duty count is reached. 1 PWM channel 7–0 outputs are high at the beginning of the period, then go low when the duty count is reached.

8.3.2.3 PWM Clock Select Register (PWMCLK)

Each PWM channel has a choice of two clocks to use as the clock source for that channel as described below.

	7	6	5	4	3	2	1	0
R W	PCLK7	PCLKL6	PCLK5	PCLK4	PCLK3	PCLK2	PCLK1	PCLK0
Reset	0	0	0	0	0	0	0	0

Figure 8-5. PWM Clock Select Register (PWMCLK)

Read: Anytime

Write: Anytime

NOTE

Register bits PCLK0 to PCLK7 can be written anytime. If a clock select is changed while a PWM signal is being generated, a truncated or stretched pulse can occur during the transition.

Table 8-3. PWMCLK Field Descriptions

Field	Description
7 PCLK7	**Pulse Width Channel 7 Clock Select** 0 Clock B is the clock source for PWM channel 7. 1 Clock SB is the clock source for PWM channel 7.
6 PCLK6	**Pulse Width Channel 6 Clock Select** 0 Clock B is the clock source for PWM channel 6. 1 Clock SB is the clock source for PWM channel 6.
5 PCLK5	**Pulse Width Channel 5 Clock Select** 0 Clock A is the clock source for PWM channel 5. 1 Clock SA is the clock source for PWM channel 5.
4 PCLK4	**Pulse Width Channel 4 Clock Select** 0 Clock A is the clock source for PWM channel 4. 1 Clock SA is the clock source for PWM channel 4.
3 PCLK3	**Pulse Width Channel 3 Clock Select** 0 Clock B is the clock source for PWM channel 3. 1 Clock SB is the clock source for PWM channel 3.
2 PCLK2	**Pulse Width Channel 2 Clock Select** 0 Clock B is the clock source for PWM channel 2. 1 Clock SB is the clock source for PWM channel 2.
1 PCLK1	**Pulse Width Channel 1 Clock Select** 0 Clock A is the clock source for PWM channel 1. 1 Clock SA is the clock source for PWM channel 1.
0 PCLK0	**Pulse Width Channel 0 Clock Select** 0 Clock A is the clock source for PWM channel 0. 1 Clock SA is the clock source for PWM channel 0.

8.3.2.4 PWM Prescale Clock Select Register (PWMPRCLK)

This register selects the prescale clock source for clocks A and B independently.

	7	6	5	4	3	2	1	0
R	0	PCKB2	PCKB1	PCKB0	0	PCKA2	PCKA1	PCKA0
W								
Reset	0	0	0	0	0	0	0	0

= Unimplemented or Reserved

Figure 8-6. PWM Prescale Clock Select Register (PWMPRCLK)

Read: Anytime

Write: Anytime

NOTE

PCKB2–0 and PCKA2–0 register bits can be written anytime. If the clock pre-scale is changed while a PWM signal is being generated, a truncated or stretched pulse can occur during the transition.

Table 8-4. PWMPRCLK Field Descriptions

Field	Description
6–4 PCKB[2:0]	**Prescaler Select for Clock B** — Clock B is one of two clock sources which can be used for channels 2, 3, 6, or 7. These three bits determine the rate of clock B, as shown in Table 8-5.
2–0 PCKA[2:0]	**Prescaler Select for Clock A** — Clock A is one of two clock sources which can be used for channels 0, 1, 4 or 5. These three bits determine the rate of clock A, as shown in Table 8-6.

Table 8-5. Clock B Prescaler Selects

PCKB2	PCKB1	PCKB0	Value of Clock B
0	0	0	Bus clock
0	0	1	Bus clock / 2
0	1	0	Bus clock / 4
0	1	1	Bus clock / 8
1	0	0	Bus clock / 16
1	0	1	Bus clock / 32
1	1	0	Bus clock / 64
1	1	1	Bus clock / 128

Table 8-6. Clock A Prescaler Selects

PCKA2	PCKA1	PCKA0	Value of Clock A
0	0	0	Bus clock
0	0	1	Bus clock / 2
0	1	0	Bus clock / 4
0	1	1	Bus clock / 8
1	0	0	Bus clock / 16
1	0	1	Bus clock / 32
1	1	0	Bus clock / 64
1	1	1	Bus clock / 128

8.3.2.5 PWM Center Align Enable Register (PWMCAE)

The PWMCAE register contains eight control bits for the selection of center aligned outputs or left aligned outputs for each PWM channel. If the CAEx bit is set to a one, the corresponding PWM output will be center aligned. If the CAEx bit is cleared, the corresponding PWM output will be left aligned. See Section 8.4.2.5, “Left Aligned Outputs” and Section 8.4.2.6, “Center Aligned Outputs” for a more detailed description of the PWM output modes.

	7	6	5	4	3	2	1	0
R W	CAE7	CAE6	CAE5	CAE4	CAE3	CAE2	CAE1	CAE0
Reset	0	0	0	0	0	0	0	0

Figure 8-7. PWM Center Align Enable Register (PWMCAE)

Read: Anytime

Write: Anytime

NOTE

Write these bits only when the corresponding channel is disabled.

Table 8-7. PWMCAE Field Descriptions

Field	Description
7–0 CAE[7:0]	**Center Aligned Output Modes on Channels 7–0** 0 Channels 7–0 operate in left aligned output mode. 1 Channels 7–0 operate in center aligned output mode.

8.3.2.6 PWM Control Register (PWMCTL)

The PWMCTL register provides for various control of the PWM module.

	7	6	5	4	3	2	1	0
R	CON67	CON45	CON23	CON01	PSWAI	PFRZ	0	0
W								
Reset	0	0	0	0	0	0	0	0

= Unimplemented or Reserved

Figure 8-8. PWM Control Register (PWMCTL)

Read: Anytime

Write: Anytime

There are three control bits for concatenation, each of which is used to concatenate a pair of PWM channels into one 16-bit channel. When channels 6 and 7are concatenated, channel 6 registers become the high order bytes of the double byte channel. When channels 4 and 5 are concatenated, channel 4 registers become the high order bytes of the double byte channel. When channels 2 and 3 are concatenated, channel 2 registers become the high order bytes of the double byte channel. When channels 0 and 1 are concatenated, channel 0 registers become the high order bytes of the double byte channel.

See Section 8.4.2.7, “PWM 16-Bit Functions” for a more detailed description of the concatenation PWM Function.

NOTE

Change these bits only when both corresponding channels are disabled.

Table 8-8. PWMCTL Field Descriptions

Field	Description
7 CON67	**Concatenate Channels 6 and 7** 0 Channels 6 and 7 are separate 8-bit PWMs. 1 Channels 6 and 7 are concatenated to create one 16-bit PWM channel. Channel 6 becomes the high order byte and channel 7 becomes the low order byte. Channel 7 output pin is used as the output for this 16-bit PWM (bit 7 of port PWMP). Channel 7 clock select control-bit determines the clock source, channel 7 polarity bit determines the polarity, channel 7 enable bit enables the output and channel 7 center aligned enable bit determines the output mode.
6 CON45	**Concatenate Channels 4 and 5** 0 Channels 4 and 5 are separate 8-bit PWMs. 1 Channels 4 and 5 are concatenated to create one 16-bit PWM channel. Channel 4 becomes the high order byte and channel 5 becomes the low order byte. Channel 5 output pin is used as the output for this 16-bit PWM (bit 5 of port PWMP). Channel 5 clock select control-bit determines the clock source, channel 5 polarity bit determines the polarity, channel 5 enable bit enables the output and channel 5 center aligned enable bit determines the output mode.
5 CON23	**Concatenate Channels 2 and 3** 0 Channels 2 and 3 are separate 8-bit PWMs. 1 Channels 2 and 3 are concatenated to create one 16-bit PWM channel. Channel 2 becomes the high order byte and channel 3 becomes the low order byte. Channel 3 output pin is used as the output for this 16-bit PWM (bit 3 of port PWMP). Channel 3 clock select control-bit determines the clock source, channel 3 polarity bit determines the polarity, channel 3 enable bit enables the output and channel 3 center aligned enable bit determines the output mode.
4 CON01	**Concatenate Channels 0 and 1** 0 Channels 0 and 1 are separate 8-bit PWMs. 1 Channels 0 and 1 are concatenated to create one 16-bit PWM channel. Channel 0 becomes the high order byte and channel 1 becomes the low order byte. Channel 1 output pin is used as the output for this 16-bit PWM (bit 1 of port PWMP). Channel 1 clock select control-bit determines the clock source, channel 1 polarity bit determines the polarity, channel 1 enable bit enables the output and channel 1 center aligned enable bit determines the output mode.
3 PSWAI	**PWM Stops in Wait Mode —** Enabling this bit allows for lower power consumption in wait mode by disabling the input clock to the prescaler. 0 Allow the clock to the prescaler to continue while in wait mode. 1 Stop the input clock to the prescaler whenever the MCU is in wait mode.
2 PFREZ	**PWM Counters Stop in Freeze Mode** — In freeze mode, there is an option to disable the input clock to the prescaler by setting the PFRZ bit in the PWMCTL register. If this bit is set, whenever the MCU is in freeze mode, the input clock to the prescaler is disabled. This feature is useful during emulation as it allows the PWM function to be suspended. In this way, the counters of the PWM can be stopped while in freeze mode so that once normal program flow is continued, the counters are re-enabled to simulate real-time operations. Since the registers can still be accessed in this mode, to re-enable the prescaler clock, either disable the PFRZ bit or exit freeze mode. 0 Allow PWM to continue while in freeze mode. 1 Disable PWM input clock to the prescaler whenever the part is in freeze mode. This is useful for emulation.

8.3.2.7 Reserved Register (PWMTST)

This register is reserved for factory testing of the PWM module and is not available in normal modes.

	7	6	5	4	3	2	1	0
R	0	0	0	0	0	0	0	0
W								
Reset	0	0	0	0	0	0	0	0

= Unimplemented or Reserved

Figure 8-9. Reserved Register (PWMTST)

Read: Always read $00 in normal modes

Write: Unimplemented in normal modes

NOTE

Writing to this register when in special modes can alter the PWM functionality.

8.3.2.8 Reserved Register (PWMPRSC)

This register is reserved for factory testing of the PWM module and is not available in normal modes.

	7	6	5	4	3	2	1	0
R	0	0	0	0	0	0	0	0
W								
Reset	0	0	0	0	0	0	0	0

= Unimplemented or Reserved

Figure 8-10. Reserved Register (PWMPRSC)

Read: Always read $00 in normal modes

Write: Unimplemented in normal modes

NOTE

Writing to this register when in special modes can alter the PWM functionality.

8.3.2.9 PWM Scale A Register (PWMSCLA)

PWMSCLA is the programmable scale value used in scaling clock A to generate clock SA. Clock SA is generated by taking clock A, dividing it by the value in the PWMSCLA register and dividing that by two.

Clock SA = Clock A / (2 * PWMSCLA)

NOTE

When PWMSCLA = $00, PWMSCLA value is considered a full scale value of 256. Clock A is thus divided by 512.

Any value written to this register will cause the scale counter to load the new scale value (PWMSCLA).

	7	6	5	4	3	2	1	0
R W	Bit 7	6	5	4	3	2	1	Bit 0
Reset	0	0	0	0	0	0	0	0

Figure 8-11. PWM Scale A Register (PWMSCLA)

Read: Anytime

Write: Anytime (causes the scale counter to load the PWMSCLA value)

8.3.2.10 PWM Scale B Register (PWMSCLB)

PWMSCLB is the programmable scale value used in scaling clock B to generate clock SB. Clock SB is generated by taking clock B, dividing it by the value in the PWMSCLB register and dividing that by two.

Clock SB = Clock B / (2 * PWMSCLB)

NOTE

When PWMSCLB = $00, PWMSCLB value is considered a full scale value of 256. Clock B is thus divided by 512.

Any value written to this register will cause the scale counter to load the new scale value (PWMSCLB).

	7	6	5	4	3	2	1	0
R W	Bit 7	6	5	4	3	2	1	Bit 0
Reset	0	0	0	0	0	0	0	0

Figure 8-12. PWM Scale B Register (PWMSCLB)

Read: Anytime

Write: Anytime (causes the scale counter to load the PWMSCLB value).

8.3.2.11 Reserved Registers (PWMSCNTx)

The registers PWMSCNTA and PWMSCNTB are reserved for factory testing of the PWM module and are not available in normal modes.

	7	6	5	4	3	2	1	0
R	0	0	0	0	0	0	0	0
W								
Reset	0	0	0	0	0	0	0	0

= Unimplemented or Reserved

Figure 8-13. Reserved Registers (PWMSCNTx)

Read: Always read $00 in normal modes

Write: Unimplemented in normal modes

NOTE

Writing to these registers when in special modes can alter the PWM functionality.

8.3.2.12 PWM Channel Counter Registers (PWMCNTx)

Each channel has a dedicated 8-bit up/down counter which runs at the rate of the selected clock source. The counter can be read at any time without affecting the count or the operation of the PWM channel. In left aligned output mode, the counter counts from 0 to the value in the period register - 1. In center aligned output mode, the counter counts from 0 up to the value in the period register and then back down to 0.

Any value written to the counter causes the counter to reset to $00, the counter direction to be set to up, the immediate load of both duty and period registers with values from the buffers, and the output to change according to the polarity bit. The counter is also cleared at the end of the effective period (see Section 8.4.2.5, "Left Aligned Outputs" and Section 8.4.2.6, "Center Aligned Outputs" for more details). When the channel is disabled (PWMEx = 0), the PWMCNTx register does not count. When a channel becomes enabled (PWMEx = 1), the associated PWM counter starts at the count in the PWMCNTx register. For more detailed information on the operation of the counters, see Section 8.4.2.4, "PWM Timer Counters".

In concatenated mode, writes to the 16-bit counter by using a 16-bit access or writes to either the low or high order byte of the counter will reset the 16-bit counter. Reads of the 16-bit counter must be made by 16-bit access to maintain data coherency.

NOTE

Writing to the counter while the channel is enabled can cause an irregular PWM cycle to occur.

	7	6	5	4	3	2	1	0
R	Bit 7	6	5	4	3	2	1	Bit 0
W	0	0	0	0	0	0	0	0
Reset	0	0	0	0	0	0	0	0

Figure 8-14. PWM Channel Counter Registers (PWMCNTx)

Read: Anytime

Write: Anytime (any value written causes PWM counter to be reset to $00).

8.3.2.13 PWM Channel Period Registers (PWMPERx)

There is a dedicated period register for each channel. The value in this register determines the period of the associated PWM channel.

The period registers for each channel are double buffered so that if they change while the channel is enabled, the change will NOT take effect until one of the following occurs:

- The effective period ends
- The counter is written (counter resets to $00)
- The channel is disabled

In this way, the output of the PWM will always be either the old waveform or the new waveform, not some variation in between. If the channel is not enabled, then writes to the period register will go directly to the latches as well as the buffer.

NOTE

Reads of this register return the most recent value written. Reads do not necessarily return the value of the currently active period due to the double buffering scheme.

See Section 8.4.2.3, “PWM Period and Duty” for more information.

To calculate the output period, take the selected clock source period for the channel of interest (A, B, SA, or SB) and multiply it by the value in the period register for that channel:

- Left aligned output (CAEx = 0)
- PWMx Period = Channel Clock Period * PWMPERx Center Aligned Output (CAEx = 1)

  PWMx Period = Channel Clock Period * (2 * PWMPERx)

For boundary case programming values, please refer to Section 8.4.2.8, “PWM Boundary Cases”.

	7	6	5	4	3	2	1	0
R W	Bit 7	6	5	4	3	2	1	Bit 0
Reset	1	1	1	1	1	1	1	1

Figure 8-15. PWM Channel Period Registers (PWMPERx)

Read: Anytime

Write: Anytime

8.3.2.14 PWM Channel Duty Registers (PWMDTYx)

There is a dedicated duty register for each channel. The value in this register determines the duty of the associated PWM channel. The duty value is compared to the counter and if it is equal to the counter value a match occurs and the output changes state.

The duty registers for each channel are double buffered so that if they change while the channel is enabled, the change will NOT take effect until one of the following occurs:

- The effective period ends
- The counter is written (counter resets to $00)
- The channel is disabled

In this way, the output of the PWM will always be either the old duty waveform or the new duty waveform, not some variation in between. If the channel is not enabled, then writes to the duty register will go directly to the latches as well as the buffer.

NOTE

Reads of this register return the most recent value written. Reads do not necessarily return the value of the currently active duty due to the double buffering scheme.

See Section 8.4.2.3, “PWM Period and Duty” for more information.

NOTE

Depending on the polarity bit, the duty registers will contain the count of either the high time or the low time. If the polarity bit is one, the output starts high and then goes low when the duty count is reached, so the duty registers contain a count of the high time. If the polarity bit is zero, the output starts low and then goes high when the duty count is reached, so the duty registers contain a count of the low time.

To calculate the output duty cycle (high time as a% of period) for a particular channel:

- Polarity = 0 (PPOL x =0)

  Duty Cycle = [(PWMPERx-PWMDTYx)/PWMPERx] * 100%
- Polarity = 1 (PPOLx = 1)

  Duty Cycle = [PWMDTYx / PWMPERx] * 100%

For boundary case programming values, please refer to Section 8.4.2.8, “PWM Boundary Cases”.

	7	6	5	4	3	2	1	0
R/W	Bit 7	6	5	4	3	2	1	Bit 0
Reset	1	1	1	1	1	1	1	1

Figure 8-16. PWM Channel Duty Registers (PWMDTYx)

Read: Anytime

Write: Anytime

8.3.2.15 PWM Shutdown Register (PWMSDN)

The PWMSDN register provides for the shutdown functionality of the PWM module in the emergency cases. For proper operation, channel 7 must be driven to the active level for a minimum of two bus clocks.

	7	6	5	4	3	2	1	0
R	PWMIF	PWMIE	0	PWMLVL	0	PWM7IN	PWM7INL	PWM7ENA
W			PWMRSTRT					
Reset	0	0	0	0	0	0	0	0

= Unimplemented or Reserved

Figure 8-17. PWM Shutdown Register (PWMSDN)

Read: Anytime

Write: Anytime

Table 8-9. PWMSDN Field Descriptions

Field	Description
7 PWMIF	**PWM Interrupt Flag** — Any change from passive to asserted (active) state or from active to passive state will be flagged by setting the PWMIF flag = 1. The flag is cleared by writing a logic 1 to it. Writing a 0 has no effect. 0 No change on PWM7IN input. 1 Change on PWM7IN input
6 PWMIE	**PWM Interrupt Enable** — If interrupt is enabled an interrupt to the CPU is asserted. 0 PWM interrupt is disabled. 1 PWM interrupt is enabled.
5 PWMRSTRT	**PWM Restart** — The PWM can only be restarted if the PWM channel input 7 is de-asserted. After writing a logic 1 to the PWMRSTRT bit (trigger event) the PWM channels start running after the corresponding counter passes next “counter == 0” phase. Also, if the PWM7ENA bit is reset to 0, the PWM do not start before the counter passes $00. The bit is always read as “0”.
4 PWMLVL	**PWM Shutdown Output Level** If active level as defined by the PWM7IN input, gets asserted all enabled PWM channels are immediately driven to the level defined by PWMLVL. 0 PWM outputs are forced to 0 1 Outputs are forced to 1.
2 PWM7IN	**PWM Channel 7 Input Status** — This reflects the current status of the PWM7 pin.
1 PWM7INL	**PWM Shutdown Active Input Level for Channel 7** — If the emergency shutdown feature is enabled (PWM7ENA = 1), this bit determines the active level of the PWM7channel. 0 Active level is low 1 Active level is high
0 PWM7ENA	**PWM Emergency Shutdown Enable** — If this bit is logic 1, the pin associated with channel 7 is forced to input and the emergency shutdown feature is enabled. All the other bits in this register are meaningful only if PWM7ENA = 1. 0 PWM emergency feature disabled. 1 PWM emergency feature is enabled.

8.4 Functional Description

8.4.1 PWM Clock Select

There are four available clocks: clock A, clock B, clock SA (scaled A), and clock SB (scaled B). These four clocks are based on the bus clock.

Clock A and B can be software selected to be 1, 1/2, 1/4, 1/8,..., 1/64, 1/128 times the bus clock. Clock SA uses clock A as an input and divides it further with a reloadable counter. Similarly, clock SB uses clock B as an input and divides it further with a reloadable counter. The rates available for clock SA are software selectable to be clock A divided by 2, 4, 6, 8,..., or 512 in increments of divide by 2. Similar rates are available for clock SB. Each PWM channel has the capability of selecting one of two clocks, either the pre-scaled clock (clock A or B) or the scaled clock (clock SA or SB).

The block diagram in Figure 8-18 shows the four different clocks and how the scaled clocks are created.

8.4.1.1 Prescale

The input clock to the PWM prescaler is the bus clock. It can be disabled whenever the part is in freeze mode by setting the PFRZ bit in the PWMCTL register. If this bit is set, whenever the MCU is in freeze mode (freeze mode signal active) the input clock to the prescaler is disabled. This is useful for emulation in order to freeze the PWM. The input clock can also be disabled when all eight PWM channels are disabled (PWME7-0 = 0). This is useful for reducing power by disabling the prescale counter.

Clock A and clock B are scaled values of the input clock. The value is software selectable for both clock A and clock B and has options of 1, 1/2, 1/4, 1/8, 1/16, 1/32, 1/64, or 1/128 times the bus clock. The value selected for clock A is determined by the PCKA2, PCKA1, PCKA0 bits in the PWMPRCLK register. The value selected for clock B is determined by the PCKB2, PCKB1, PCKB0 bits also in the PWMPRCLK register.

8.4.1.2 Clock Scale

The scaled A clock uses clock A as an input and divides it further with a user programmable value and then divides this by 2. The scaled B clock uses clock B as an input and divides it further with a user programmable value and then divides this by 2. The rates available for clock SA are software selectable to be clock A divided by 2, 4, 6, 8,..., or 512 in increments of divide by 2. Similar rates are available for clock SB.

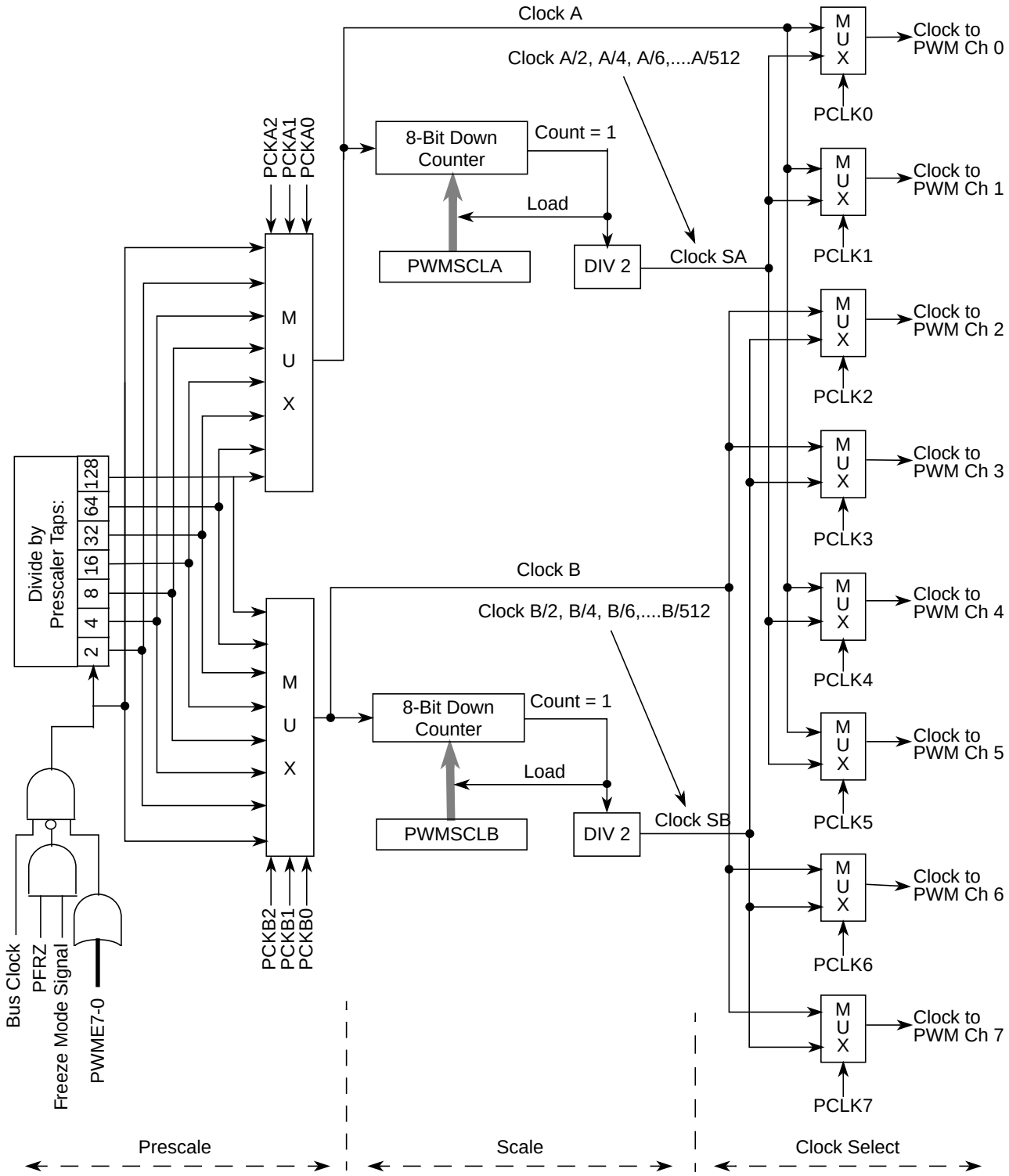

Figure 8-18. PWM Clock Select Block Diagram

Clock A is used as an input to an 8-bit down counter. This down counter loads a user programmable scale value from the scale register (PWMSCLA). When the down counter reaches one, a pulse is output and the 8-bit counter is re-loaded. The output signal from this circuit is further divided by two. This gives a greater range with only a slight reduction in granularity. Clock SA equals clock A divided by two times the value in the PWMSCLA register.

NOTE

Clock SA = Clock A / (2 * PWMSCLA)

When PWMSCLA = $00, PWMSCLA value is considered a full scale value of 256. Clock A is thus divided by 512.

Similarly, clock B is used as an input to an 8-bit down counter followed by a divide by two producing clock SB. Thus, clock SB equals clock B divided by two times the value in the PWMSCLB register.

NOTE

Clock SB = Clock B / (2 * PWMSCLB)

When PWMSCLB = $00, PWMSCLB value is considered a full scale value of 256. Clock B is thus divided by 512.

As an example, consider the case in which the user writes $FF into the PWMSCLA register. Clock A for this case will be E divided by 4. A pulse will occur at a rate of once every 255x4 E cycles. Passing this through the divide by two circuit produces a clock signal at an E divided by 2040 rate. Similarly, a value of $01 in the PWMSCLA register when clock A is E divided by 4 will produce a clock at an E divided by 8 rate.

Writing to PWMSCLA or PWMSCLB causes the associated 8-bit down counter to be re-loaded. Otherwise, when changing rates the counter would have to count down to $01 before counting at the proper rate. Forcing the associated counter to re-load the scale register value every time PWMSCLA or PWMSCLB is written prevents this.

NOTE

Writing to the scale registers while channels are operating can cause irregularities in the PWM outputs.

8.4.1.3 Clock Select

Each PWM channel has the capability of selecting one of two clocks. For channels 0, 1, 4, and 5 the clock choices are clock A or clock SA. For channels 2, 3, 6, and 7 the choices are clock B or clock SB. The clock selection is done with the PCLKx control bits in the PWMCLK register.

NOTE

Changing clock control bits while channels are operating can cause irregularities in the PWM outputs.

8.4.2 PWM Channel Timers

The main part of the PWM module are the actual timers. Each of the timer channels has a counter, a period register and a duty register (each are 8-bit). The waveform output period is controlled by a match between the period register and the value in the counter. The duty is controlled by a match between the duty register and the counter value and causes the state of the output to change during the period. The starting polarity of the output is also selectable on a per channel basis. Shown below in Figure 8-19 is the block diagram for the PWM timer.

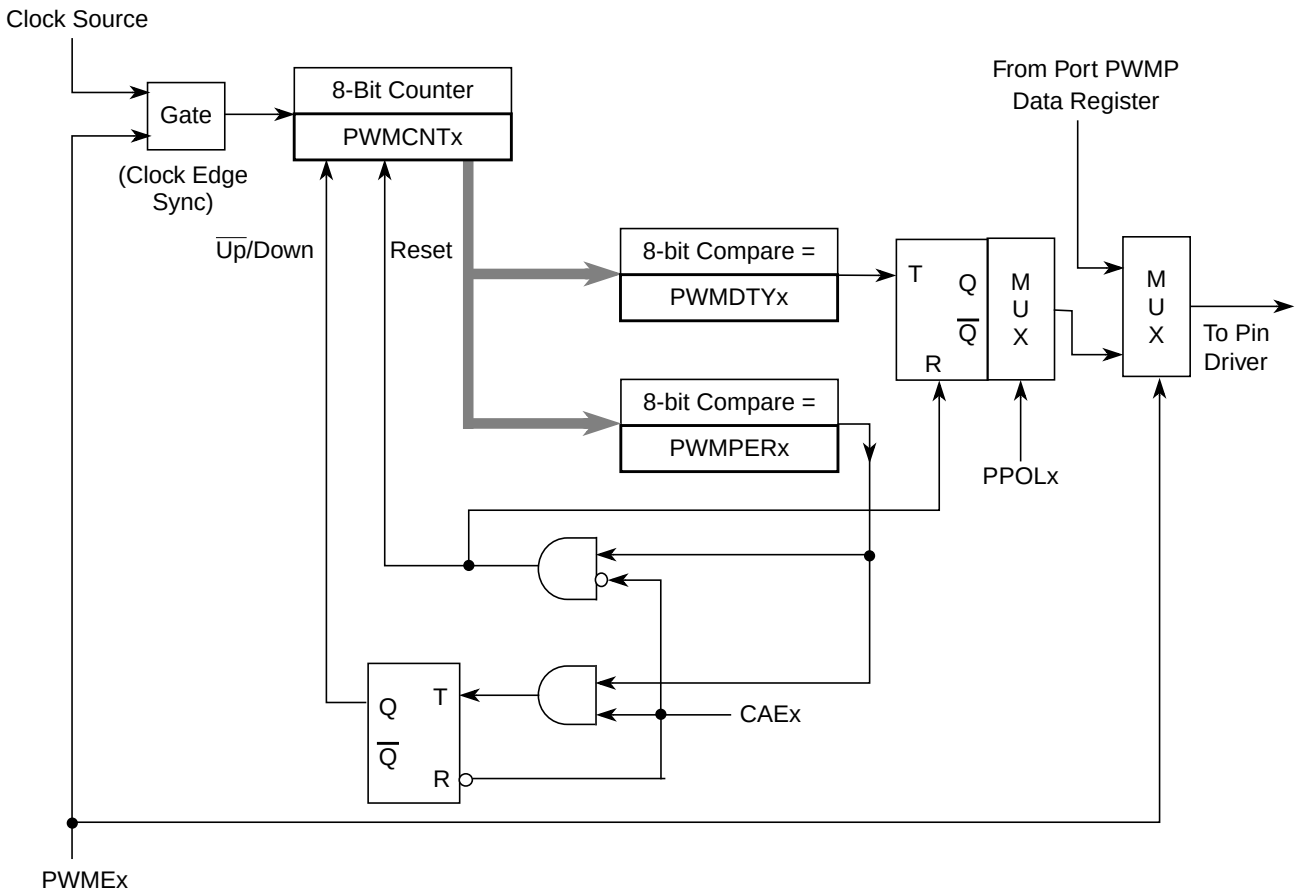

Figure 8-19. PWM Timer Channel Block Diagram

8.4.2.1 PWM Enable

Each PWM channel has an enable bit (PWMEx) to start its waveform output. When any of the PWMEx bits are set (PWMEx = 1), the associated PWM output signal is enabled immediately. However, the actual PWM waveform is not available on the associated PWM output until its clock source begins its next cycle due to the synchronization of PWMEx and the clock source. An exception to this is when channels are concatenated. Refer to Section 8.4.2.7, “PWM 16-Bit Functions” for more detail.

NOTE

The first PWM cycle after enabling the channel can be irregular.

On the front end of the PWM timer, the clock is enabled to the PWM circuit by the PWMEx bit being high. There is an edge-synchronizing circuit to guarantee that the clock will only be enabled or disabled at an edge. When the channel is disabled (PWMEx = 0), the counter for the channel does not count.

8.4.2.2 PWM Polarity

Each channel has a polarity bit to allow starting a waveform cycle with a high or low signal. This is shown on the block diagram as a mux select of either the Q output or the $\overline{Q}$ output of the PWM output flip flop. When one of the bits in the PWMPOL register is set, the associated PWM channel output is high at the beginning of the waveform, then goes low when the duty count is reached. Conversely, if the polarity bit is zero, the output starts low and then goes high when the duty count is reached.

8.4.2.3 PWM Period and Duty

Dedicated period and duty registers exist for each channel and are double buffered so that if they change while the channel is enabled, the change will NOT take effect until one of the following occurs:

- The effective period ends
- The counter is written (counter resets to $00)
- The channel is disabled

In this way, the output of the PWM will always be either the old waveform or the new waveform, not some variation in between. If the channel is not enabled, then writes to the period and duty registers will go directly to the latches as well as the buffer.

A change in duty or period can be forced into effect “immediately” by writing the new value to the duty and/or period registers and then writing to the counter. This forces the counter to reset and the new duty and/or period values to be latched. In addition, since the counter is readable, it is possible to know where the count is with respect to the duty value and software can be used to make adjustments

NOTE

When forcing a new period or duty into effect immediately, an irregular PWM cycle can occur.

Depending on the polarity bit, the duty registers will contain the count of either the high time or the low time.

8.4.2.4 PWM Timer Counters

Each channel has a dedicated 8-bit up/down counter which runs at the rate of the selected clock source (see Section 8.4.1, “PWM Clock Select” for the available clock sources and rates). The counter compares to two registers, a duty register and a period register as shown in Figure 8-19. When the PWM counter matches the duty register, the output flip-flop changes state, causing the PWM waveform to also change state. A match between the PWM counter and the period register behaves differently depending on what output mode is selected as shown in Figure 8-19 and described in Section 8.4.2.5, “Left Aligned Outputs” and Section 8.4.2.6, “Center Aligned Outputs”.

Each channel counter can be read at anytime without affecting the count or the operation of the PWM channel.

Any value written to the counter causes the counter to reset to $00, the counter direction to be set to up, the immediate load of both duty and period registers with values from the buffers, and the output to change according to the polarity bit. When the channel is disabled (PWMEx = 0), the counter stops. When a channel becomes enabled (PWMEx = 1), the associated PWM counter continues from the count in the PWMCNTx register. This allows the waveform to continue where it left off when the channel is re-enabled. When the channel is disabled, writing “0” to the period register will cause the counter to reset on the next selected clock.

NOTE

If the user wants to start a new “clean” PWM waveform without any “history” from the old waveform, the user must write to channel counter (PWMCNTx) prior to enabling the PWM channel (PWMEx = 1).

Generally, writes to the counter are done prior to enabling a channel in order to start from a known state. However, writing a counter can also be done while the PWM channel is enabled (counting). The effect is similar to writing the counter when the channel is disabled, except that the new period is started immediately with the output set according to the polarity bit.

NOTE

Writing to the counter while the channel is enabled can cause an irregular PWM cycle to occur.

The counter is cleared at the end of the effective period (see Section 8.4.2.5, “Left Aligned Outputs” and Section 8.4.2.6, “Center Aligned Outputs” for more details).

Table 8-10. PWM Timer Counter Conditions

Counter Clears ($00)	Counter Counts	Counter Stops
When PWMCNTx register written to any value	When PWM channel is enabled (PWMEx = 1). Counts from last value in PWMCNTx.	When PWM channel is disabled (PWMEx = 0)
Effective period ends		

8.4.2.5 Left Aligned Outputs

The PWM timer provides the choice of two types of outputs, left aligned or center aligned. They are selected with the CAEx bits in the PWMCAE register. If the CAEx bit is cleared (CAEx = 0), the corresponding PWM output will be left aligned.

In left aligned output mode, the 8-bit counter is configured as an up counter only. It compares to two registers, a duty register and a period register as shown in the block diagram in Figure 8-19. When the PWM counter matches the duty register the output flip-flop changes state causing the PWM waveform to also change state. A match between the PWM counter and the period register resets the counter and the output flip-flop, as shown in Figure 8-19, as well as performing a load from the double buffer period and duty register to the associated registers, as described in Section 8.4.2.3, “PWM Period and Duty”. The counter counts from 0 to the value in the period register – 1.

NOTE

Changing the PWM output mode from left aligned to center aligned output (or vice versa) while channels are operating can cause irregularities in the PWM output. It is recommended to program the output mode before enabling the PWM channel.

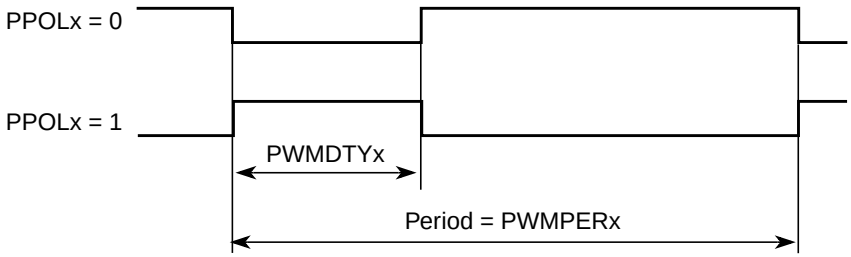

Figure 8-20. PWM Left Aligned Output Waveform

To calculate the output frequency in left aligned output mode for a particular channel, take the selected clock source frequency for the channel (A, B, SA, or SB) and divide it by the value in the period register for that channel.

- PWMx Frequency = Clock (A, B, SA, or SB) / PWMPERx
- PWMx Duty Cycle (high time as a% of period):
  - Polarity = 0 (PPOLx = 0)
- Duty Cycle = [(PWMPERx-PWMDTYx)/PWMPERx] * 100%
  - Polarity = 1 (PPOLx = 1)

Duty Cycle = [PWMDTYx / PWMPERx] * 100%

As an example of a left aligned output, consider the following case:

Clock Source = E, where E = 10 MHz (100 ns period)

PPOLx = 0

PWMPERx = 4

PWMDTYx = 1

PWMx Frequency = 10 MHz/4 = 2.5 MHz

PWMx Period = 400 ns

PWMx Duty Cycle = 3/4 *100% = 75%

The output waveform generated is shown in Figure 8-21.

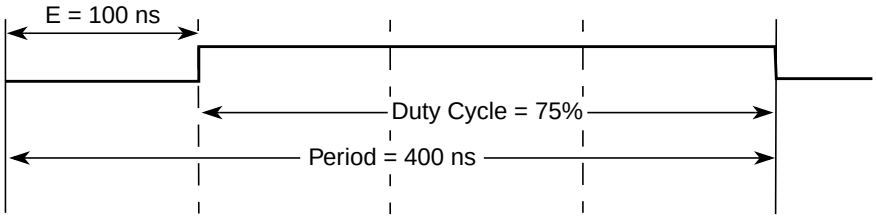

Figure 8-21. PWM Left Aligned Output Example Waveform

8.4.2.6 Center Aligned Outputs

For center aligned output mode selection, set the CAEx bit (CAEx = 1) in the PWMCAE register and the corresponding PWM output will be center aligned.

The 8-bit counter operates as an up/down counter in this mode and is set to up whenever the counter is equal to $00. The counter compares to two registers, a duty register and a period register as shown in the block diagram in Figure 8-19. When the PWM counter matches the duty register, the output flip-flop changes state, causing the PWM waveform to also change state. A match between the PWM counter and the period register changes the counter direction from an up-count to a down-count. When the PWM counter decrements and matches the duty register again, the output flip-flop changes state causing the PWM output to also change state. When the PWM counter decrements and reaches zero, the counter direction changes from a down-count back to an up-count and a load from the double buffer period and duty registers to the associated registers is performed, as described in Section 8.4.2.3, “PWM Period and Duty”. The counter counts from 0 up to the value in the period register and then back down to 0. Thus the effective period is PWMPERx*2.

NOTE

Changing the PWM output mode from left aligned to center aligned output (or vice versa) while channels are operating can cause irregularities in the PWM output. It is recommended to program the output mode before enabling the PWM channel.

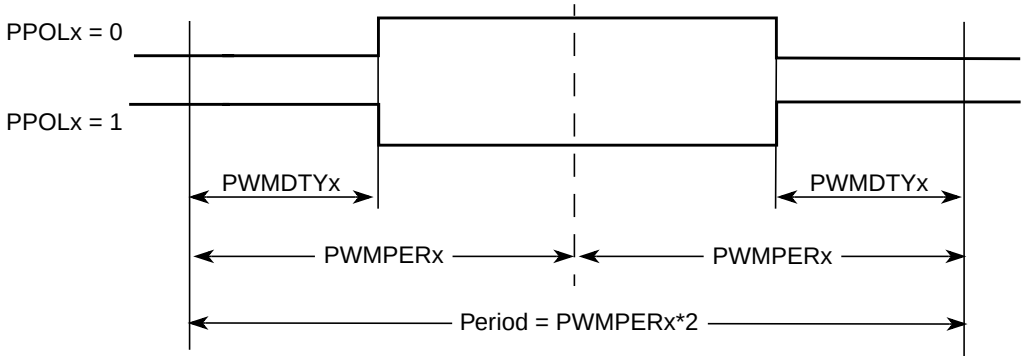

Figure 8-22. PWM Center Aligned Output Waveform

To calculate the output frequency in center aligned output mode for a particular channel, take the selected clock source frequency for the channel (A, B, SA, or SB) and divide it by twice the value in the period register for that channel.

- PWMx Frequency = Clock (A, B, SA, or SB) / (2*PWMPERx)
- PWMx Duty Cycle (high time as a% of period):
  - Polarity = 0 (PPOLx = 0)

    Duty Cycle = [(PWMPERx-PWMDTYx)/PWMPERx] * 100%
  - Polarity = 1 (PPOLx = 1)

    Duty Cycle = [PWMDTYx / PWMPERx] * 100%

As an example of a center aligned output, consider the following case:

Clock Source = E, where E = 10 MHz (100 ns period)

PPOLx = 0

PWMPERx = 4

PWMDTYx = 1

PWMx Frequency = 10 MHz/8 = 1.25 MHz

PWMx Period = 800 ns

PWMx Duty Cycle = 3/4 *100% = 75%

Shown in Figure 8-23 is the output waveform generated.

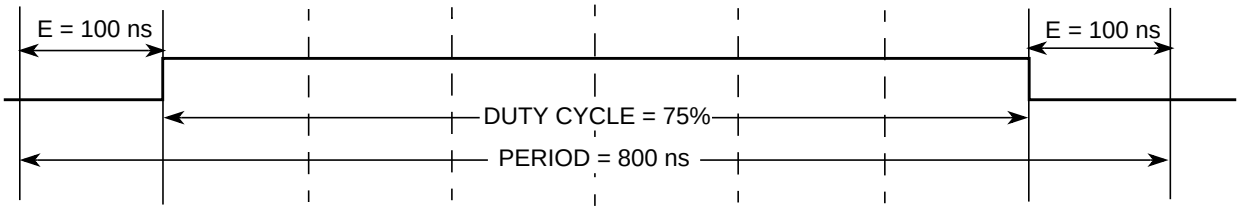

Figure 8-23. PWM Center Aligned Output Example Waveform

8.4.2.7 PWM 16-Bit Functions

The PWM timer also has the option of generating 8-channels of 8-bits or 4-channels of 16-bits for greater PWM resolution. This 16-bit channel option is achieved through the concatenation of two 8-bit channels.

The PWMCTL register contains four control bits, each of which is used to concatenate a pair of PWM channels into one 16-bit channel. Channels 6 and 7 are concatenated with the CON67 bit, channels 4 and 5 are concatenated with the CON45 bit, channels 2 and 3 are concatenated with the CON23 bit, and channels 0 and 1 are concatenated with the CON01 bit.

NOTE

Change these bits only when both corresponding channels are disabled.

When channels 6 and 7 are concatenated, channel 6 registers become the high order bytes of the double byte channel, as shown in Figure 8-24. Similarly, when channels 4 and 5 are concatenated, channel 4 registers become the high order bytes of the double byte channel. When channels 2 and 3 are concatenated, channel 2 registers become the high order bytes of the double byte channel. When channels 0 and 1 are concatenated, channel 0 registers become the high order bytes of the double byte channel.

When using the 16-bit concatenated mode, the clock source is determined by the low order 8-bit channel clock select control bits. That is channel 7 when channels 6 and 7 are concatenated, channel 5 when channels 4 and 5 are concatenated, channel 3 when channels 2 and 3 are concatenated, and channel 1 when channels 0 and 1 are concatenated. The resulting PWM is output to the pins of the corresponding low order 8-bit channel as also shown in Figure 8-24. The polarity of the resulting PWM output is controlled by the PPOLx bit of the corresponding low order 8-bit channel as well.

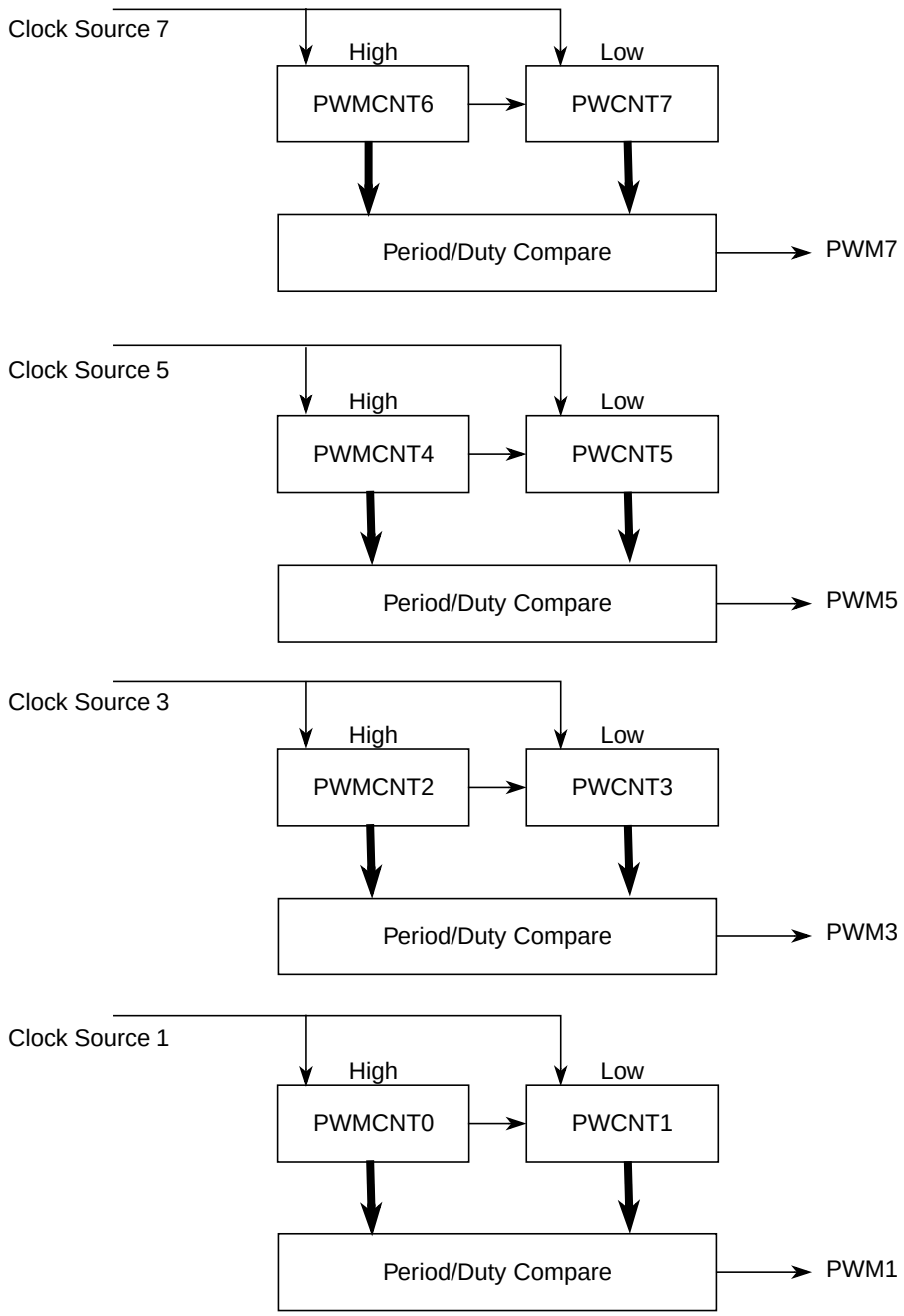

Figure 8-24. PWM 16-Bit Mode

Once concatenated mode is enabled (CONxx bits set in PWMCTL register), enabling/disabling the corresponding 16-bit PWM channel is controlled by the low order PWMEx bit. In this case, the high order bytes PWMEx bits have no effect and their corresponding PWM output is disabled.

In concatenated mode, writes to the 16-bit counter by using a 16-bit access or writes to either the low or high order byte of the counter will reset the 16-bit counter. Reads of the 16-bit counter must be made by 16-bit access to maintain data coherency.

Either left aligned or center aligned output mode can be used in concatenated mode and is controlled by the low order CAEx bit. The high order CAEx bit has no effect.

Table 8-11 is used to summarize which channels are used to set the various control bits when in 16-bit mode.

Table 8-11. 16-bit Concatenation Mode Summary

CONxx	PWMEx	PPOLx	PCLKx	CAEx	PWMx Output
CON67	PWME7	PPOL7	PCLK7	CAE7	PWM7
CON45	PWME5	PPOL5	PCLK5	CAE5	PWM5
CON23	PWME3	PPOL3	PCLK3	CAE3	PWM3
CON01	PWME1	PPOL1	PCLK1	CAE1	PWM1

8.4.2.8 PWM Boundary Cases

Table 8-12 summarizes the boundary conditions for the PWM regardless of the output mode (left aligned or center aligned) and 8-bit (normal) or 16-bit (concatenation).

Table 8-12. PWM Boundary Cases

PWMDTYx	PWMPERx	PPOLx	PWMx Output
$00 (indicates no duty)	>$00	1	Always low
$00 (indicates no duty)	>$00	0	Always high
XX	$00[1] (indicates no period)	1	Always high
XX	$00[1] (indicates no period)	0	Always low
>= PWMPERx	XX	1	Always high
>= PWMPERx	XX	0	Always low

[1] Counter = $00 and does not count.

8.5 Resets

The reset state of each individual bit is listed within the Section 8.3.2, “Register Descriptions” which details the registers and their bit-fields. All special functions or modes which are initialized during or just following reset are described within this section.

- The 8-bit up/down counter is configured as an up counter out of reset.
- All the channels are disabled and all the counters do not count.

8.6 Interrupts

The PWM module has only one interrupt which is generated at the time of emergency shutdown, if the corresponding enable bit (PWMIE) is set. This bit is the enable for the interrupt. The interrupt flag PWMIF is set whenever the input level of the PWM7 channel changes while PWM7ENA = 1 or when PWMENA is being asserted while the level at PWM7 is active.

In stop mode or wait mode (with the PSWAI bit set), the emergency shutdown feature will drive the PWM outputs to their shutdown output levels but the PWMIF flag will not be set.

A description of the registers involved and affected due to this interrupt is explained in Section 8.3.2.15, “PWM Shutdown Register (PWMSDN)”.

The PWM block only generates the interrupt and does not service it. The interrupt signal name is PWM interrupt signal.

Chapter 9
Inter-Integrated Circuit (IICV2) Block Description

9.1 Introduction

The inter-IC bus (IIC) is a two-wire, bidirectional serial bus that provides a simple, efficient method of data exchange between devices. Being a two-wire device, the IIC bus minimizes the need for large numbers of connections between devices, and eliminates the need for an address decoder.

This bus is suitable for applications requiring occasional communications over a short distance between a number of devices. It also provides flexibility, allowing additional devices to be connected to the bus for further expansion and system development.

The interface is designed to operate up to 100 kbps with maximum bus loading and timing. The device is capable of operating at higher baud rates, up to a maximum of clock/20, with reduced bus loading. The maximum communication length and the number of devices that can be connected are limited by a maximum bus capacitance of 400 pF.

9.1.1 Features

The IIC module has the following key features:

- Compatible with I2C bus standard
- Multi-master operation
- Software programmable for one of 256 different serial clock frequencies
- Software selectable acknowledge bit
- Interrupt driven byte-by-byte data transfer
- Arbitration lost interrupt with automatic mode switching from master to slave
- Calling address identification interrupt
- Start and stop signal generation/detection
- Repeated start signal generation
- Acknowledge bit generation/detection
- Bus busy detection

9.1.2 Modes of Operation

The IIC functions the same in normal, special, and emulation modes. It has two low power modes: wait and stop modes.

9.1.3 Block Diagram

The block diagram of the IIC module is shown in Figure 9-1.

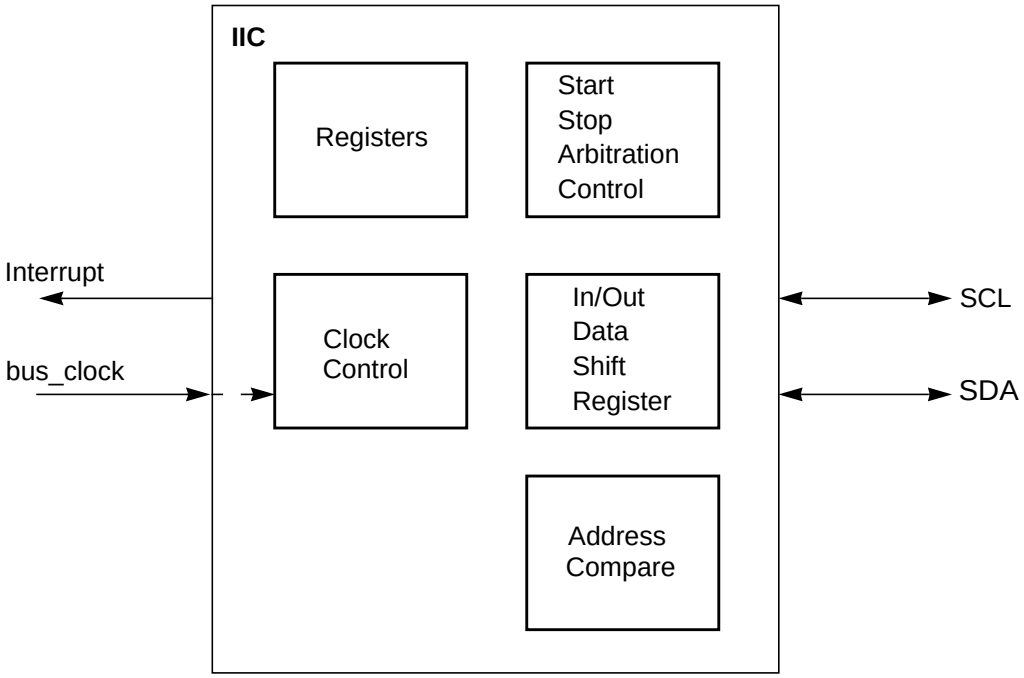

Figure 9-1. IIC Block Diagram

9.2 External Signal Description

The IICV2 module has two external pins.

9.2.1 IIC_SCL — Serial Clock Line Pin

This is the bidirectional serial clock line (SCL) of the module, compatible to the IIC bus specification.

9.2.2 IIC_SDA — Serial Data Line Pin

This is the bidirectional serial data line (SDA) of the module, compatible to the IIC bus specification.

9.3 Memory Map and Register Definition

This section provides a detailed description of all memory and registers for the IIC module.

9.3.1 Module Memory Map

The memory map for the IIC module is given below in Table 1-1. The address listed for each register is the address offset.The total address for each register is the sum of the base address for the IIC module and the address offset for each register.

9.3.2 Register Descriptions

This section consists of register descriptions in address order. Each description includes a standard register diagram with an associated figure number. Details of register bit and field function follow the register diagrams, in bit order.

Register Name		Bit 7	6	5	4	3	2	1	Bit 0
IBAD	R	ADR7	ADR6	ADR5	ADR4	ADR3	ADR2	ADR1	0
	W								
IBFD	R	IBC7	IBC6	IBC5	IBC4	IBC3	IBC2	IBC1	IBC0
	W								
IBCR	R	IBEN	IBIE	MS/$\overline{SL}$	Tx/$\overline{Rx}$	TXAK	0	0	IBSWAI
	W						RSTA		
IBSR	R	TCF	IAAS	IBB	IBAL	0	SRW	IBIF	RXAK
	W								
IBDR	R	D7	D6	D5	D4	D3	D2	D1	D0
	W								

= Unimplemented or Reserved

Figure 9-2. IIC Register Summary

9.3.2.1 IIC Address Register (IBAD)

	7	6	5	4	3	2	1	0
R	ADR7	ADR6	ADR5	ADR4	ADR3	ADR2	ADR1	0
W								
Reset	0	0	0	0	0	0	0	0

= Unimplemented or Reserved

Figure 9-3. IIC Bus Address Register (IBAD)

Read and write anytime

This register contains the address the IIC bus will respond to when addressed as a slave; note that it is not the address sent on the bus during the address transfer.

Table 9-1. IBAD Field Descriptions

Field	Description
7:1 ADR[7:1]	**Slave Address** — Bit 1 to bit 7 contain the specific slave address to be used by the IIC bus module.The default mode of IIC bus is slave mode for an address match on the bus.
0 Reserved	Reserved — Bit 0 of the IBAD is reserved for future compatibility. This bit will always read 0.

9.3.2.2 IIC Frequency Divider Register (IBFD)

	7	6	5	4	3	2	1	0
R W	IBC7	IBC6	IBC5	IBC4	IBC3	IBC2	IBC1	IBC0
Reset	0	0	0	0	0	0	0	0

= Unimplemented or Reserved

Figure 9-4. IIC Bus Frequency Divider Register (IBFD)

Read and write anytime

Table 9-2. IBFD Field Descriptions

Field	Description
7:0 IBC[7:0]	**I Bus Clock Rate 7:0** — This field is used to prescale the clock for bit rate selection. The bit clock generator is implemented as a prescale divider — IBC7:6, prescaled shift register — IBC5:3 select the prescaler divider and IBC2-0 select the shift register tap point. The IBC bits are decoded to give the tap and prescale values as shown in Table 9-3.

Table 9-3. I-Bus Tap and Prescale Values

IBC2-0 (bin)	SCL Tap (clocks)	SDA Tap (clocks)
000	5	1
001	6	1
010	7	2
011	8	2
100	9	3
101	10	3
110	12	4
111	15	4

IBC5-3 (bin)	scl2start (clocks)	scl2stop (clocks)	scl2tap (clocks)	tap2tap (clocks)
000	2	7	4	1
001	2	7	4	2
010	2	9	6	4
011	6	9	6	8
100	14	17	14	16
101	30	33	30	32
110	62	65	62	64
111	126	129	126	128

Table 9-4. Multiplier Factor

IBC7-6	MUL
00	01
01	02
10	04
11	RESERVED

The number of clocks from the falling edge of SCL to the first tap (Tap[1]) is defined by the values shown in the scl2tap column of Table 9-3, all subsequent tap points are separated by 2^{IBC5-3} as shown in the tap2tap column in Table 9-3. The SCL Tap is used to generated the SCL period and the SDA Tap is used to determine the delay from the falling edge of SCL to SDA changing, the SDA hold time.

IBC7–6 defines the multiplier factor MUL. The values of MUL are shown in the Table 9-4.

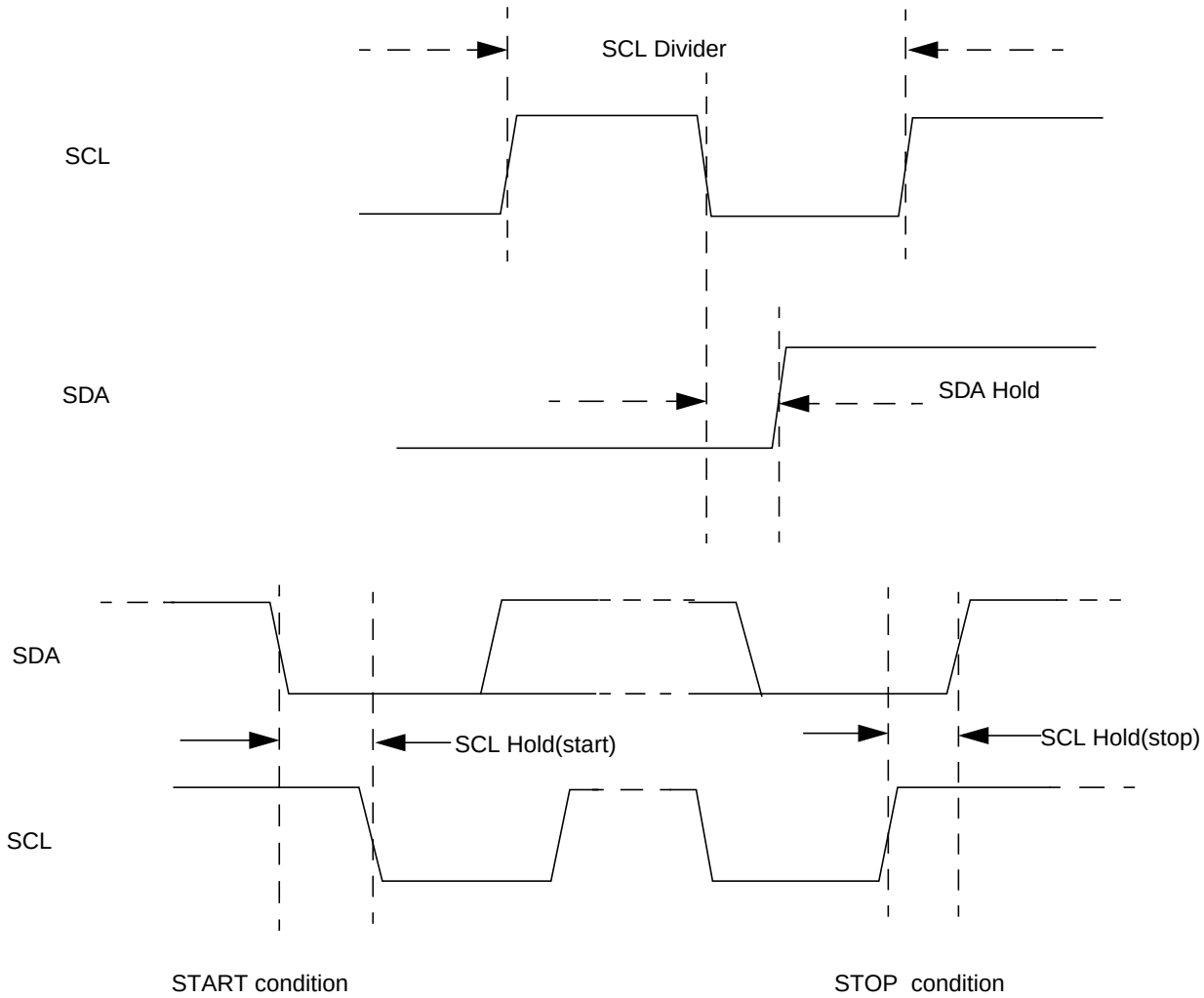

Figure 9-5. SCL Divider and SDA Hold

The equation used to generate the divider values from the IBFD bits is:

SCL Divider = MUL x {2 x (scl2tap + [(SCL_Tap -1) x tap2tap] + 2)}

The SDA hold delay is equal to the CPU clock period multiplied by the SDA Hold value shown in Table 9-5. The equation used to generate the SDA Hold value from the IBFD bits is:

SDA Hold = MUL x {scl2tap + [(SDA_Tap - 1) x tap2tap] + 3}

The equation for SCL Hold values to generate the start and stop conditions from the IBFD bits is:

SCL Hold(start) = MUL x [scl2start + (SCL_Tap - 1) x tap2tap]

SCL Hold(stop) = MUL x [scl2stop + (SCL_Tap - 1) x tap2tap]

Table 9-5. IIC Divider and Hold Values (Sheet 1 of 5)

IBC[7:0] (hex)	SCL Divider (clocks)	SDA Hold (clocks)	SCL Hold (start)	SCL Hold (stop)
MUL=1				
00	20	7	6	11
01	22	7	7	12
02	24	8	8	13
03	26	8	9	14
04	28	9	10	15
05	30	9	11	16
06	34	10	13	18
07	40	10	16	21
08	28	7	10	15
09	32	7	12	17
0A	36	9	14	19
0B	40	9	16	21
0C	44	11	18	23
0D	48	11	20	25
0E	56	13	24	29
0F	68	13	30	35
10	48	9	18	25
11	56	9	22	29
12	64	13	26	33
13	72	13	30	37
14	80	17	34	41
15	88	17	38	45
16	104	21	46	53
17	128	21	58	65
18	80	9	38	41
19	96	9	46	49
1A	112	17	54	57
1B	128	17	62	65
1C	144	25	70	73
1D	160	25	78	81
1E	192	33	94	97
1F	240	33	118	121
20	160	17	78	81
21	192	17	94	97
22	224	33	110	113

Table 9-5. IIC Divider and Hold Values (Sheet 2 of 5)

IBC[7:0] (hex)	SCL Divider (clocks)	SDA Hold (clocks)	SCL Hold (start)	SCL Hold (stop)
23	256	33	126	129
24	288	49	142	145
25	320	49	158	161
26	384	65	190	193
27	480	65	238	241
28	320	33	158	161
29	384	33	190	193
2A	448	65	222	225
2B	512	65	254	257
2C	576	97	286	289
2D	640	97	318	321
2E	768	129	382	385
2F	960	129	478	481
30	640	65	318	321
31	768	65	382	385
32	896	129	446	449
33	1024	129	510	513
34	1152	193	574	577
35	1280	193	638	641
36	1536	257	766	769
37	1920	257	958	961
38	1280	129	638	641
39	1536	129	766	769
3A	1792	257	894	897
3B	2048	257	1022	1025
3C	2304	385	1150	1153
3D	2560	385	1278	1281
3E	3072	513	1534	1537
3F	3840	513	1918	1921
MUL=2				
40	40	14	12	22
41	44	14	14	24
42	48	16	16	26
43	52	16	18	28
44	56	18	20	30
45	60	18	22	32
46	68	20	26	36
47	80	20	32	42
48	56	14	20	30
49	64	14	24	34
4A	72	18	28	38
4B	80	18	32	42
4C	88	22	36	46
4D	96	22	40	50
4E	112	26	48	58

Table 9-5. IIC Divider and Hold Values (Sheet 3 of 5)

IBC[7:0] (hex)	SCL Divider (clocks)	SDA Hold (clocks)	SCL Hold (start)	SCL Hold (stop)
4F	136	26	60	70
50	96	18	36	50
51	112	18	44	58
52	128	26	52	66
53	144	26	60	74
54	160	34	68	82
55	176	34	76	90
56	208	42	92	106
57	256	42	116	130
58	160	18	76	82
59	192	18	92	98
5A	224	34	108	114
5B	256	34	124	130
5C	288	50	140	146
5D	320	50	156	162
5E	384	66	188	194
5F	480	66	236	242
60	320	34	156	162
61	384	34	188	194
62	448	66	220	226
63	512	66	252	258
64	576	98	284	290
65	640	98	316	322
66	768	130	380	386
67	960	130	476	482
68	640	66	316	322
69	768	66	380	386
6A	896	130	444	450
6B	1024	130	508	514
6C	1152	194	572	578
6D	1280	194	636	642
6E	1536	258	764	770
6F	1920	258	956	962
70	1280	130	636	642
71	1536	130	764	770
72	1792	258	892	898
73	2048	258	1020	1026
74	2304	386	1148	1154
75	2560	386	1276	1282
76	3072	514	1532	1538
77	3840	514	1916	1922
78	2560	258	1276	1282
79	3072	258	1532	1538
7A	3584	514	1788	1794
7B	4096	514	2044	2050

Table 9-5. IIC Divider and Hold Values (Sheet 4 of 5)

IBC[7:0] (hex)	SCL Divider (clocks)	SDA Hold (clocks)	SCL Hold (start)	SCL Hold (stop)
7C	4608	770	2300	2306
7D	5120	770	2556	2562
7E	6144	1026	3068	3074
7F	7680	1026	3836	3842
MUL=4				
80	80	28	24	44
81	88	28	28	48
82	96	32	32	52
83	104	32	36	56
84	112	36	40	60
85	120	36	44	64
86	136	40	52	72
87	160	40	64	84
88	112	28	40	60
89	128	28	48	68
8A	144	36	56	76
8B	160	36	64	84
8C	176	44	72	92
8D	192	44	80	100
8E	224	52	96	116
8F	272	52	120	140
90	192	36	72	100
91	224	36	88	116
92	256	52	104	132
93	288	52	120	148
94	320	68	136	164
95	352	68	152	180
96	416	84	184	212
97	512	84	232	260
98	320	36	152	164
99	384	36	184	196
9A	448	68	216	228
9B	512	68	248	260
9C	576	100	280	292
9D	640	100	312	324
9E	768	132	376	388
9F	960	132	472	484
A0	640	68	312	324
A1	768	68	376	388
A2	896	132	440	452
A3	1024	132	504	516
A4	1152	196	568	580
A5	1280	196	632	644
A6	1536	260	760	772
A7	1920	260	952	964

Table 9-5. IIC Divider and Hold Values (Sheet 5 of 5)

IBC[7:0] (hex)	SCL Divider (clocks)	SDA Hold (clocks)	SCL Hold (start)	SCL Hold (stop)
A8	1280	132	632	644
A9	1536	132	760	772
AA	1792	260	888	900
AB	2048	260	1016	1028
AC	2304	388	1144	1156
AD	2560	388	1272	1284
AE	3072	516	1528	1540
AF	3840	516	1912	1924
B0	2560	260	1272	1284
B1	3072	260	1528	1540
B2	3584	516	1784	1796
B3	4096	516	2040	2052
B4	4608	772	2296	2308
B5	5120	772	2552	2564
B6	6144	1028	3064	3076
B7	7680	1028	3832	3844
B8	5120	516	2552	2564
B9	6144	516	3064	3076
BA	7168	1028	3576	3588
BB	8192	1028	4088	4100
BC	9216	1540	4600	4612
BD	10240	1540	5112	5124
BE	12288	2052	6136	6148
BF	15360	2052	7672	7684

9.3.2.3 IIC Control Register (IBCR)

	7	6	5	4	3	2	1	0
R	IBEN	IBIE	MS/SL	Tx/Rx	TXAK	0	0	IBSWAI
W						RSTA		
Reset	0	0	0	0	0	0	0	0

= Unimplemented or Reserved

Figure 9-6. IIC Bus Control Register (IBCR)

Read and write anytime

Table 9-6. IBCR Field Descriptions

Field	Description
7 IBEN	**I-Bus Enable** — This bit controls the software reset of the entire IIC bus module. 0 The module is reset and disabled. This is the power-on reset situation. When low the interface is held in reset but registers can be accessed 1 The IIC bus module is enabled.This bit must be set before any other IBCR bits have any effect If the IIC bus module is enabled in the middle of a byte transfer the interface behaves as follows: slave mode ignores the current transfer on the bus and starts operating whenever a subsequent start condition is detected. Master mode will not be aware that the bus is busy, hence if a start cycle is initiated then the current bus cycle may become corrupt. This would ultimately result in either the current bus master or the IIC bus module losing arbitration, after which bus operation would return to normal.
6 IBIE	**I-Bus Interrupt Enable** 0 Interrupts from the IIC bus module are disabled. Note that this does not clear any currently pending interrupt condition 1 Interrupts from the IIC bus module are enabled. An IIC bus interrupt occurs provided the IBIF bit in the status register is also set.
5 MS/SL	**Master/Slave Mode Select Bit** — Upon reset, this bit is cleared. When this bit is changed from 0 to 1, a START signal is generated on the bus, and the master mode is selected. When this bit is changed from 1 to 0, a STOP signal is generated and the operation mode changes from master to slave.A STOP signal should only be generated if the IBIF flag is set. MS/$\overline{SL}$ is cleared without generating a STOP signal when the master loses arbitration. 0 Slave Mode 1 Master Mode
4 Tx/Rx	**Transmit/Receive Mode Select Bit** — This bit selects the direction of master and slave transfers. When addressed as a slave this bit should be set by software according to the SRW bit in the status register. In master mode this bit should be set according to the type of transfer required. Therefore, for address cycles, this bit will always be high. 0 Receive 1 Transmit
3 TXAK	**Transmit Acknowledge Enable** — This bit specifies the value driven onto SDA during data acknowledge cycles for both master and slave receivers. The IIC module will always acknowledge address matches, provided it is enabled, regardless of the value of TXAK. Note that values written to this bit are only used when the IIC bus is a receiver, not a transmitter. 0 An acknowledge signal will be sent out to the bus at the 9th clock bit after receiving one byte data 1 No acknowledge signal response is sent (i.e., acknowledge bit = 1)
2 RSTA	**Repeat Start** — Writing a 1 to this bit will generate a repeated START condition on the bus, provided it is the current bus master. This bit will always be read as a low. Attempting a repeated start at the wrong time, if the bus is owned by another master, will result in loss of arbitration. 1 Generate repeat start cycle
1 RESERVED	**Reserved** — Bit 1 of the IBCR is reserved for future compatibility. This bit will always read 0.
0 IBSWAI	**I Bus Interface Stop in Wait Mode** 0 IIC bus module clock operates normally 1 Halt IIC bus module clock generation in wait mode

Wait mode is entered via execution of a CPU WAI instruction. In the event that the IBSWAI bit is set, all clocks internal to the IIC will be stopped and any transmission currently in progress will halt.If the CPU were woken up by a source other than the IIC module, then clocks would restart and the IIC would resume

from where was during the previous transmission. It is not possible for the IIC to wake up the CPU when its internal clocks are stopped.

If it were the case that the IBSWAI bit was cleared when the WAI instruction was executed, the IIC internal clocks and interface would remain alive, continuing the operation which was currently underway. It is also possible to configure the IIC such that it will wake up the CPU via an interrupt at the conclusion of the current operation. See the discussion on the IBIF and IBIE bits in the IBSR and IBCR, respectively.

9.3.2.4 IIC Status Register (IBSR)

	7	6	5	4	3	2	1	0
R	TCF	IAAS	IBB	IBAL	0	SRW	IBIF	RXAK
W								
Reset	1	0	0	0	0	0	0	0

= Unimplemented or Reserved

Figure 9-7. IIC Bus Status Register (IBSR)

This status register is read-only with exception of bit 1 (IBIF) and bit 4 (IBAL), which are software clearable.

Table 9-7. IBSR Field Descriptions

Field	Description
7 TCF	**Data Transferring Bit** — While one byte of data is being transferred, this bit is cleared. It is set by the falling edge of the 9th clock of a byte transfer. Note that this bit is only valid during or immediately following a transfer to the IIC module or from the IIC module. 0 Transfer in progress 1 Transfer complete
6 IAAS	**Addressed as a Slave Bit** — When its own specific address (I-bus address register) is matched with the calling address, this bit is set.The CPU is interrupted provided the IBIE is set.Then the CPU needs to check the SRW bit and set its Tx/$\overline{\text{Rx}}$ mode accordingly.Writing to the I-bus control register clears this bit. 0 Not addressed 1 Addressed as a slave
5 IBB	Bus Busy Bit 0 This bit indicates the status of the bus. When a START signal is detected, the IBB is set. If a STOP signal is detected, IBB is cleared and the bus enters idle state. 1 Bus is busy
4 IBAL	**Arbitration Lost** — The arbitration lost bit (IBAL) is set by hardware when the arbitration procedure is lost. Arbitration is lost in the following circumstances: 1. SDA sampled low when the master drives a high during an address or data transmit cycle. 2. SDA sampled low when the master drives a high during the acknowledge bit of a data receive cycle. 3. A start cycle is attempted when the bus is busy. 4. A repeated start cycle is requested in slave mode. 5. A stop condition is detected when the master did not request it. This bit must be cleared by software, by writing a one to it. A write of 0 has no effect on this bit.
3 RESERVED	**Reserved** — Bit 3 of IBSR is reserved for future use. A read operation on this bit will return 0.

Table 9-7. IBSR Field Descriptions (continued)

Field	Description
2 SRW	**Slave Read/Write** — When IAAS is set this bit indicates the value of the R/W command bit of the calling address sent from the master This bit is only valid when the I-bus is in slave mode, a complete address transfer has occurred with an address match and no other transfers have been initiated. Checking this bit, the CPU can select slave transmit/receive mode according to the command of the master. 0 Slave receive, master writing to slave 1 Slave transmit, master reading from slave
1 IBIF	**I-Bus Interrupt** — The IBIF bit is set when one of the following conditions occurs: — Arbitration lost (IBAL bit set) — Byte transfer complete (TCF bit set) — Addressed as slave (IAAS bit set) It will cause a processor interrupt request if the IBIE bit is set. This bit must be cleared by software, writing a one to it. A write of 0 has no effect on this bit.
0 RXAK	**Received Acknowledge** — The value of SDA during the acknowledge bit of a bus cycle. If the received acknowledge bit (RXAK) is low, it indicates an acknowledge signal has been received after the completion of 8 bits data transmission on the bus. If RXAK is high, it means no acknowledge signal is detected at the 9th clock. 0 Acknowledge received 1 No acknowledge received

9.3.2.5 IIC Data I/O Register (IBDR)

	7	6	5	4	3	2	1	0
R W	D7	D6	D5	D4	D3	D2	D1	D0
Reset	0	0	0	0	0	0	0	0

Figure 9-8. IIC Bus Data I/O Register (IBDR)

In master transmit mode, when data is written to the IBDR a data transfer is initiated. The most significant bit is sent first. In master receive mode, reading this register initiates next byte data receiving. In slave mode, the same functions are available after an address match has occurred.Note that the Tx/Rx bit in the IBCR must correctly reflect the desired direction of transfer in master and slave modes for the transmission to begin. For instance, if the IIC is configured for master transmit but a master receive is desired, then reading the IBDR will not initiate the receive.

Reading the IBDR will return the last byte received while the IIC is configured in either master receive or slave receive modes. The IBDR does not reflect every byte that is transmitted on the IIC bus, nor can software verify that a byte has been written to the IBDR correctly by reading it back.

In master transmit mode, the first byte of data written to IBDR following assertion of MS/$\overline{SL}$ is used for the address transfer and should com.prise of the calling address (in position D7:D1) concatenated with the required R/$\overline{W}$ bit (in position D0).

9.4 Functional Description

This section provides a complete functional description of the IICV2.

9.4.1 I-Bus Protocol

The IIC bus system uses a serial data line (SDA) and a serial clock line (SCL) for data transfer. All devices connected to it must have open drain or open collector outputs. Logic AND function is exercised on both lines with external pull-up resistors. The value of these resistors is system dependent.

Normally, a standard communication is composed of four parts: START signal, slave address transmission, data transfer and STOP signal. They are described briefly in the following sections and illustrated in Figure 9-9.

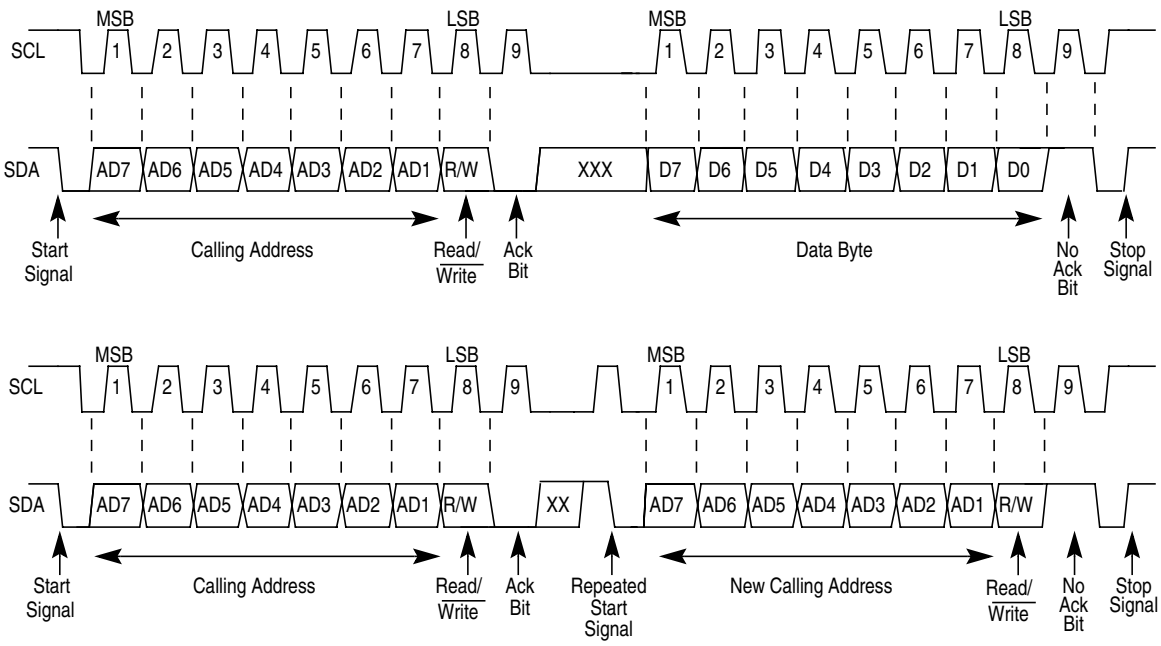

Figure 9-9. IIC-Bus Transmission Signals

9.4.1.1 START Signal

When the bus is free, i.e. no master device is engaging the bus (both SCL and SDA lines are at logical high), a master may initiate communication by sending a START signal.As shown in Figure 9-9, a START signal is defined as a high-to-low transition of SDA while SCL is high. This signal denotes the beginning of a new data transfer (each data transfer may contain several bytes of data) and brings all slaves out of their idle states.

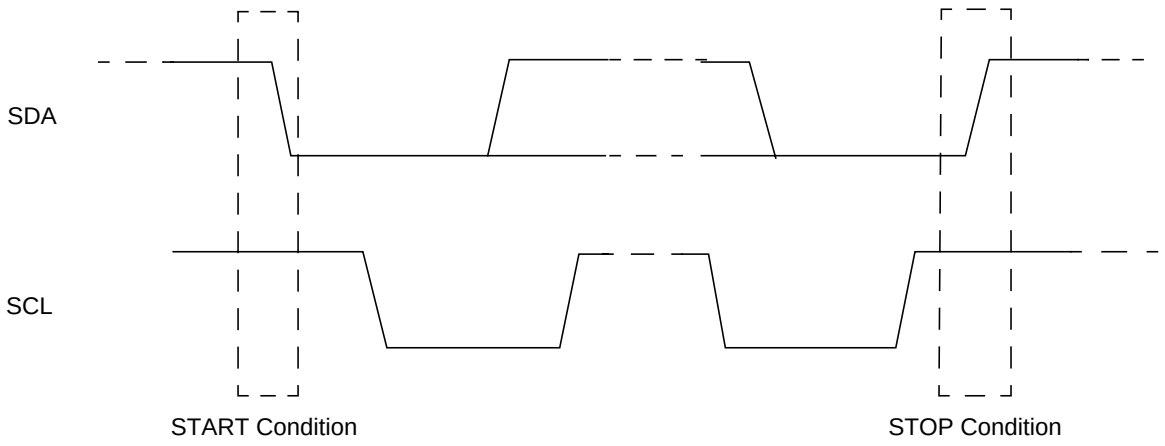

Figure 9-10. Start and Stop Conditions

9.4.1.2 Slave Address Transmission

The first byte of data transfer immediately after the START signal is the slave address transmitted by the master. This is a seven-bit calling address followed by a R/W bit. The R/W bit tells the slave the desired direction of data transfer.

1 = Read transfer, the slave transmits data to the master.
0 = Write transfer, the master transmits data to the slave.

Only the slave with a calling address that matches the one transmitted by the master will respond by sending back an acknowledge bit. This is done by pulling the SDA low at the 9th clock (see Figure 9-9).

No two slaves in the system may have the same address. If the IIC bus is master, it must not transmit an address that is equal to its own slave address. The IIC bus cannot be master and slave at the same time.However, if arbitration is lost during an address cycle the IIC bus will revert to slave mode and operate correctly even if it is being addressed by another master.

9.4.1.3 Data Transfer

As soon as successful slave addressing is achieved, the data transfer can proceed byte-by-byte in a direction specified by the R/W bit sent by the calling master

All transfers that come after an address cycle are referred to as data transfers, even if they carry sub-address information for the slave device.

Each data byte is 8 bits long. Data may be changed only while SCL is low and must be held stable while SCL is high as shown in Figure 9-9. There is one clock pulse on SCL for each data bit, the MSB being transferred first. Each data byte has to be followed by an acknowledge bit, which is signalled from the receiving device by pulling the SDA low at the ninth clock. So one complete data byte transfer needs nine clock pulses.

If the slave receiver does not acknowledge the master, the SDA line must be left high by the slave. The master can then generate a stop signal to abort the data transfer or a start signal (repeated start) to commence a new calling.

If the master receiver does not acknowledge the slave transmitter after a byte transmission, it means 'end of data' to the slave, so the slave releases the SDA line for the master to generate STOP or START signal.

9.4.1.4 STOP Signal

The master can terminate the communication by generating a STOP signal to free the bus. However, the master may generate a START signal followed by a calling command without generating a STOP signal first. This is called repeated START. A STOP signal is defined as a low-to-high transition of SDA while SCL at logical 1 (see Figure 9-9).

The master can generate a STOP even if the slave has generated an acknowledge at which point the slave must release the bus.

9.4.1.5 Repeated START Signal

As shown in Figure 9-9, a repeated START signal is a START signal generated without first generating a STOP signal to terminate the communication. This is used by the master to communicate with another slave or with the same slave in different mode (transmit/receive mode) without releasing the bus.

9.4.1.6 Arbitration Procedure

The Inter-IC bus is a true multi-master bus that allows more than one master to be connected on it. If two or more masters try to control the bus at the same time, a clock synchronization procedure determines the bus clock, for which the low period is equal to the longest clock low period and the high is equal to the shortest one among the masters. The relative priority of the contending masters is determined by a data arbitration procedure, a bus master loses arbitration if it transmits logic 1 while another master transmits logic 0. The losing masters immediately switch over to slave receive mode and stop driving SDA output. In this case the transition from master to slave mode does not generate a STOP condition. Meanwhile, a status bit is set by hardware to indicate loss of arbitration.

9.4.1.7 Clock Synchronization

Because wire-AND logic is performed on SCL line, a high-to-low transition on SCL line affects all the devices connected on the bus. The devices start counting their low period and as soon as a device's clock has gone low, it holds the SCL line low until the clock high state is reached.However, the change of low to high in this device clock may not change the state of the SCL line if another device clock is within its low period. Therefore, synchronized clock SCL is held low by the device with the longest low period. Devices with shorter low periods enter a high wait state during this time (see Figure 9-10). When all devices concerned have counted off their low period, the synchronized clock SCL line is released and pulled high. There is then no difference between the device clocks and the state of the SCL line and all the devices start counting their high periods.The first device to complete its high period pulls the SCL line low again.

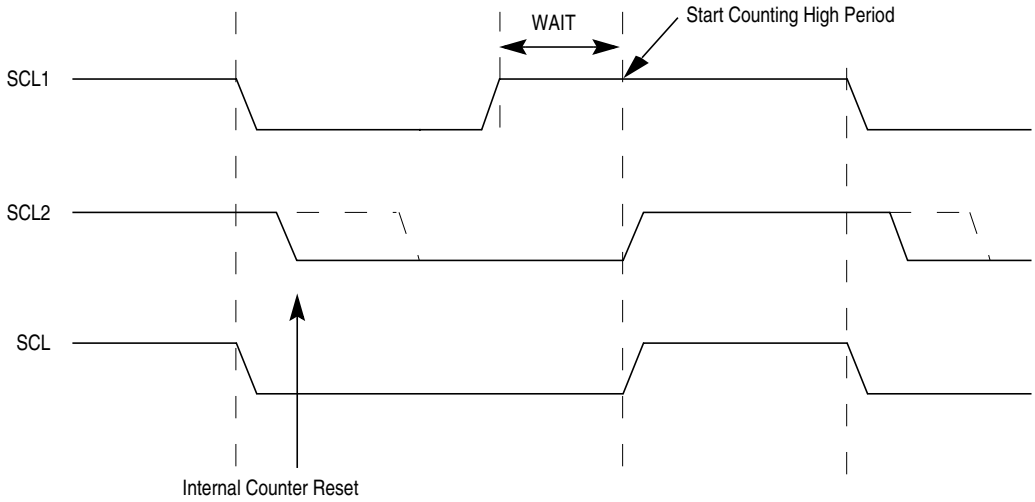

Figure 9-11. IIC-Bus Clock Synchronization

9.4.1.8 Handshaking

The clock synchronization mechanism can be used as a handshake in data transfer. Slave devices may hold the SCL low after completion of one byte transfer (9 bits). In such case, it halts the bus clock and forces the master clock into wait states until the slave releases the SCL line.

9.4.1.9 Clock Stretching

The clock synchronization mechanism can be used by slaves to slow down the bit rate of a transfer. After the master has driven SCL low the slave can drive SCL low for the required period and then release it.If the slave SCL low period is greater than the master SCL low period then the resulting SCL bus signal low period is stretched.

9.4.2 Operation in Run Mode

This is the basic mode of operation.

9.4.3 Operation in Wait Mode

IIC operation in wait mode can be configured. Depending on the state of internal bits, the IIC can operate normally when the CPU is in wait mode or the IIC clock generation can be turned off and the IIC module enters a power conservation state during wait mode. In the later case, any transmission or reception in progress stops at wait mode entry.

9.4.4 Operation in Stop Mode

The IIC is inactive in stop mode for reduced power consumption. The STOP instruction does not affect IIC register states.

9.5 Resets

The reset state of each individual bit is listed in Section 9.3, "Memory Map and Register Definition," which details the registers and their bit-fields.

9.6 Interrupts

IICV2 uses only one interrupt vector.

Table 9-8. Interrupt Summary

Interrupt	Offset	Vector	Priority	Source	Description
IIC Interrupt	—	—	—	IBAL, TCF, IAAS bits in IBSR register	When either of IBAL, TCF or IAAS bits is set may cause an interrupt based on arbitration lost, transfer complete or address detect conditions

Internally there are three types of interrupts in IIC. The interrupt service routine can determine the interrupt type by reading the status register.

IIC Interrupt can be generated on

1. Arbitration lost condition (IBAL bit set)
2. Byte transfer condition (TCF bit set)
3. Address detect condition (IAAS bit set)

The IIC interrupt is enabled by the IBIE bit in the IIC control register. It must be cleared by writing 0 to the IBF bit in the interrupt service routine.

9.7 Initialization/Application Information

9.7.1 IIC Programming Examples

9.7.1.1 Initialization Sequence

Reset will put the IIC bus control register to its default status. Before the interface can be used to transfer serial data, an initialization procedure must be carried out, as follows:

1. Update the frequency divider register (IBFD) and select the required division ratio to obtain SCL frequency from system clock.
2. Update the IIC bus address register (IBAD) to define its slave address.
3. Set the IBEN bit of the IIC bus control register (IBCR) to enable the IIC interface system.
4. Modify the bits of the IIC bus control register (IBCR) to select master/slave mode, transmit/receive mode and interrupt enable or not.

9.7.1.2 Generation of START

After completion of the initialization procedure, serial data can be transmitted by selecting the 'master transmitter' mode. If the device is connected to a multi-master bus system, the state of the IIC bus busy bit (IBB) must be tested to check whether the serial bus is free.

If the bus is free (IBB=0), the start condition and the first byte (the slave address) can be sent. The data written to the data register comprises the slave calling address and the LSB set to indicate the direction of transfer required from the slave.

The bus free time (i.e., the time between a STOP condition and the following START condition) is built into the hardware that generates the START cycle. Depending on the relative frequencies of the system clock and the SCL period it may be necessary to wait until the IIC is busy after writing the calling address to the IBDR before proceeding with the following instructions. This is illustrated in the following example.

An example of a program which generates the START signal and transmits the first byte of data (slave address) is shown below:

```
CHFLAG    BRSET   IBSR,#$20,*     ;WAIT FOR IBB FLAG TO CLEAR
TXSTART   BSET    IBCR,#$30       ;SET TRANSMIT AND MASTER MODE;i.e. GENERATE START CONDITION
          MOVB    CALLING,IBDR    ;TRANSMIT THE CALLING ADDRESS, D0=R/W
IBFREE    BRCLR   IBSR,#$20,*     ;WAIT FOR IBB FLAG TO SET
```

9.7.1.3 Post-Transfer Software Response

Transmission or reception of a byte will set the data transferring bit (TCF) to 1, which indicates one byte communication is finished. The IIC bus interrupt bit (IBIF) is set also; an interrupt will be generated if the interrupt function is enabled during initialization by setting the IBIE bit. Software must clear the IBIF bit in the interrupt routine first. The TCF bit will be cleared by reading from the IIC bus data I/O register (IBDR) in receive mode or writing to IBDR in transmit mode.

Software may service the IIC I/O in the main program by monitoring the IBIF bit if the interrupt function is disabled. Note that polling should monitor the IBIF bit rather than the TCF bit because their operation is different when arbitration is lost.

Note that when an interrupt occurs at the end of the address cycle the master will always be in transmit mode, i.e. the address is transmitted. If master receive mode is required, indicated by R/W bit in IBDR, then the Tx/Rx bit should be toggled at this stage.

During slave mode address cycles (IAAS=1), the SRW bit in the status register is read to determine the direction of the subsequent transfer and the Tx/Rx bit is programmed accordingly. For slave mode data cycles (IAAS=0) the SRW bit is not valid, the Tx/Rx bit in the control register should be read to determine the direction of the current transfer.

The following is an example of a software response by a 'master transmitter' in the interrupt routine.

```
ISR       BCLR    IBSR,#$02           ;CLEAR THE IBIF FLAG
          BRCLR   IBCR,#$20,SLAVE     ;BRANCH IF IN SLAVE MODE
          BRCLR   IBCR,#$10,RECEIVE   ;BRANCH IF IN RECEIVE MODE
          BRSET   IBSR,#$01,END       ;IF NO ACK, END OF TRANSMISSION
TRANSMIT  MOVB    DATABUF,IBDR        ;TRANSMIT NEXT BYTE OF DATA
```

9.7.1.4 Generation of STOP

A data transfer ends with a STOP signal generated by the 'master' device. A master transmitter can simply generate a STOP signal after all the data has been transmitted. The following is an example showing how a stop condition is generated by a master transmitter.

```
MASTX   TST     TXCNT           ;GET VALUE FROM THE TRANSMITING COUNTER
        BEQ     END             ;END IF NO MORE DATA
        BRSET   IBSR,#$01,END   ;END IF NO ACK
        MOVB    DATABUF,IBDR    ;TRANSMIT NEXT BYTE OF DATA
        DEC     TXCNT           ;DECREASE THE TXCNT
        BRA     EMASTX          ;EXIT
END     BCLR    IBCR,#$20       ;GENERATE A STOP CONDITION
EMASTX  RTI                     ;RETURN FROM INTERRUPT
```

If a master receiver wants to terminate a data transfer, it must inform the slave transmitter by not acknowledging the last byte of data which can be done by setting the transmit acknowledge bit (TXAK) before reading the 2nd last byte of data. Before reading the last byte of data, a STOP signal must be generated first. The following is an example showing how a STOP signal is generated by a master receiver.

```
MASR    DEC     RXCNT           ;DECREASE THE RXCNT
        BEQ     ENMASR          ;LAST BYTE TO BE READ
        MOVB    RXCNT,D1        ;CHECK SECOND LAST BYTE
        DEC     D1              ;TO BE READ
        BNE     NXMAR           ;NOT LAST OR SECOND LAST
LAMAR   BSET    IBCR,#$08       ;SECOND LAST, DISABLE ACK
                                ;TRANSMITTING
        BRA     NXMAR
ENMASR  BCLR    IBCR,#$20       ;LAST ONE, GENERATE 'STOP' SIGNAL
NXMAR   MOVB    IBDR,RXBUF      ;READ DATA AND STORE
        RTI
```

9.7.1.5 Generation of Repeated START

At the end of data transfer, if the master continues to want to communicate on the bus, it can generate another START signal followed by another slave address without first generating a STOP signal. A program example is as shown.

```
RESTART BSET    IBCR,#$04       ;ANOTHER START (RESTART)
        MOVB    CALLING,IBDR    ;TRANSMIT THE CALLING ADDRESS;D0=R/W
```

9.7.1.6 Slave Mode

In the slave interrupt service routine, the module addressed as slave bit (IAAS) should be tested to check if a calling of its own address has just been received. If IAAS is set, software should set the transmit/receive mode select bit (Tx/Rx bit of IBCR) according to the R/W command bit (SRW). Writing to the IBCR clears the IAAS automatically. Note that the only time IAAS is read as set is from the interrupt at the end of the address cycle where an address match occurred, interrupts resulting from subsequent data transfers will have IAAS cleared. A data transfer may now be initiated by writing information to IBDR, for slave transmits, or dummy reading from IBDR, in slave receive mode. The slave will drive SCL low in-between byte transfers, SCL is released when the IBDR is accessed in the required mode.

In slave transmitter routine, the received acknowledge bit (RXAK) must be tested before transmitting the next byte of data. Setting RXAK means an 'end of data' signal from the master receiver, after which it must be switched from transmitter mode to receiver mode by software. A dummy read then releases the SCL line so that the master can generate a STOP signal.

9.7.1.7 Arbitration Lost

If several masters try to engage the bus simultaneously, only one master wins and the others lose arbitration. The devices which lost arbitration are immediately switched to slave receive mode by the hardware. Their data output to the SDA line is stopped, but SCL continues to be generated until the end of the byte during which arbitration was lost. An interrupt occurs at the falling edge of the ninth clock of this transfer with IBAL=1 and MS/SL=0. If one master attempts to start transmission while the bus is being engaged by another master, the hardware will inhibit the transmission; switch the MS/SL bit from 1 to 0 without generating STOP condition; generate an interrupt to CPU and set the IBAL to indicate that the attempt to engage the bus is failed. When considering these cases, the slave service routine should test the IBAL first and the software should clear the IBAL bit if it is set.

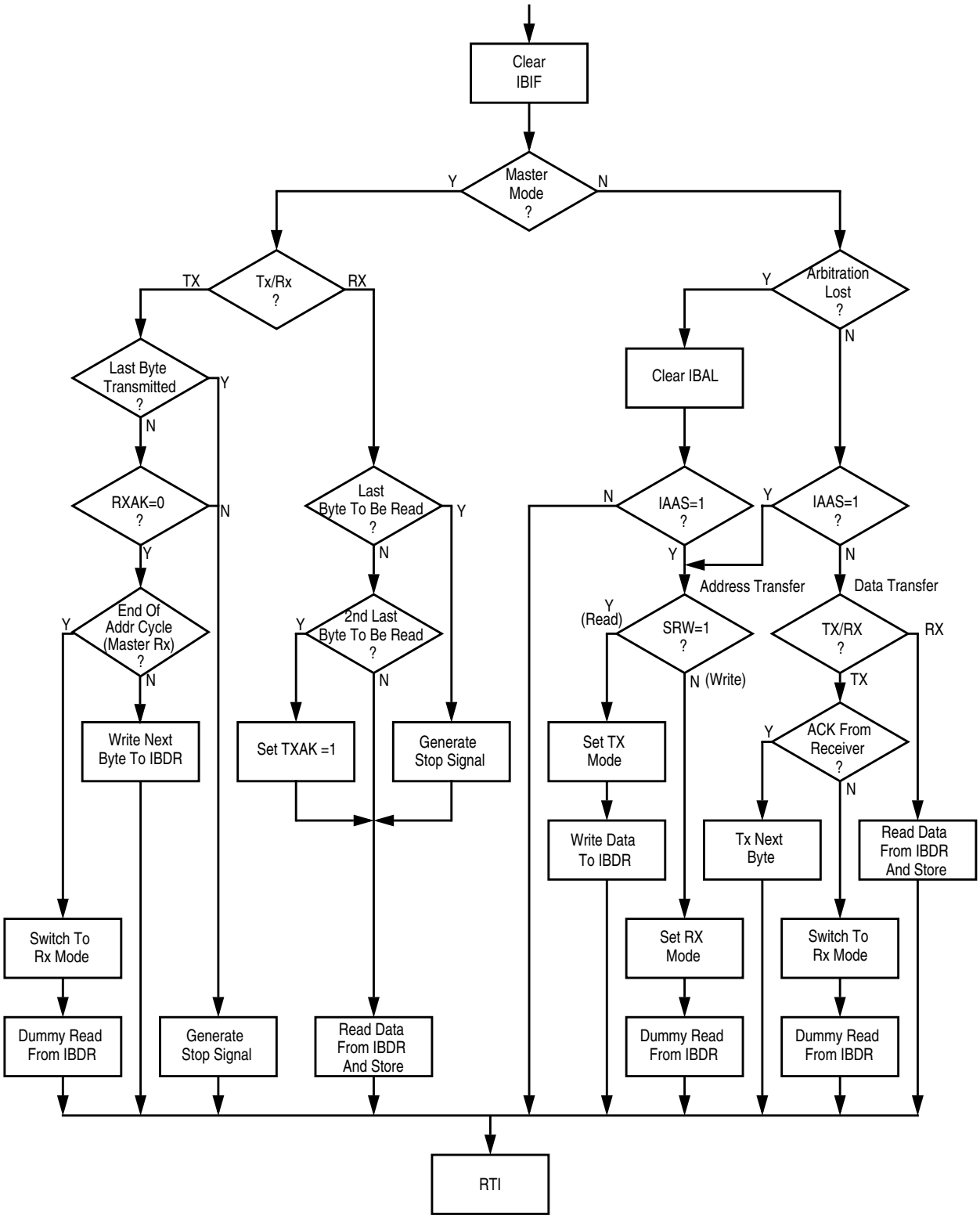

Figure 9-12. Flow-Chart of Typical IIC Interrupt Routine

Chapter 10
Freescale's Scalable Controller Area Network (S12MSCANV3)

10.1 Introduction

Freescale's scalable controller area network (S12MSCANV3) definition is based on the MSCAN12 definition, which is the specific implementation of the MSCAN concept targeted for the M68HC12 microcontroller family.

The module is a communication controller implementing the CAN 2.0A/B protocol as defined in the Bosch specification dated September 1991. For users to fully understand the MSCAN specification, it is recommended that the Bosch specification be read first to familiarize the reader with the terms and concepts contained within this document.

Though not exclusively intended for automotive applications, CAN protocol is designed to meet the specific requirements of a vehicle serial data bus: real-time processing, reliable operation in the EMI environment of a vehicle, cost-effectiveness, and required bandwidth.

MSCAN uses an advanced buffer arrangement resulting in predictable real-time behavior and simplified application software.

10.1.1 Glossary

ACK: Acknowledge of CAN message

CAN: Controller Area Network

CRC: Cyclic Redundancy Code

EOF: End of Frame

FIFO: First-In-First-Out Memory

IFS: Inter-Frame Sequence

SOF: Start of Frame

CPU bus: CPU related read/write data bus

CAN bus: CAN protocol related serial bus

oscillator clock: Direct clock from external oscillator

bus clock: CPU bus realated clock

CAN clock: CAN protocol related clock

10.1.2 Block Diagram

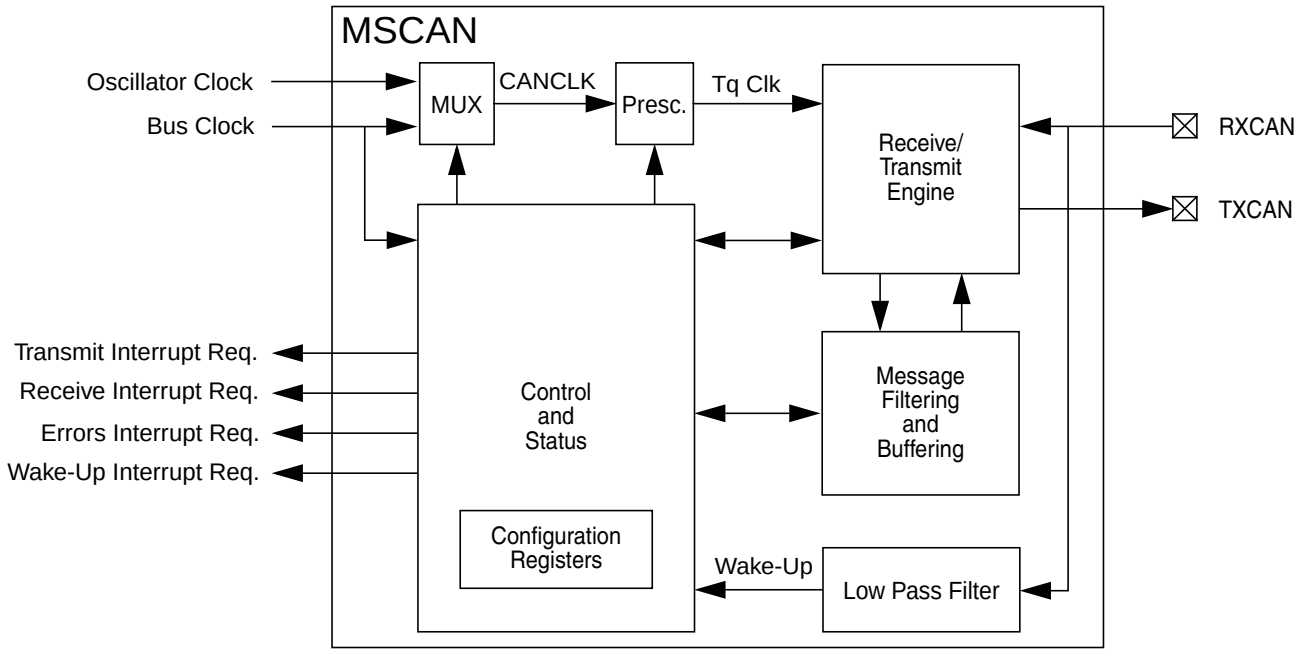

Figure 10-1. MSCAN Block Diagram

10.1.3 Features

The basic features of the MSCAN are as follows:

- Implementation of the CAN protocol — Version 2.0A/B
  - — Standard and extended data frames
  - — Zero to eight bytes data length
  - — Programmable bit rate up to 1 Mbps[1]
  - — Support for remote frames
- Five receive buffers with FIFO storage scheme
- Three transmit buffers with internal prioritization using a "local priority" concept
- Flexible maskable identifier filter supports two full-size (32-bit) extended identifier filters, or four 16-bit filters, or eight 8-bit filters
- Programmable wakeup functionality with integrated low-pass filter
- Programmable loopback mode supports self-test operation
- Programmable listen-only mode for monitoring of CAN bus
- Programmable bus-off recovery functionality
- Separate signalling and interrupt capabilities for all CAN receiver and transmitter error states (warning, error passive, bus-off)
- Programmable MSCAN clock source either bus clock or oscillator clock

1. Depending on the actual bit timing and the clock jitter of the PLL.

- Internal timer for time-stamping of received and transmitted messages
- Three low-power modes: sleep, power down, and MSCAN enable
- Global initialization of configuration registers

10.1.4 Modes of Operation

The following modes of operation are specific to the MSCAN. See Section 10.4, "Functional Description," for details.

- Listen-Only Mode
- MSCAN Sleep Mode
- MSCAN Initialization Mode
- MSCAN Power Down Mode

10.2 External Signal Description

The MSCAN uses two external pins:

10.2.1 RXCAN — CAN Receiver Input Pin

RXCAN is the MSCAN receiver input pin.

10.2.2 TXCAN — CAN Transmitter Output Pin

TXCAN is the MSCAN transmitter output pin. The TXCAN output pin represents the logic level on the CAN bus:

0 = Dominant state
1 = Recessive state

10.2.3 CAN System

A typical CAN system with MSCAN is shown in Figure 10-2. Each CAN station is connected physically to the CAN bus lines through a transceiver device. The transceiver is capable of driving the large current needed for the CAN bus and has current protection against defective CAN or defective stations.

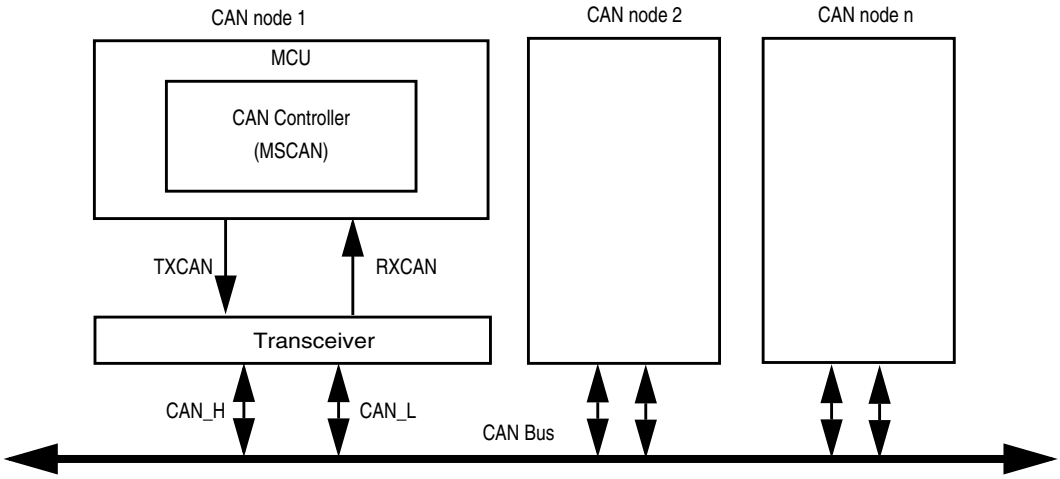

Figure 10-2. CAN System

10.3 Memory Map and Register Definition

This section provides a detailed description of all registers accessible in the MSCAN.

10.3.1 Module Memory Map

Figure 10-3 gives an overview on all registers and their individual bits in the MSCAN memory map. The *register address* results from the addition of *base address* and *address offset*. The *base address* is determined at the MCU level and can be found in the MCU memory map description. The *address offset* is defined at the module level.

The MSCAN occupies 64 bytes in the memory space. The base address of the MSCAN module is determined at the MCU level when the MCU is defined. The register decode map is fixed and begins at the first address of the module address offset.

The detailed register descriptions follow in the order they appear in the register map.

Register Name		Bit 7	6	5	4	3	2	1	Bit 0
0x0000 CANCTL0	R	RXFRM	RXACT	CSWAI	SYNCH	TIME	WUPE	SLPRQ	INITRQ
	W								
0x0001 CANCTL1	R	CANE	CLKSRC	LOOPB	LISTEN	BORM	WUPM	SLPAK	INITAK
	W								

= Unimplemented or Reserved u = Unaffected

Figure 10-3. MSCAN Register Summary

Register Name		Bit 7	6	5	4	3	2	1	Bit 0
0x0002 CANBTR0	R/W	SJW1	SJW0	BRP5	BRP4	BRP3	BRP2	BRP1	BRP0
0x0003 CANBTR1	R/W	SAMP	TSEG22	TSEG21	TSEG20	TSEG13	TSEG12	TSEG11	TSEG10
0x0004 CANRFLG	R	WUPIF	CSCIF	RSTAT1	RSTAT0	TSTAT1	TSTAT0	OVRIF	RXF
	W								
0x0005 CANRIER	R/W	WUPIE	CSCIE	RSTATE1	RSTATE0	TSTATE1	TSTATE0	OVRIE	RXFIE
0x0006 CANTFLG	R	0	0	0	0	0	TXE2	TXE1	TXE0
	W								
0x0007 CANTIER	R	0	0	0	0	0	TXEIE2	TXEIE1	TXEIE0
	W								
0x0008 CANTARQ	R	0	0	0	0	0	ABTRQ2	ABTRQ1	ABTRQ0
	W								
0x0009 CANTAAK	R	0	0	0	0	0	ABTAK2	ABTAK1	ABTAK0
	W								
0x000A CANTBSEL	R	0	0	0	0	0	TX2	TX1	TX0
	W								
0x000B CANIDAC	R	0	0	IDAM1	IDAM0	0	IDHIT2	IDHIT1	IDHIT0
	W								
0x000C Reserved	R	0	0	0	0	0	0	0	0
	W								
0x000D CANMISC	R	0	0	0	0	0	0	0	BOHOLD
	W								
0x000E CANRXERR	R	RXERR7	RXERR6	RXERR5	RXERR4	RXERR3	RXERR2	RXERR1	RXERR0
	W								
0x000F CANTXERR	R	TXERR7	TXERR6	TXERR5	TXERR4	TXERR3	TXERR2	TXERR1	TXERR0
	W								
0x0010–0x0013 CANIDAR0–3	R/W	AC7	AC6	AC5	AC4	AC3	AC2	AC1	AC0

= Unimplemented or Reserved u = Unaffected

Figure 10-3. MSCAN Register Summary (continued)

Register Name		Bit 7	6	5	4	3	2	1	Bit 0
0x0014–0x0017 CANIDMRx	R/W	AM7	AM6	AM5	AM4	AM3	AM2	AM1	AM0
0x0018–0x001B CANIDAR4–7	R/W	AC7	AC6	AC5	AC4	AC3	AC2	AC1	AC0
0x001C–0x001F CANIDMR4–7	R/W	AM7	AM6	AM5	AM4	AM3	AM2	AM1	AM0
0x0020–0x002F CANRXFG	R/W	See Section 10.3.3, "Programmer's Model of Message Storage"							
0x0030–0x003F CANTXFG	R/W	See Section 10.3.3, "Programmer's Model of Message Storage"							

= Unimplemented or Reserved u = Unaffected

Figure 10-3. MSCAN Register Summary (continued)

10.3.2 Register Descriptions

This section describes in detail all the registers and register bits in the MSCAN module. Each description includes a standard register diagram with an associated figure number. Details of register bit and field function follow the register diagrams, in bit order. All bits of all registers in this module are completely synchronous to internal clocks during a register read.

10.3.2.1 MSCAN Control Register 0 (CANCTL0)

The CANCTL0 register provides various control bits of the MSCAN module as described below.

	7	6	5	4	3	2	1	0
R	RXFRM	RXACT	CSWAI	SYNCH	TIME	WUPE	SLPRQ	INITRQ
W								
Reset:	0	0	0	0	0	0	0	1

= Unimplemented

Figure 10-4. MSCAN Control Register 0 (CANCTL0)

NOTE

The CANCTL0 register, except WUPE, INITRQ, and SLPRQ, is held in the reset state when the initialization mode is active (INITRQ = 1 and INITAK = 1). This register is writable again as soon as the initialization mode is exited (INITRQ = 0 and INITAK = 0).

Read: Anytime

Write: Anytime when out of initialization mode; exceptions are read-only RXACT and SYNCH, RXFRM (which is set by the module only), and INITRQ (which is also writable in initialization mode).

Table 10-1. CANCTL0 Register Field Descriptions

Field	Description
7 RXFRM[1]	**Received Frame Flag** — This bit is read and clear only. It is set when a receiver has received a valid message correctly, independently of the filter configuration. After it is set, it remains set until cleared by software or reset. Clearing is done by writing a 1. Writing a 0 is ignored. This bit is not valid in loopback mode. 0 No valid message was received since last clearing this flag 1 A valid message was received since last clearing of this flag
6 RXACT	**Receiver Active Status** — This read-only flag indicates the MSCAN is receiving a message. The flag is controlled by the receiver front end. This bit is not valid in loopback mode. 0 MSCAN is transmitting or idle[2] 1 MSCAN is receiving a message (including when arbitration is lost)[2]
5 CSWAI[3]	**CAN Stops in Wait Mode** — Enabling this bit allows for lower power consumption in wait mode by disabling all the clocks at the CPU bus interface to the MSCAN module. 0 The module is not affected during wait mode 1 The module ceases to be clocked during wait mode
4 SYNCH	**Synchronized Status** — This read-only flag indicates whether the MSCAN is synchronized to the CAN bus and able to participate in the communication process. It is set and cleared by the MSCAN. 0 MSCAN is not synchronized to the CAN bus 1 MSCAN is synchronized to the CAN bus
3 TIME	**Timer Enable** — This bit activates an internal 16-bit wide free running timer which is clocked by the bit clock rate. If the timer is enabled, a 16-bit time stamp will be assigned to each transmitted/received message within the active TX/RX buffer. Right after the EOF of a valid message on the CAN bus, the time stamp is written to the highest bytes (0x000E, 0x000F) in the appropriate buffer (see Section 10.3.3, "Programmer's Model of Message Storage"). The internal timer is reset (all bits set to 0) when disabled. This bit is held low in initialization mode. 0 Disable internal MSCAN timer 1 Enable internal MSCAN timer
2 WUPE[4]	**Wake-Up Enable** — This configuration bit allows the MSCAN to restart from sleep mode when traffic on CAN is detected (see Section 10.4.5.4, "MSCAN Sleep Mode"). This bit must be configured before sleep mode entry for the selected function to take effect. 0 Wake-up disabled — The MSCAN ignores traffic on CAN 1 Wake-up enabled — The MSCAN is able to restart

Table 10-1. CANCTL0 Register Field Descriptions (continued)

Field	Description
1 SLPRQ[5]	**Sleep Mode Request** — This bit requests the MSCAN to enter sleep mode, which is an internal power saving mode (see Section 10.4.5.4, "MSCAN Sleep Mode"). The sleep mode request is serviced when the CAN bus is idle, i.e., the module is not receiving a message and all transmit buffers are empty. The module indicates entry to sleep mode by setting SLPAK = 1 (see Section 10.3.2.2, "MSCAN Control Register 1 (CANCTL1)"). SLPRQ cannot be set while the WUPIF flag is set (see Section 10.3.2.5, "MSCAN Receiver Flag Register (CANRFLG)"). Sleep mode will be active until SLPRQ is cleared by the CPU or, depending on the setting of WUPE, the MSCAN detects activity on the CAN bus and clears SLPRQ itself. 0 Running — The MSCAN functions normally 1 Sleep mode request — The MSCAN enters sleep mode when CAN bus idle
0 INITRQ[6,7]	**Initialization Mode Request** — When this bit is set by the CPU, the MSCAN skips to initialization mode (see Section 10.4.5.5, "MSCAN Initialization Mode"). Any ongoing transmission or reception is aborted and synchronization to the CAN bus is lost. The module indicates entry to initialization mode by setting INITAK = 1 (Section 10.3.2.2, "MSCAN Control Register 1 (CANCTL1)"). The following registers enter their hard reset state and restore their default values: CANCTL0[8], CANRFLG[9], CANRIER[10], CANTFLG, CANTIER, CANTARQ, CANTAAK, and CANTBSEL. The registers CANCTL1, CANBTR0, CANBTR1, CANIDAC, CANIDAR0-7, and CANIDMR0-7 can only be written by the CPU when the MSCAN is in initialization mode (INITRQ = 1 and INITAK = 1). The values of the error counters are not affected by initialization mode. When this bit is cleared by the CPU, the MSCAN restarts and then tries to synchronize to the CAN bus. If the MSCAN is not in bus-off state, it synchronizes after 11 consecutive recessive bits on the CAN bus; if the MSCAN is in bus-off state, it continues to wait for 128 occurrences of 11 consecutive recessive bits. Writing to other bits in CANCTL0, CANRFLG, CANRIER, CANTFLG, or CANTIER must be done only after initialization mode is exited, which is INITRQ = 0 and INITAK = 0. 0 Normal operation 1 MSCAN in initialization mode

1 The MSCAN must be in normal mode for this bit to become set.

2 See the Bosch CAN 2.0A/B specification for a detailed definition of transmitter and receiver states.

3 In order to protect from accidentally violating the CAN protocol, the TXCAN pin is immediately forced to a recessive state when the CPU enters wait (CSWAI = 1) or stop mode (see Section 10.4.5.2, "Operation in Wait Mode" and Section 10.4.5.3, "Operation in Stop Mode")**.**

4 The CPU has to make sure that the WUPE register and the WUPIE wake-up interrupt enable register (see Section 10.3.2.6, "MSCAN Receiver Interrupt Enable Register (CANRIER)) is enabled, if the recovery mechanism from stop or wait is required.

5 The CPU cannot clear SLPRQ before the MSCAN has entered sleep mode (SLPRQ = 1 and SLPAK = 1).

6 The CPU cannot clear INITRQ before the MSCAN has entered initialization mode (INITRQ = 1 and INITAK = 1).

7 In order to protect from accidentally violating the CAN protocol, the TXCAN pin is immediately forced to a recessive state when the initialization mode is requested by the CPU. Thus, the recommended procedure is to bring the MSCAN into sleep mode (SLPRQ = 1 and SLPAK = 1) before requesting initialization mode.

8 Not including WUPE, INITRQ, and SLPRQ.

9 TSTAT1 and TSTAT0 are not affected by initialization mode.

10 RSTAT1 and RSTAT0 are not affected by initialization mode.

10.3.2.2 MSCAN Control Register 1 (CANCTL1)

The CANCTL1 register provides various control bits and handshake status information of the MSCAN module as described below.

	7	6	5	4	3	2	1	0
R	CANE	CLKSRC	LOOPB	LISTEN	BORM	WUPM	SLPAK	INITAK
W								
Reset:	0	0	0	1	0	0	0	1

= Unimplemented

Figure 10-5. MSCAN Control Register 1 (CANCTL1)

Read: Anytime
Write: Anytime when INITRQ = 1 and INITAK = 1, except CANE which is write once in normal and anytime in special system operation modes when the MSCAN is in initialization mode (INITRQ = 1 and INITAK = 1).

Table 10-2. CANCTL1 Register Field Descriptions

Field	Description
7 CANE	**MSCAN Enable** 0 MSCAN module is disabled 1 MSCAN module is enabled
6 CLKSRC	**MSCAN Clock Source** — This bit defines the clock source for the MSCAN module (only for systems with a clock generation module; Section 10.4.3.2, "Clock System," and Section Figure 10-43., "MSCAN Clocking Scheme,"). 0 MSCAN clock source is the oscillator clock 1 MSCAN clock source is the bus clock
5 LOOPB	**Loopback Self Test Mode** — When this bit is set, the MSCAN performs an internal loopback which can be used for self test operation. The bit stream output of the transmitter is fed back to the receiver internally. The RXCAN input pin is ignored and the TXCAN output goes to the recessive state (logic 1). The MSCAN behaves as it does normally when transmitting and treats its own transmitted message as a message received from a remote node. In this state, the MSCAN ignores the bit sent during the ACK slot in the CAN frame acknowledge field to ensure proper reception of its own message. Both transmit and receive interrupts are generated. 0 Loopback self test disabled 1 Loopback self test enabled
4 LISTEN	**Listen Only Mode** — This bit configures the MSCAN as a CAN bus monitor. When LISTEN is set, all valid CAN messages with matching ID are received, but no acknowledgement or error frames are sent out (see Section 10.4.4.4, "Listen-Only Mode"). In addition, the error counters are frozen. Listen only mode supports applications which require "hot plugging" or throughput analysis. The MSCAN is unable to transmit any messages when listen only mode is active. 0 Normal operation 1 Listen only mode activated
3 BORM	**Bus-Off Recovery Mode** — This bits configures the bus-off state recovery mode of the MSCAN. Refer to Section 10.5.2, "Bus-Off Recovery," for details. 0 Automatic bus-off recovery (see Bosch CAN 2.0A/B protocol specification) 1 Bus-off recovery upon user request
2 WUPM	**Wake-Up Mode** — If WUPE in CANCTL0 is enabled, this bit defines whether the integrated low-pass filter is applied to protect the MSCAN from spurious wake-up (see Section 10.4.5.4, "MSCAN Sleep Mode"). 0 MSCAN wakes up on any dominant level on the CAN bus 1 MSCAN wakes up only in case of a dominant pulse on the CAN bus that has a length of T_{wup}

Table 10-2. CANCTL1 Register Field Descriptions (continued)

Field	Description
1 SLPAK	**Sleep Mode Acknowledge** — This flag indicates whether the MSCAN module has entered sleep mode (see Section 10.4.5.4, "MSCAN Sleep Mode"). It is used as a handshake flag for the SLPRQ sleep mode request. Sleep mode is active when SLPRQ = 1 and SLPAK = 1. Depending on the setting of WUPE, the MSCAN will clear the flag if it detects activity on the CAN bus while in sleep mode. 0 Running — The MSCAN operates normally 1 Sleep mode active — The MSCAN has entered sleep mode
0 INITAK	**Initialization Mode Acknowledge** — This flag indicates whether the MSCAN module is in initialization mode (see Section 10.4.5.5, "MSCAN Initialization Mode"). It is used as a handshake flag for the INITRQ initialization mode request. Initialization mode is active when INITRQ = 1 and INITAK = 1. The registers CANCTL1, CANBTR0, CANBTR1, CANIDAC, CANIDAR0–CANIDAR7, and CANIDMR0–CANIDMR7 can be written only by the CPU when the MSCAN is in initialization mode. 0 Running — The MSCAN operates normally 1 Initialization mode active — The MSCAN has entered initialization mode

10.3.2.3 MSCAN Bus Timing Register 0 (CANBTR0)

The CANBTR0 register configures various CAN bus timing parameters of the MSCAN module.

	7	6	5	4	3	2	1	0
R W	SJW1	SJW0	BRP5	BRP4	BRP3	BRP2	BRP1	BRP0
Reset:	0	0	0	0	0	0	0	0

Figure 10-6. MSCAN Bus Timing Register 0 (CANBTR0)

Read: Anytime
Write: Anytime in initialization mode (INITRQ = 1 and INITAK = 1)

Table 10-3. CANBTR0 Register Field Descriptions

Field	Description
7:6 SJW[1:0]	**Synchronization Jump Width** — The synchronization jump width defines the maximum number of time quanta (Tq) clock cycles a bit can be shortened or lengthened to achieve resynchronization to data transitions on the CAN bus (see Table 10-4).
5:0 BRP[5:0]	**Baud Rate Prescaler** — These bits determine the time quanta (Tq) clock which is used to build up the bit timing (see Table 10-5).

Table 10-4. Synchronization Jump Width

SJW1	SJW0	Synchronization Jump Width
0	0	1 Tq clock cycle
0	1	2 Tq clock cycles
1	0	3 Tq clock cycles
1	1	4 Tq clock cycles

Table 10-5. Baud Rate Prescaler

BRP5	BRP4	BRP3	BRP2	BRP1	BRP0	Prescaler value (P)
0	0	0	0	0	0	1
0	0	0	0	0	1	2
0	0	0	0	1	0	3
0	0	0	0	1	1	4
:	:	:	:	:	:	:
1	1	1	1	1	1	64

10.3.2.4 MSCAN Bus Timing Register 1 (CANBTR1)

The CANBTR1 register configures various CAN bus timing parameters of the MSCAN module.

	7	6	5	4	3	2	1	0
R W	SAMP	TSEG22	TSEG21	TSEG20	TSEG13	TSEG12	TSEG11	TSEG10
Reset:	0	0	0	0	0	0	0	0

Figure 10-7. MSCAN Bus Timing Register 1 (CANBTR1)

Read: Anytime
Write: Anytime in initialization mode (INITRQ = 1 and INITAK = 1)

Table 10-6. CANBTR1 Register Field Descriptions

Field	Description
7 SAMP	**Sampling** — This bit determines the number of CAN bus samples taken per bit time. 0 One sample per bit. 1 Three samples per bit[1]. If SAMP = 0, the resulting bit value is equal to the value of the single bit positioned at the sample point. If SAMP = 1, the resulting bit value is determined by using majority rule on the three total samples. For higher bit rates, it is recommended that only one sample is taken per bit time (SAMP = 0).
6:4 TSEG2[2:0]	**Time Segment 2** — Time segments within the bit time fix the number of clock cycles per bit time and the location of the sample point (see Figure 10-44). Time segment 2 (TSEG2) values are programmable as shown in Table 10-7.
3:0 TSEG1[3:0]	**Time Segment 1** — Time segments within the bit time fix the number of clock cycles per bit time and the location of the sample point (see Figure 10-44). Time segment 1 (TSEG1) values are programmable as shown in Table 10-8.

[1] In this case, PHASE_SEG1 must be at least 2 time quanta (Tq).

Table 10-7. Time Segment 2 Values

TSEG22	TSEG21	TSEG20	Time Segment 2
0	0	0	1 Tq clock cycle[1]
0	0	1	2 Tq clock cycles
:	:	:	:
1	1	0	7 Tq clock cycles
1	1	1	8 Tq clock cycles

[1] This setting is not valid. Please refer to Table 10-35 for valid settings.

Table 10-8. Time Segment 1 Values

TSEG13	TSEG12	TSEG11	TSEG10	Time segment 1
0	0	0	0	1 Tq clock cycle[1]
0	0	0	1	2 Tq clock cycles[1]
0	0	1	0	3 Tq clock cycles[1]
0	0	1	1	4 Tq clock cycles
:	:	:	:	:
1	1	1	0	15 Tq clock cycles
1	1	1	1	16 Tq clock cycles

[1] This setting is not valid. Please refer to Table 10-35 for valid settings.

The bit time is determined by the oscillator frequency, the baud rate prescaler, and the number of time quanta (Tq) clock cycles per bit (as shown in Table 10-7 and Table 10-8).

Eqn. 10-1

$$\text{Bit Time} = \frac{(\text{Prescaler value})}{f_{CANCLK}} \bullet (1 + \text{TimeSegment1} + \text{TimeSegment2})$$

10.3.2.5 MSCAN Receiver Flag Register (CANRFLG)

A flag can be cleared only by software (writing a 1 to the corresponding bit position) when the condition which caused the setting is no longer valid. Every flag has an associated interrupt enable bit in the CANRIER register.

	7	6	5	4	3	2	1	0
R	WUPIF	CSCIF	RSTAT1	RSTAT0	TSTAT1	TSTAT0	OVRIF	RXF
W								
Reset:	0	0	0	0	0	0	0	0

= Unimplemented

Figure 10-8. MSCAN Receiver Flag Register (CANRFLG)

NOTE

The CANRFLG register is held in the reset state[1] when the initialization mode is active (INITRQ = 1 and INITAK = 1). This register is writable again as soon as the initialization mode is exited (INITRQ = 0 and INITAK = 0).

Read: Anytime
Write: Anytime when out of initialization mode, except RSTAT[1:0] and TSTAT[1:0] flags which are read-only; write of 1 clears flag; write of 0 is ignored.

Table 10-9. CANRFLG Register Field Descriptions

Field	Description
7 WUPIF	**Wake-Up Interrupt Flag** — If the MSCAN detects CAN bus activity while in sleep mode (see Section 10.4.5.4, "MSCAN Sleep Mode,") and WUPE = 1 in CANTCTL0 (see Section 10.3.2.1, "MSCAN Control Register 0 (CANCTL0)"), the module will set WUPIF. If not masked, a wake-up interrupt is pending while this flag is set. 0 No wake-up activity observed while in sleep mode 1 MSCAN detected activity on the CAN bus and requested wake-up
6 CSCIF	**CAN Status Change Interrupt Flag** — This flag is set when the MSCAN changes its current CAN bus status due to the actual value of the transmit error counter (TEC) and the receive error counter (REC). An additional 4-bit (RSTAT[1:0], TSTAT[1:0]) status register, which is split into separate sections for TEC/REC, informs the system on the actual CAN bus status (see Section 10.3.2.6, "MSCAN Receiver Interrupt Enable Register (CANRIER)"). If not masked, an error interrupt is pending while this flag is set. CSCIF provides a blocking interrupt. That guarantees that the receiver/transmitter status bits (RSTAT/TSTAT) are only updated when no CAN status change interrupt is pending. If the TECs/RECs change their current value after the CSCIF is asserted, which would cause an additional state change in the RSTAT/TSTAT bits, these bits keep their status until the current CSCIF interrupt is cleared again. 0 No change in CAN bus status occurred since last interrupt 1 MSCAN changed current CAN bus status
5:4 RSTAT[1:0]	**Receiver Status Bits** — The values of the error counters control the actual CAN bus status of the MSCAN. As soon as the status change interrupt flag (CSCIF) is set, these bits indicate the appropriate receiver related CAN bus status of the MSCAN. The coding for the bits RSTAT1, RSTAT0 is: 00 RxOK: 0 ≤ receive error counter ≤ 96 01 RxWRN: 96 < receive error counter ≤ 127 10 RxERR: 127 < receive error counter 11 Bus-off[1]: transmit error counter > 255
3:2 TSTAT[1:0]	**Transmitter Status Bits** — The values of the error counters control the actual CAN bus status of the MSCAN. As soon as the status change interrupt flag (CSCIF) is set, these bits indicate the appropriate transmitter related CAN bus status of the MSCAN. The coding for the bits TSTAT1, TSTAT0 is: 00 TxOK: 0 ≤ transmit error counter ≤ 96 01 TxWRN: 96 < transmit error counter ≤ 127 10 TxERR: 127 < transmit error counter ≤ 255 11 Bus-Off: transmit error counter > 255

1. The RSTAT[1:0], TSTAT[1:0] bits are not affected by initialization mode.

Table 10-9. CANRFLG Register Field Descriptions (continued)

Field	Description
1 OVRIF	**Overrun Interrupt Flag** — This flag is set when a data overrun condition occurs. If not masked, an error interrupt is pending while this flag is set. 0 No data overrun condition 1 A data overrun detected
0 RXF[2]	**Receive Buffer Full Flag** — RXF is set by the MSCAN when a new message is shifted in the receiver FIFO. This flag indicates whether the shifted buffer is loaded with a correctly received message (matching identifier, matching cyclic redundancy code (CRC) and no other errors detected). After the CPU has read that message from the RxFG buffer in the receiver FIFO, the RXF flag must be cleared to release the buffer. A set RXF flag prohibits the shifting of the next FIFO entry into the foreground buffer (RxFG). If not masked, a receive interrupt is pending while this flag is set. 0 No new message available within the RxFG 1 The receiver FIFO is not empty. A new message is available in the RxFG

[1] Redundant Information for the most critical CAN bus status which is "bus-off". This only occurs if the Tx error counter exceeds a number of 255 errors. Bus-off affects the receiver state. As soon as the transmitter leaves its bus-off state the receiver state skips to RxOK too. Refer also to TSTAT[1:0] coding in this register.

[2] To ensure data integrity, do not read the receive buffer registers while the RXF flag is cleared. For MCUs with dual CPUs, reading the receive buffer registers while the RXF flag is cleared may result in a CPU fault condition.

10.3.2.6 MSCAN Receiver Interrupt Enable Register (CANRIER)

This register contains the interrupt enable bits for the interrupt flags described in the CANRFLG register.

	7	6	5	4	3	2	1	0
R W	WUPIE	CSCIE	RSTATE1	RSTATE0	TSTATE1	TSTATE0	OVRIE	RXFIE
Reset:	0	0	0	0	0	0	0	0

Figure 10-9. MSCAN Receiver Interrupt Enable Register (CANRIER)

NOTE

The CANRIER register is held in the reset state when the initialization mode is active (INITRQ=1 and INITAK=1). This register is writable when not in initialization mode (INITRQ=0 and INITAK=0).

The RSTATE[1:0], TSTATE[1:0] bits are not affected by initialization mode.

Read: Anytime
Write: Anytime when not in initialization mode

Table 10-10. CANRIER Register Field Descriptions

Field	Description
7 WUPIE[1]	**Wake-Up Interrupt Enable** 0 No interrupt request is generated from this event. 1 A wake-up event causes a Wake-Up interrupt request.
6 CSCIE	**CAN Status Change Interrupt Enable** 0 No interrupt request is generated from this event. 1 A CAN Status Change event causes an error interrupt request.
5:4 RSTATE[1:0]	**Receiver Status Change Enable** — These RSTAT enable bits control the sensitivity level in which receiver state changes are causing CSCIF interrupts. Independent of the chosen sensitivity level the RSTAT flags continue to indicate the actual receiver state and are only updated if no CSCIF interrupt is pending. 00 Do not generate any CSCIF interrupt caused by receiver state changes. 01 Generate CSCIF interrupt only if the receiver enters or leaves "bus-off" state. Discard other receiver state changes for generating CSCIF interrupt. 10 Generate CSCIF interrupt only if the receiver enters or leaves "RxErr" or "bus-off"[2] state. Discard other receiver state changes for generating CSCIF interrupt. 11 Generate CSCIF interrupt on all state changes.
3:2 TSTATE[1:0]	**Transmitter Status Change Enable** — These TSTAT enable bits control the sensitivity level in which transmitter state changes are causing CSCIF interrupts. Independent of the chosen sensitivity level, the TSTAT flags continue to indicate the actual transmitter state and are only updated if no CSCIF interrupt is pending. 00 Do not generate any CSCIF interrupt caused by transmitter state changes. 01 Generate CSCIF interrupt only if the transmitter enters or leaves "bus-off" state. Discard other transmitter state changes for generating CSCIF interrupt. 10 Generate CSCIF interrupt only if the transmitter enters or leaves "TxErr" or "bus-off" state. Discard other transmitter state changes for generating CSCIF interrupt. 11 Generate CSCIF interrupt on all state changes.
1 OVRIE	**Overrun Interrupt Enable** 0 No interrupt request is generated from this event. 1 An overrun event causes an error interrupt request.
0 RXFIE	**Receiver Full Interrupt Enable** 0 No interrupt request is generated from this event. 1 A receive buffer full (successful message reception) event causes a receiver interrupt request.

[1] WUPIE and WUPE (see Section 10.3.2.1, "MSCAN Control Register 0 (CANCTL0)") must both be enabled if the recovery mechanism from stop or wait is required.

[2] Bus-off state is defined by the CAN standard (see Bosch CAN 2.0A/B protocol specification: for only transmitters. Because the only possible state change for the transmitter from bus-off to TxOK also forces the receiver to skip its current state to RxOK, the coding of the RXSTAT[1:0] flags define an additional bus-off state for the receiver (see Section 10.3.2.5, "MSCAN Receiver Flag Register (CANRFLG)").

10.3.2.7 MSCAN Transmitter Flag Register (CANTFLG)

The transmit buffer empty flags each have an associated interrupt enable bit in the CANTIER register.

	7	6	5	4	3	2	1	0
R	0	0	0	0	0	TXE2	TXE1	TXE0
W								
Reset:	0	0	0	0	0	1	1	1

= Unimplemented

Figure 10-10. MSCAN Transmitter Flag Register (CANTFLG)

NOTE

The CANTFLG register is held in the reset state when the initialization mode is active (INITRQ = 1 and INITAK = 1). This register is writable when not in initialization mode (INITRQ = 0 and INITAK = 0).

Read: Anytime
Write: Anytime for TXEx flags when not in initialization mode; write of 1 clears flag, write of 0 is ignored

Table 10-11. CANTFLG Register Field Descriptions

Field	Description
2:0 TXE[2:0]	**Transmitter Buffer Empty** — This flag indicates that the associated transmit message buffer is empty, and thus not scheduled for transmission. The CPU must clear the flag after a message is set up in the transmit buffer and is due for transmission. The MSCAN sets the flag after the message is sent successfully. The flag is also set by the MSCAN when the transmission request is successfully aborted due to a pending abort request (see Section 10.3.2.9, "MSCAN Transmitter Message Abort Request Register (CANTARQ)"). If not masked, a transmit interrupt is pending while this flag is set. Clearing a TXEx flag also clears the corresponding ABTAKx (see Section 10.3.2.10, "MSCAN Transmitter Message Abort Acknowledge Register (CANTAAK)"). When a TXEx flag is set, the corresponding ABTRQx bit is cleared (see Section 10.3.2.9, "MSCAN Transmitter Message Abort Request Register (CANTARQ)"). When listen-mode is active (see Section 10.3.2.2, "MSCAN Control Register 1 (CANCTL1)") the TXEx flags cannot be cleared and no transmission is started. Read and write accesses to the transmit buffer will be blocked, if the corresponding TXEx bit is cleared (TXEx = 0) and the buffer is scheduled for transmission. 0 The associated message buffer is full (loaded with a message due for transmission) 1 The associated message buffer is empty (not scheduled)

10.3.2.8 MSCAN Transmitter Interrupt Enable Register (CANTIER)

This register contains the interrupt enable bits for the transmit buffer empty interrupt flags.

	7	6	5	4	3	2	1	0
R	0	0	0	0	0	TXEIE2	TXEIE1	TXEIE0
W								
Reset:	0	0	0	0	0	0	0	0

= Unimplemented

Figure 10-11. MSCAN Transmitter Interrupt Enable Register (CANTIER)

NOTE

The CANTIER register is held in the reset state when the initialization mode is active (INITRQ = 1 and INITAK = 1). This register is writable when not in initialization mode (INITRQ = 0 and INITAK = 0).

Read: Anytime
Write: Anytime when not in initialization mode

Table 10-12. CANTIER Register Field Descriptions

Field	Description
2:0 TXEIE[2:0]	**Transmitter Empty Interrupt Enable** 0 No interrupt request is generated from this event. 1 A transmitter empty (transmit buffer available for transmission) event causes a transmitter empty interrupt request.

10.3.2.9 MSCAN Transmitter Message Abort Request Register (CANTARQ)

The CANTARQ register allows abort request of queued messages as described below.

	7	6	5	4	3	2	1	0
R	0	0	0	0	0	ABTRQ2	ABTRQ1	ABTRQ0
W								
Reset:	0	0	0	0	0	0	0	0

= Unimplemented

Figure 10-12. MSCAN Transmitter Message Abort Request Register (CANTARQ)

NOTE

The CANTARQ register is held in the reset state when the initialization mode is active (INITRQ = 1 and INITAK = 1). This register is writable when not in initialization mode (INITRQ = 0 and INITAK = 0).

Read: Anytime
Write: Anytime when not in initialization mode

Table 10-13. CANTARQ Register Field Descriptions

Field	Description
2:0 ABTRQ[2:0]	**Abort Request** — The CPU sets the ABTRQx bit to request that a scheduled message buffer (TXEx = 0) be aborted. The MSCAN grants the request if the message has not already started transmission, or if the transmission is not successful (lost arbitration or error). When a message is aborted, the associated TXE (see Section 10.3.2.7, "MSCAN Transmitter Flag Register (CANTFLG)") and abort acknowledge flags (ABTAK, see Section 10.3.2.10, "MSCAN Transmitter Message Abort Acknowledge Register (CANTAAK)") are set and a transmit interrupt occurs if enabled. The CPU cannot reset ABTRQx. ABTRQx is reset whenever the associated TXE flag is set. 0 No abort request 1 Abort request pending

10.3.2.10 MSCAN Transmitter Message Abort Acknowledge Register (CANTAAK)

The CANTAAK register indicates the successful abort of a queued message, if requested by the appropriate bits in the CANTARQ register.

	7	6	5	4	3	2	1	0
R	0	0	0	0	0	ABTAK2	ABTAK1	ABTAK0
W								
Reset:	0	0	0	0	0	0	0	0

= Unimplemented

Figure 10-13. MSCAN Transmitter Message Abort Acknowledge Register (CANTAAK)

NOTE

The CANTAAK register is held in the reset state when the initialization mode is active (INITRQ = 1 and INITAK = 1).

Read: Anytime
Write: Unimplemented for ABTAKx flags

Table 10-14. CANTAAK Register Field Descriptions

Field	Description
2:0 ABTAK[2:0]	**Abort Acknowledge** — This flag acknowledges that a message was aborted due to a pending abort request from the CPU. After a particular message buffer is flagged empty, this flag can be used by the application software to identify whether the message was aborted successfully or was sent anyway. The ABTAKx flag is cleared whenever the corresponding TXE flag is cleared. 0 The message was not aborted. 1 The message was aborted.

10.3.2.11 MSCAN Transmit Buffer Selection Register (CANTBSEL)

The CANTBSEL register allows the selection of the actual transmit message buffer, which then will be accessible in the CANTXFG register space.

	7	6	5	4	3	2	1	0
R	0	0	0	0	0	TX2	TX1	TX0
W								
Reset:	0	0	0	0	0	0	0	0

= Unimplemented

Figure 10-14. MSCAN Transmit Buffer Selection Register (CANTBSEL)

NOTE

The CANTBSEL register is held in the reset state when the initialization mode is active (INITRQ = 1 and INITAK=1). This register is writable when not in initialization mode (INITRQ = 0 and INITAK = 0).

Read: Find the lowest ordered bit set to 1, all other bits will be read as 0
Write: Anytime when not in initialization mode

Table 10-15. CANTBSEL Register Field Descriptions

Field	Description
2:0 TX[2:0]	**Transmit Buffer Select** — The lowest numbered bit places the respective transmit buffer in the CANTXFG register space (e.g., TX1 = 1 and TX0 = 1 selects transmit buffer TX0; TX1 = 1 and TX0 = 0 selects transmit buffer TX1). Read and write accesses to the selected transmit buffer will be blocked, if the corresponding TXEx bit is cleared and the buffer is scheduled for transmission (see Section 10.3.2.7, "MSCAN Transmitter Flag Register (CANTFLG)"). 0 The associated message buffer is deselected 1 The associated message buffer is selected, if lowest numbered bit

The following gives a short programming example of the usage of the CANTBSEL register:

To get the next available transmit buffer, application software must read the CANTFLG register and write this value back into the CANTBSEL register. In this example Tx buffers TX1 and TX2 are available. The value read from CANTFLG is therefore 0b0000_0110. When writing this value back to CANTBSEL, the Tx buffer TX1 is selected in the CANTXFG because the lowest numbered bit set to 1 is at bit position 1. Reading back this value out of CANTBSEL results in 0b0000_0010, because only the lowest numbered bit position set to 1 is presented. This mechanism eases the application software the selection of the next available Tx buffer.

- LDD CANTFLG; value read is 0b0000_0110
- STD CANTBSEL; value written is 0b0000_0110
- LDD CANTBSEL; value read is 0b0000_0010

If all transmit message buffers are deselected, no accesses are allowed to the CANTXFG registers.

10.3.2.12 MSCAN Identifier Acceptance Control Register (CANIDAC)

The CANIDAC register is used for identifier acceptance control as described below.

	7	6	5	4	3	2	1	0
R	0	0	IDAM1	IDAM0	0	IDHIT2	IDHIT1	IDHIT0
W								
Reset:	0	0	0	0	0	0	0	0

= Unimplemented

Figure 10-15. MSCAN Identifier Acceptance Control Register (CANIDAC)

Read: Anytime
Write: Anytime in initialization mode (INITRQ = 1 and INITAK = 1), except bits IDHITx, which are read-only

Table 10-16. CANIDAC Register Field Descriptions

Field	Description
5:4 IDAM[1:0]	**Identifier Acceptance Mode** — The CPU sets these flags to define the identifier acceptance filter organization (see Section 10.4.3, "Identifier Acceptance Filter"). Table 10-17 summarizes the different settings. In filter closed mode, no message is accepted such that the foreground buffer is never reloaded.
2:0 IDHIT[2:0]	Identifier Acceptance Hit Indicator — The MSCAN sets these flags to indicate an identifier acceptance hit (see Section 10.4.3, "Identifier Acceptance Filter"). Table 10-18 summarizes the different settings.

Table 10-17. Identifier Acceptance Mode Settings

IDAM1	IDAM0	Identifier Acceptance Mode
0	0	Two 32-bit acceptance filters
0	1	Four 16-bit acceptance filters
1	0	Eight 8-bit acceptance filters
1	1	Filter closed

Table 10-18. Identifier Acceptance Hit Indication

IDHIT2	IDHIT1	IDHIT0	Identifier Acceptance Hit
0	0	0	Filter 0 hit
0	0	1	Filter 1 hit
0	1	0	Filter 2 hit
0	1	1	Filter 3 hit
1	0	0	Filter 4 hit
1	0	1	Filter 5 hit
1	1	0	Filter 6 hit
1	1	1	Filter 7 hit

The IDHITx indicators are always related to the message in the foreground buffer (RxFG). When a message gets shifted into the foreground buffer of the receiver FIFO the indicators are updated as well.

10.3.2.13 MSCAN Reserved Register

This register is reserved for factory testing of the MSCAN module and is not available in normal system operation modes.

	7	6	5	4	3	2	1	0
R	0	0	0	0	0	0	0	0
W								
Reset:	0	0	0	0	0	0	0	0

= Unimplemented

Figure 10-16. MSCAN Reserved Register

Read: Always read 0x0000 in normal system operation modes
Write: Unimplemented in normal system operation modes

NOTE

Writing to this register when in special modes can alter the MSCAN functionality.

10.3.2.14 MSCAN Miscellaneous Register (CANMISC)

This register provides additional features.

	7	6	5	4	3	2	1	0
R	0	0	0	0	0	0	0	BOHOLD
W								
Reset:	0	0	0	0	0	0	0	0

= Unimplemented

Figure 10-17. MSCAN Miscellaneous Register (CANMISC)

Read: Anytime
Write: Anytime; write of '1' clears flag; write of '0' ignored

Table 10-19. CANMISC Register Field Descriptions

Field	Description
0 BOHOLD	**Bus-off State Hold Until User Request** — If BORM is set in Section 10.3.2.2, "MSCAN Control Register 1 (CANCTL1), this bit indicates whether the module has entered the bus-off state. Clearing this bit requests the recovery from bus-off. Refer to Section 10.5.2, "Bus-Off Recovery," for details. 0 Module is not bus-off or recovery has been requested by user in bus-off state 1 Module is bus-off and holds this state until user request

10.3.2.15 MSCAN Receive Error Counter (CANRXERR)

This register reflects the status of the MSCAN receive error counter.

	7	6	5	4	3	2	1	0
R	RXERR7	RXERR6	RXERR5	RXERR4	RXERR3	RXERR2	RXERR1	RXERR0
W								
Reset:	0	0	0	0	0	0	0	0

= Unimplemented

Figure 10-18. MSCAN Receive Error Counter (CANRXERR)

Read: Only when in sleep mode (SLPRQ = 1 and SLPAK = 1) or initialization mode (INITRQ = 1 and INITAK = 1)

Write: Unimplemented

NOTE

Reading this register when in any other mode other than sleep or initialization mode may return an incorrect value. For MCUs with dual CPUs, this may result in a CPU fault condition.

Writing to this register when in special modes can alter the MSCAN functionality.

10.3.2.16 MSCAN Transmit Error Counter (CANTXERR)

This register reflects the status of the MSCAN transmit error counter.

	7	6	5	4	3	2	1	0
R	TXERR7	TXERR6	TXERR5	TXERR4	TXERR3	TXERR2	TXERR1	TXERR0
W								
Reset:	0	0	0	0	0	0	0	0

= Unimplemented

Figure 10-19. MSCAN Transmit Error Counter (CANTXERR)

Read: Only when in sleep mode (SLPRQ = 1 and SLPAK = 1) or initialization mode (INITRQ = 1 and INITAK = 1)

Write: Unimplemented

NOTE

Reading this register when in any other mode other than sleep or initialization mode, may return an incorrect value. For MCUs with dual CPUs, this may result in a CPU fault condition.

Writing to this register when in special modes can alter the MSCAN functionality.

10.3.2.17 MSCAN Identifier Acceptance Registers (CANIDAR0-7)

On reception, each message is written into the background receive buffer. The CPU is only signalled to read the message if it passes the criteria in the identifier acceptance and identifier mask registers (accepted); otherwise, the message is overwritten by the next message (dropped).

The acceptance registers of the MSCAN are applied on the IDR0–IDR3 registers (see Section 10.3.3.1, "Identifier Registers (IDR0–IDR3)") of incoming messages in a bit by bit manner (see Section 10.4.3, "Identifier Acceptance Filter").

For extended identifiers, all four acceptance and mask registers are applied. For standard identifiers, only the first two (CANIDAR0/1, CANIDMR0/1) are applied.

Module Base + 0x0010 (CANIDAR0)
0x0011 (CANIDAR1)
0x0012 (CANIDAR2)
0x0013 (CANIDAR3)

	7	6	5	4	3	2	1	0
R/W	AC7	AC6	AC5	AC4	AC3	AC2	AC1	AC0
Reset	0	0	0	0	0	0	0	0

	7	6	5	4	3	2	1	0
R/W	AC7	AC6	AC5	AC4	AC3	AC2	AC1	AC0
Reset	0	0	0	0	0	0	0	0

	7	6	5	4	3	2	1	0
R/W	AC7	AC6	AC5	AC4	AC3	AC2	AC1	AC0
Reset	0	0	0	0	0	0	0	0

	7	6	5	4	3	2	1	0
R/W	AC7	AC6	AC5	AC4	AC3	AC2	AC1	AC0
Reset	0	0	0	0	0	0	0	0

Figure 10-20. MSCAN Identifier Acceptance Registers (First Bank) — CANIDAR0–CANIDAR3

Read: Anytime

Write: Anytime in initialization mode (INITRQ = 1 and INITAK = 1)

Table 10-20. CANIDAR0–CANIDAR3 Register Field Descriptions

Field	Description
7:0 AC[7:0]	**Acceptance Code Bits** — AC[7:0] comprise a user-defined sequence of bits with which the corresponding bits of the related identifier register (IDRn) of the receive message buffer are compared. The result of this comparison is then masked with the corresponding identifier mask register.

Module Base + 0x0018 (CANIDAR4)
0x0019 (CANIDAR5)
0x001A (CANIDAR6)
0x001B (CANIDAR7)

	7	6	5	4	3	2	1	0
R/W	AC7	AC6	AC5	AC4	AC3	AC2	AC1	AC0
Reset	0	0	0	0	0	0	0	0

	7	6	5	4	3	2	1	0
R/W	AC7	AC6	AC5	AC4	AC3	AC2	AC1	AC0
Reset	0	0	0	0	0	0	0	0

	7	6	5	4	3	2	1	0
R/W	AC7	AC6	AC5	AC4	AC3	AC2	AC1	AC0
Reset	0	0	0	0	0	0	0	0

	7	6	5	4	3	2	1	0
R/W	AC7	AC6	AC5	AC4	AC3	AC2	AC1	AC0
Reset	0	0	0	0	0	0	0	0

Figure 10-21. MSCAN Identifier Acceptance Registers (Second Bank) — CANIDAR4–CANIDAR7

Read: Anytime

Write: Anytime in initialization mode (INITRQ = 1 and INITAK = 1)

Table 10-21. CANIDAR4–CANIDAR7 Register Field Descriptions

Field	Description
7:0 AC[7:0]	**Acceptance Code Bits** — AC[7:0] comprise a user-defined sequence of bits with which the corresponding bits of the related identifier register (IDRn) of the receive message buffer are compared. The result of this comparison is then masked with the corresponding identifier mask register.

10.3.2.18 MSCAN Identifier Mask Registers (CANIDMR0–CANIDMR7)

The identifier mask register specifies which of the corresponding bits in the identifier acceptance register are relevant for acceptance filtering. To receive standard identifiers in 32 bit filter mode, it is required to program the last three bits (AM[2:0]) in the mask registers CANIDMR1 and CANIDMR5 to "don't care." To receive standard identifiers in 16 bit filter mode, it is required to program the last three bits (AM[2:0]) in the mask registers CANIDMR1, CANIDMR3, CANIDMR5, and CANIDMR7 to "don't care."

Module Base + 0x0014 (CANIDMR0)
0x0015 (CANIDMR1)
0x0016 (CANIDMR2)
0x0017 (CANIDMR3)

	7	6	5	4	3	2	1	0
R W	AM7	AM6	AM5	AM4	AM3	AM2	AM1	AM0
Reset	0	0	0	0	0	0	0	0

	7	6	5	4	3	2	1	0
R W	AM7	AM6	AM5	AM4	AM3	AM2	AM1	AM0
Reset	0	0	0	0	0	0	0	0

	7	6	5	4	3	2	1	0
R W	AM7	AM6	AM5	AM4	AM3	AM2	AM1	AM0
Reset	0	0	0	0	0	0	0	0

	7	6	5	4	3	2	1	0
R W	AM7	AM6	AM5	AM4	AM3	AM2	AM1	AM0
Reset	0	0	0	0	0	0	0	0

Figure 10-22. MSCAN Identifier Mask Registers (First Bank) — CANIDMR0–CANIDMR3

Read: Anytime
Write: Anytime in initialization mode (INITRQ = 1 and INITAK = 1)

Table 10-22. CANIDMR0–CANIDMR3 Register Field Descriptions

Field	Description
7:0 AM[7:0]	**Acceptance Mask Bits** — If a particular bit in this register is cleared, this indicates that the corresponding bit in the identifier acceptance register must be the same as its identifier bit before a match is detected. The message is accepted if all such bits match. If a bit is set, it indicates that the state of the corresponding bit in the identifier acceptance register does not affect whether or not the message is accepted. 0 Match corresponding acceptance code register and identifier bits 1 Ignore corresponding acceptance code register bit

Module Base + 0x001C (CANIDMR4)
0x001D (CANIDMR5)
0x001E (CANIDMR6)
0x001F (CANIDMR7)

	7	6	5	4	3	2	1	0
R W	AM7	AM6	AM5	AM4	AM3	AM2	AM1	AM0
Reset	0	0	0	0	0	0	0	0

	7	6	5	4	3	2	1	0
R W	AM7	AM6	AM5	AM4	AM3	AM2	AM1	AM0
Reset	0	0	0	0	0	0	0	0

	7	6	5	4	3	2	1	0
R W	AM7	AM6	AM5	AM4	AM3	AM2	AM1	AM0
Reset	0	0	0	0	0	0	0	0

	7	6	5	4	3	2	1	0
R W	AM7	AM6	AM5	AM4	AM3	AM2	AM1	AM0
Reset	0	0	0	0	0	0	0	0

Figure 10-23. MSCAN Identifier Mask Registers (Second Bank) — CANIDMR4–CANIDMR7

Read: Anytime
Write: Anytime in initialization mode (INITRQ = 1 and INITAK = 1)

Table 10-23. CANIDMR4–CANIDMR7 Register Field Descriptions

Field	Description
7:0 AM[7:0]	**Acceptance Mask Bits** — If a particular bit in this register is cleared, this indicates that the corresponding bit in the identifier acceptance register must be the same as its identifier bit before a match is detected. The message is accepted if all such bits match. If a bit is set, it indicates that the state of the corresponding bit in the identifier acceptance register does not affect whether or not the message is accepted. 0 Match corresponding acceptance code register and identifier bits 1 Ignore corresponding acceptance code register bit

10.3.3 Programmer's Model of Message Storage

The following section details the organization of the receive and transmit message buffers and the associated control registers.

To simplify the programmer interface, the receive and transmit message buffers have the same outline. Each message buffer allocates 16 bytes in the memory map containing a 13 byte data structure.

An additional transmit buffer priority register (TBPR) is defined for the transmit buffers. Within the last two bytes of this memory map, the MSCAN stores a special 16-bit time stamp, which is sampled from an internal timer after successful transmission or reception of a message. This feature is only available for transmit and receiver buffers, if the TIME bit is set (see Section 10.3.2.1, "MSCAN Control Register 0 (CANCTL0)").

The time stamp register is written by the MSCAN. The CPU can only read these registers.

Table 10-24. Message Buffer Organization

Offset Address	Register	Access
0x00X0	Identifier Register 0	
0x00X1	Identifier Register 1	
0x00X2	Identifier Register 2	
0x00X3	Identifier Register 3	
0x00X4	Data Segment Register 0	
0x00X5	Data Segment Register 1	
0x00X6	Data Segment Register 2	
0x00X7	Data Segment Register 3	
0x00X8	Data Segment Register 4	
0x00X9	Data Segment Register 5	
0x00XA	Data Segment Register 6	
0x00XB	Data Segment Register 7	
0x00XC	Data Length Register	
0x00XD	Transmit Buffer Priority Register[1]	
0x00XE	Time Stamp Register (High Byte)[2]	
0x00XF	Time Stamp Register (Low Byte)[3]	

[1] Not applicable for receive buffers
[2] Read-only for CPU
[3] Read-only for CPU

Figure 10-24 shows the common 13-byte data structure of receive and transmit buffers for extended identifiers. The mapping of standard identifiers into the IDR registers is shown in Figure 10-25.

All bits of the receive and transmit buffers are 'x' out of reset because of RAM-based implementation[1]. All reserved or unused bits of the receive and transmit buffers always read 'x'.

1. Exception: The transmit priority registers are 0 out of reset.

Figure 10-24. Receive/Transmit Message Buffer — Extended Identifier Mapping

Register Name		Bit 7	6	5	4	3	2	1	Bit0
IDR0	R W	ID28	ID27	ID26	ID25	ID24	ID23	ID22	ID21

Figure 10-24. Receive/Transmit Message Buffer — Extended Identifier Mapping

Register Name		Bit 7	6	5	4	3	2	1	Bit0
IDR1	R/W	ID20	ID19	ID18	SRR (=1)	IDE (=1)	ID17	ID16	ID15
IDR2	R/W	ID14	ID13	ID12	ID11	ID10	ID9	ID8	ID7
IDR3	R/W	ID6	ID5	ID4	ID3	ID2	ID1	ID0	RTR
DSR0	R/W	DB7	DB6	DB5	DB4	DB3	DB2	DB1	DB0
DSR1	R/W	DB7	DB6	DB5	DB4	DB3	DB2	DB1	DB0
DSR2	R/W	DB7	DB6	DB5	DB4	DB3	DB2	DB1	DB0
DSR3	R/W	DB7	DB6	DB5	DB4	DB3	DB2	DB1	DB0
DSR4	R/W	DB7	DB6	DB5	DB4	DB3	DB2	DB1	DB0
DSR5	R/W	DB7	DB6	DB5	DB4	DB3	DB2	DB1	DB0
DSR6	R/W	DB7	DB6	DB5	DB4	DB3	DB2	DB1	DB0
DSR7	R/W	DB7	DB6	DB5	DB4	DB3	DB2	DB1	DB0
DLR	R/W					DLC3	DLC2	DLC1	DLC0

= Unused, always read 'x'

Read: For transmit buffers, anytime when TXEx flag is set (see Section 10.3.2.7, "MSCAN Transmitter Flag Register (CANTFLG)") and the corresponding transmit buffer is selected in CANTBSEL (see Section 10.3.2.11, "MSCAN Transmit Buffer Selection Register (CANTBSEL)"). For receive buffers, only when RXF flag is set (see Section 10.3.2.5, "MSCAN Receiver Flag Register (CANRFLG)").

Write: For transmit buffers, anytime when TXEx flag is set (see Section 10.3.2.7, "MSCAN Transmitter Flag Register (CANTFLG)") and the corresponding transmit buffer is selected in CANTBSEL (see Section 10.3.2.11, "MSCAN Transmit Buffer Selection Register (CANTBSEL)"). Unimplemented for receive buffers.

Reset: Undefined (0x00XX) because of RAM-based implementation

Figure 10-25. Receive/Transmit Message Buffer — Standard Identifier Mapping

Register Name		Bit 7	6	5	4	3	2	1	Bit 0
IDR0	R/W	ID10	ID9	ID8	ID7	ID6	ID5	ID4	ID3
IDR1	R/W	ID2	ID1	ID0	RTR	IDE (=0)			
IDR2	R/W								
IDR3	R/W								

= Unused, always read 'x'

10.3.3.1 Identifier Registers (IDR0–IDR3)

The identifier registers for an extended format identifier consist of a total of 32 bits; ID[28:0], SRR, IDE, and RTR bits. The identifier registers for a standard format identifier consist of a total of 13 bits; ID[10:0], RTR, and IDE bits.

10.3.3.1.1 IDR0–IDR3 for Extended Identifier Mapping

	7	6	5	4	3	2	1	0
R/W	ID28	ID27	ID26	ID25	ID24	ID23	ID22	ID21
Reset:	x	x	x	x	x	x	x	x

Figure 10-26. Identifier Register 0 (IDR0) — Extended Identifier Mapping

Table 10-25. IDR0 Register Field Descriptions — Extended

Field	Description
7:0 ID[28:21]	**Extended Format Identifier** — The identifiers consist of 29 bits (ID[28:0]) for the extended format. ID28 is the most significant bit and is transmitted first on the CAN bus during the arbitration procedure. The priority of an identifier is defined to be highest for the smallest binary number.

	7	6	5	4	3	2	1	0
R W	ID20	ID19	ID18	SRR (=1)	IDE (=1)	ID17	ID16	ID15
Reset:	x	x	x	x	x	x	x	x

Figure 10-27. Identifier Register 1 (IDR1) — Extended Identifier Mapping

Table 10-26. IDR1 Register Field Descriptions — Extended

Field	Description
7:5 ID[20:18]	**Extended Format Identifier —** The identifiers consist of 29 bits (ID[28:0]) for the extended format. ID28 is the most significant bit and is transmitted first on the CAN bus during the arbitration procedure. The priority of an identifier is defined to be highest for the smallest binary number.
4 SRR	**Substitute Remote Request** — This fixed recessive bit is used only in extended format. It must be set to 1 by the user for transmission buffers and is stored as received on the CAN bus for receive buffers.
3 IDE	**ID Extended** — This flag indicates whether the extended or standard identifier format is applied in this buffer. In the case of a receive buffer, the flag is set as received and indicates to the CPU how to process the buffer identifier registers. In the case of a transmit buffer, the flag indicates to the MSCAN what type of identifier to send. 0 Standard format (11 bit) 1 Extended format (29 bit)
2:0 ID[17:15]	**Extended Format Identifier —** The identifiers consist of 29 bits (ID[28:0]) for the extended format. ID28 is the most significant bit and is transmitted first on the CAN bus during the arbitration procedure. The priority of an identifier is defined to be highest for the smallest binary number.

	7	6	5	4	3	2	1	0
R W	ID14	ID13	ID12	ID11	ID10	ID9	ID8	ID7
Reset:	x	x	x	x	x	x	x	x

Figure 10-28. Identifier Register 2 (IDR2) — Extended Identifier Mapping

Table 10-27. IDR2 Register Field Descriptions — Extended

Field	Description
7:0 ID[14:7]	**Extended Format Identifier —** The identifiers consist of 29 bits (ID[28:0]) for the extended format. ID28 is the most significant bit and is transmitted first on the CAN bus during the arbitration procedure. The priority of an identifier is defined to be highest for the smallest binary number.

	7	6	5	4	3	2	1	0
R W	ID6	ID5	ID4	ID3	ID2	ID1	ID0	RTR
Reset:	x	x	x	x	x	x	x	x

Figure 10-29. Identifier Register 3 (IDR3) — Extended Identifier Mapping

Table 10-28. IDR3 Register Field Descriptions — Extended

Field	Description
7:1 ID[6:0]	**Extended Format Identifier —** The identifiers consist of 29 bits (ID[28:0]) for the extended format. ID28 is the most significant bit and is transmitted first on the CAN bus during the arbitration procedure. The priority of an identifier is defined to be highest for the smallest binary number.
0 RTR	**Remote Transmission Request** — This flag reflects the status of the remote transmission request bit in the CAN frame. In the case of a receive buffer, it indicates the status of the received frame and supports the transmission of an answering frame in software. In the case of a transmit buffer, this flag defines the setting of the RTR bit to be sent. 0 Data frame 1 Remote frame

10.3.3.1.2 IDR0–IDR3 for Standard Identifier Mapping

	7	6	5	4	3	2	1	0
R W	ID10	ID9	ID8	ID7	ID6	ID5	ID4	ID3
Reset:	x	x	x	x	x	x	x	x

Figure 10-30. Identifier Register 0 — Standard Mapping

Table 10-29. IDR0 Register Field Descriptions — Standard

Field	Description
7:0 ID[10:3]	**Standard Format Identifier —** The identifiers consist of 11 bits (ID[10:0]) for the standard format. ID10 is the most significant bit and is transmitted first on the CAN bus during the arbitration procedure. The priority of an identifier is defined to be highest for the smallest binary number. See also ID bits in Table 10-30.

	7	6	5	4	3	2	1	0
R W	ID2	ID1	ID0	RTR	IDE (=0)			
Reset:	x	x	x	x	x	x	x	x

= Unused; always read 'x'

Figure 10-31. Identifier Register 1 — Standard Mapping

Table 10-30. IDR1 Register Field Descriptions

Field	Description
7:5 ID[2:0]	**Standard Format Identifier —** The identifiers consist of 11 bits (ID[10:0]) for the standard format. ID10 is the most significant bit and is transmitted first on the CAN bus during the arbitration procedure. The priority of an identifier is defined to be highest for the smallest binary number. See also ID bits in Table 10-29.
4 RTR	**Remote Transmission Request** — This flag reflects the status of the Remote Transmission Request bit in the CAN frame. In the case of a receive buffer, it indicates the status of the received frame and supports the transmission of an answering frame in software. In the case of a transmit buffer, this flag defines the setting of the RTR bit to be sent. 0 Data frame 1 Remote frame
3 IDE	**ID Extended** — This flag indicates whether the extended or standard identifier format is applied in this buffer. In the case of a receive buffer, the flag is set as received and indicates to the CPU how to process the buffer identifier registers. In the case of a transmit buffer, the flag indicates to the MSCAN what type of identifier to send. 0 Standard format (11 bit) 1 Extended format (29 bit)

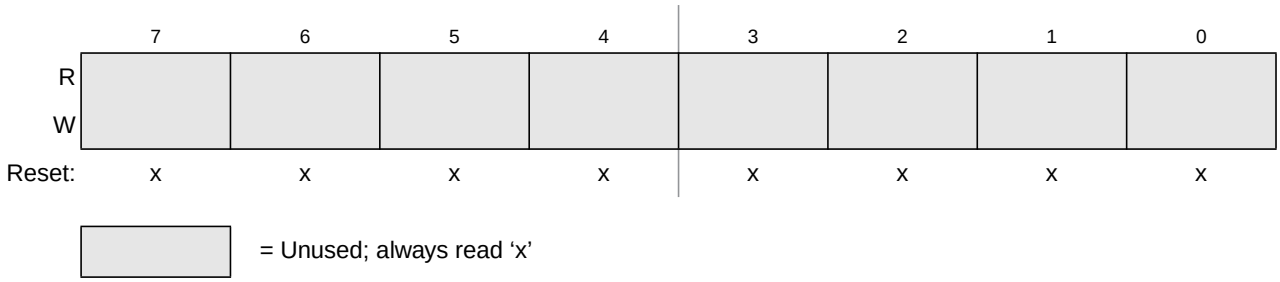

Figure 10-32. Identifier Register 2 — Standard Mapping

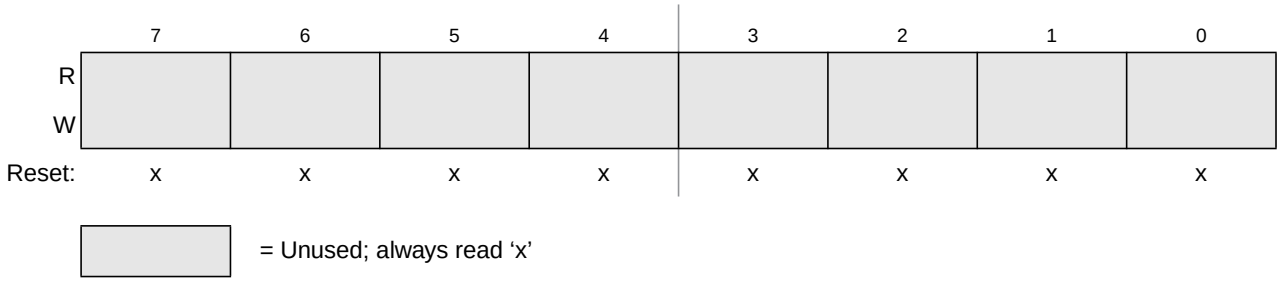

Figure 10-33. Identifier Register 3 — Standard Mapping

10.3.3.2 Data Segment Registers (DSR0-7)

The eight data segment registers, each with bits DB[7:0], contain the data to be transmitted or received. The number of bytes to be transmitted or received is determined by the data length code in the corresponding DLR register.

Module Base + 0x0004 (DSR0)
0x0005 (DSR1)
0x0006 (DSR2)
0x0007 (DSR3)
0x0008 (DSR4)
0x0009 (DSR5)
0x000A (DSR6)
0x000B (DSR7)

	7	6	5	4	3	2	1	0
R W	DB7	DB6	DB5	DB4	DB3	DB2	DB1	DB0
Reset:	x	x	x	x	x	x	x	x

Figure 10-34. Data Segment Registers (DSR0–DSR7) — Extended Identifier Mapping

Table 10-31. DSR0–DSR7 Register Field Descriptions

Field	Description
7:0 DB[7:0]	**Data bits 7:0**

10.3.3.3 Data Length Register (DLR)

This register keeps the data length field of the CAN frame.

	7	6	5	4	3	2	1	0
R W					DLC3	DLC2	DLC1	DLC0
Reset:	x	x	x	x	x	x	x	x

= Unused; always read "x"

Figure 10-35. Data Length Register (DLR) — Extended Identifier Mapping

Table 10-32. DLR Register Field Descriptions

Field	Description
3:0 DLC[3:0]	**Data Length Code Bits** — The data length code contains the number of bytes (data byte count) of the respective message. During the transmission of a remote frame, the data length code is transmitted as programmed while the number of transmitted data bytes is always 0. The data byte count ranges from 0 to 8 for a data frame. Table 10-33 shows the effect of setting the DLC bits.

Table 10-33. Data Length Codes

Data Length Code				Data Byte Count
DLC3	DLC2	DLC1	DLC0	
0	0	0	0	0
0	0	0	1	1
0	0	1	0	2
0	0	1	1	3
0	1	0	0	4
0	1	0	1	5
0	1	1	0	6
0	1	1	1	7
1	0	0	0	8

10.3.3.4 Transmit Buffer Priority Register (TBPR)

This register defines the local priority of the associated message buffer. The local priority is used for the internal prioritization process of the MSCAN and is defined to be highest for the smallest binary number. The MSCAN implements the following internal prioritization mechanisms:

- All transmission buffers with a cleared TXEx flag participate in the prioritization immediately before the SOF (start of frame) is sent.
- The transmission buffer with the lowest local priority field wins the prioritization.

In cases of more than one buffer having the same lowest priority, the message buffer with the lower index number wins.

	7	6	5	4	3	2	1	0
R W	PRIO7	PRIO6	PRIO5	PRIO4	PRIO3	PRIO2	PRIO1	PRIO0
Reset:	0	0	0	0	0	0	0	0

Figure 10-36. Transmit Buffer Priority Register (TBPR)

Read: Anytime when TXEx flag is set (see Section 10.3.2.7, "MSCAN Transmitter Flag Register (CANTFLG)") and the corresponding transmit buffer is selected in CANTBSEL (see Section 10.3.2.11, "MSCAN Transmit Buffer Selection Register (CANTBSEL)").

Write: Anytime when TXEx flag is set (see Section 10.3.2.7, "MSCAN Transmitter Flag Register (CANTFLG)") and the corresponding transmit buffer is selected in CANTBSEL (see Section 10.3.2.11, "MSCAN Transmit Buffer Selection Register (CANTBSEL)").

10.3.3.5 Time Stamp Register (TSRH–TSRL)

If the TIME bit is enabled, the MSCAN will write a time stamp to the respective registers in the active transmit or receive buffer right after the EOF of a valid message on the CAN bus (see Section 10.3.2.1,

"MSCAN Control Register 0 (CANCTL0)"). In case of a transmission, the CPU can only read the time stamp after the respective transmit buffer has been flagged empty.

The timer value, which is used for stamping, is taken from a free running internal CAN bit clock. A timer overrun is not indicated by the MSCAN. The timer is reset (all bits set to 0) during initialization mode. The CPU can only read the time stamp registers.

	7	6	5	4	3	2	1	0
R	TSR15	TSR14	TSR13	TSR12	TSR11	TSR10	TSR9	TSR8
W								
Reset:	x	x	x	x	x	x	x	x

Figure 10-37. Time Stamp Register — High Byte (TSRH)

	7	6	5	4	3	2	1	0
R	TSR7	TSR6	TSR5	TSR4	TSR3	TSR2	TSR1	TSR0
W								
Reset:	x	x	x	x	x	x	x	x

Figure 10-38. Time Stamp Register — Low Byte (TSRL)

Read: Anytime when TXEx flag is set (see Section 10.3.2.7, "MSCAN Transmitter Flag Register (CANTFLG)") and the corresponding transmit buffer is selected in CANTBSEL (see Section 10.3.2.11, "MSCAN Transmit Buffer Selection Register (CANTBSEL)").

Write: Unimplemented

10.4 Functional Description

10.4.1 General

This section provides a complete functional description of the MSCAN. It describes each of the features and modes listed in the introduction.

10.4.2 Message Storage

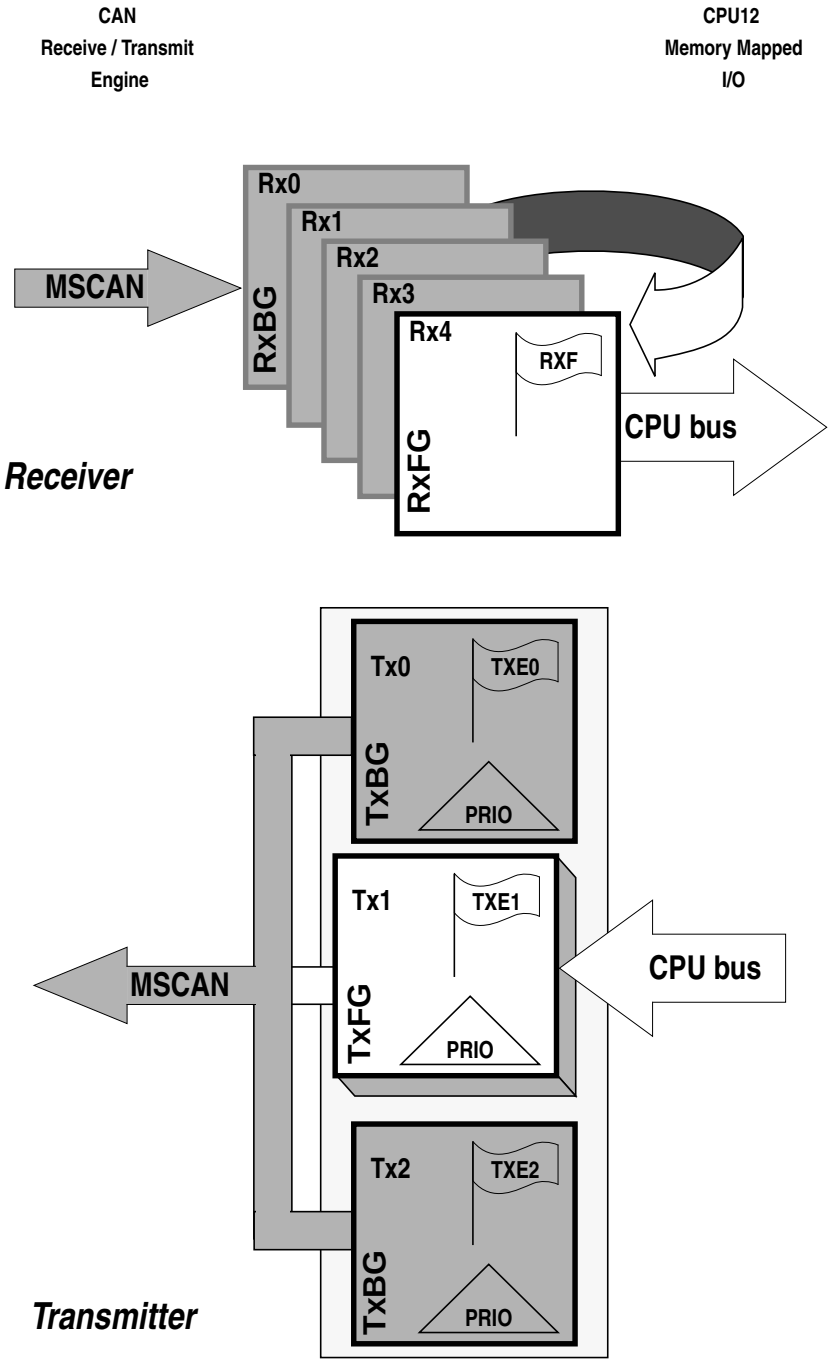

Figure 10-39. User Model for Message Buffer Organization

MSCAN facilitates a sophisticated message storage system which addresses the requirements of a broad range of network applications.

10.4.2.1 Message Transmit Background

Modern application layer software is built upon two fundamental assumptions:

- Any CAN node is able to send out a stream of scheduled messages without releasing the CAN bus between the two messages. Such nodes arbitrate for the CAN bus immediately after sending the previous message and only release the CAN bus in case of lost arbitration.
- The internal message queue within any CAN node is organized such that the highest priority message is sent out first, if more than one message is ready to be sent.

The behavior described in the bullets above cannot be achieved with a single transmit buffer. That buffer must be reloaded immediately after the previous message is sent. This loading process lasts a finite amount of time and must be completed within the inter-frame sequence (IFS) to be able to send an uninterrupted stream of messages. Even if this is feasible for limited CAN bus speeds, it requires that the CPU reacts with short latencies to the transmit interrupt.

A double buffer scheme de-couples the reloading of the transmit buffer from the actual message sending and, therefore, reduces the reactiveness requirements of the CPU. Problems can arise if the sending of a message is finished while the CPU re-loads the second buffer. No buffer would then be ready for transmission, and the CAN bus would be released.

At least three transmit buffers are required to meet the first of the above requirements under all circumstances. The MSCAN has three transmit buffers.

The second requirement calls for some sort of internal prioritization which the MSCAN implements with the "local priority" concept described in Section 10.4.2.2, "Transmit Structures."

10.4.2.2 Transmit Structures

The MSCAN triple transmit buffer scheme optimizes real-time performance by allowing multiple messages to be set up in advance. The three buffers are arranged as shown in Figure 10-39.

All three buffers have a 13-byte data structure similar to the outline of the receive buffers (see Section 10.3.3, "Programmer's Model of Message Storage"). An additional Section 10.3.3.4, "Transmit Buffer Priority Register (TBPR) contains an 8-bit local priority field (PRIO) (see Section 10.3.3.4, "Transmit Buffer Priority Register (TBPR)"). The remaining two bytes are used for time stamping of a message, if required (see Section 10.3.3.5, "Time Stamp Register (TSRH–TSRL)").

To transmit a message, the CPU must identify an available transmit buffer, which is indicated by a set transmitter buffer empty (TXEx) flag (see Section 10.3.2.7, "MSCAN Transmitter Flag Register (CANTFLG)"). If a transmit buffer is available, the CPU must set a pointer to this buffer by writing to the CANTBSEL register (see Section 10.3.2.11, "MSCAN Transmit Buffer Selection Register (CANTBSEL)"). This makes the respective buffer accessible within the CANTXFG address space (see Section 10.3.3, "Programmer's Model of Message Storage"). The algorithmic feature associated with the CANTBSEL register simplifies the transmit buffer selection. In addition, this scheme makes the handler software simpler because only one address area is applicable for the transmit process, and the required address space is minimized.

The CPU then stores the identifier, the control bits, and the data content into one of the transmit buffers. Finally, the buffer is flagged as ready for transmission by clearing the associated TXE flag.

The MSCAN then schedules the message for transmission and signals the successful transmission of the buffer by setting the associated TXE flag. A transmit interrupt (see Section 10.4.7.2, "Transmit Interrupt") is generated[1] when TXEx is set and can be used to drive the application software to re-load the buffer.

If more than one buffer is scheduled for transmission when the CAN bus becomes available for arbitration, the MSCAN uses the local priority setting of the three buffers to determine the prioritization. For this purpose, every transmit buffer has an 8-bit local priority field (PRIO). The application software programs this field when the message is set up. The local priority reflects the priority of this particular message relative to the set of messages being transmitted from this node. The lowest binary value of the PRIO field is defined to be the highest priority. The internal scheduling process takes place whenever the MSCAN arbitrates for the CAN bus. This is also the case after the occurrence of a transmission error.

When a high priority message is scheduled by the application software, it may become necessary to abort a lower priority message in one of the three transmit buffers. Because messages that are already in transmission cannot be aborted, the user must request the abort by setting the corresponding abort request bit (ABTRQ) (see Section 10.3.2.9, "MSCAN Transmitter Message Abort Request Register (CANTARQ)".) The MSCAN then grants the request, if possible, by:

1. Setting the corresponding abort acknowledge flag (ABTAK) in the CANTAAK register.
2. Setting the associated TXE flag to release the buffer.
3. Generating a transmit interrupt. The transmit interrupt handler software can determine from the setting of the ABTAK flag whether the message was aborted (ABTAK = 1) or sent (ABTAK = 0).

10.4.2.3 Receive Structures

The received messages are stored in a five stage input FIFO. The five message buffers are alternately mapped into a single memory area (see Figure 10-39). The background receive buffer (RxBG) is exclusively associated with the MSCAN, but the foreground receive buffer (RxFG) is addressable by the CPU (see Figure 10-39). This scheme simplifies the handler software because only one address area is applicable for the receive process.

All receive buffers have a size of 15 bytes to store the CAN control bits, the identifier (standard or extended), the data contents, and a time stamp, if enabled (see Section 10.3.3, "Programmer's Model of Message Storage").

The receiver full flag (RXF) (see Section 10.3.2.5, "MSCAN Receiver Flag Register (CANRFLG)") signals the status of the foreground receive buffer. When the buffer contains a correctly received message with a matching identifier, this flag is set.

On reception, each message is checked to see whether it passes the filter (see Section 10.4.3, "Identifier Acceptance Filter") and simultaneously is written into the active RxBG. After successful reception of a valid message, the MSCAN shifts the content of RxBG into the receiver FIFO[2], sets the RXF flag, and generates a receive interrupt (see Section 10.4.7.3, "Receive Interrupt") to the CPU[3]. The user's receive handler must read the received message from the RxFG and then reset the RXF flag to acknowledge the interrupt and to release the foreground buffer. A new message, which can follow immediately after the IFS

1. The transmit interrupt occurs only if not masked. A polling scheme can be applied on TXEx also.
2. Only if the RXF flag is not set.
3. The receive interrupt occurs only if not masked. A polling scheme can be applied on RXF also.

field of the CAN frame, is received into the next available RxBG. If the MSCAN receives an invalid message in its RxBG (wrong identifier, transmission errors, etc.) the actual contents of the buffer will be over-written by the next message. The buffer will then not be shifted into the FIFO.

When the MSCAN module is transmitting, the MSCAN receives its own transmitted messages into the background receive buffer, RxBG, but does not shift it into the receiver FIFO, generate a receive interrupt, or acknowledge its own messages on the CAN bus. The exception to this rule is in loopback mode (see Section 10.3.2.2, "MSCAN Control Register 1 (CANCTL1)") where the MSCAN treats its own messages exactly like all other incoming messages. The MSCAN receives its own transmitted messages in the event that it loses arbitration. If arbitration is lost, the MSCAN must be prepared to become a receiver.

An overrun condition occurs when all receive message buffers in the FIFO are filled with correctly received messages with accepted identifiers and another message is correctly received from the CAN bus with an accepted identifier. The latter message is discarded and an error interrupt with overrun indication is generated if enabled (see Section 10.4.7.5, "Error Interrupt"). The MSCAN remains able to transmit messages while the receiver FIFO being filled, but all incoming messages are discarded. As soon as a receive buffer in the FIFO is available again, new valid messages will be accepted.

10.4.3 Identifier Acceptance Filter

The MSCAN identifier acceptance registers (see Section 10.3.2.12, "MSCAN Identifier Acceptance Control Register (CANIDAC)") define the acceptable patterns of the standard or extended identifier (ID[10:0] or ID[28:0]). Any of these bits can be marked 'don't care' in the MSCAN identifier mask registers (see Section 10.3.2.18, "MSCAN Identifier Mask Registers (CANIDMR0–CANIDMR7)").

A filter hit is indicated to the application software by a set receive buffer full flag (RXF = 1) and three bits in the CANIDAC register (see Section 10.3.2.12, "MSCAN Identifier Acceptance Control Register (CANIDAC)"). These identifier hit flags (IDHIT[2:0]) clearly identify the filter section that caused the acceptance. They simplify the application software's task to identify the cause of the receiver interrupt. If more than one hit occurs (two or more filters match), the lower hit has priority.

A very flexible programmable generic identifier acceptance filter has been introduced to reduce the CPU interrupt loading. The filter is programmable to operate in four different modes (see Bosch CAN 2.0A/B protocol specification):

- Two identifier acceptance filters, each to be applied to:
  - The full 29 bits of the extended identifier and to the following bits of the CAN 2.0B frame:
    - Remote transmission request (RTR)
    - Identifier extension (IDE)
    - Substitute remote request (SRR)
  - The 11 bits of the standard identifier plus the RTR and IDE bits of the CAN 2.0A/B messages[1]. This mode implements two filters for a full length CAN 2.0B compliant extended identifier. Figure 10-40 shows how the first 32-bit filter bank (CANIDAR0–CANIDAR3, CANIDMR0–CANIDMR3) produces a filter 0 hit. Similarly, the second filter bank (CANIDAR4–CANIDAR7, CANIDMR4–CANIDMR7) produces a filter 1 hit.

1. Although this mode can be used for standard identifiers, it is recommended to use the four or eight identifier acceptance filters for standard identifiers

- Four identifier acceptance filters, each to be applied to
  - — a) the 14 most significant bits of the extended identifier plus the SRR and IDE bits of CAN 2.0B messages or
  - — b) the 11 bits of the standard identifier, the RTR and IDE bits of CAN 2.0A/B messages. Figure 10-41 shows how the first 32-bit filter bank (CANIDAR0–CANIDA3, CANIDMR0–3CANIDMR) produces filter 0 and 1 hits. Similarly, the second filter bank (CANIDAR4–CANIDAR7, CANIDMR4–CANIDMR7) produces filter 2 and 3 hits.
- Eight identifier acceptance filters, each to be applied to the first 8 bits of the identifier. This mode implements eight independent filters for the first 8 bits of a CAN 2.0A/B compliant standard identifier or a CAN 2.0B compliant extended identifier. Figure 10-42 shows how the first 32-bit filter bank (CANIDAR0–CANIDAR3, CANIDMR0–CANIDMR3) produces filter 0 to 3 hits. Similarly, the second filter bank (CANIDAR4–CANIDAR7, CANIDMR4–CANIDMR7) produces filter 4 to 7 hits.
- Closed filter. No CAN message is copied into the foreground buffer RxFG, and the RXF flag is never set.

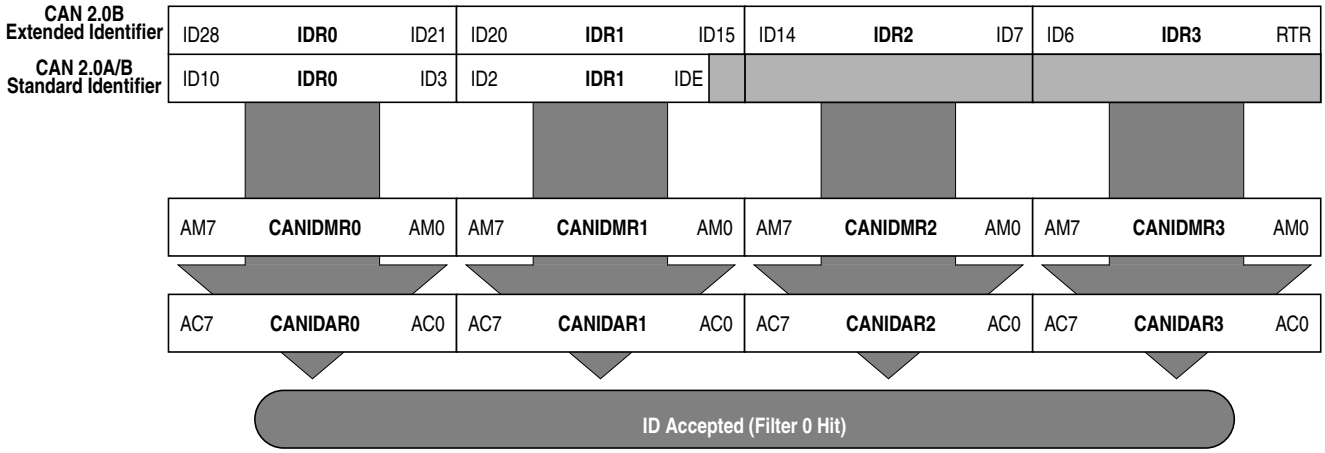

Figure 10-40. 32-bit Maskable Identifier Acceptance Filter

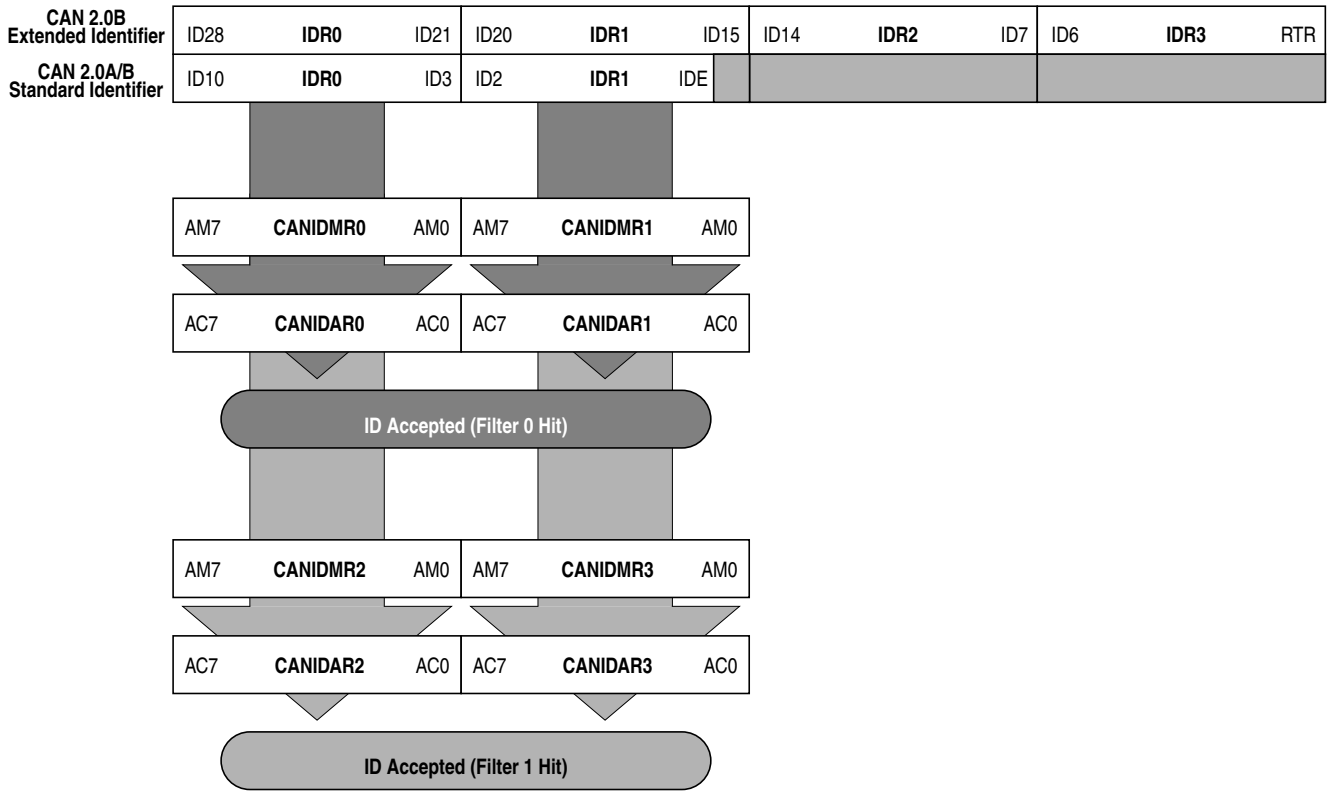

Figure 10-41. 16-bit Maskable Identifier Acceptance Filters

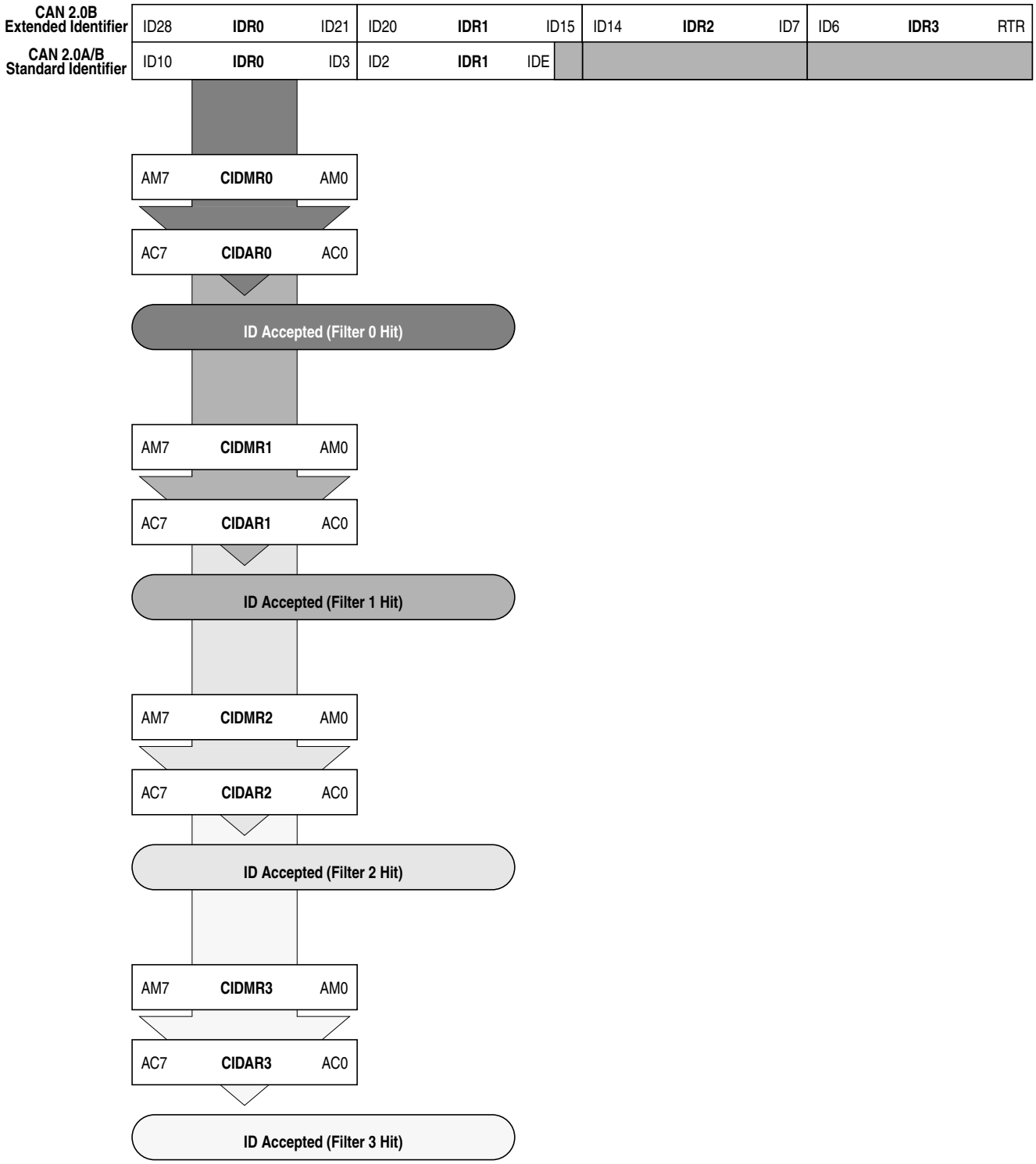

Figure 10-42. 8-bit Maskable Identifier Acceptance Filters

10.4.3.1 Protocol Violation Protection

The MSCAN protects the user from accidentally violating the CAN protocol through programming errors. The protection logic implements the following features:

- The receive and transmit error counters cannot be written or otherwise manipulated.
- All registers which control the configuration of the MSCAN cannot be modified while the MSCAN is on-line. The MSCAN has to be in Initialization Mode. The corresponding INITRQ/INITAK handshake bits in the CANCTL0/CANCTL1 registers (see Section 10.3.2.1, "MSCAN Control Register 0 (CANCTL0)") serve as a lock to protect the following registers:
  - MSCAN control 1 register (CANCTL1)
  - MSCAN bus timing registers 0 and 1 (CANBTR0, CANBTR1)
  - MSCAN identifier acceptance control register (CANIDAC)
  - MSCAN identifier acceptance registers (CANIDAR0–CANIDAR7)
  - MSCAN identifier mask registers (CANIDMR0–CANIDMR7)
- The TXCAN pin is immediately forced to a recessive state when the MSCAN goes into the power down mode or initialization mode (see Section 10.4.5.6, "MSCAN Power Down Mode," and Section 10.4.5.5, "MSCAN Initialization Mode").
- The MSCAN enable bit (CANE) is writable only once in normal system operation modes, which provides further protection against inadvertently disabling the MSCAN.

10.4.3.2 Clock System

Figure 10-43 shows the structure of the MSCAN clock generation circuitry.

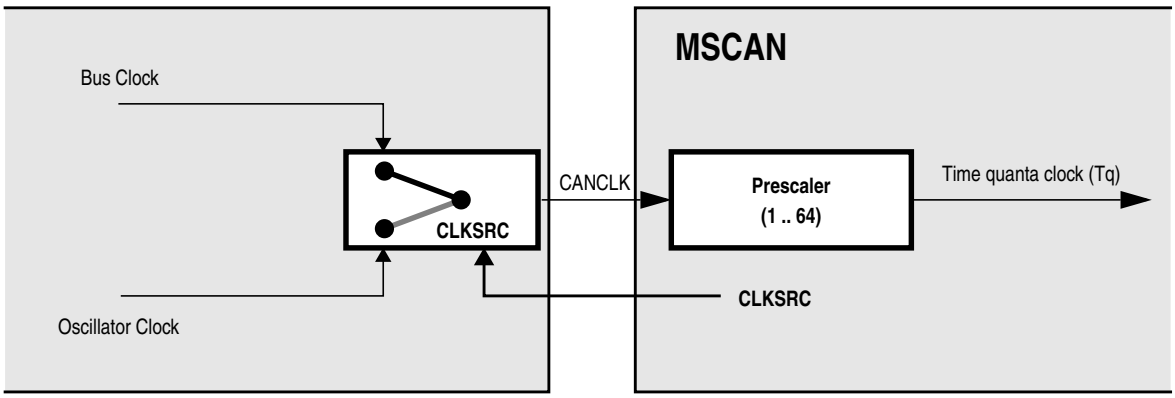

Figure 10-43. MSCAN Clocking Scheme

The clock source bit (CLKSRC) in the CANCTL1 register (10.3.2.2/10-426) defines whether the internal CANCLK is connected to the output of a crystal oscillator (oscillator clock) or to the bus clock.

The clock source has to be chosen such that the tight oscillator tolerance requirements (up to 0.4%) of the CAN protocol are met. Additionally, for high CAN bus rates (1 Mbps), a 45% to 55% duty cycle of the clock is required.

If the bus clock is generated from a PLL, it is recommended to select the oscillator clock rather than the bus clock due to jitter considerations, especially at the faster CAN bus rates.

For microcontrollers without a clock and reset generator (CRG), CANCLK is driven from the crystal oscillator (oscillator clock).

A programmable prescaler generates the time quanta (Tq) clock from CANCLK. A time quantum is the atomic unit of time handled by the MSCAN.

Eqn. 10-2

$$Tq = \frac{f_{CANCLK}}{(\text{Prescaler value})}$$

A bit time is subdivided into three segments as described in the Bosch CAN specification. (see Figure 10-44):

- SYNC_SEG: This segment has a fixed length of one time quantum. Signal edges are expected to happen within this section.
- Time Segment 1: This segment includes the PROP_SEG and the PHASE_SEG1 of the CAN standard. It can be programmed by setting the parameter TSEG1 to consist of 4 to 16 time quanta.
- Time Segment 2: This segment represents the PHASE_SEG2 of the CAN standard. It can be programmed by setting the TSEG2 parameter to be 2 to 8 time quanta long.

Eqn. 10-3

$$\text{Bit Rate} = \frac{f_{Tq}}{(\text{number of Time Quanta})}$$

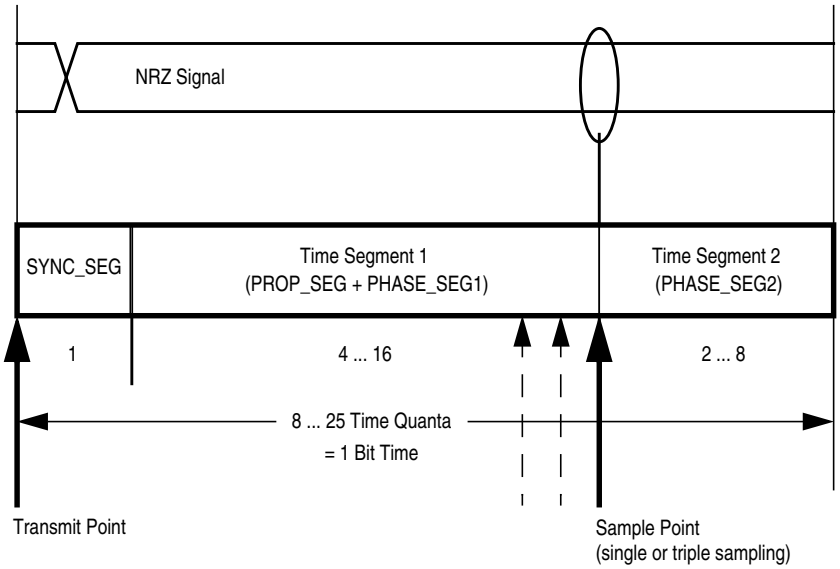

Figure 10-44. Segments within the Bit Time

Table 10-34. Time Segment Syntax

Syntax	Description
SYNC_SEG	System expects transitions to occur on the CAN bus during this period.
Transmit Point	A node in transmit mode transfers a new value to the CAN bus at this point.
Sample Point	A node in receive mode samples the CAN bus at this point. If the three samples per bit option is selected, then this point marks the position of the third sample.

The synchronization jump width (see the Bosch CAN specification for details) can be programmed in a range of 1 to 4 time quanta by setting the SJW parameter.

The SYNC_SEG, TSEG1, TSEG2, and SJW parameters are set by programming the MSCAN bus timing registers (CANBTR0, CANBTR1) (see Section 10.3.2.3, "MSCAN Bus Timing Register 0 (CANBTR0)" and Section 10.3.2.4, "MSCAN Bus Timing Register 1 (CANBTR1)").

Table 10-35 gives an overview of the CAN compliant segment settings and the related parameter values.

NOTE

It is the user's responsibility to ensure the bit time settings are in compliance with the CAN standard.

Table 10-35. CAN Standard Compliant Bit Time Segment Settings

Time Segment 1	TSEG1	Time Segment 2	TSEG2	Synchronization Jump Width	SJW
5 .. 10	4 .. 9	2	1	1 .. 2	0 .. 1
4 .. 11	3 .. 10	3	2	1 .. 3	0 .. 2
5 .. 12	4 .. 11	4	3	1 .. 4	0 .. 3
6 .. 13	5 .. 12	5	4	1 .. 4	0 .. 3
7 .. 14	6 .. 13	6	5	1 .. 4	0 .. 3
8 .. 15	7 .. 14	7	6	1 .. 4	0 .. 3
9 .. 16	8 .. 15	8	7	1 .. 4	0 .. 3

10.4.4 Modes of Operation

10.4.4.1 Normal Modes

The MSCAN module behaves as described within this specification in all normal system operation modes.

10.4.4.2 Special Modes

The MSCAN module behaves as described within this specification in all special system operation modes.

10.4.4.3 Emulation Modes

In all emulation modes, the MSCAN module behaves just like normal system operation modes as described within this specification.

10.4.4.4 Listen-Only Mode

In an optional CAN bus monitoring mode (listen-only), the CAN node is able to receive valid data frames and valid remote frames, but it sends only "recessive" bits on the CAN bus. In addition, it cannot start a transmision. If the MAC sub-layer is required to send a "dominant" bit (ACK bit, overload flag, or active error flag), the bit is rerouted internally so that the MAC sub-layer monitors this "dominant" bit, although the CAN bus may remain in recessive state externally.

10.4.4.5 Security Modes

The MSCAN module has no security features.

10.4.5 Low-Power Options

If the MSCAN is disabled (CANE = 0), the MSCAN clocks are stopped for power saving.

If the MSCAN is enabled (CANE = 1), the MSCAN has two additional modes with reduced power consumption, compared to normal mode: sleep and power down mode. In sleep mode, power consumption is reduced by stopping all clocks except those to access the registers from the CPU side. In power down mode, all clocks are stopped and no power is consumed.

Table 10-36 summarizes the combinations of MSCAN and CPU modes. A particular combination of modes is entered by the given settings on the CSWAI and SLPRQ/SLPAK bits.

For all modes, an MSCAN wake-up interrupt can occur only if the MSCAN is in sleep mode (SLPRQ = 1 and SLPAK = 1), wake-up functionality is enabled (WUPE = 1), and the wake-up interrupt is enabled (WUPIE = 1).

Table 10-36. CPU vs. MSCAN Operating Modes

CPU Mode	MSCAN Mode			
	Normal	Reduced Power Consumption		
		Sleep	Power Down	Disabled (CANE=0)
RUN	CSWAI = X[1] SLPRQ = 0 SLPAK = 0	CSWAI = X SLPRQ = 1 SLPAK = 1		CSWAI = X SLPRQ = X SLPAK = X
WAIT	CSWAI = 0 SLPRQ = 0 SLPAK = 0	CSWAI = 0 SLPRQ = 1 SLPAK = 1	CSWAI = 1 SLPRQ = X SLPAK = X	CSWAI = X SLPRQ = X SLPAK = X
STOP			CSWAI = X SLPRQ = X SLPAK = X	CSWAI = X SLPRQ = X SLPAK = X

[1] 'X' means don't care.

10.4.5.1 Operation in Run Mode

As shown in Table 10-36, only MSCAN sleep mode is available as low power option when the CPU is in run mode.

10.4.5.2 Operation in Wait Mode

The WAI instruction puts the MCU in a low power consumption stand-by mode. If the CSWAI bit is set, additional power can be saved in power down mode because the CPU clocks are stopped. After leaving this power down mode, the MSCAN restarts its internal controllers and enters normal mode again.

While the CPU is in wait mode, the MSCAN can be operated in normal mode and generate interrupts (registers can be accessed via background debug mode). The MSCAN can also operate in any of the low-power modes depending on the values of the SLPRQ/SLPAK and CSWAI bits as seen in Table 10-36.

10.4.5.3 Operation in Stop Mode

The STOP instruction puts the MCU in a low power consumption stand-by mode. In stop mode, the MSCAN is set in power down mode regardless of the value of the SLPRQ/SLPAK and CSWAI bits (Table 10-36).

10.4.5.4 MSCAN Sleep Mode

The CPU can request the MSCAN to enter this low power mode by asserting the SLPRQ bit in the CANCTL0 register. The time when the MSCAN enters sleep mode depends on a fixed synchronization delay and its current activity:

- If there are one or more message buffers scheduled for transmission (TXEx = 0), the MSCAN will continue to transmit until all transmit message buffers are empty (TXEx = 1, transmitted successfully or aborted) and then goes into sleep mode.
- If the MSCAN is receiving, it continues to receive and goes into sleep mode as soon as the CAN bus next becomes idle.
- If the MSCAN is neither transmitting nor receiving, it immediately goes into sleep mode.

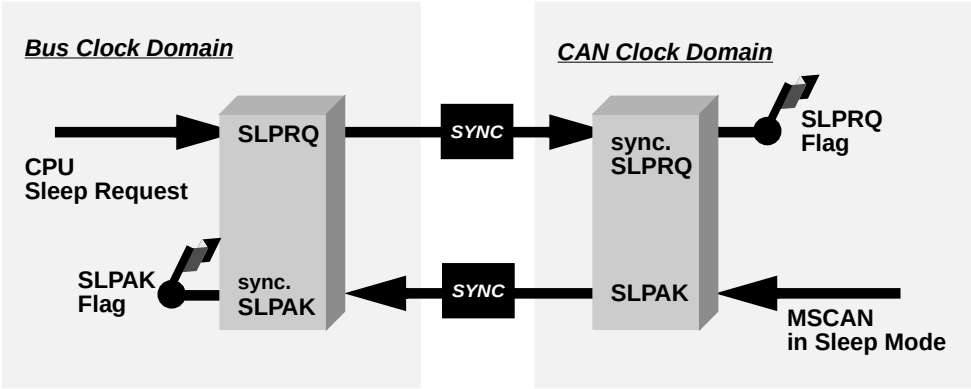

Figure 10-45. Sleep Request / Acknowledge Cycle

NOTE

The application software must avoid setting up a transmission (by clearing one or more TXEx flag(s)) and immediately request sleep mode (by setting SLPRQ). Whether the MSCAN starts transmitting or goes into sleep mode directly depends on the exact sequence of operations.

If sleep mode is active, the SLPRQ and SLPAK bits are set (Figure 10-45). The application software must use SLPAK as a handshake indication for the request (SLPRQ) to go into sleep mode.

When in sleep mode (SLPRQ = 1 and SLPAK = 1), the MSCAN stops its internal clocks. However, clocks that allow register accesses from the CPU side continue to run.

If the MSCAN is in bus-off state, it stops counting the 128 occurrences of 11 consecutive recessive bits due to the stopped clocks. The TXCAN pin remains in a recessive state. If RXF = 1, the message can be read and RXF can be cleared. Shifting a new message into the foreground buffer of the receiver FIFO (RxFG) does not take place while in sleep mode.

It is possible to access the transmit buffers and to clear the associated TXE flags. No message abort takes place while in sleep mode.

If the WUPE bit in CANCTL0 is not asserted, the MSCAN will mask any activity it detects on CAN. The RXCAN pin is therefore held internally in a recessive state. This locks the MSCAN in sleep mode (Figure 10-46). WUPE must be set before entering sleep mode to take effect.

The MSCAN is able to leave sleep mode (wake up) only when:

- CAN bus activity occurs and WUPE = 1

or

- the CPU clears the SLPRQ bit

NOTE

The CPU cannot clear the SLPRQ bit before sleep mode (SLPRQ = 1 and SLPAK = 1) is active.

After wake-up, the MSCAN waits for 11 consecutive recessive bits to synchronize to the CAN bus. As a consequence, if the MSCAN is woken-up by a CAN frame, this frame is not received.

The receive message buffers (RxFG and RxBG) contain messages if they were received before sleep mode was entered. All pending actions will be executed upon wake-up; copying of RxBG into RxFG, message aborts and message transmissions. If the MSCAN remains in bus-off state after sleep mode was exited, it continues counting the 128 occurrences of 11 consecutive recessive bits.

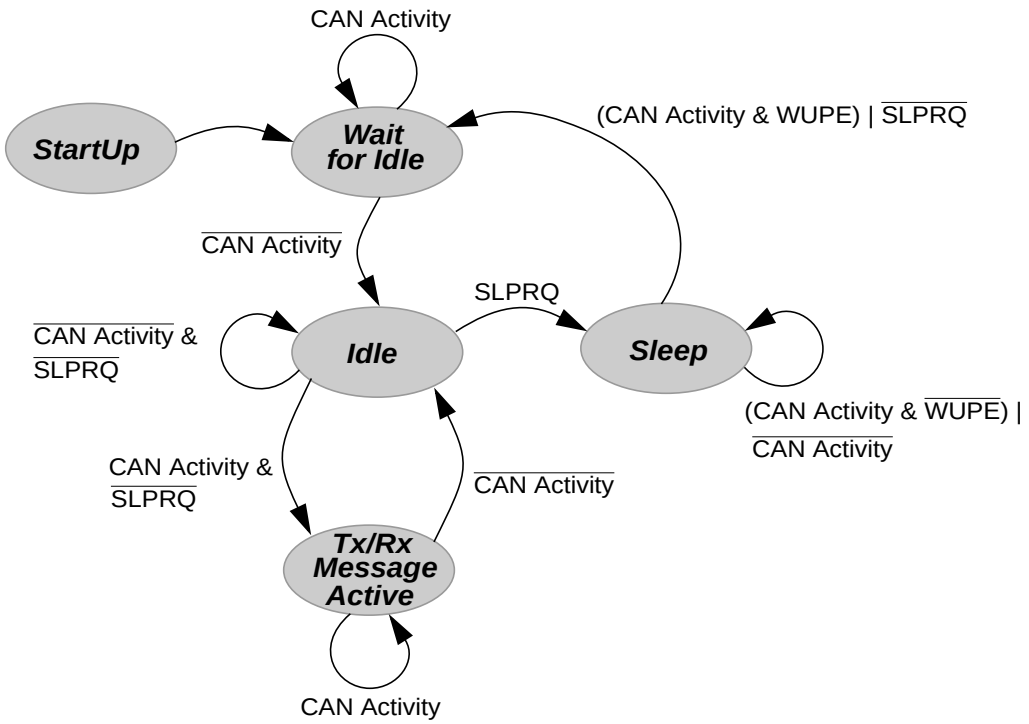

Figure 10-46. Simplified State Transitions for Entering/Leaving Sleep Mode

10.4.5.5 MSCAN Initialization Mode

In initialization mode, any on-going transmission or reception is immediately aborted and synchronization to the CAN bus is lost, potentially causing CAN protocol violations. To protect the CAN bus system from fatal consequences of violations, the MSCAN immediately drives the TXCAN pin into a recessive state.

NOTE

The user is responsible for ensuring that the MSCAN is not active when initialization mode is entered. The recommended procedure is to bring the MSCAN into sleep mode (SLPRQ = 1 and SLPAK = 1) before setting the INITRQ bit in the CANCTL0 register. Otherwise, the abort of an on-going message can cause an error condition and can impact other CAN bus devices.

In initialization mode, the MSCAN is stopped. However, interface registers remain accessible. This mode is used to reset the CANCTL0, CANRFLG, CANRIER, CANTFLG, CANTIER, CANTARQ, CANTAAK, and CANTBSEL registers to their default values. In addition, the MSCAN enables the configuration of the CANBTR0, CANBTR1 bit timing registers; CANIDAC; and the CANIDAR, CANIDMR message filters. See Section 10.3.2.1, "MSCAN Control Register 0 (CANCTL0)," for a detailed description of the initialization mode.

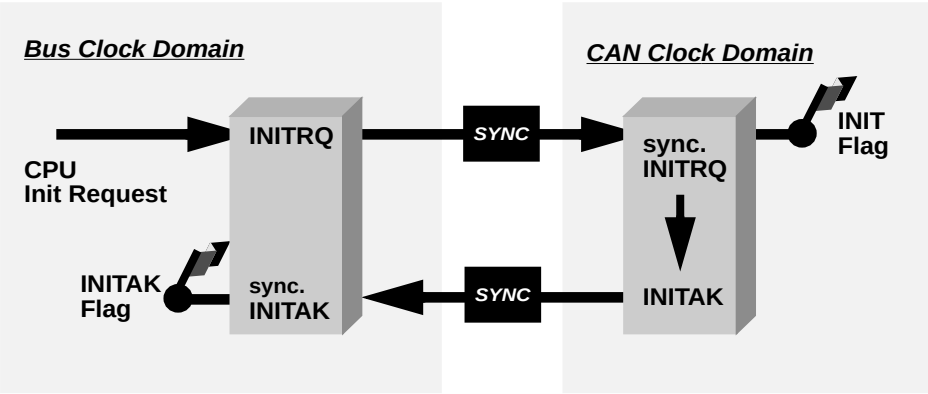

Figure 10-47. Initialization Request/Acknowledge Cycle

Due to independent clock domains within the MSCAN, INITRQ must be synchronized to all domains by using a special handshake mechanism. This handshake causes additional synchronization delay (see Section Figure 10-47., "Initialization Request/Acknowledge Cycle").

If there is no message transfer ongoing on the CAN bus, the minimum delay will be two additional bus clocks and three additional CAN clocks. When all parts of the MSCAN are in initialization mode, the INITAK flag is set. The application software must use INITAK as a handshake indication for the request (INITRQ) to go into initialization mode.

NOTE

The CPU cannot clear INITRQ before initialization mode (INITRQ = 1 and INITAK = 1) is active.

10.4.5.6 MSCAN Power Down Mode

The MSCAN is in power down mode (Table 10-36) when

- CPU is in stop mode

or

- CPU is in wait mode and the CSWAI bit is set

When entering the power down mode, the MSCAN immediately stops all ongoing transmissions and receptions, potentially causing CAN protocol violations. To protect the CAN bus system from fatal consequences of violations to the above rule, the MSCAN immediately drives the TXCAN pin into a recessive state.

NOTE

The user is responsible for ensuring that the MSCAN is not active when power down mode is entered. The recommended procedure is to bring the MSCAN into Sleep mode before the STOP or WAI instruction (if CSWAI is set) is executed. Otherwise, the abort of an ongoing message can cause an error condition and impact other CAN bus devices.

In power down mode, all clocks are stopped and no registers can be accessed. If the MSCAN was not in sleep mode before power down mode became active, the module performs an internal recovery cycle after powering up. This causes some fixed delay before the module enters normal mode again.

10.4.5.7 Programmable Wake-Up Function

The MSCAN can be programmed to wake up the MSCAN as soon as CAN bus activity is detected (see control bit WUPE in Section 10.3.2.1, "MSCAN Control Register 0 (CANCTL0)"). The sensitivity to existing CAN bus action can be modified by applying a low-pass filter function to the RXCAN input line while in sleep mode (see control bit WUPM in Section 10.3.2.2, "MSCAN Control Register 1 (CANCTL1)").

This feature can be used to protect the MSCAN from wake-up due to short glitches on the CAN bus lines. Such glitches can result from—for example—electromagnetic interference within noisy environments.

10.4.6 Reset Initialization

The reset state of each individual bit is listed in Section 10.3.2, "Register Descriptions," which details all the registers and their bit-fields.

10.4.7 Interrupts

This section describes all interrupts originated by the MSCAN. It documents the enable bits and generated flags. Each interrupt is listed and described separately.

10.4.7.1 Description of Interrupt Operation

The MSCAN supports four interrupt vectors (see Table 10-37), any of which can be individually masked (for details see sections from Section 10.3.2.6, "MSCAN Receiver Interrupt Enable Register (CANRIER)," to Section 10.3.2.8, "MSCAN Transmitter Interrupt Enable Register (CANTIER)").

NOTE

The dedicated interrupt vector addresses are defined in the Resets and Interrupts chapter.

Table 10-37. Interrupt Vectors

Interrupt Source	CCR Mask	Local Enable
Wake-Up Interrupt (WUPIF)	I bit	CANRIER (WUPIE)
Error Interrupts Interrupt (CSCIF, OVRIF)	I bit	CANRIER (CSCIE, OVRIE)
Receive Interrupt (RXF)	I bit	CANRIER (RXFIE)
Transmit Interrupts (TXE[2:0])	I bit	CANTIER (TXEIE[2:0])

10.4.7.2 Transmit Interrupt

At least one of the three transmit buffers is empty (not scheduled) and can be loaded to schedule a message for transmission. The TXEx flag of the empty message buffer is set.

10.4.7.3 Receive Interrupt

A message is successfully received and shifted into the foreground buffer (RxFG) of the receiver FIFO. This interrupt is generated immediately after receiving the EOF symbol. The RXF flag is set. If there are multiple messages in the receiver FIFO, the RXF flag is set as soon as the next message is shifted to the foreground buffer.

10.4.7.4 Wake-Up Interrupt

A wake-up interrupt is generated if activity on the CAN bus occurs during MSCAN internal sleep mode. WUPE (see Section 10.3.2.1, "MSCAN Control Register 0 (CANCTL0)") must be enabled.

10.4.7.5 Error Interrupt

An error interrupt is generated if an overrun of the receiver FIFO, error, warning, or bus-off condition occurrs. Section 10.3.2.5, "MSCAN Receiver Flag Register (CANRFLG) indicates one of the following conditions:

- **Overrun** — An overrun condition of the receiver FIFO as described in Section 10.4.2.3, "Receive Structures," occurred.
- **CAN Status Change** — The actual value of the transmit and receive error counters control the CAN bus state of the MSCAN. As soon as the error counters skip into a critical range (Tx/Rx-warning, Tx/Rx-error, bus-off) the MSCAN flags an error condition. The status change, which caused the error condition, is indicated by the TSTAT and RSTAT flags (see Section 10.3.2.5, "MSCAN Receiver Flag Register (CANRFLG)" and Section 10.3.2.6, "MSCAN Receiver Interrupt Enable Register (CANRIER)").

10.4.7.6 Interrupt Acknowledge

Interrupts are directly associated with one or more status flags in either the Section 10.3.2.5, "MSCAN Receiver Flag Register (CANRFLG)" or the Section 10.3.2.7, "MSCAN Transmitter Flag Register

(CANTFLG)." Interrupts are pending as long as one of the corresponding flags is set. The flags in CANRFLG and CANTFLG must be reset within the interrupt handler to handshake the interrupt. The flags are reset by writing a 1 to the corresponding bit position. A flag cannot be cleared if the respective condition prevails.

NOTE

It must be guaranteed that the CPU clears only the bit causing the current interrupt. For this reason, bit manipulation instructions (BSET) must not be used to clear interrupt flags. These instructions may cause accidental clearing of interrupt flags which are set after entering the current interrupt service routine.

10.4.7.7 Recovery from Stop or Wait

The MSCAN can recover from stop or wait via the wake-up interrupt. This interrupt can only occur if the MSCAN was in sleep mode (SLPRQ = 1 and SLPAK = 1) before entering power down mode, the wake-up option is enabled (WUPE = 1), and the wake-up interrupt is enabled (WUPIE = 1).

10.5 Initialization/Application Information

10.5.1 MSCAN initialization

The procedure to initially start up the MSCAN module out of reset is as follows:

1. Assert CANE
2. Write to the configuration registers in initialization mode
3. Clear INITRQ to leave initialization mode and enter normal mode

If the configuration of registers which are writable in initialization mode needs to be changed only when the MSCAN module is in normal mode:

1. Bring the module into sleep mode by setting SLPRQ and awaiting SLPAK to assert after the CAN bus becomes idle.
2. Enter initialization mode: assert INITRQ and await INITAK
3. Write to the configuration registers in initialization mode
4. Clear INITRQ to leave initialization mode and continue in normal mode

10.5.2 Bus-Off Recovery

The bus-off recovery is user configurable. The bus-off state can either be left automatically or on user request.

For reasons of backwards compatibility, the MSCAN defaults to automatic recovery after reset. In this case, the MSCAN will become error active again after counting 128 occurrences of 11 consecutive recessive bits on the CAN bus (See the Bosch CAN specification for details).

If the MSCAN is configured for user request (BORM set in Section 10.3.2.2, "MSCAN Control Register 1 (CANCTL1)"), the recovery from bus-off starts after both independent events have become true:

- 128 occurrences of 11 consecutive recessive bits on the CAN bus have been monitored
- BOHOLD in Section 10.3.2.14, "MSCAN Miscellaneous Register (CANMISC) has been cleared by the user

These two events may occur in any order.

Chapter 11
Serial Communication Interface (S12SCIV5)

11.1 Introduction

This block guide provides an overview of the serial communication interface (SCI) module.

The SCI allows asynchronous serial communications with peripheral devices and other CPUs.

11.1.1 Glossary

IR: InfraRed

IrDA: Infrared Design Associate

IRQ: Interrupt Request

LIN: Local Interconnect Network

LSB: Least Significant Bit

MSB: Most Significant Bit

NRZ: Non-Return-to-Zero

RZI: Return-to-Zero-Inverted

RXD: Receive Pin

SCI : Serial Communication Interface

TXD: Transmit Pin

11.1.2 Features

The SCI includes these distinctive features:

- Full-duplex or single-wire operation
- Standard mark/space non-return-to-zero (NRZ) format
- Selectable IrDA 1.4 return-to-zero-inverted (RZI) format with programmable pulse widths
- 13-bit baud rate selection
- Programmable 8-bit or 9-bit data format
- Separately enabled transmitter and receiver
- Programmable polarity for transmitter and receiver

- Programmable transmitter output parity
- Two receiver wakeup methods:
  - Idle line wakeup
  - Address mark wakeup
- Interrupt-driven operation with eight flags:
  - Transmitter empty
  - Transmission complete
  - Receiver full
  - Idle receiver input
  - Receiver overrun
  - Noise error
  - Framing error
  - Parity error
  - Receive wakeup on active edge
  - Transmit collision detect supporting LIN
  - Break Detect supporting LIN
- Receiver framing error detection
- Hardware parity checking
- 1/16 bit-time noise detection

11.1.3 Modes of Operation

The SCI functions the same in normal, special, and emulation modes. It has two low power modes, wait and stop modes.

- Run mode
- Wait mode
- Stop mode

11.1.4 Block Diagram

Figure 11-1 is a high level block diagram of the SCI module, showing the interaction of various function blocks.

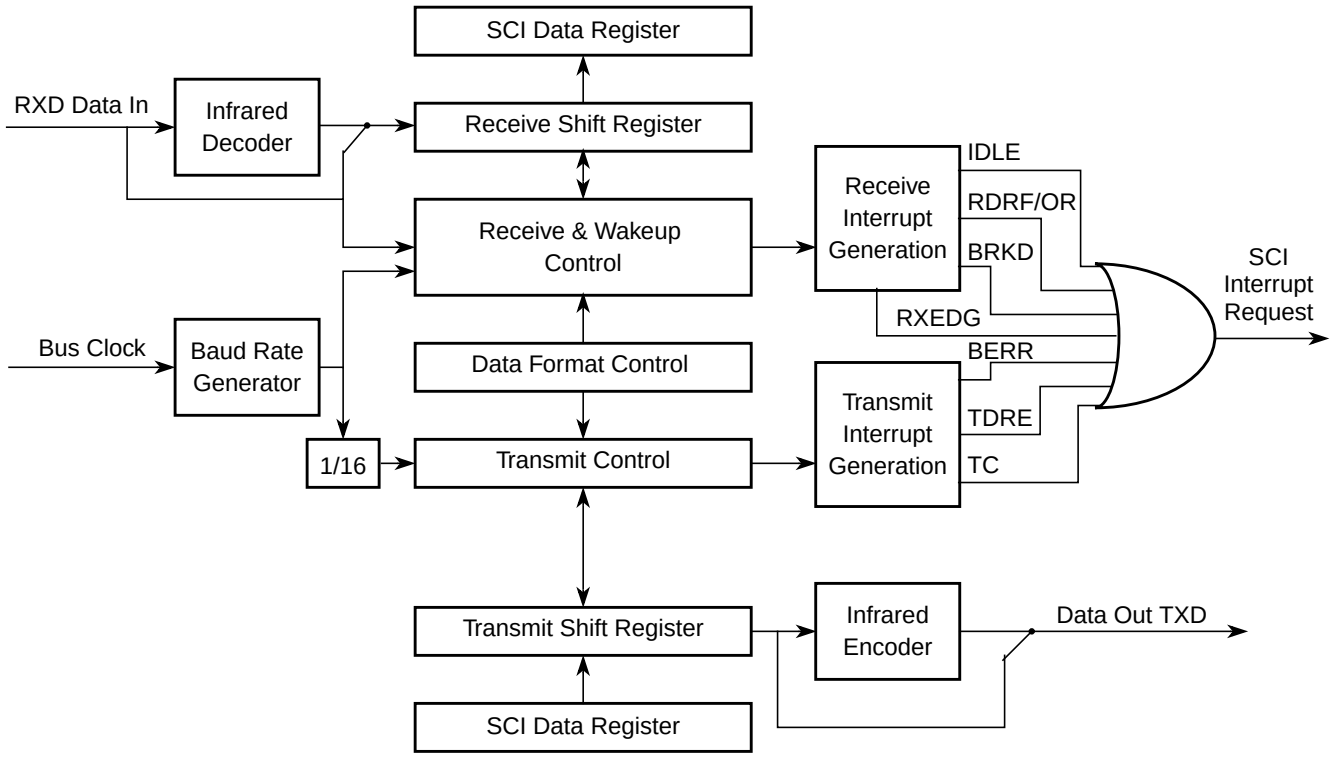

Figure 11-1. SCI Block Diagram

11.2 External Signal Description

The SCI module has a total of two external pins.

11.2.1 TXD — Transmit Pin

The TXD pin transmits SCI (standard or infrared) data. It will idle high in either mode and is high impedance anytime the transmitter is disabled.

11.2.2 RXD — Receive Pin

The RXD pin receives SCI (standard or infrared) data. An idle line is detected as a line high. This input is ignored when the receiver is disabled and should be terminated to a known voltage.

11.3 Memory Map and Register Definition

This section provides a detailed description of all the SCI registers.

11.3.1 Module Memory Map and Register Definition

The memory map for the SCI module is given below in Figure 11-2. The address listed for each register is the address offset. The total address for each register is the sum of the base address for the SCI module and the address offset for each register.

11.3.2 Register Descriptions

This section consists of register descriptions in address order. Each description includes a standard register diagram with an associated figure number. Writes to a reserved register locations do not have any effect and reads of these locations return a zero. Details of register bit and field function follow the register diagrams, in bit order.

Register Name		Bit 7	6	5	4	3	2	1	Bit 0
SCIBDH[1]	R/W	IREN	TNP1	TNP0	SBR12	SBR11	SBR10	SBR9	SBR8
SCIBDL[1]	R/W	SBR7	SBR6	SBR5	SBR4	SBR3	SBR2	SBR1	SBR0
SCICR1[1]	R/W	LOOPS	SCISWAI	RSRC	M	WAKE	ILT	PE	PT
SCIASR1[2]	R	RXEDGIF	0	0	0	0	BERRV	BERRIF	BKDIF
	W								
SCIACR1[2]	R	RXEDGIE	0	0	0	0	0	BERRIE	BKDIE
	W								
SCIACR2[2]	R	0	0	0	0	0	BERRM1	BERRM0	BKDFE
	W								
SCICR2	R/W	TIE	TCIE	RIE	ILIE	TE	RE	RWU	SBK
SCISR1	R	TDRE	TC	RDRF	IDLE	OR	NF	FE	PF
	W								
SCISR2	R	AMAP	0	0	TXPOL	RXPOL	BRK13	TXDIR	RAF
	W								
SCIDRH	R	R8	T8	0	0	0	0	0	0
	W								
SCIDRL	R	R7	R6	R5	R4	R3	R2	R1	R0
	W	T7	T6	T5	T4	T3	T2	T1	T0

1.These registers are accessible if the AMAP bit in the SCISR2 register is set to zero.
2,These registers are accessible if the AMAP bit in the SCISR2 register is set to one.

= Unimplemented or Reserved

Figure 11-2. SCI Register Summary

[1] Those registers are accessible if the AMAP bit in the SCISR2 register is set to zero
[2] Those registers are accessible if the AMAP bit in the SCISR2 register is set to one

11.3.2.1 SCI Baud Rate Registers (SCIBDH, SCIBDL)

	7	6	5	4	3	2	1	0
R/W	IREN	TNP1	TNP0	SBR12	SBR11	SBR10	SBR9	SBR8
Reset	0	0	0	0	0	0	0	0

Figure 11-3. SCI Baud Rate Register (SCIBDH)

	7	6	5	4	3	2	1	0
R/W	SBR7	SBR6	SBR5	SBR4	SBR3	SBR2	SBR1	SBR0
Reset	0	0	0	0	0	0	0	0

Figure 11-4. SCI Baud Rate Register (SCIBDL)

Read: Anytime, if AMAP = 0. If only SCIBDH is written to, a read will not return the correct data until SCIBDL is written to as well, following a write to SCIBDH.

Write: Anytime, if AMAP = 0.

NOTE

Those two registers are only visible in the memory map if AMAP = 0 (reset condition).

The SCI baud rate register is used by to determine the baud rate of the SCI, and to control the infrared modulation/demodulation submodule.

Table 11-1. SCIBDH and SCIBDL Field Descriptions

Field	Description
7 IREN	**Infrared Enable Bit** — This bit enables/disables the infrared modulation/demodulation submodule. 0 IR disabled 1 IR enabled
6:5 TNP[1:0]	**Transmitter Narrow Pulse Bits** — These bits enable whether the SCI transmits a 1/16, 3/16, 1/32 or 1/4 narrow pulse. See Table 11-2.
4:0 7:0 SBR[12:0]	**SCI Baud Rate Bits** — The baud rate for the SCI is determined by the bits in this register. The baud rate is calculated two different ways depending on the state of the IREN bit. The formulas for calculating the baud rate are: When IREN = 0 then, SCI baud rate = SCI bus clock / (16 x SBR[12:0]) When IREN = 1 then, SCI baud rate = SCI bus clock / (32 x SBR[12:1]) **Note:** The baud rate generator is disabled after reset and not started until the TE bit or the RE bit is set for the first time. The baud rate generator is disabled when (SBR[12:0] = 0 and IREN = 0) or (SBR[12:1] = 0 and IREN = 1). **Note:** Writing to SCIBDH has no effect without writing to SCIBDL, because writing to SCIBDH puts the data in a temporary location until SCIBDL is written to.

Table 11-2. IRSCI Transmit Pulse Width

TNP[1:0]	Narrow Pulse Width
11	1/4
10	1/32
01	1/16
00	3/16

11.3.2.2 SCI Control Register 1 (SCICR1)

	7	6	5	4	3	2	1	0
R W	LOOPS	SCISWAI	RSRC	M	WAKE	ILT	PE	PT
Reset	0	0	0	0	0	0	0	0

Figure 11-5. SCI Control Register 1 (SCICR1)

Read: Anytime, if AMAP = 0.

Write: Anytime, if AMAP = 0.

NOTE

This register is only visible in the memory map if AMAP = 0 (reset condition).

Table 11-3. SCICR1 Field Descriptions

Field	Description
7 LOOPS	**Loop Select Bit** — LOOPS enables loop operation. In loop operation, the RXD pin is disconnected from the SCI and the transmitter output is internally connected to the receiver input. Both the transmitter and the receiver must be enabled to use the loop function. 0 Normal operation enabled 1 Loop operation enabled The receiver input is determined by the RSRC bit.
6 SCISWAI	**SCI Stop in Wait Mode Bit** — SCISWAI disables the SCI in wait mode. 0 SCI enabled in wait mode 1 SCI disabled in wait mode
5 RSRC	**Receiver Source Bit** — When LOOPS = 1, the RSRC bit determines the source for the receiver shift register input. See Table 11-4. 0 Receiver input internally connected to transmitter output 1 Receiver input connected externally to transmitter
4 M	**Data Format Mode Bit** — MODE determines whether data characters are eight or nine bits long. 0 One start bit, eight data bits, one stop bit 1 One start bit, nine data bits, one stop bit
3 WAKE	**Wakeup Condition Bit** — WAKE determines which condition wakes up the SCI: a logic 1 (address mark) in the most significant bit position of a received data character or an idle condition on the RXD pin. 0 Idle line wakeup 1 Address mark wakeup

Table 11-3. SCICR1 Field Descriptions (continued)

Field	Description
2 ILT	**Idle Line Type Bit** — ILT determines when the receiver starts counting logic 1s as idle character bits. The counting begins either after the start bit or after the stop bit. If the count begins after the start bit, then a string of logic 1s preceding the stop bit may cause false recognition of an idle character. Beginning the count after the stop bit avoids false idle character recognition, but requires properly synchronized transmissions. 0 Idle character bit count begins after start bit 1 Idle character bit count begins after stop bit
1 PE	**Parity Enable Bit** — PE enables the parity function. When enabled, the parity function inserts a parity bit in the most significant bit position. 0 Parity function disabled 1 Parity function enabled
0 PT	**Parity Type Bit** — PT determines whether the SCI generates and checks for even parity or odd parity. With even parity, an even number of 1s clears the parity bit and an odd number of 1s sets the parity bit. With odd parity, an odd number of 1s clears the parity bit and an even number of 1s sets the parity bit. 1 Even parity 1 Odd parity

Table 11-4. Loop Functions

LOOPS	RSRC	Function
0	x	Normal operation
1	0	Loop mode with transmitter output internally connected to receiver input
1	1	Single-wire mode with TXD pin connected to receiver input

11.3.2.3 SCI Alternative Status Register 1 (SCIASR1)

	7	6	5	4	3	2	1	0
R	RXEDGIF	0	0	0	0	BERRV	BERRIF	BKDIF
W								
Reset	0	0	0	0	0	0	0	0

= Unimplemented or Reserved

Figure 11-6. SCI Alternative Status Register 1 (SCIASR1)

Read: Anytime, if AMAP = 1

Write: Anytime, if AMAP = 1

Table 11-5. SCIASR1 Field Descriptions

Field	Description
7 RXEDGIF	**Receive Input Active Edge Interrupt Flag** — RXEDGIF is asserted, if an active edge (falling if RXPOL = 0, rising if RXPOL = 1) on the RXD input occurs. RXEDGIF bit is cleared by writing a “1” to it. 0 No active receive on the receive input has occurred 1 An active edge on the receive input has occurred
2 BERRV	**Bit Error Value** — BERRV reflects the state of the RXD input when the bit error detect circuitry is enabled and a mismatch to the expected value happened. The value is only meaningful, if BERRIF = 1. 0 A low input was sampled, when a high was expected 1 A high input reassembled, when a low was expected
1 BERRIF	**Bit Error Interrupt Flag** — BERRIF is asserted, when the bit error detect circuitry is enabled and if the value sampled at the RXD input does not match the transmitted value. If the BERRIE interrupt enable bit is set an interrupt will be generated. The BERRIF bit is cleared by writing a “1” to it. 0 No mismatch detected 1 A mismatch has occurred
0 BKDIF	**Break Detect Interrupt Flag** — BKDIF is asserted, if the break detect circuitry is enabled and a break signal is received. If the BKDIE interrupt enable bit is set an interrupt will be generated. The BKDIF bit is cleared by writing a “1” to it. 0 No break signal was received 1 A break signal was received

11.3.2.4 SCI Alternative Control Register 1 (SCIACR1)

	7	6	5	4	3	2	1	0
R	RXEDGIE	0	0	0	0	0	BERRIE	BKDIE
W								
Reset	0	0	0	0	0	0	0	0

= Unimplemented or Reserved

Figure 11-7. SCI Alternative Control Register 1 (SCIACR1)

Read: Anytime, if AMAP = 1

Write: Anytime, if AMAP = 1

Table 11-6. SCIACR1 Field Descriptions

Field	Description
7 RSEDGIE	**Receive Input Active Edge Interrupt Enable** — RXEDGIE enables the receive input active edge interrupt flag, RXEDGIF, to generate interrupt requests. 0 RXEDGIF interrupt requests disabled 1 RXEDGIF interrupt requests enabled
1 BERRIE	**Bit Error Interrupt Enable** — BERRIE enables the bit error interrupt flag, BERRIF, to generate interrupt requests. 0 BERRIF interrupt requests disabled 1 BERRIF interrupt requests enabled
0 BKDIE	**Break Detect Interrupt Enable** — BKDIE enables the break detect interrupt flag, BKDIF, to generate interrupt requests. 0 BKDIF interrupt requests disabled 1 BKDIF interrupt requests enabled

11.3.2.5 SCI Alternative Control Register 2 (SCIACR2)

	7	6	5	4	3	2	1	0
R	0	0	0	0	0	BERRM1	BERRM0	BKDFE
W								
Reset	0	0	0	0	0	0	0	0

= Unimplemented or Reserved

Figure 11-8. SCI Alternative Control Register 2 (SCIACR2)

Read: Anytime, if AMAP = 1

Write: Anytime, if AMAP = 1

Table 11-7. SCIACR2 Field Descriptions

Field	Description
2:1 BERRM[1:0]	**Bit Error Mode** — Those two bits determines the functionality of the bit error detect feature. See Table 11-8.
0 BKDFE	**Break Detect Feature Enable** — BKDFE enables the break detect circuitry. 0 Break detect circuit disabled 1 Break detect circuit enabled

Table 11-8. Bit Error Mode Coding

BERRM1	BERRM0	Function
0	0	Bit error detect circuit is disabled
0	1	Receive input sampling occurs during the 9th time tick of a transmitted bit (refer to Figure 11-19)
1	0	Receive input sampling occurs during the 13th time tick of a transmitted bit (refer to Figure 11-19)
1	1	Reserved

11.3.2.6 SCI Control Register 2 (SCICR2)

	7	6	5	4	3	2	1	0
R W	TIE	TCIE	RIE	ILIE	TE	RE	RWU	SBK
Reset	0	0	0	0	0	0	0	0

Figure 11-9. SCI Control Register 2 (SCICR2)

Read: Anytime

Write: Anytime

Table 11-9. SCICR2 Field Descriptions

Field	Description
7 TIE	**Transmitter Interrupt Enable Bit** — TIE enables the transmit data register empty flag, TDRE, to generate interrupt requests. 0 TDRE interrupt requests disabled 1 TDRE interrupt requests enabled
6 TCIE	**Transmission Complete Interrupt Enable Bit** — TCIE enables the transmission complete flag, TC, to generate interrupt requests. 0 TC interrupt requests disabled 1 TC interrupt requests enabled
5 RIE	**Receiver Full Interrupt Enable Bit** — RIE enables the receive data register full flag, RDRF, or the overrun flag, OR, to generate interrupt requests. 0 RDRF and OR interrupt requests disabled 1 RDRF and OR interrupt requests enabled
4 ILIE	**Idle Line Interrupt Enable Bit** — ILIE enables the idle line flag, IDLE, to generate interrupt requests. 0 IDLE interrupt requests disabled 1 IDLE interrupt requests enabled
3 TE	**Transmitter Enable Bit** — TE enables the SCI transmitter and configures the TXD pin as being controlled by the SCI. The TE bit can be used to queue an idle preamble. 0 Transmitter disabled 1 Transmitter enabled
2 RE	**Receiver Enable Bit** — RE enables the SCI receiver. 0 Receiver disabled 1 Receiver enabled
1 RWU	**Receiver Wakeup Bit** — Standby state 0 Normal operation. 1 RWU enables the wakeup function and inhibits further receiver interrupt requests. Normally, hardware wakes the receiver by automatically clearing RWU.
0 SBK	**Send Break Bit** — Toggling SBK sends one break character (10 or 11 logic 0s, respectively 13 or 14 logics 0s if BRK13 is set). Toggling implies clearing the SBK bit before the break character has finished transmitting. As long as SBK is set, the transmitter continues to send complete break characters (10 or 11 bits, respectively 13 or 14 bits). 0 No break characters 1 Transmit break characters

11.3.2.7 SCI Status Register 1 (SCISR1)

The SCISR1 and SCISR2 registers provides inputs to the MCU for generation of SCI interrupts. Also, these registers can be polled by the MCU to check the status of these bits. The flag-clearing procedures require that the status register be read followed by a read or write to the SCI data register.It is permissible to execute other instructions between the two steps as long as it does not compromise the handling of I/O, but the order of operations is important for flag clearing.

	7	6	5	4	3	2	1	0
R	TDRE	TC	RDRF	IDLE	OR	NF	FE	PF
W								
Reset	1	1	0	0	0	0	0	0

= Unimplemented or Reserved

Figure 11-10. SCI Status Register 1 (SCISR1)

Read: Anytime

Write: Has no meaning or effect

Table 11-10. SCISR1 Field Descriptions

Field	Description
7 TDRE	**Transmit Data Register Empty Flag** — TDRE is set when the transmit shift register receives a byte from the SCI data register. When TDRE is 1, the transmit data register (SCIDRH/L) is empty and can receive a new value to transmit.Clear TDRE by reading SCI status register 1 (SCISR1), with TDRE set and then writing to SCI data register low (SCIDRL). 0 No byte transferred to transmit shift register 1 Byte transferred to transmit shift register; transmit data register empty
6 TC	**Transmit Complete Flag** — TC is set low when there is a transmission in progress or when a preamble or break character is loaded. TC is set high when the TDRE flag is set and no data, preamble, or break character is being transmitted.When TC is set, the TXD pin becomes idle (logic 1). Clear TC by reading SCI status register 1 (SCISR1) with TC set and then writing to SCI data register low (SCIDRL). TC is cleared automatically when data, preamble, or break is queued and ready to be sent. TC is cleared in the event of a simultaneous set and clear of the TC flag (transmission not complete). 0 Transmission in progress 1 No transmission in progress
5 RDRF	**Receive Data Register Full Flag** — RDRF is set when the data in the receive shift register transfers to the SCI data register. Clear RDRF by reading SCI status register 1 (SCISR1) with RDRF set and then reading SCI data register low (SCIDRL). 0 Data not available in SCI data register 1 Received data available in SCI data register
4 IDLE	**Idle Line Flag** — IDLE is set when 10 consecutive logic 1s (if M = 0) or 11 consecutive logic 1s (if M =1) appear on the receiver input. Once the IDLE flag is cleared, a valid frame must again set the RDRF flag before an idle condition can set the IDLE flag.Clear IDLE by reading SCI status register 1 (SCISR1) with IDLE set and then reading SCI data register low (SCIDRL). 0 Receiver input is either active now or has never become active since the IDLE flag was last cleared 1 Receiver input has become idle **Note:** When the receiver wakeup bit (RWU) is set, an idle line condition does not set the IDLE flag.

Table 11-10. SCISR1 Field Descriptions (continued)

Field	Description
3 OR	**Overrun Flag** — OR is set when software fails to read the SCI data register before the receive shift register receives the next frame. The OR bit is set immediately after the stop bit has been completely received for the second frame. The data in the shift register is lost, but the data already in the SCI data registers is not affected. Clear OR by reading SCI status register 1 (SCISR1) with OR set and then reading SCI data register low (SCIDRL). 0 No overrun 1 Overrun **Note:** OR flag may read back as set when RDRF flag is clear. This may happen if the following sequence of events occurs: 1. After the first frame is received, read status register SCISR1 (returns RDRF set and OR flag clear); 2. Receive second frame without reading the first frame in the data register (the second frame is not received and OR flag is set); 3. Read data register SCIDRL (returns first frame and clears RDRF flag in the status register); 4. Read status register SCISR1 (returns RDRF clear and OR set). Event 3 may be at exactly the same time as event 2 or any time after. When this happens, a dummy SCIDRL read following event 4 will be required to clear the OR flag if further frames are to be received.
2 NF	**Noise Flag** — NF is set when the SCI detects noise on the receiver input. NF bit is set during the same cycle as the RDRF flag but does not get set in the case of an overrun. Clear NF by reading SCI status register 1(SCISR1), and then reading SCI data register low (SCIDRL). 0 No noise 1 Noise
1 FE	**Framing Error Flag** — FE is set when a logic 0 is accepted as the stop bit. FE bit is set during the same cycle as the RDRF flag but does not get set in the case of an overrun. FE inhibits further data reception until it is cleared. Clear FE by reading SCI status register 1 (SCISR1) with FE set and then reading the SCI data register low (SCIDRL). 0 No framing error 1 Framing error
0 PF	**Parity Error Flag** — PF is set when the parity enable bit (PE) is set and the parity of the received data does not match the parity type bit (PT). PF bit is set during the same cycle as the RDRF flag but does not get set in the case of an overrun. Clear PF by reading SCI status register 1 (SCISR1), and then reading SCI data register low (SCIDRL). 0 No parity error 1 Parity error

11.3.2.8 SCI Status Register 2 (SCISR2)

	7	6	5	4	3	2	1	0
R	AMAP	0	0	TXPOL	RXPOL	BRK13	TXDIR	RAF
W								
Reset	0	0	0	0	0	0	0	0

= Unimplemented or Reserved

Figure 11-11. SCI Status Register 2 (SCISR2)

Read: Anytime

Write: Anytime

Table 11-11. SCISR2 Field Descriptions

Field	Description
7 AMAP	**Alternative Map** — This bit controls which registers sharing the same address space are accessible. In the reset condition the SCI behaves as previous versions. Setting AMAP=1 allows the access to another set of control and status registers and hides the baud rate and SCI control Register 1. 0 The registers labelled SCIBDH (0x0000),SCIBDL (0x0001), SCICR1 (0x0002) are accessible 1 The registers labelled SCIASR1 (0x0000),SCIACR1 (0x0001), SCIACR2 (0x00002) are accessible
4 TXPOL	**Transmit Polarity** — This bit control the polarity of the transmitted data. In NRZ format, a one is represented by a mark and a zero is represented by a space for normal polarity, and the opposite for inverted polarity. In IrDA format, a zero is represented by short high pulse in the middle of a bit time remaining idle low for a one for normal polarity, and a zero is represented by short low pulse in the middle of a bit time remaining idle high for a one for inverted polarity. 0 Normal polarity 1 Inverted polarity
3 RXPOL	**Receive Polarity** — This bit control the polarity of the received data. In NRZ format, a one is represented by a mark and a zero is represented by a space for normal polarity, and the opposite for inverted polarity. In IrDA format, a zero is represented by short high pulse in the middle of a bit time remaining idle low for a one for normal polarity, and a zero is represented by short low pulse in the middle of a bit time remaining idle high for a one for inverted polarity. 0 Normal polarity 1 Inverted polarity
2 BRK13	**Break Transmit Character Length** — This bit determines whether the transmit break character is 10 or 11 bit respectively 13 or 14 bits long. The detection of a framing error is not affected by this bit. 0 Break character is 10 or 11 bit long 1 Break character is 13 or 14 bit long
1 TXDIR	**Transmitter Pin Data Direction in Single-Wire Mode** — This bit determines whether the TXD pin is going to be used as an input or output, in the single-wire mode of operation. This bit is only relevant in the single-wire mode of operation. 0 TXD pin to be used as an input in single-wire mode 1 TXD pin to be used as an output in single-wire mode
0 RAF	**Receiver Active Flag** — RAF is set when the receiver detects a logic 0 during the RT1 time period of the start bit search. RAF is cleared when the receiver detects an idle character. 0 No reception in progress 1 Reception in progress

11.3.2.9 SCI Data Registers (SCIDRH, SCIDRL)

	7	6	5	4	3	2	1	0
R	R8	T8	0	0	0	0	0	0
W								
Reset	0	0	0	0	0	0	0	0

= Unimplemented or Reserved

Figure 11-12. SCI Data Registers (SCIDRH)

	7	6	5	4	3	2	1	0
R	R7	R6	R5	R4	R3	R2	R1	R0
W	T7	T6	T5	T4	T3	T2	T1	T0
Reset	0	0	0	0	0	0	0	0

Figure 11-13. SCI Data Registers (SCIDRL)

Read: Anytime; reading accesses SCI receive data register

Write: Anytime; writing accesses SCI transmit data register; writing to R8 has no effect

Table 11-12. SCIDRH and SCIDRL Field Descriptions

Field	Description
SCIDRH 7 R8	**Received Bit 8** — R8 is the ninth data bit received when the SCI is configured for 9-bit data format (M = 1).
SCIDRH 6 T8	**Transmit Bit 8** — T8 is the ninth data bit transmitted when the SCI is configured for 9-bit data format (M = 1).
SCIDRL 7:0 R[7:0] T[7:0]	**R7:R0** — Received bits seven through zero for 9-bit or 8-bit data formats **T7:T0** — Transmit bits seven through zero for 9-bit or 8-bit formats

NOTE

If the value of T8 is the same as in the previous transmission, T8 does not have to be rewritten.The same value is transmitted until T8 is rewritten

In 8-bit data format, only SCI data register low (SCIDRL) needs to be accessed.

When transmitting in 9-bit data format and using 8-bit write instructions, write first to SCI data register high (SCIDRH), then SCIDRL.

11.4 Functional Description

This section provides a complete functional description of the SCI block, detailing the operation of the design from the end user perspective in a number of subsections.

Figure 11-14 shows the structure of the SCI module. The SCI allows full duplex, asynchronous, serial communication between the CPU and remote devices, including other CPUs. The SCI transmitter and receiver operate independently, although they use the same baud rate generator. The CPU monitors the status of the SCI, writes the data to be transmitted, and processes received data.

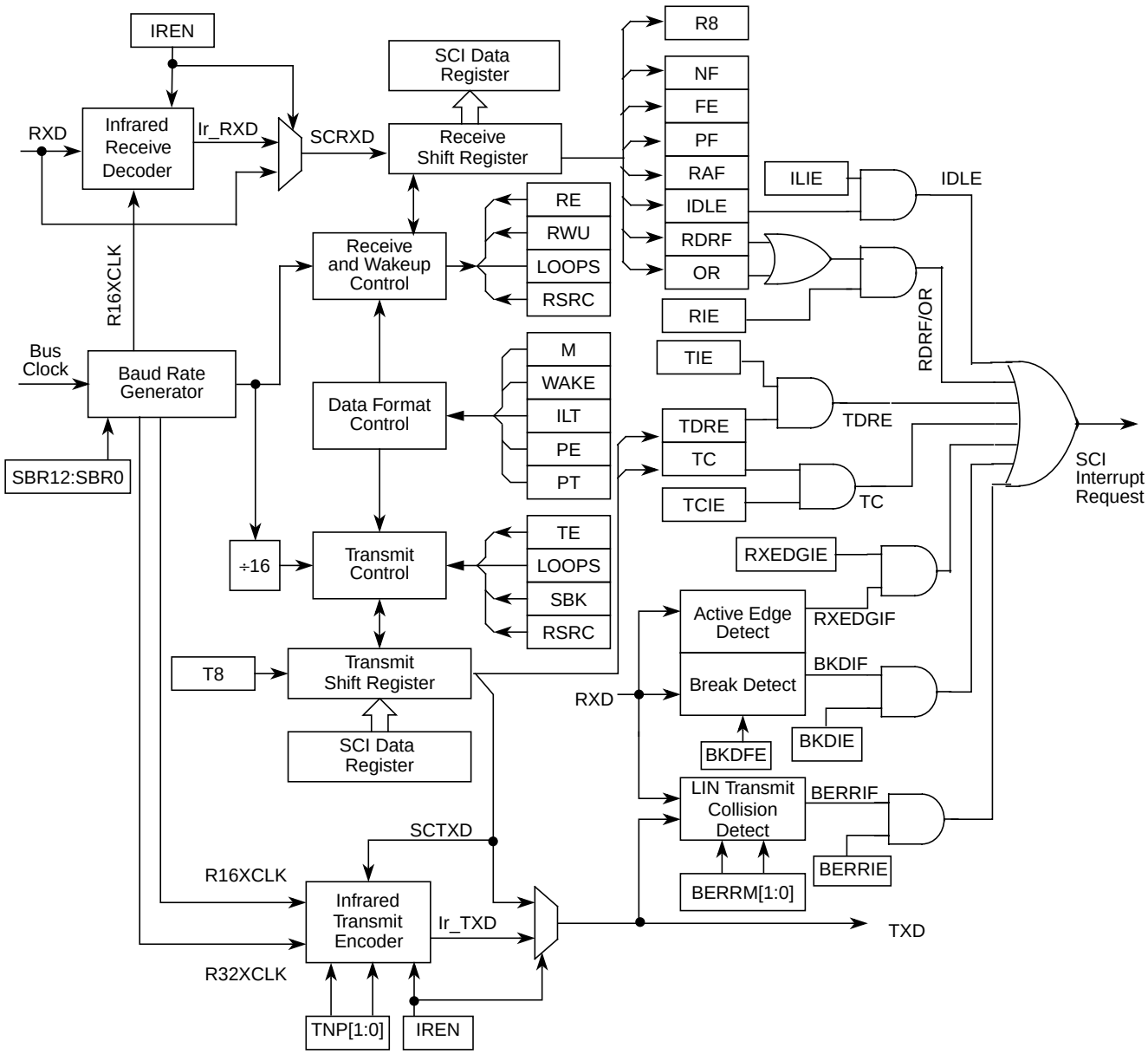

Figure 11-14. Detailed SCI Block Diagram

11.4.1 Infrared Interface Submodule

This module provides the capability of transmitting narrow pulses to an IR LED and receiving narrow pulses and transforming them to serial bits, which are sent to the SCI. The IrDA physical layer specification defines a half-duplex infrared communication link for exchange data. The full standard includes data rates up to 16 Mbits/s. This design covers only data rates between 2.4 Kbits/s and 115.2 Kbits/s.

The infrared submodule consists of two major blocks: the transmit encoder and the receive decoder. The SCI transmits serial bits of data which are encoded by the infrared submodule to transmit a narrow pulse for every zero bit. No pulse is transmitted for every one bit. When receiving data, the IR pulses should be detected using an IR photo diode and transformed to CMOS levels by the IR receive decoder (external from the MCU). The narrow pulses are then stretched by the infrared submodule to get back to a serial bit stream to be received by the SCI.The polarity of transmitted pulses and expected receive pulses can be inverted so that a direct connection can be made to external IrDA transceiver modules that uses active low pulses.

The infrared submodule receives its clock sources from the SCI. One of these two clocks are selected in the infrared submodule in order to generate either 3/16, 1/16, 1/32 or 1/4 narrow pulses during transmission. The infrared block receives two clock sources from the SCI, R16XCLK and R32XCLK, which are configured to generate the narrow pulse width during transmission. The R16XCLK and R32XCLK are internal clocks with frequencies 16 and 32 times the baud rate respectively. Both R16XCLK and R32XCLK clocks are used for transmitting data. The receive decoder uses only the R16XCLK clock.

11.4.1.1 Infrared Transmit Encoder

The infrared transmit encoder converts serial bits of data from transmit shift register to the TXD pin. A narrow pulse is transmitted for a zero bit and no pulse for a one bit. The narrow pulse is sent in the middle of the bit with a duration of 1/32, 1/16, 3/16 or 1/4 of a bit time. A narrow high pulse is transmitted for a zero bit when TXPOL is cleared, while a narrow low pulse is transmitted for a zero bit when TXPOL is set.

11.4.1.2 Infrared Receive Decoder

The infrared receive block converts data from the RXD pin to the receive shift register. A narrow pulse is expected for each zero received and no pulse is expected for each one received. A narrow high pulse is expected for a zero bit when RXPOL is cleared, while a narrow low pulse is expected for a zero bit when RXPOL is set. This receive decoder meets the edge jitter requirement as defined by the IrDA serial infrared physical layer specification.

11.4.2 LIN Support

This module provides some basic support for the LIN protocol. At first this is a break detect circuitry making it easier for the LIN software to distinguish a break character from an incoming data stream. As a further addition is supports a collision detection at the bit level as well as cancelling pending transmissions.

11.4.3 Data Format

The SCI uses the standard NRZ mark/space data format. When Infrared is enabled, the SCI uses RZI data format where zeroes are represented by light pulses and ones remain low. See Figure 11-15 below.

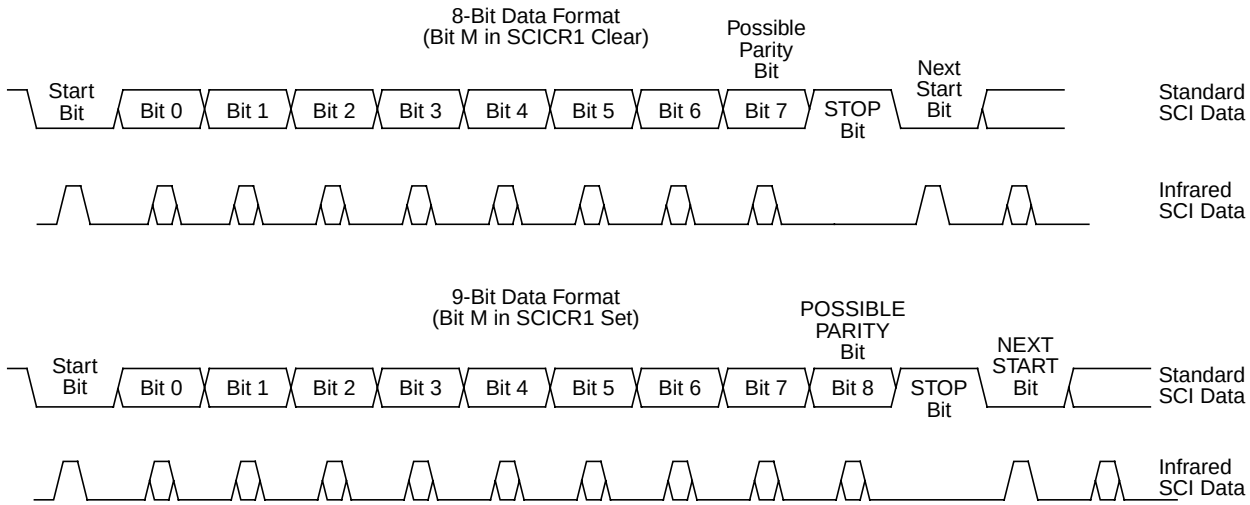

Figure 11-15. SCI Data Formats

Each data character is contained in a frame that includes a start bit, eight or nine data bits, and a stop bit. Clearing the M bit in SCI control register 1 configures the SCI for 8-bit data characters. A frame with eight data bits has a total of 10 bits. Setting the M bit configures the SCI for nine-bit data characters. A frame with nine data bits has a total of 11 bits.

Table 11-13. Example of 8-Bit Data Formats

Start Bit	Data Bits	Address Bits	Parity Bits	Stop Bit
1	8	0	0	1
1	7	0	1	1
1	7	1[1]	0	1

[1] The address bit identifies the frame as an address character. See Section 11.4.6.6, “Receiver Wakeup”.

When the SCI is configured for 9-bit data characters, the ninth data bit is the T8 bit in SCI data register high (SCIDRH). It remains unchanged after transmission and can be used repeatedly without rewriting it. A frame with nine data bits has a total of 11 bits.

Table 11-14. Example of 9-Bit Data Formats

Start Bit	Data Bits	Address Bits	Parity Bits	Stop Bit
1	9	0	0	1
1	8	0	1	1
1	8	1[1]	0	1

[1] The address bit identifies the frame as an address character. See Section 11.4.6.6, “Receiver Wakeup”.

11.4.4 Baud Rate Generation

A 13-bit modulus counter in the baud rate generator derives the baud rate for both the receiver and the transmitter. The value from 0 to 8191 written to the SBR12:SBR0 bits determines the bus clock divisor. The SBR bits are in the SCI baud rate registers (SCIBDH and SCIBDL). The baud rate clock is synchronized with the bus clock and drives the receiver. The baud rate clock divided by 16 drives the transmitter. The receiver has an acquisition rate of 16 samples per bit time.

Baud rate generation is subject to one source of error:

- Integer division of the bus clock may not give the exact target frequency.

Table 11-15 lists some examples of achieving target baud rates with a bus clock frequency of 25 MHz.

When IREN = 0 then,

SCI baud rate = SCI bus clock / (16 * SCIBR[12:0])

Table 11-15. Baud Rates (Example: Bus Clock = 25 MHz)

Bits SBR[12:0]	Receiver Clock (Hz)	Transmitter Clock (Hz)	Target Baud Rate	Error (%)
41	609,756.1	38,109.8	38,400	.76
81	308,642.0	19,290.1	19,200	.47
163	153,374.2	9585.9	9,600	.16
326	76,687.1	4792.9	4,800	.15
651	38,402.5	2400.2	2,400	.01
1302	19,201.2	1200.1	1,200	.01
2604	9600.6	600.0	600	.00
5208	4800.0	300.0	300	.00

11.4.5 Transmitter

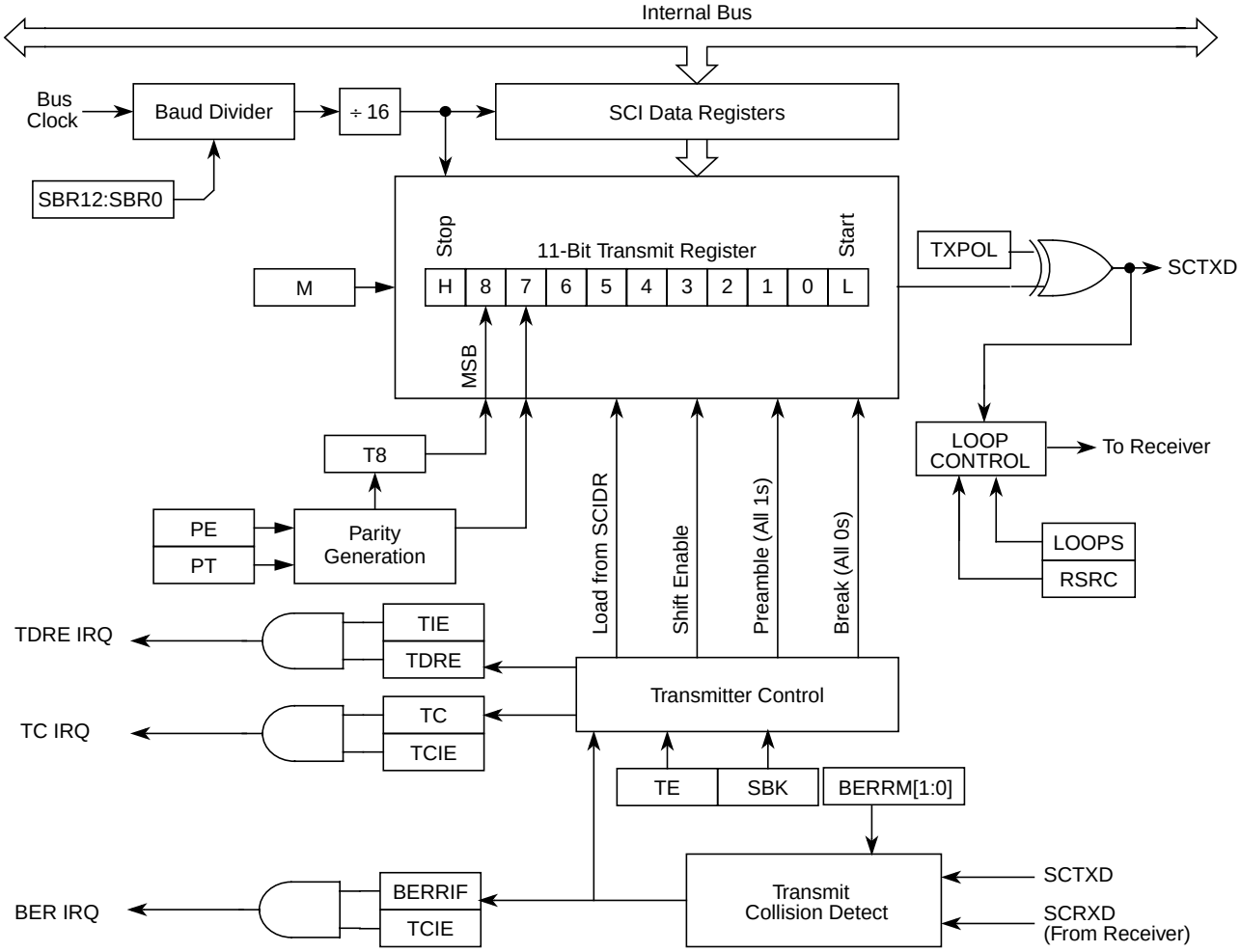

Figure 11-16. Transmitter Block Diagram

11.4.5.1 Transmitter Character Length

The SCI transmitter can accommodate either 8-bit or 9-bit data characters. The state of the M bit in SCI control register 1 (SCICR1) determines the length of data characters. When transmitting 9-bit data, bit T8 in SCI data register high (SCIDRH) is the ninth bit (bit 8).

11.4.5.2 Character Transmission

To transmit data, the MCU writes the data bits to the SCI data registers (SCIDRH/SCIDRL), which in turn are transferred to the transmitter shift register. The transmit shift register then shifts a frame out through the TXD pin, after it has prefaced them with a start bit and appended them with a stop bit. The SCI data registers (SCIDRH and SCIDRL) are the write-only buffers between the internal data bus and the transmit shift register.

The SCI also sets a flag, the transmit data register empty flag (TDRE), every time it transfers data from the buffer (SCIDRH/L) to the transmitter shift register.The transmit driver routine may respond to this flag by writing another byte to the Transmitter buffer (SCIDRH/SCIDRL), while the shift register is still shifting out the first byte.

To initiate an SCI transmission:

1. Configure the SCI:
   a) Select a baud rate. Write this value to the SCI baud registers (SCIBDH/L) to begin the baud rate generator. Remember that the baud rate generator is disabled when the baud rate is zero. Writing to the SCIBDH has no effect without also writing to SCIBDL.
   b) Write to SCICR1 to configure word length, parity, and other configuration bits (LOOPS,RSRC,M,WAKE,ILT,PE,PT).
   c) Enable the transmitter, interrupts, receive, and wake up as required, by writing to the SCICR2 register bits (TIE,TCIE,RIE,ILIE,TE,RE,RWU,SBK). A preamble or idle character will now be shifted out of the transmitter shift register.
2. Transmit Procedure for each byte:
   a) Poll the TDRE flag by reading the SCISR1 or responding to the TDRE interrupt. Keep in mind that the TDRE bit resets to one.
   b) If the TDRE flag is set, write the data to be transmitted to SCIDRH/L, where the ninth bit is written to the T8 bit in SCIDRH if the SCI is in 9-bit data format. A new transmission will not result until the TDRE flag has been cleared.
3. Repeat step 2 for each subsequent transmission.

NOTE

The TDRE flag is set when the shift register is loaded with the next data to be transmitted from SCIDRH/L, which happens, generally speaking, a little over half-way through the stop bit of the previous frame. Specifically, this transfer occurs 9/16ths of a bit time AFTER the start of the stop bit of the previous frame.

Writing the TE bit from 0 to a 1 automatically loads the transmit shift register with a preamble of 10 logic 1s (if M = 0) or 11 logic 1s (if M = 1). After the preamble shifts out, control logic transfers the data from the SCI data register into the transmit shift register. A logic 0 start bit automatically goes into the least significant bit position of the transmit shift register. A logic 1 stop bit goes into the most significant bit position.

Hardware supports odd or even parity. When parity is enabled, the most significant bit (MSB) of the data character is the parity bit.

The transmit data register empty flag, TDRE, in SCI status register 1 (SCISR1) becomes set when the SCI data register transfers a byte to the transmit shift register. The TDRE flag indicates that the SCI data register can accept new data from the internal data bus. If the transmit interrupt enable bit, TIE, in SCI control register 2 (SCICR2) is also set, the TDRE flag generates a transmitter interrupt request.

When the transmit shift register is not transmitting a frame, the TXD pin goes to the idle condition, logic 1. If at any time software clears the TE bit in SCI control register 2 (SCICR2), the transmitter enable signal goes low and the transmit signal goes idle.

If software clears TE while a transmission is in progress (TC = 0), the frame in the transmit shift register continues to shift out. To avoid accidentally cutting off the last frame in a message, always wait for TDRE to go high after the last frame before clearing TE.

To separate messages with preambles with minimum idle line time, use this sequence between messages:

1. Write the last byte of the first message to SCIDRH/L.
2. Wait for the TDRE flag to go high, indicating the transfer of the last frame to the transmit shift register.
3. Queue a preamble by clearing and then setting the TE bit.
4. Write the first byte of the second message to SCIDRH/L.

11.4.5.3 Break Characters

Writing a logic 1 to the send break bit, SBK, in SCI control register 2 (SCICR2) loads the transmit shift register with a break character. A break character contains all logic 0s and has no start, stop, or parity bit. Break character length depends on the M bit in SCI control register 1 (SCICR1). As long as SBK is at logic 1, transmitter logic continuously loads break characters into the transmit shift register. After software clears the SBK bit, the shift register finishes transmitting the last break character and then transmits at least one logic 1. The automatic logic 1 at the end of a break character guarantees the recognition of the start bit of the next frame.

The SCI recognizes a break character when there are 10 or 11(M = 0 or M = 1) consecutive zero received. Depending if the break detect feature is enabled or not receiving a break character has these effects on SCI registers.

If the break detect feature is disabled (BKDFE = 0):

- Sets the framing error flag, FE
- Sets the receive data register full flag, RDRF
- Clears the SCI data registers (SCIDRH/L)
- May set the overrun flag, OR, noise flag, NF, parity error flag, PE, or the receiver active flag, RAF (see 3.4.4 and 3.4.5 SCI Status Register 1 and 2)

If the break detect feature is enabled (BKDFE = 1) there are two scenarios[1]

The break is detected right from a start bit or is detected during a byte reception.

- Sets the break detect interrupt flag, BLDIF
- Does not change the data register full flag, RDRF or overrun flag OR
- Does not change the framing error flag FE, parity error flag PE.
- Does not clear the SCI data registers (SCIDRH/L)
- May set noise flag NF, or receiver active flag RAF.

1. A Break character in this context are either 10 or 11 consecutive zero received bits

Figure 11-17 shows two cases of break detect. In trace RXD_1 the break symbol starts with the start bit, while in RXD_2 the break starts in the middle of a transmission. If BRKDFE = 1, in RXD_1 case there will be no byte transferred to the receive buffer and the RDRF flag will not be modified. Also no framing error or parity error will be flagged from this transfer. In RXD_2 case, however the break signal starts later during the transmission. At the expected stop bit position the byte received so far will be transferred to the receive buffer, the receive data register full flag will be set, a framing error and if enabled and appropriate a parity error will be set. Once the break is detected the BRKDIF flag will be set.

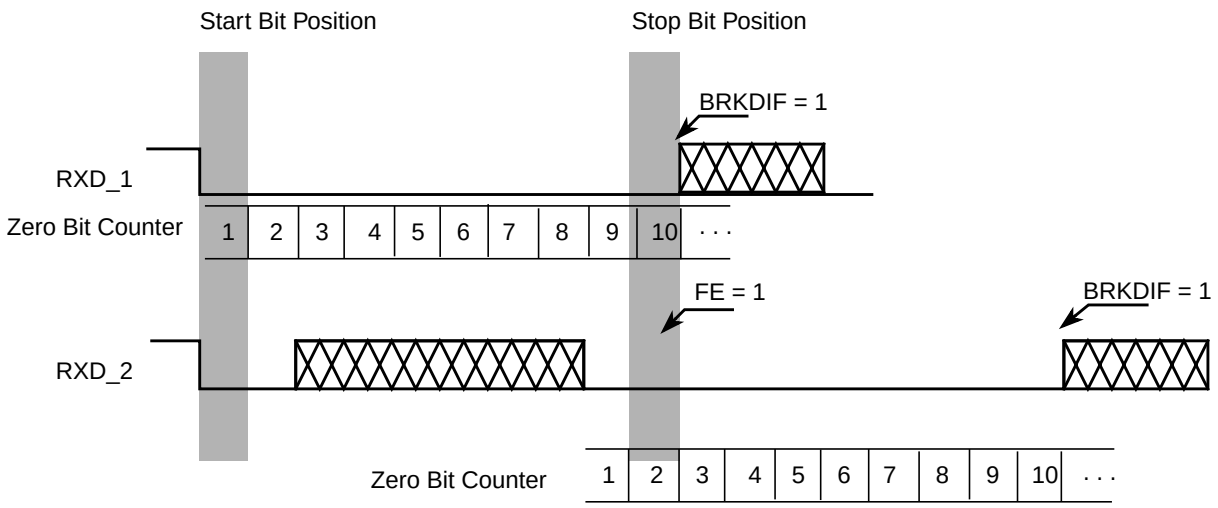

Figure 11-17. Break Detection if BRKDFE = 1 (M = 0)

11.4.5.4 Idle Characters

An idle character (or preamble) contains all logic 1s and has no start, stop, or parity bit. Idle character length depends on the M bit in SCI control register 1 (SCICR1). The preamble is a synchronizing idle character that begins the first transmission initiated after writing the TE bit from 0 to 1.

If the TE bit is cleared during a transmission, the TXD pin becomes idle after completion of the transmission in progress. Clearing and then setting the TE bit during a transmission queues an idle character to be sent after the frame currently being transmitted.

NOTE

When queueing an idle character, return the TE bit to logic 1 before the stop bit of the current frame shifts out through the TXD pin. Setting TE after the stop bit appears on TXD causes data previously written to the SCI data register to be lost. Toggle the TE bit for a queued idle character while the TDRE flag is set and immediately before writing the next byte to the SCI data register.

If the TE bit is clear and the transmission is complete, the SCI is not the master of the TXD pin

11.4.5.5 LIN Transmit Collision Detection

This module allows to check for collisions on the LIN bus.

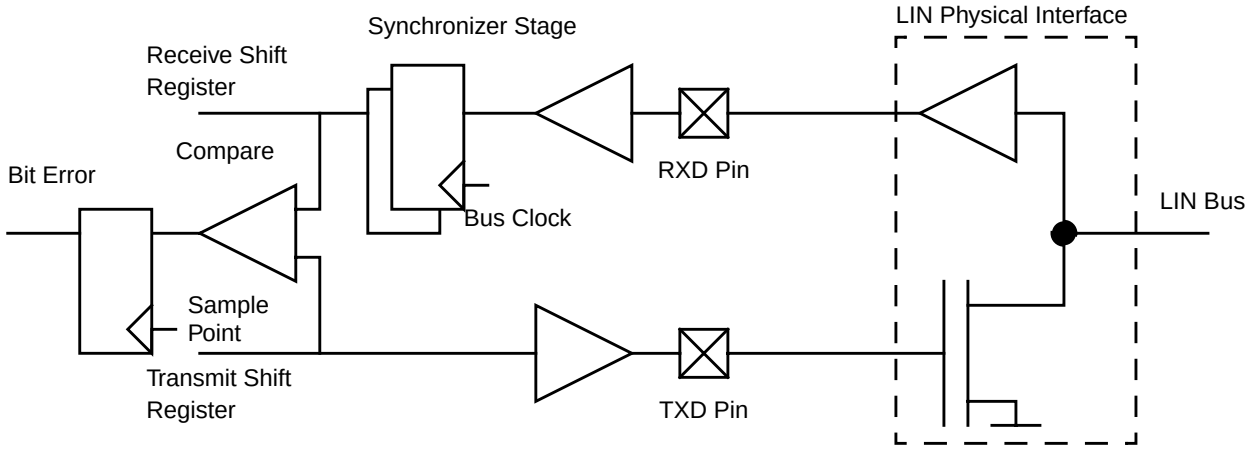

Figure 11-18. Collision Detect Principle

If the bit error circuit is enabled (BERRM[1:0] = 0:1 or = 1:0]), the error detect circuit will compare the transmitted and the received data stream at a point in time and flag any mismatch. The timing checks run when transmitter is active (not idle). As soon as a mismatch between the transmitted data and the received data is detected the following happens:

- The next bit transmitted will have a high level (TXPOL = 0) or low level (TXPOL = 1)
- The transmission is aborted and the byte in transmit buffer is discarded.
- the transmit data register empty and the transmission complete flag will be set
- The bit error interrupt flag, BERRIF, will be set.
- No further transmissions will take place until the BERRIF is cleared.

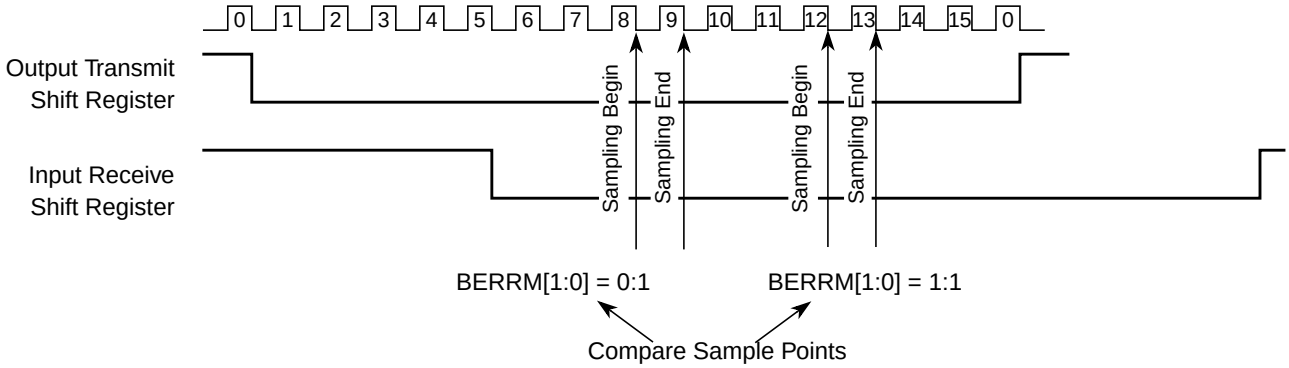

Figure 11-19. Timing Diagram Bit Error Detection

If the bit error detect feature is disabled, the bit error interrupt flag is cleared.

NOTE

The RXPOL and TXPOL bit should be set the same when transmission collision detect feature is enabled, otherwise the bit error interrupt flag may be set incorrectly.

11.4.6 Receiver

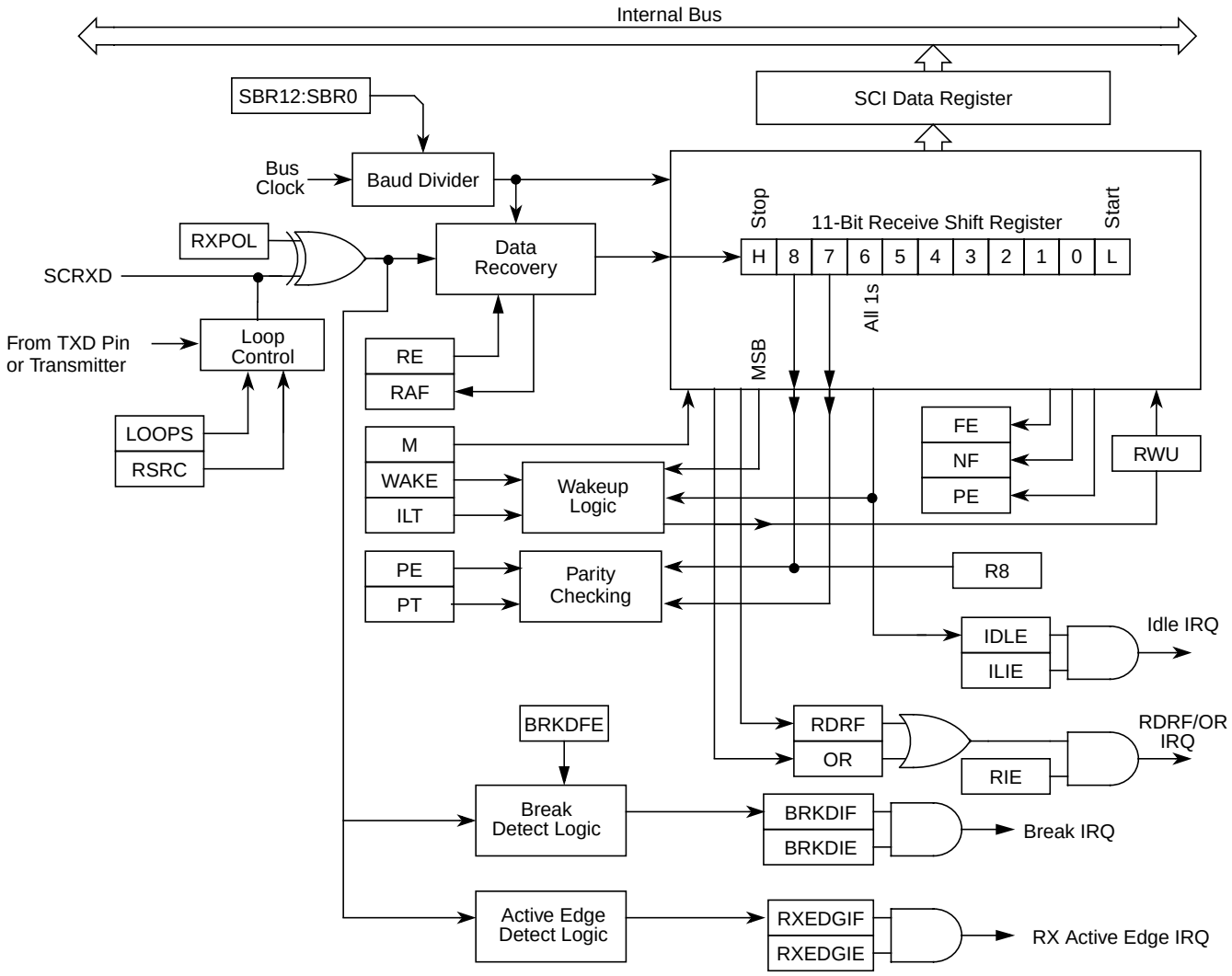

Figure 11-20. SCI Receiver Block Diagram

11.4.6.1 Receiver Character Length

The SCI receiver can accommodate either 8-bit or 9-bit data characters. The state of the M bit in SCI control register 1 (SCICR1) determines the length of data characters. When receiving 9-bit data, bit R8 in SCI data register high (SCIDRH) is the ninth bit (bit 8).

11.4.6.2 Character Reception

During an SCI reception, the receive shift register shifts a frame in from the RXD pin. The SCI data register is the read-only buffer between the internal data bus and the receive shift register.

After a complete frame shifts into the receive shift register, the data portion of the frame transfers to the SCI data register. The receive data register full flag, RDRF, in SCI status register 1 (SCISR1) becomes set,

indicating that the received byte can be read. If the receive interrupt enable bit, RIE, in SCI control register 2 (SCICR2) is also set, the RDRF flag generates an RDRF interrupt request.

11.4.6.3 Data Sampling

The RT clock rate. The RT clock is an internal signal with a frequency 16 times the baud rate. To adjust for baud rate mismatch, the RT clock (see Figure 11-21) is re-synchronized:

- After every start bit
- After the receiver detects a data bit change from logic 1 to logic 0 (after the majority of data bit samples at RT8, RT9, and RT10 returns a valid logic 1 and the majority of the next RT8, RT9, and RT10 samples returns a valid logic 0)

To locate the start bit, data recovery logic does an asynchronous search for a logic 0 preceded by three logic 1s.When the falling edge of a possible start bit occurs, the RT clock begins to count to 16.

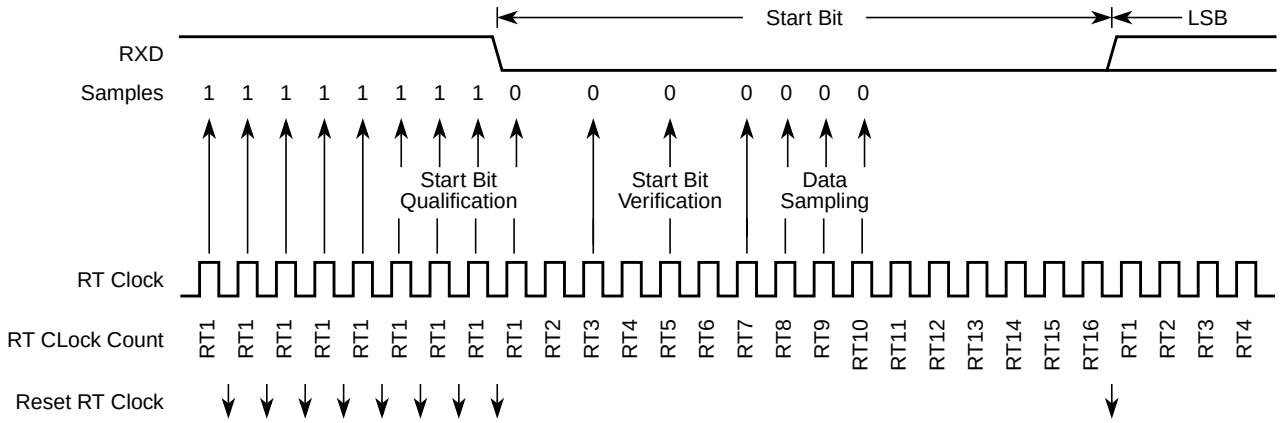

Figure 11-21. Receiver Data Sampling

To verify the start bit and to detect noise, data recovery logic takes samples at RT3, RT5, and RT7. Figure 11-16 summarizes the results of the start bit verification samples.

Table 11-16. Start Bit Verification

RT3, RT5, and RT7 Samples	Start Bit Verification	Noise Flag
000	Yes	0
001	Yes	1
010	Yes	1
011	No	0
100	Yes	1
101	No	0
110	No	0
111	No	0

If start bit verification is not successful, the RT clock is reset and a new search for a start bit begins.

To determine the value of a data bit and to detect noise, recovery logic takes samples at RT8, RT9, and RT10. Table 11-17 summarizes the results of the data bit samples.

Table 11-17. Data Bit Recovery

RT8, RT9, and RT10 Samples	Data Bit Determination	Noise Flag
000	0	0
001	0	1
010	0	1
011	1	1
100	0	1
101	1	1
110	1	1
111	1	0

NOTE

The RT8, RT9, and RT10 samples do not affect start bit verification. If any or all of the RT8, RT9, and RT10 start bit samples are logic 1s following a successful start bit verification, the noise flag (NF) is set and the receiver assumes that the bit is a start bit (logic 0).

To verify a stop bit and to detect noise, recovery logic takes samples at RT8, RT9, and RT10. Table 11-18 summarizes the results of the stop bit samples.

Table 11-18. Stop Bit Recovery

RT8, RT9, and RT10 Samples	Framing Error Flag	Noise Flag
000	1	0
001	1	1
010	1	1
011	0	1
100	1	1
101	0	1
110	0	1
111	0	0

In Figure 11-22 the verification samples RT3 and RT5 determine that the first low detected was noise and not the beginning of a start bit. The RT clock is reset and the start bit search begins again. The noise flag is not set because the noise occurred before the start bit was found.

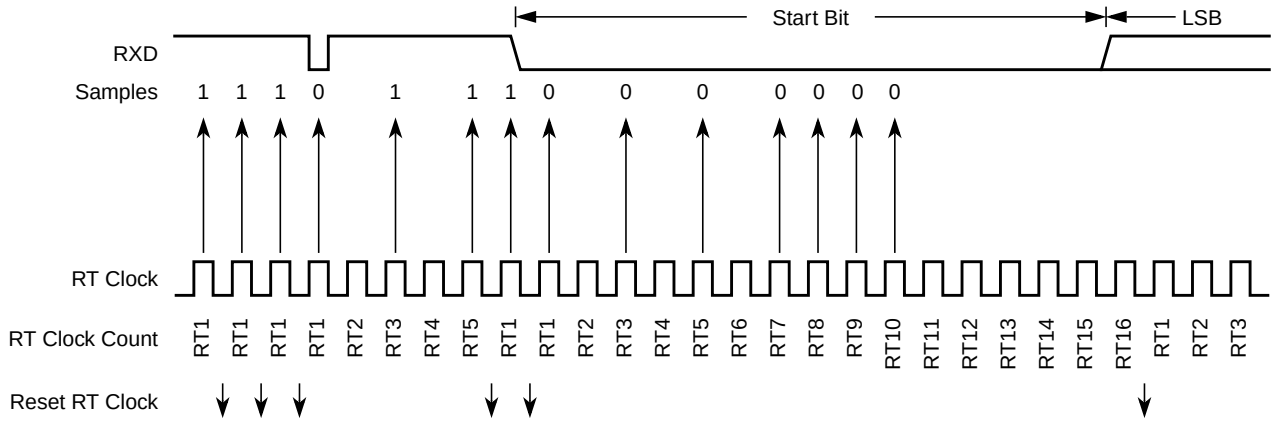

Figure 11-22. Start Bit Search Example 1

In Figure 11-23, verification sample at RT3 is high. The RT3 sample sets the noise flag. Although the perceived bit time is misaligned, the data samples RT8, RT9, and RT10 are within the bit time and data recovery is successful.

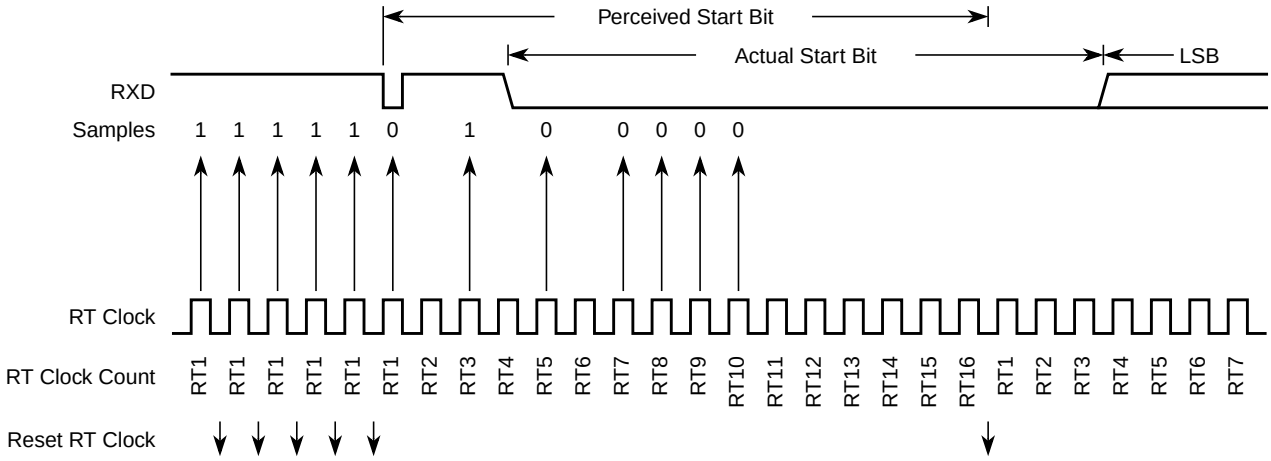

Figure 11-23. Start Bit Search Example 2

In Figure 11-24, a large burst of noise is perceived as the beginning of a start bit, although the test sample at RT5 is high. The RT5 sample sets the noise flag. Although this is a worst-case misalignment of perceived bit time, the data samples RT8, RT9, and RT10 are within the bit time and data recovery is successful.

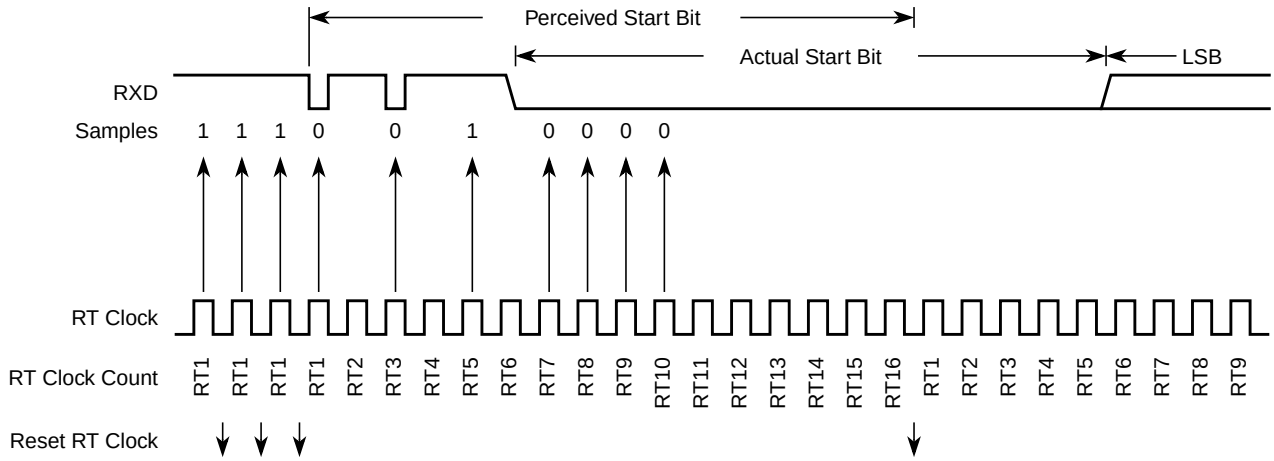

Figure 11-24. Start Bit Search Example 3

Figure 11-25 shows the effect of noise early in the start bit time. Although this noise does not affect proper synchronization with the start bit time, it does set the noise flag.

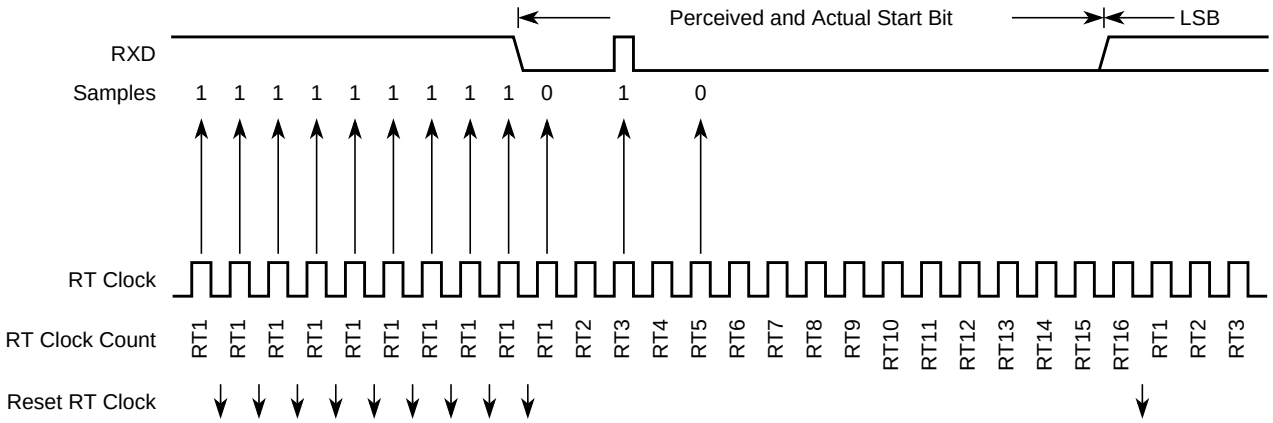

Figure 11-25. Start Bit Search Example 4

Figure 11-26 shows a burst of noise near the beginning of the start bit that resets the RT clock. The sample after the reset is low but is not preceded by three high samples that would qualify as a falling edge. Depending on the timing of the start bit search and on the data, the frame may be missed entirely or it may set the framing error flag.

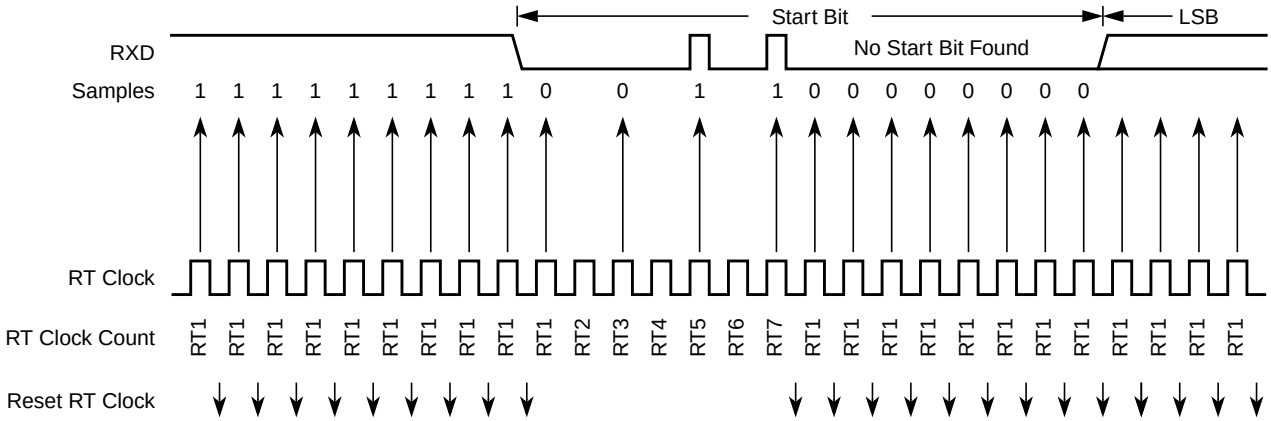

Figure 11-26. Start Bit Search Example 5

In Figure 11-27, a noise burst makes the majority of data samples RT8, RT9, and RT10 high. This sets the noise flag but does not reset the RT clock. In start bits only, the RT8, RT9, and RT10 data samples are ignored.

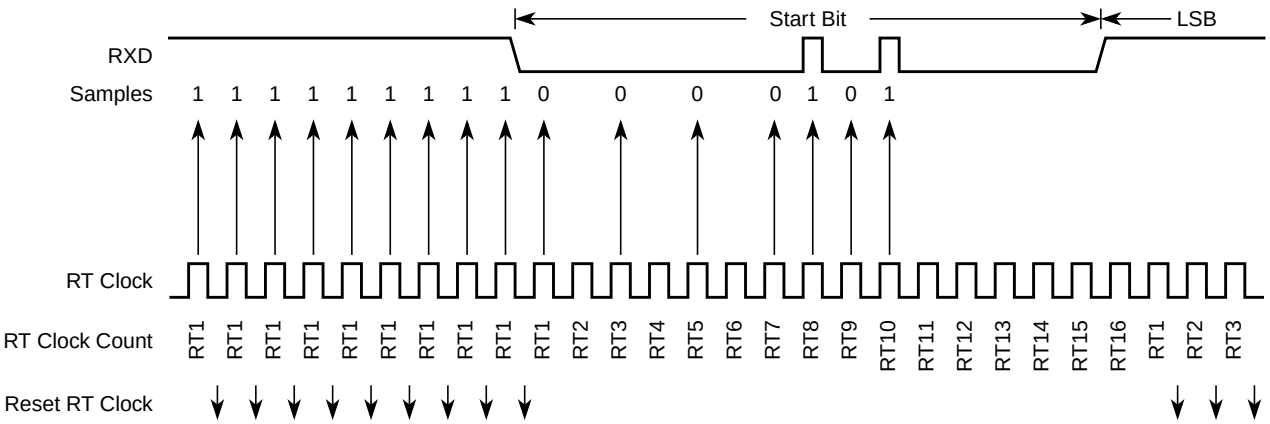

Figure 11-27. Start Bit Search Example 6

11.4.6.4 Framing Errors

If the data recovery logic does not detect a logic 1 where the stop bit should be in an incoming frame, it sets the framing error flag, FE, in SCI status register 1 (SCISR1). A break character also sets the FE flag because a break character has no stop bit. The FE flag is set at the same time that the RDRF flag is set.

11.4.6.5 Baud Rate Tolerance

A transmitting device may be operating at a baud rate below or above the receiver baud rate. Accumulated bit time misalignment can cause one of the three stop bit data samples (RT8, RT9, and RT10) to fall outside the actual stop bit. A noise error will occur if the RT8, RT9, and RT10 samples are not all the same logical values. A framing error will occur if the receiver clock is misaligned in such a way that the majority of the RT8, RT9, and RT10 stop bit samples are a logic zero.

As the receiver samples an incoming frame, it re-synchronizes the RT clock on any valid falling edge within the frame. Re synchronization within frames will correct a misalignment between transmitter bit times and receiver bit times.

11.4.6.5.1 Slow Data Tolerance

Figure 11-28 shows how much a slow received frame can be misaligned without causing a noise error or a framing error. The slow stop bit begins at RT8 instead of RT1 but arrives in time for the stop bit data samples at RT8, RT9, and RT10.

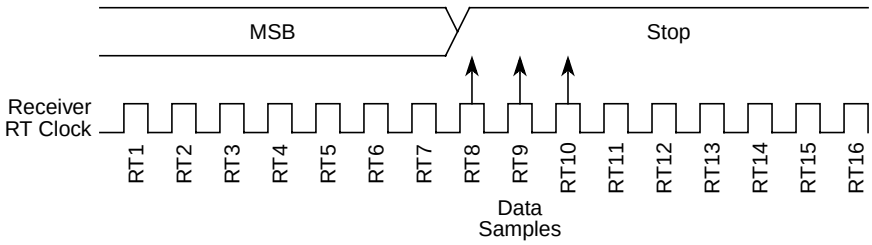

Figure 11-28. Slow Data

Let's take RTr as receiver RT clock and RTt as transmitter RT clock.

For an 8-bit data character, it takes the receiver 9 bit times x 16 RTr cycles +7 RTr cycles = 151 RTr cycles to start data sampling of the stop bit.

With the misaligned character shown in Figure 11-28, the receiver counts 151 RTr cycles at the point when the count of the transmitting device is 9 bit times x 16 RTt cycles = 144 RTt cycles.

The maximum percent difference between the receiver count and the transmitter count of a slow 8-bit data character with no errors is:

$$((151 - 144) / 151) \times 100 = 4.63\%$$

For a 9-bit data character, it takes the receiver 10 bit times x 16 RTr cycles + 7 RTr cycles = 167 RTr cycles to start data sampling of the stop bit.

With the misaligned character shown in Figure 11-28, the receiver counts 167 RTr cycles at the point when the count of the transmitting device is 10 bit times x 16 RTt cycles = 160 RTt cycles.

The maximum percent difference between the receiver count and the transmitter count of a slow 9-bit character with no errors is:

$$((167 - 160) / 167) \text{ X } 100 = 4.19\%$$

11.4.6.5.2 Fast Data Tolerance

Figure 11-29 shows how much a fast received frame can be misaligned. The fast stop bit ends at RT10 instead of RT16 but is still sampled at RT8, RT9, and RT10.

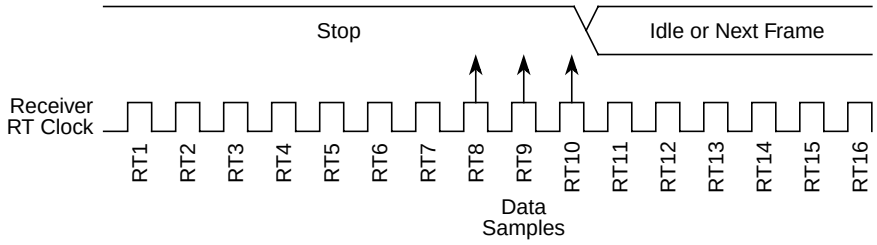

Figure 11-29. Fast Data

For an 8-bit data character, it takes the receiver 9 bit times x 16 RTr cycles + 10 RTr cycles = 154 RTr cycles to finish data sampling of the stop bit.

With the misaligned character shown in Figure 11-29, the receiver counts 154 RTr cycles at the point when the count of the transmitting device is 10 bit times x 16 RTt cycles = 160 RTt cycles.

The maximum percent difference between the receiver count and the transmitter count of a fast 8-bit character with no errors is:

$$((160 - 154) / 160) \times 100 = 3.75\%$$

For a 9-bit data character, it takes the receiver 10 bit times x 16 RTr cycles + 10 RTr cycles = 170 RTr cycles to finish data sampling of the stop bit.

With the misaligned character shown in Figure 11-29, the receiver counts 170 RTr cycles at the point when the count of the transmitting device is 11 bit times x 16 RTt cycles = 176 RTt cycles.

The maximum percent difference between the receiver count and the transmitter count of a fast 9-bit character with no errors is:

$$((176 - 170) /176) \times 100 = 3.40\%$$

11.4.6.6 Receiver Wakeup

To enable the SCI to ignore transmissions intended only for other receivers in multiple-receiver systems, the receiver can be put into a standby state. Setting the receiver wakeup bit, RWU, in SCI control register 2 (SCICR2) puts the receiver into standby state during which receiver interrupts are disabled.The SCI will still load the receive data into the SCIDRH/L registers, but it will not set the RDRF flag.

The transmitting device can address messages to selected receivers by including addressing information in the initial frame or frames of each message.

The WAKE bit in SCI control register 1 (SCICR1) determines how the SCI is brought out of the standby state to process an incoming message. The WAKE bit enables either idle line wakeup or address mark wakeup.

11.4.6.6.1 Idle Input line Wakeup (WAKE = 0)

In this wakeup method, an idle condition on the RXD pin clears the RWU bit and wakes up the SCI. The initial frame or frames of every message contain addressing information. All receivers evaluate the addressing information, and receivers for which the message is addressed process the frames that follow. Any receiver for which a message is not addressed can set its RWU bit and return to the standby state. The RWU bit remains set and the receiver remains on standby until another idle character appears on the RXD pin.

Idle line wakeup requires that messages be separated by at least one idle character and that no message contains idle characters.

The idle character that wakes a receiver does not set the receiver idle bit, IDLE, or the receive data register full flag, RDRF.

The idle line type bit, ILT, determines whether the receiver begins counting logic 1s as idle character bits after the start bit or after the stop bit. ILT is in SCI control register 1 (SCICR1).

11.4.6.6.2 Address Mark Wakeup (WAKE = 1)

In this wakeup method, a logic 1 in the most significant bit (MSB) position of a frame clears the RWU bit and wakes up the SCI. The logic 1 in the MSB position marks a frame as an address frame that contains addressing information. All receivers evaluate the addressing information, and the receivers for which the message is addressed process the frames that follow.Any receiver for which a message is not addressed can set its RWU bit and return to the standby state. The RWU bit remains set and the receiver remains on standby until another address frame appears on the RXD pin.

The logic 1 MSB of an address frame clears the receiver's RWU bit before the stop bit is received and sets the RDRF flag.

Address mark wakeup allows messages to contain idle characters but requires that the MSB be reserved for use in address frames.

NOTE

With the WAKE bit clear, setting the RWU bit after the RXD pin has been idle can cause the receiver to wake up immediately.

11.4.7 Single-Wire Operation

Normally, the SCI uses two pins for transmitting and receiving. In single-wire operation, the RXD pin is disconnected from the SCI. The SCI uses the TXD pin for both receiving and transmitting.

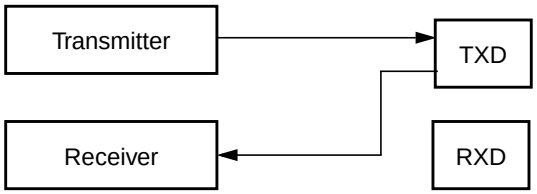

Figure 11-30. Single-Wire Operation (LOOPS = 1, RSRC = 1)

Enable single-wire operation by setting the LOOPS bit and the receiver source bit, RSRC, in SCI control register 1 (SCICR1). Setting the LOOPS bit disables the path from the RXD pin to the receiver. Setting the RSRC bit connects the TXD pin to the receiver. Both the transmitter and receiver must be enabled (TE = 1 and RE = 1).The TXDIR bit (SCISR2[1]) determines whether the TXD pin is going to be used as an input (TXDIR = 0) or an output (TXDIR = 1) in this mode of operation.

NOTE

In single-wire operation data from the TXD pin is inverted if RXPOL is set.

11.4.8 Loop Operation

In loop operation the transmitter output goes to the receiver input. The RXD pin is disconnected from the SCI.

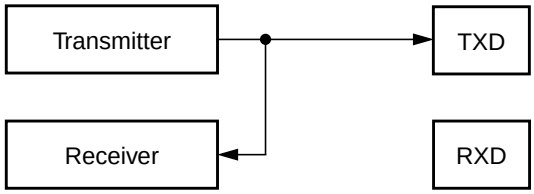

Figure 11-31. Loop Operation (LOOPS = 1, RSRC = 0)

Enable loop operation by setting the LOOPS bit and clearing the RSRC bit in SCI control register 1 (SCICR1). Setting the LOOPS bit disables the path from the RXD pin to the receiver. Clearing the RSRC bit connects the transmitter output to the receiver input. Both the transmitter and receiver must be enabled (TE = 1 and RE = 1).

NOTE

In loop operation data from the transmitter is not recognized by the receiver if RXPOL and TXPOL are not the same.

11.5 Initialization/Application Information

11.5.1 Reset Initialization

See Section 11.3.2, “Register Descriptions”.

11.5.2 Modes of Operation

11.5.2.1 Run Mode

Normal mode of operation.

To initialize a SCI transmission, see Section 11.4.5.2, “Character Transmission”.

11.5.2.2 Wait Mode

SCI operation in wait mode depends on the state of the SCISWAI bit in the SCI control register 1 (SCICR1).

- If SCISWAI is clear, the SCI operates normally when the CPU is in wait mode.
- If SCISWAI is set, SCI clock generation ceases and the SCI module enters a power-conservation state when the CPU is in wait mode. Setting SCISWAI does not affect the state of the receiver enable bit, RE, or the transmitter enable bit, TE.

  If SCISWAI is set, any transmission or reception in progress stops at wait mode entry. The transmission or reception resumes when either an internal or external interrupt brings the CPU out of wait mode. Exiting wait mode by reset aborts any transmission or reception in progress and resets the SCI.

11.5.2.3 Stop Mode

The SCI is inactive during stop mode for reduced power consumption. The STOP instruction does not affect the SCI register states, but the SCI bus clock will be disabled. The SCI operation resumes from where it left off after an external interrupt brings the CPU out of stop mode. Exiting stop mode by reset aborts any transmission or reception in progress and resets the SCI.

The receive input active edge detect circuit is still active in stop mode. An active edge on the receive input can be used to bring the CPU out of stop mode.

11.5.3 Interrupt Operation

This section describes the interrupt originated by the SCI block.The MCU must service the interrupt requests. Table 11-19 lists the eight interrupt sources of the SCI.

Table 11-19. SCI Interrupt Sources

Interrupt	Source	Local Enable	Description
TDRE	SCISR1[7]	TIE	Active high level. Indicates that a byte was transferred from SCIDRH/L to the transmit shift register.
TC	SCISR1[6]	TCIE	Active high level. Indicates that a transmit is complete.
RDRF	SCISR1[5]	RIE	Active high level. The RDRF interrupt indicates that received data is available in the SCI data register.
OR	SCISR1[3]		Active high level. This interrupt indicates that an overrun condition has occurred.
IDLE	SCISR1[4]	ILIE	Active high level. Indicates that receiver input has become idle.
RXEDGIF	SCIASR1[7]	RXEDGIE	Active high level. Indicates that an active edge (falling for RXPOL = 0, rising for RXPOL = 1) was detected.
BERRIF	SCIASR1[1]	BERRIE	Active high level. Indicates that a mismatch between transmitted and received data in a single wire application has happened.
BKDIF	SCIASR1[0]	BRKDIE	Active high level. Indicates that a break character has been received.

11.5.3.1 Description of Interrupt Operation

The SCI only originates interrupt requests. The following is a description of how the SCI makes a request and how the MCU should acknowledge that request. The interrupt vector offset and interrupt number are chip dependent. The SCI only has a single interrupt line (SCI Interrupt Signal, active high operation) and all the following interrupts, when generated, are ORed together and issued through that port.

11.5.3.1.1 TDRE Description

The TDRE interrupt is set high by the SCI when the transmit shift register receives a byte from the SCI data register. A TDRE interrupt indicates that the transmit data register (SCIDRH/L) is empty and that a new byte can be written to the SCIDRH/L for transmission.Clear TDRE by reading SCI status register 1 with TDRE set and then writing to SCI data register low (SCIDRL).

11.5.3.1.2 TC Description

The TC interrupt is set by the SCI when a transmission has been completed. Transmission is completed when all bits including the stop bit (if transmitted) have been shifted out and no data is queued to be transmitted. No stop bit is transmitted when sending a break character and the TC flag is set (providing there is no more data queued for transmission) when the break character has been shifted out. A TC interrupt indicates that there is no transmission in progress. TC is set high when the TDRE flag is set and no data, preamble, or break character is being transmitted. When TC is set, the TXD pin becomes idle (logic 1). Clear TC by reading SCI status register 1 (SCISR1) with TC set and then writing to SCI data register low (SCIDRL).TC is cleared automatically when data, preamble, or break is queued and ready to be sent.

11.5.3.1.3 RDRF Description

The RDRF interrupt is set when the data in the receive shift register transfers to the SCI data register. A RDRF interrupt indicates that the received data has been transferred to the SCI data register and that the byte can now be read by the MCU. The RDRF interrupt is cleared by reading the SCI status register one (SCISR1) and then reading SCI data register low (SCIDRL).

11.5.3.1.4 OR Description

The OR interrupt is set when software fails to read the SCI data register before the receive shift register receives the next frame. The newly acquired data in the shift register will be lost in this case, but the data already in the SCI data registers is not affected. The OR interrupt is cleared by reading the SCI status register one (SCISR1) and then reading SCI data register low (SCIDRL).

11.5.3.1.5 IDLE Description

The IDLE interrupt is set when 10 consecutive logic 1s (if M = 0) or 11 consecutive logic 1s (if M = 1) appear on the receiver input. Once the IDLE is cleared, a valid frame must again set the RDRF flag before an idle condition can set the IDLE flag. Clear IDLE by reading SCI status register 1 (SCISR1) with IDLE set and then reading SCI data register low (SCIDRL).

11.5.3.1.6 RXEDGIF Description

The RXEDGIF interrupt is set when an active edge (falling if RXPOL = 0, rising if RXPOL = 1) on the RXD pin is detected. Clear RXEDGIF by writing a “1” to the SCIASR1 SCI alternative status register 1.

11.5.3.1.7 BERRIF Description

The BERRIF interrupt is set when a mismatch between the transmitted and the received data in a single wire application like LIN was detected. Clear BERRIF by writing a “1” to the SCIASR1 SCI alternative status register 1. This flag is also cleared if the bit error detect feature is disabled.

11.5.3.1.8 BKDIF Description

The BKDIF interrupt is set when a break signal was received. Clear BKDIF by writing a “1” to the SCIASR1 SCI alternative status register 1. This flag is also cleared if break detect feature is disabled.

11.5.4 Recovery from Wait Mode

The SCI interrupt request can be used to bring the CPU out of wait mode.

11.5.5 Recovery from Stop Mode

An active edge on the receive input can be used to bring the CPU out of stop mode.

Chapter 12
Serial Peripheral Interface (S12SPIV4)

12.1 Introduction

The SPI module allows a duplex, synchronous, serial communication between the MCU and peripheral devices. Software can poll the SPI status flags or the SPI operation can be interrupt driven.

12.1.1 Glossary of Terms

SPI	Serial Peripheral Interface
$\overline{SS}$	Slave Select
SCK	Serial Clock
MOSI	Master Output, Slave Input
MISO	Master Input, Slave Output
MOMI	Master Output, Master Input
SISO	Slave Input, Slave Output

12.1.2 Features

The SPI includes these distinctive features:

- Master mode and slave mode
- Bidirectional mode
- Slave select output
- Mode fault error flag with CPU interrupt capability
- Double-buffered data register
- Serial clock with programmable polarity and phase
- Control of SPI operation during wait mode

12.1.3 Modes of Operation

The SPI functions in three modes: run, wait, and stop.

- Run mode
  This is the basic mode of operation.
- Wait mode

SPI operation in wait mode is a configurable low power mode, controlled by the SPISWAI bit located in the SPICR2 register. In wait mode, if the SPISWAI bit is clear, the SPI operates like in run mode. If the SPISWAI bit is set, the SPI goes into a power conservative state, with the SPI clock generation turned off. If the SPI is configured as a master, any transmission in progress stops, but is resumed after CPU goes into run mode. If the SPI is configured as a slave, reception and transmission of a byte continues, so that the slave stays synchronized to the master.

- Stop mode

  The SPI is inactive in stop mode for reduced power consumption. If the SPI is configured as a master, any transmission in progress stops, but is resumed after CPU goes into run mode. If the SPI is configured as a slave, reception and transmission of a byte continues, so that the slave stays synchronized to the master.

This is a high level description only, detailed descriptions of operating modes are contained in Section 12.4.7, “Low Power Mode Options”.

12.1.4 Block Diagram

Figure 12-1 gives an overview on the SPI architecture. The main parts of the SPI are status, control and data registers, shifter logic, baud rate generator, master/slave control logic, and port control logic.

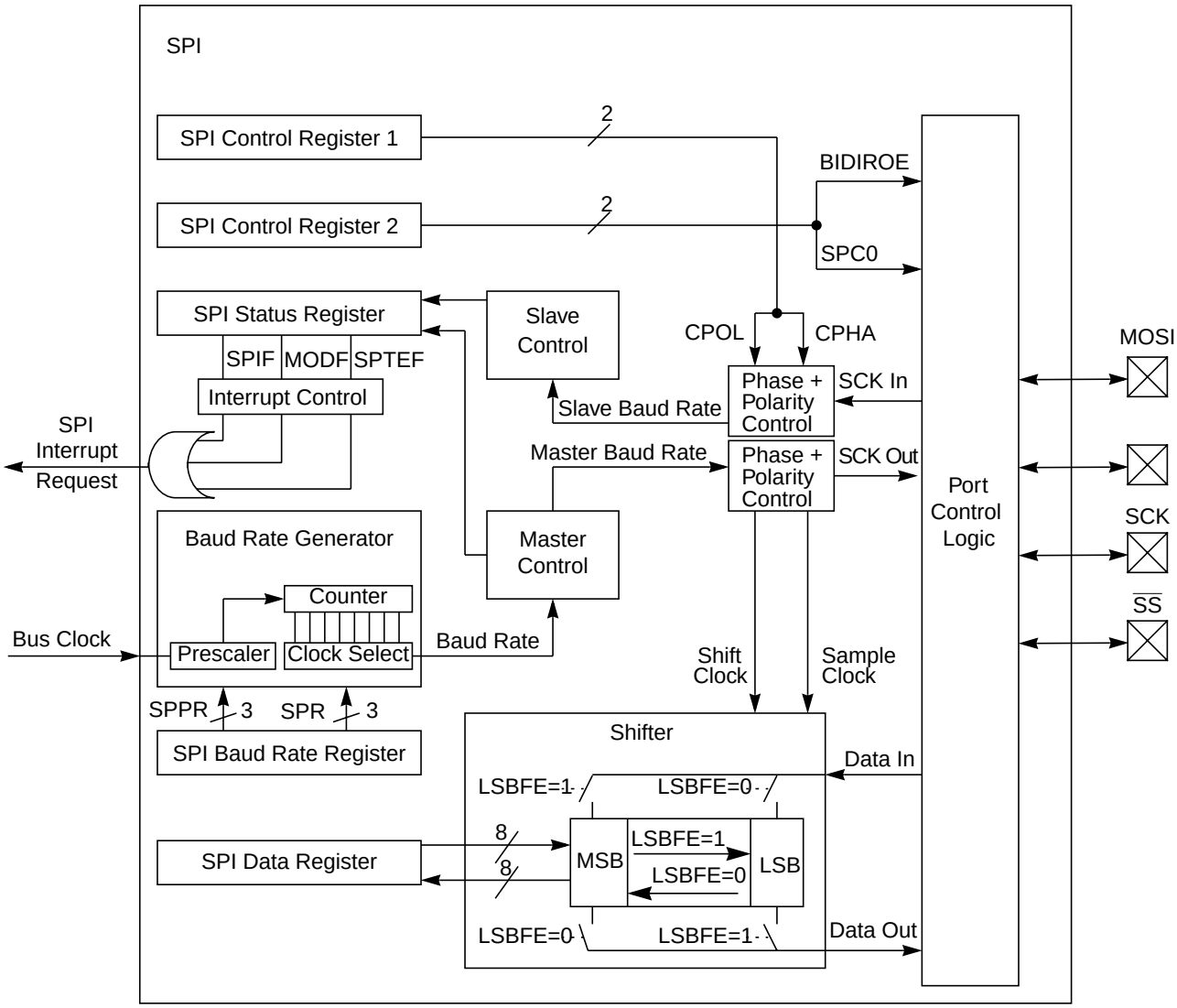

Figure 12-1. SPI Block Diagram

12.2 External Signal Description

This section lists the name and description of all ports including inputs and outputs that do, or may, connect off chip. The SPI module has a total of four external pins.

12.2.1 MOSI — Master Out/Slave In Pin

This pin is used to transmit data out of the SPI module when it is configured as a master and receive data when it is configured as slave.

12.2.2 MISO — Master In/Slave Out Pin

This pin is used to transmit data out of the SPI module when it is configured as a slave and receive data when it is configured as master.

12.2.3 $\overline{SS}$ — Slave Select Pin

This pin is used to output the select signal from the SPI module to another peripheral with which a data transfer is to take place when it is configured as a master and it is used as an input to receive the slave select signal when the SPI is configured as slave.

12.2.4 SCK — Serial Clock Pin

In master mode, this is the synchronous output clock. In slave mode, this is the synchronous input clock.

12.3 Memory Map and Register Definition

This section provides a detailed description of address space and registers used by the SPI.

12.3.1 Module Memory Map

The memory map for the SPI is given in Figure 12-2. The address listed for each register is the sum of a base address and an address offset. The base address is defined at the SoC level and the address offset is defined at the module level. Reads from the reserved bits return zeros and writes to the reserved bits have no effect.

Register Name		Bit 7	6	5	4	3	2	1	Bit 0
SPICR1	R/W	SPIE	SPE	SPTIE	MSTR	CPOL	CPHA	SSOE	LSBFE
SPICR2	R	0	0	0	MODFEN	BIDIROE	0	SPISWAI	SPC0
	W								
SPIBR	R	0	SPPR2	SPPR1	SPPR0	0	SPR2	SPR1	SPR0
	W								
SPISR	R	SPIF	0	SPTEF	MODF	0	0	0	0
	W								
Reserved	R/W								
SPIDR	R/W	Bit 7	6	5	4	3	2	1	Bit 0
Reserved	R/W								
Reserved	R/W								

= Unimplemented or Reserved

Figure 12-2. SPI Register Summary

12.3.2 Register Descriptions

This section consists of register descriptions in address order. Each description includes a standard register diagram with an associated figure number. Details of register bit and field function follow the register diagrams, in bit order.

12.3.2.1 SPI Control Register 1 (SPICR1)

	7	6	5	4	3	2	1	0
R W	SPIE	SPE	SPTIE	MSTR	CPOL	CPHA	SSOE	LSBFE
Reset	0	0	0	0	0	1	0	0

Figure 12-3. SPI Control Register 1 (SPICR1)

Read: Anytime

Write: Anytime

Table 12-1. SPICR1 Field Descriptions

Field	Description
7 SPIE	**SPI Interrupt Enable Bit** — This bit enables SPI interrupt requests, if SPIF or MODF status flag is set. 0 SPI interrupts disabled. 1 SPI interrupts enabled.
6 SPE	**SPI System Enable Bit** — This bit enables the SPI system and dedicates the SPI port pins to SPI system functions. If SPE is cleared, SPI is disabled and forced into idle state, status bits in SPISR register are reset. 0 SPI disabled (lower power consumption). 1 SPI enabled, port pins are dedicated to SPI functions.
5 SPTIE	**SPI Transmit Interrupt Enable** — This bit enables SPI interrupt requests, if SPTEF flag is set. 0 SPTEF interrupt disabled. 1 SPTEF interrupt enabled.
4 MSTR	**SPI Master/Slave Mode Select Bit** — This bit selects whether the SPI operates in master or slave mode. Switching the SPI from master to slave or vice versa forces the SPI system into idle state. 0 SPI is in slave mode. 1 SPI is in master mode.
3 CPOL	**SPI Clock Polarity Bit** — This bit selects an inverted or non-inverted SPI clock. To transmit data between SPI modules, the SPI modules must have identical CPOL values. In master mode, a change of this bit will abort a transmission in progress and force the SPI system into idle state. 0 Active-high clocks selected. In idle state SCK is low. 1 Active-low clocks selected. In idle state SCK is high.
2 CPHA	**SPI Clock Phase Bit** — This bit is used to select the SPI clock format. In master mode, a change of this bit will abort a transmission in progress and force the SPI system into idle state. 0 Sampling of data occurs at odd edges (1,3,5,...,15) of the SCK clock. 1 Sampling of data occurs at even edges (2,4,6,...,16) of the SCK clock.
1 SSOE	**Slave Select Output Enable** — The $\overline{SS}$ output feature is enabled only in master mode, if MODFEN is set, by asserting the SSOE as shown in Table 12-2. In master mode, a change of this bit will abort a transmission in progress and force the SPI system into idle state.
0 LSBFE	**LSB-First Enable** — This bit does not affect the position of the MSB and LSB in the data register. Reads and writes of the data register always have the MSB in bit 7. In master mode, a change of this bit will abort a transmission in progress and force the SPI system into idle state. 0 Data is transferred most significant bit first. 1 Data is transferred least significant bit first.

Table 12-2. $\overline{SS}$ Input / Output Selection

MODFEN	SSOE	Master Mode	Slave Mode
0	0	$\overline{SS}$ not used by SPI	$\overline{SS}$ input
0	1	$\overline{SS}$ not used by SPI	$\overline{SS}$ input
1	0	$\overline{SS}$ input with MODF feature	$\overline{SS}$ input
1	1	$\overline{SS}$ is slave select output	$\overline{SS}$ input

12.3.2.2 SPI Control Register 2 (SPICR2)

	7	6	5	4	3	2	1	0
R	0	0	0	MODFEN	BIDIROE	0	SPISWAI	SPC0
W								
Reset	0	0	0	0	0	0	0	0

= Unimplemented or Reserved

Figure 12-4. SPI Control Register 2 (SPICR2)

Read: Anytime

Write: Anytime; writes to the reserved bits have no effect

Table 12-3. SPICR2 Field Descriptions

Field	Description
4 MODFEN	**Mode Fault Enable Bit** — This bit allows the MODF failure to be detected. If the SPI is in master mode and MODFEN is cleared, then the $\overline{SS}$ port pin is not used by the SPI. In slave mode, the $\overline{SS}$ is available only as an input regardless of the value of MODFEN. For an overview on the impact of the MODFEN bit on the $\overline{SS}$ port pin configuration, refer to Table 12-4. In master mode, a change of this bit will abort a transmission in progress and force the SPI system into idle state. 0 $\overline{SS}$ port pin is not used by the SPI. 1 $\overline{SS}$ port pin with MODF feature.
3 BIDIROE	**Output Enable in the Bidirectional Mode of Operation** — This bit controls the MOSI and MISO output buffer of the SPI, when in bidirectional mode of operation (SPC0 is set). In master mode, this bit controls the output buffer of the MOSI port, in slave mode it controls the output buffer of the MISO port. In master mode, with SPC0 set, a change of this bit will abort a transmission in progress and force the SPI into idle state. 0 Output buffer disabled. 1 Output buffer enabled.
1 SPISWAI	**SPI Stop in Wait Mode Bit** — This bit is used for power conservation while in wait mode. 0 SPI clock operates normally in wait mode. 1 Stop SPI clock generation when in wait mode.
0 SPC0	**Serial Pin Control Bit 0** — This bit enables bidirectional pin configurations as shown in Table 12-4. In master mode, a change of this bit will abort a transmission in progress and force the SPI system into idle state.

Table 12-4. Bidirectional Pin Configurations

Pin Mode	SPC0	BIDIROE	MISO	MOSI
Master Mode of Operation				
Normal	0	X	Master In	Master Out
Bidirectional	1	0	MISO not used by SPI	Master In
		1		Master I/O
Slave Mode of Operation				
Normal	0	X	Slave Out	Slave In
Bidirectional	1	0	Slave In	MOSI not used by SPI
		1	Slave I/O	

12.3.2.3 SPI Baud Rate Register (SPIBR)

	7	6	5	4	3	2	1	0
R	0	SPPR2	SPPR1	SPPR0	0	SPR2	SPR1	SPR0
W								
Reset	0	0	0	0	0	0	0	0

= Unimplemented or Reserved

Figure 12-5. SPI Baud Rate Register (SPIBR)

Read: Anytime

Write: Anytime; writes to the reserved bits have no effect

Table 12-5. SPIBR Field Descriptions

Field	Description
6–4 SPPR[2:0]	**SPI Baud Rate Preselection Bits** — These bits specify the SPI baud rates as shown in Table 12-6. In master mode, a change of these bits will abort a transmission in progress and force the SPI system into idle state.
2–0 SPR[2:0]	**SPI Baud Rate Selection Bits** — These bits specify the SPI baud rates as shown in Table 12-6. In master mode, a change of these bits will abort a transmission in progress and force the SPI system into idle state.

The baud rate divisor equation is as follows:

$$\text{BaudRateDivisor} = (\text{SPPR} + 1) \bullet 2^{(\text{SPR} + 1)} \qquad \textit{Eqn. 12-1}$$

The baud rate can be calculated with the following equation:

$$\text{Baud Rate} = \text{BusClock} / \text{BaudRateDivisor} \qquad \textit{Eqn. 12-2}$$

NOTE

For maximum allowed baud rates, please refer to the SPI Electrical Specification in the Electricals chapter of this data sheet.

Table 12-6. Example SPI Baud Rate Selection (25 MHz Bus Clock)

SPPR2	SPPR1	SPPR0	SPR2	SPR1	SPR0	Baud Rate Divisor	Baud Rate
0	0	0	0	0	0	2	12.5 MHz
0	0	0	0	0	1	4	6.25 MHz
0	0	0	0	1	0	8	3.125 MHz
0	0	0	0	1	1	16	1.5625 MHz
0	0	0	1	0	0	32	781.25 kHz
0	0	0	1	0	1	64	390.63 kHz
0	0	0	1	1	0	128	195.31 kHz
0	0	0	1	1	1	256	97.66 kHz
0	0	1	0	0	0	4	6.25 MHz
0	0	1	0	0	1	8	3.125 MHz
0	0	1	0	1	0	16	1.5625 MHz
0	0	1	0	1	1	32	781.25 kHz
0	0	1	1	0	0	64	390.63 kHz
0	0	1	1	0	1	128	195.31 kHz
0	0	1	1	1	0	256	97.66 kHz
0	0	1	1	1	1	512	48.83 kHz
0	1	0	0	0	0	6	4.16667 MHz
0	1	0	0	0	1	12	2.08333 MHz
0	1	0	0	1	0	24	1.04167 MHz
0	1	0	0	1	1	48	520.83 kHz
0	1	0	1	0	0	96	260.42 kHz
0	1	0	1	0	1	192	130.21 kHz
0	1	0	1	1	0	384	65.10 kHz
0	1	0	1	1	1	768	32.55 kHz
0	1	1	0	0	0	8	3.125 MHz
0	1	1	0	0	1	16	1.5625 MHz
0	1	1	0	1	0	32	781.25 kHz
0	1	1	0	1	1	64	390.63 kHz
0	1	1	1	0	0	128	195.31 kHz
0	1	1	1	0	1	256	97.66 kHz
0	1	1	1	1	0	512	48.83 kHz
0	1	1	1	1	1	1024	24.41 kHz
1	0	0	0	0	0	10	2.5 MHz
1	0	0	0	0	1	20	1.25 MHz
1	0	0	0	1	0	40	625 kHz
1	0	0	0	1	1	80	312.5 kHz
1	0	0	1	0	0	160	156.25 kHz
1	0	0	1	0	1	320	78.13 kHz
1	0	0	1	1	0	640	39.06 kHz

Table 12-6. Example SPI Baud Rate Selection (25 MHz Bus Clock) (continued)

SPPR2	SPPR1	SPPR0	SPR2	SPR1	SPR0	Baud Rate Divisor	Baud Rate
1	0	0	1	1	1	1280	19.53 kHz
1	0	1	0	0	0	12	2.08333 MHz
1	0	1	0	0	1	24	1.04167 MHz
1	0	1	0	1	0	48	520.83 kHz
1	0	1	0	1	1	96	260.42 kHz
1	0	1	1	0	0	192	130.21 kHz
1	0	1	1	0	1	384	65.10 kHz
1	0	1	1	1	0	768	32.55 kHz
1	0	1	1	1	1	1536	16.28 kHz
1	1	0	0	0	0	14	1.78571 MHz
1	1	0	0	0	1	28	892.86 kHz
1	1	0	0	1	0	56	446.43 kHz
1	1	0	0	1	1	112	223.21 kHz
1	1	0	1	0	0	224	111.61 kHz
1	1	0	1	0	1	448	55.80 kHz
1	1	0	1	1	0	896	27.90 kHz
1	1	0	1	1	1	1792	13.95 kHz
1	1	1	0	0	0	16	1.5625 MHz
1	1	1	0	0	1	32	781.25 kHz
1	1	1	0	1	0	64	390.63 kHz
1	1	1	0	1	1	128	195.31 kHz
1	1	1	1	0	0	256	97.66 kHz
1	1	1	1	0	1	512	48.83 kHz
1	1	1	1	1	0	1024	24.41 kHz
1	1	1	1	1	1	2048	12.21 kHz

12.3.2.4 SPI Status Register (SPISR)

	7	6	5	4	3	2	1	0
R	SPIF	0	SPTEF	MODF	0	0	0	0
W								
Reset	0	0	1	0	0	0	0	0

= Unimplemented or Reserved

Figure 12-6. SPI Status Register (SPISR)

Read: Anytime

Write: Has no effect

Table 12-7. SPISR Field Descriptions

Field	Description
7 SPIF	**SPIF Interrupt Flag** — This bit is set after a received data byte has been transferred into the SPI data register. This bit is cleared by reading the SPISR register (with SPIF set) followed by a read access to the SPI data register. 0 Transfer not yet complete. 1 New data copied to SPIDR.
5 SPTEF	**SPI Transmit Empty Interrupt Flag** — If set, this bit indicates that the transmit data register is empty. To clear this bit and place data into the transmit data register, SPISR must be read with SPTEF = 1, followed by a write to SPIDR. Any write to the SPI data register without reading SPTEF = 1, is effectively ignored. 0 SPI data register not empty. 1 SPI data register empty.
4 MODF	**Mode Fault Flag** — This bit is set if the $\overline{SS}$ input becomes low while the SPI is configured as a master and mode fault detection is enabled, MODFEN bit of SPICR2 register is set. Refer to MODFEN bit description in Section 12.3.2.2, “SPI Control Register 2 (SPICR2)”. The flag is cleared automatically by a read of the SPI status register (with MODF set) followed by a write to the SPI control register 1. 0 Mode fault has not occurred. 1 Mode fault has occurred.

12.3.2.5 SPI Data Register (SPIDR)

	7	6	5	4	3	2	1	0
R W	Bit 7	6	5	4	3	2	2	Bit 0
Reset	0	0	0	0	0	0	0	0

Figure 12-7. SPI Data Register (SPIDR)

Read: Anytime; normally read only when SPIF is set

Write: Anytime

The SPI data register is both the input and output register for SPI data. A write to this register allows a data byte to be queued and transmitted. For an SPI configured as a master, a queued data byte is transmitted immediately after the previous transmission has completed. The SPI transmitter empty flag SPTEF in the SPISR register indicates when the SPI data register is ready to accept new data.

Received data in the SPIDR is valid when SPIF is set.

If SPIF is cleared and a byte has been received, the received byte is transferred from the receive shift register to the SPIDR and SPIF is set.

If SPIF is set and not serviced, and a second byte has been received, the second received byte is kept as valid byte in the receive shift register until the start of another transmission. The byte in the SPIDR does not change.

If SPIF is set and a valid byte is in the receive shift register, and SPIF is serviced before the start of a third transmission, the byte in the receive shift register is transferred into the SPIDR and SPIF remains set (see Figure 12-8).

If SPIF is set and a valid byte is in the receive shift register, and SPIF is serviced after the start of a third transmission, the byte in the receive shift register has become invalid and is not transferred into the SPIDR (see Figure 12-9).

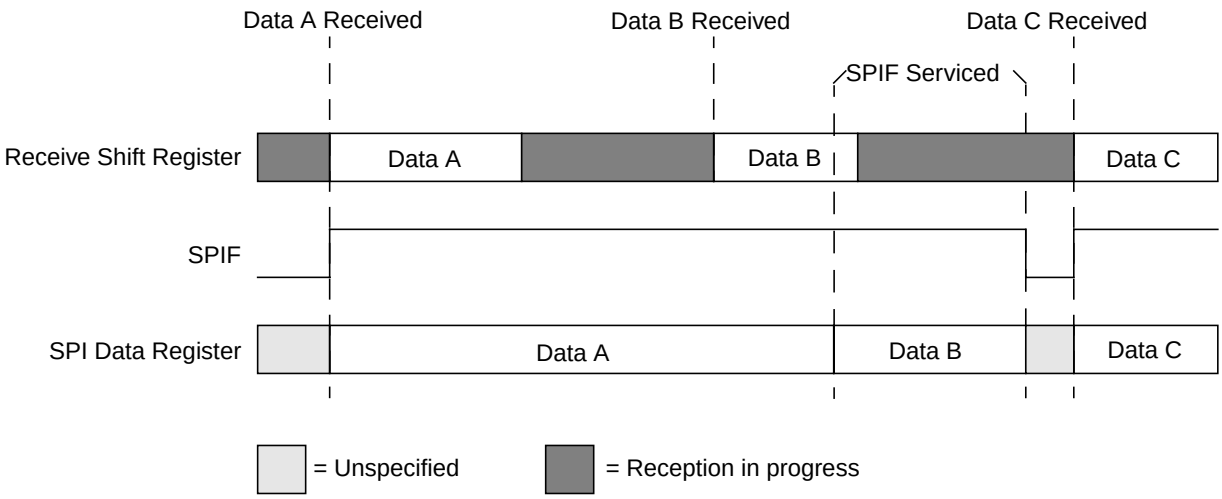

Figure 12-8. Reception with SPIF Serviced in Time

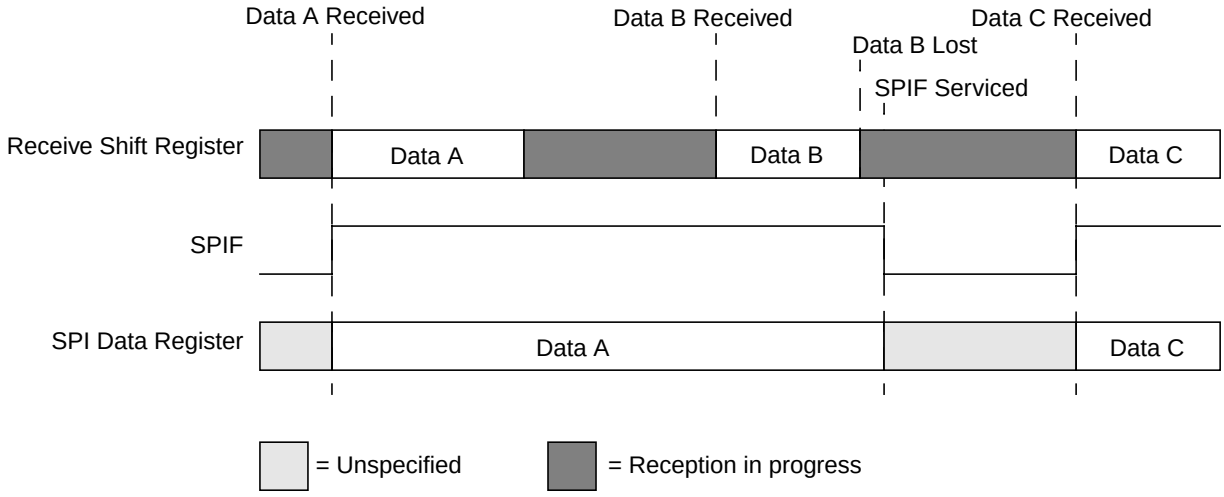

Figure 12-9. Reception with SPIF Serviced too Late

12.4 Functional Description

The SPI module allows a duplex, synchronous, serial communication between the MCU and peripheral devices. Software can poll the SPI status flags or SPI operation can be interrupt driven.

The SPI system is enabled by setting the SPI enable (SPE) bit in SPI control register 1. While SPE is set, the four associated SPI port pins are dedicated to the SPI function as:

- Slave select ($\overline{SS}$)
- Serial clock (SCK)
- Master out/slave in (MOSI)
- Master in/slave out (MISO)

The main element of the SPI system is the SPI data register. The 8-bit data register in the master and the 8-bit data register in the slave are linked by the MOSI and MISO pins to form a distributed 16-bit register. When a data transfer operation is performed, this 16-bit register is serially shifted eight bit positions by the S-clock from the master, so data is exchanged between the master and the slave. Data written to the master SPI data register becomes the output data for the slave, and data read from the master SPI data register after a transfer operation is the input data from the slave.

A read of SPISR with SPTEF = 1 followed by a write to SPIDR puts data into the transmit data register. When a transfer is complete and SPIF is cleared, received data is moved into the receive data register. This 8-bit data register acts as the SPI receive data register for reads and as the SPI transmit data register for writes. A single SPI register address is used for reading data from the read data buffer and for writing data to the transmit data register.

The clock phase control bit (CPHA) and a clock polarity control bit (CPOL) in the SPI control register 1 (SPICR1) select one of four possible clock formats to be used by the SPI system. The CPOL bit simply selects a non-inverted or inverted clock. The CPHA bit is used to accommodate two fundamentally different protocols by sampling data on odd numbered SCK edges or on even numbered SCK edges (see Section 12.4.3, “Transmission Formats”).

The SPI can be configured to operate as a master or as a slave. When the MSTR bit in SPI control register1 is set, master mode is selected, when the MSTR bit is clear, slave mode is selected.

NOTE

A change of CPOL or MSTR bit while there is a received byte pending in the receive shift register will destroy the received byte and must be avoided.

12.4.1 Master Mode

The SPI operates in master mode when the MSTR bit is set. Only a master SPI module can initiate transmissions. A transmission begins by writing to the master SPI data register. If the shift register is empty, the byte immediately transfers to the shift register. The byte begins shifting out on the MOSI pin under the control of the serial clock.

- Serial clock

  The SPR2, SPR1, and SPR0 baud rate selection bits, in conjunction with the SPPR2, SPPR1, and SPPR0 baud rate preselection bits in the SPI baud rate register, control the baud rate generator and determine the speed of the transmission. The SCK pin is the SPI clock output. Through the SCK pin, the baud rate generator of the master controls the shift register of the slave peripheral.

- MOSI, MISO pin

  In master mode, the function of the serial data output pin (MOSI) and the serial data input pin (MISO) is determined by the SPC0 and BIDIROE control bits.

- $\overline{SS}$ pin

  If MODFEN and SSOE are set, the $\overline{SS}$ pin is configured as slave select output. The $\overline{SS}$ output becomes low during each transmission and is high when the SPI is in idle state.

  If MODFEN is set and SSOE is cleared, the $\overline{SS}$ pin is configured as input for detecting mode fault error. If the $\overline{SS}$ input becomes low this indicates a mode fault error where another master tries to drive the MOSI and SCK lines. In this case, the SPI immediately switches to slave mode, by clearing the MSTR bit and also disables the slave output buffer MISO (or SISO in bidirectional mode). So the result is that all outputs are disabled and SCK, MOSI, and MISO are inputs. If a transmission is in progress when the mode fault occurs, the transmission is aborted and the SPI is forced into idle state.

  This mode fault error also sets the mode fault (MODF) flag in the SPI status register (SPISR). If the SPI interrupt enable bit (SPIE) is set when the MODF flag becomes set, then an SPI interrupt sequence is also requested.

  When a write to the SPI data register in the master occurs, there is a half SCK-cycle delay. After the delay, SCK is started within the master. The rest of the transfer operation differs slightly, depending on the clock format specified by the SPI clock phase bit, CPHA, in SPI control register 1 (see Section 12.4.3, “Transmission Formats”).

NOTE

A change of the bits CPOL, CPHA, SSOE, LSBFE, MODFEN, SPC0, or BIDIROE with SPC0 set, SPPR2-SPPR0 and SPR2-SPR0 in master mode will abort a transmission in progress and force the SPI into idle state. The remote slave cannot detect this, therefore the master must ensure that the remote slave is returned to idle state.

12.4.2 Slave Mode

The SPI operates in slave mode when the MSTR bit in SPI control register 1 is clear.

- Serial clock

  In slave mode, SCK is the SPI clock input from the master.
- MISO, MOSI pin

  In slave mode, the function of the serial data output pin (MISO) and serial data input pin (MOSI) is determined by the SPC0 bit and BIDIROE bit in SPI control register 2.
- $\overline{SS}$ pin

  The $\overline{SS}$ pin is the slave select input. Before a data transmission occurs, the $\overline{SS}$ pin of the slave SPI must be low. $\overline{SS}$ must remain low until the transmission is complete. If $\overline{SS}$ goes high, the SPI is forced into idle state.

  The $\overline{SS}$ input also controls the serial data output pin, if $\overline{SS}$ is high (not selected), the serial data output pin is high impedance, and, if $\overline{SS}$ is low, the first bit in the SPI data register is driven out of the serial data output pin. Also, if the slave is not selected ($\overline{SS}$ is high), then the SCK input is ignored and no internal shifting of the SPI shift register occurs.

  Although the SPI is capable of duplex operation, some SPI peripherals are capable of only receiving SPI data in a slave mode. For these simpler devices, there is no serial data out pin.

NOTE

When peripherals with duplex capability are used, take care not to simultaneously enable two receivers whose serial outputs drive the same system slave's serial data output line.

As long as no more than one slave device drives the system slave's serial data output line, it is possible for several slaves to receive the same transmission from a master, although the master would not receive return information from all of the receiving slaves.

If the CPHA bit in SPI control register 1 is clear, odd numbered edges on the SCK input cause the data at the serial data input pin to be latched. Even numbered edges cause the value previously latched from the serial data input pin to shift into the LSB or MSB of the SPI shift register, depending on the LSBFE bit.

If the CPHA bit is set, even numbered edges on the SCK input cause the data at the serial data input pin to be latched. Odd numbered edges cause the value previously latched from the serial data input pin to shift into the LSB or MSB of the SPI shift register, depending on the LSBFE bit.

When CPHA is set, the first edge is used to get the first data bit onto the serial data output pin. When CPHA is clear and the $\overline{SS}$ input is low (slave selected), the first bit of the SPI data is driven out of the serial data output pin. After the eighth shift, the transfer is considered complete and the received data is transferred into the SPI data register. To indicate transfer is complete, the SPIF flag in the SPI status register is set.

NOTE

A change of the bits CPOL, CPHA, SSOE, LSBFE, MODFEN, SPC0, or BIDIROE with SPC0 set in slave mode will corrupt a transmission in progress and must be avoided.

12.4.3 Transmission Formats

During an SPI transmission, data is transmitted (shifted out serially) and received (shifted in serially) simultaneously. The serial clock (SCK) synchronizes shifting and sampling of the information on the two serial data lines. A slave select line allows selection of an individual slave SPI device; slave devices that are not selected do not interfere with SPI bus activities. Optionally, on a master SPI device, the slave select line can be used to indicate multiple-master bus contention.

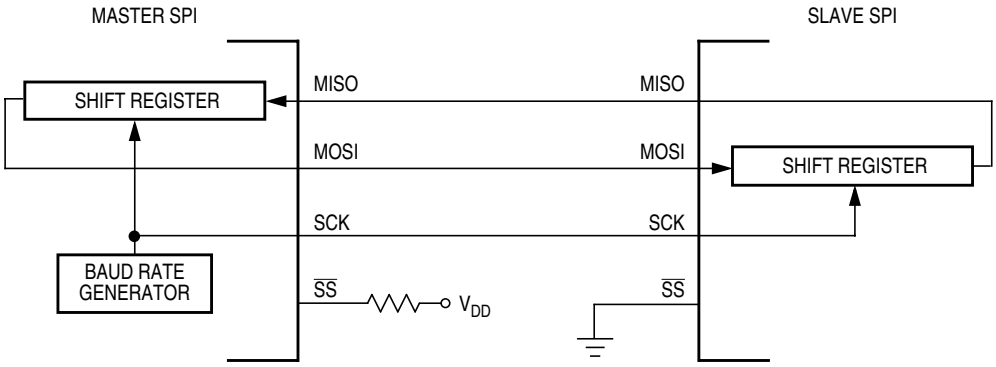

Figure 12-10. Master/Slave Transfer Block Diagram

12.4.3.1 Clock Phase and Polarity Controls

Using two bits in the SPI control register 1, software selects one of four combinations of serial clock phase and polarity.

The CPOL clock polarity control bit specifies an active high or low clock and has no significant effect on the transmission format.

The CPHA clock phase control bit selects one of two fundamentally different transmission formats.

Clock phase and polarity should be identical for the master SPI device and the communicating slave device. In some cases, the phase and polarity are changed between transmissions to allow a master device to communicate with peripheral slaves having different requirements.

12.4.3.2 CPHA = 0 Transfer Format

The first edge on the SCK line is used to clock the first data bit of the slave into the master and the first data bit of the master into the slave. In some peripherals, the first bit of the slave's data is available at the slave's data out pin as soon as the slave is selected. In this format, the first SCK edge is issued a half cycle after $\overline{SS}$ has become low.

A half SCK cycle later, the second edge appears on the SCK line. When this second edge occurs, the value previously latched from the serial data input pin is shifted into the LSB or MSB of the shift register, depending on LSBFE bit.

After this second edge, the next bit of the SPI master data is transmitted out of the serial data output pin of the master to the serial input pin on the slave. This process continues for a total of 16 edges on the SCK line, with data being latched on odd numbered edges and shifted on even numbered edges.

Data reception is double buffered. Data is shifted serially into the SPI shift register during the transfer and is transferred to the parallel SPI data register after the last bit is shifted in.

After the 16th (last) SCK edge:

- Data that was previously in the master SPI data register should now be in the slave data register and the data that was in the slave data register should be in the master.
- The SPIF flag in the SPI status register is set, indicating that the transfer is complete.

Figure 12-11 is a timing diagram of an SPI transfer where CPHA = 0. SCK waveforms are shown for CPOL = 0 and CPOL = 1. The diagram may be interpreted as a master or slave timing diagram because the SCK, MISO, and MOSI pins are connected directly between the master and the slave. The MISO signal is the output from the slave and the MOSI signal is the output from the master. The $\overline{SS}$ pin of the master must be either high or reconfigured as a general-purpose output not affecting the SPI.

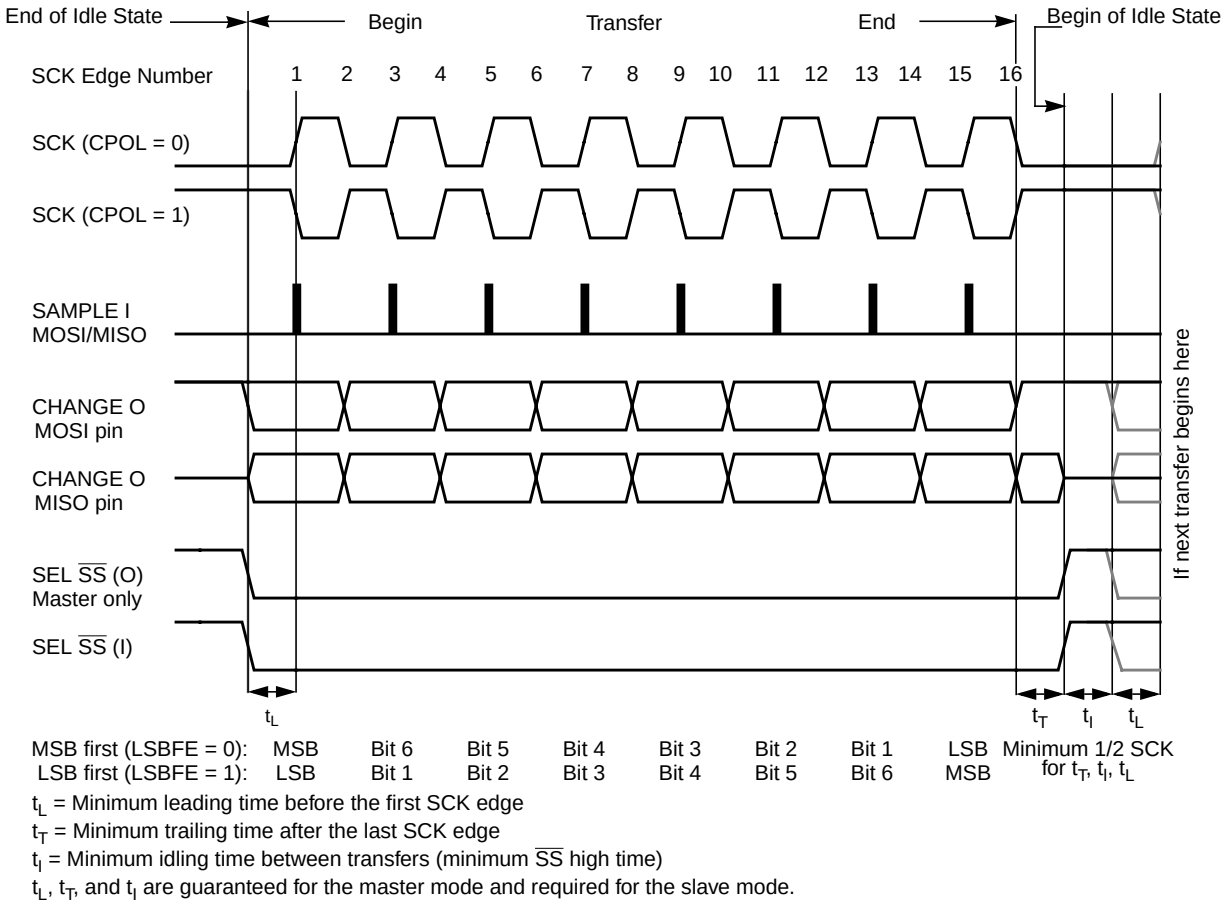

t_L = Minimum leading time before the first SCK edge
t_T = Minimum trailing time after the last SCK edge
t_I = Minimum idling time between transfers (minimum $\overline{SS}$ high time)
t_L, t_T, and t_I are guaranteed for the master mode and required for the slave mode.

Figure 12-11. SPI Clock Format 0 (CPHA = 0)

In slave mode, if the $\overline{SS}$ line is not deasserted between the successive transmissions then the content of the SPI data register is not transmitted; instead the last received byte is transmitted. If the $\overline{SS}$ line is deasserted for at least minimum idle time (half SCK cycle) between successive transmissions, then the content of the SPI data register is transmitted.

In master mode, with slave select output enabled the $\overline{SS}$ line is always deasserted and reasserted between successive transfers for at least minimum idle time.

12.4.3.3 CPHA = 1 Transfer Format

Some peripherals require the first SCK edge before the first data bit becomes available at the data out pin, the second edge clocks data into the system. In this format, the first SCK edge is issued by setting the CPHA bit at the beginning of the 8-cycle transfer operation.

The first edge of SCK occurs immediately after the half SCK clock cycle synchronization delay. This first edge commands the slave to transfer its first data bit to the serial data input pin of the master.

A half SCK cycle later, the second edge appears on the SCK pin. This is the latching edge for both the master and slave.

When the third edge occurs, the value previously latched from the serial data input pin is shifted into the LSB or MSB of the SPI shift register, depending on LSBFE bit. After this edge, the next bit of the master data is coupled out of the serial data output pin of the master to the serial input pin on the slave.

This process continues for a total of 16 edges on the SCK line with data being latched on even numbered edges and shifting taking place on odd numbered edges.

Data reception is double buffered, data is serially shifted into the SPI shift register during the transfer and is transferred to the parallel SPI data register after the last bit is shifted in.

After the 16th SCK edge:

- Data that was previously in the SPI data register of the master is now in the data register of the slave, and data that was in the data register of the slave is in the master.
- The SPIF flag bit in SPISR is set indicating that the transfer is complete.

Figure 12-12 shows two clocking variations for CPHA = 1. The diagram may be interpreted as a master or slave timing diagram because the SCK, MISO, and MOSI pins are connected directly between the master and the slave. The MISO signal is the output from the slave, and the MOSI signal is the output from the master. The $\overline{SS}$ line is the slave select input to the slave. The $\overline{SS}$ pin of the master must be either high or reconfigured as a general-purpose output not affecting the SPI.

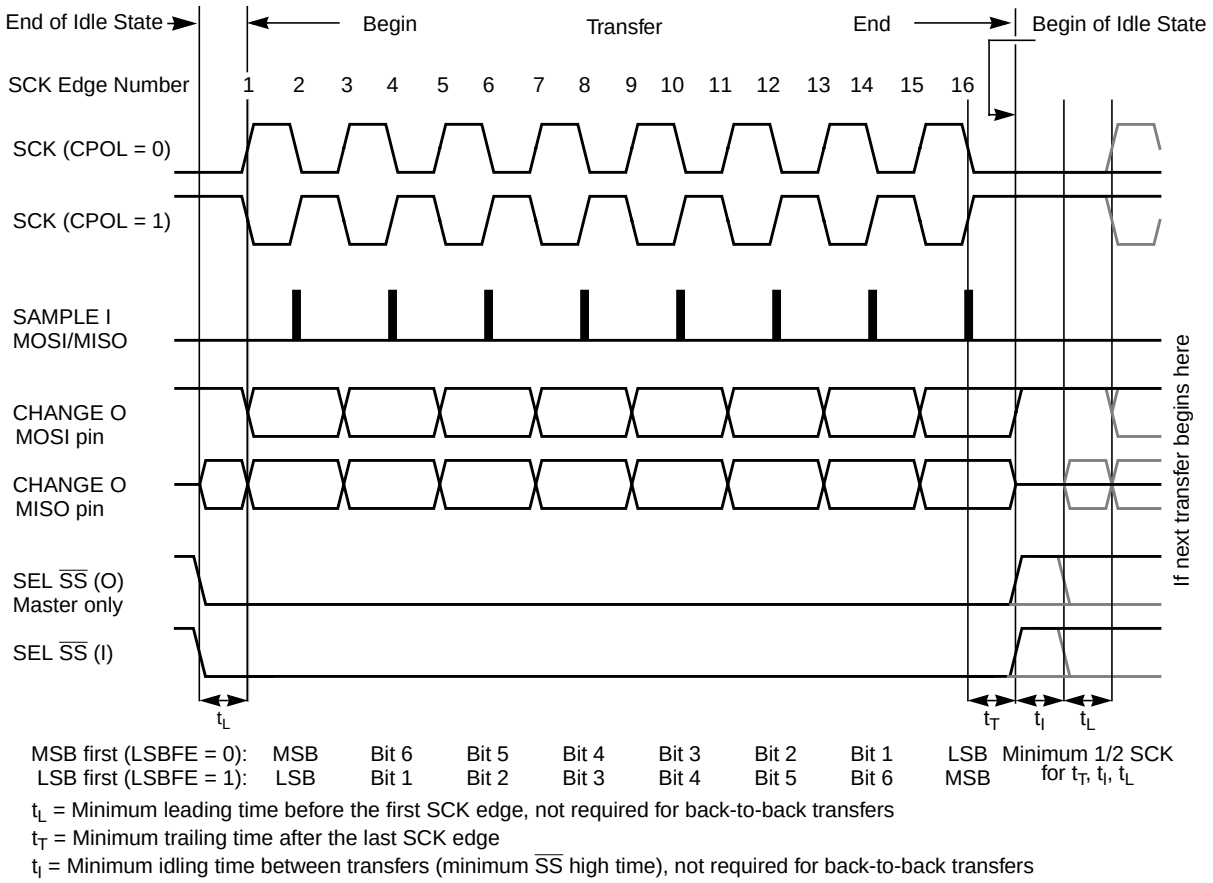

Figure 12-12. SPI Clock Format 1 (CPHA = 1)

The $\overline{SS}$ line can remain active low between successive transfers (can be tied low at all times). This format is sometimes preferred in systems having a single fixed master and a single slave that drive the MISO data line.

- Back-to-back transfers in master mode

  In master mode, if a transmission has completed and a new data byte is available in the SPI data register, this byte is sent out immediately without a trailing and minimum idle time.

The SPI interrupt request flag (SPIF) is common to both the master and slave modes. SPIF gets set one half SCK cycle after the last SCK edge.

12.4.4 SPI Baud Rate Generation

Baud rate generation consists of a series of divider stages. Six bits in the SPI baud rate register (SPPR2, SPPR1, SPPR0, SPR2, SPR1, and SPR0) determine the divisor to the SPI module clock which results in the SPI baud rate.

The SPI clock rate is determined by the product of the value in the baud rate preselection bits (SPPR2–SPPR0) and the value in the baud rate selection bits (SPR2–SPR0). The module clock divisor equation is shown in Equation 12-3.

$$\text{BaudRateDivisor} = (\text{SPPR} + 1) \bullet 2^{(\text{SPR} + 1)} \qquad \textit{Eqn. 12-3}$$

When all bits are clear (the default condition), the SPI module clock is divided by 2. When the selection bits (SPR2–SPR0) are 001 and the preselection bits (SPPR2–SPPR0) are 000, the module clock divisor becomes 4. When the selection bits are 010, the module clock divisor becomes 8, etc.

When the preselection bits are 001, the divisor determined by the selection bits is multiplied by 2. When the preselection bits are 010, the divisor is multiplied by 3, etc. See Table 12-6 for baud rate calculations for all bit conditions, based on a 25 MHz bus clock. The two sets of selects allows the clock to be divided by a non-power of two to achieve other baud rates such as divide by 6, divide by 10, etc.

The baud rate generator is activated only when the SPI is in master mode and a serial transfer is taking place. In the other cases, the divider is disabled to decrease I_{DD} current.

NOTE

For maximum allowed baud rates, please refer to the SPI Electrical Specification in the Electricals chapter of this data sheet.

12.4.5 Special Features

12.4.5.1 $\overline{SS}$ Output

The $\overline{SS}$ output feature automatically drives the $\overline{SS}$ pin low during transmission to select external devices and drives it high during idle to deselect external devices. When $\overline{SS}$ output is selected, the $\overline{SS}$ output pin is connected to the $\overline{SS}$ input pin of the external device.

The $\overline{SS}$ output is available only in master mode during normal SPI operation by asserting SSOE and MODFEN bit as shown in Table 12-2.

The mode fault feature is disabled while $\overline{SS}$ output is enabled.

NOTE

Care must be taken when using the $\overline{SS}$ output feature in a multimaster system because the mode fault feature is not available for detecting system errors between masters.

12.4.5.2 Bidirectional Mode (MOMI or SISO)

The bidirectional mode is selected when the SPC0 bit is set in SPI control register 2 (see Table 12-8). In this mode, the SPI uses only one serial data pin for the interface with external device(s). The MSTR bit decides which pin to use. The MOSI pin becomes the serial data I/O (MOMI) pin for the master mode, and the MISO pin becomes serial data I/O (SISO) pin for the slave mode. The MISO pin in master mode and MOSI pin in slave mode are not used by the SPI.

Table 12-8. Normal Mode and Bidirectional Mode

When SPE = 1	Master Mode MSTR = 1	Slave Mode MSTR = 0
Normal Mode SPC0 = 0	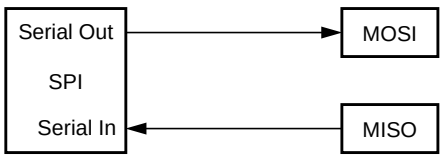	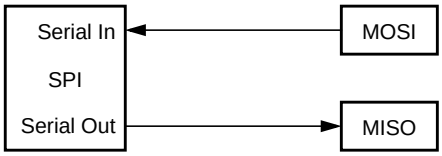
Bidirectional Mode SPC0 = 1	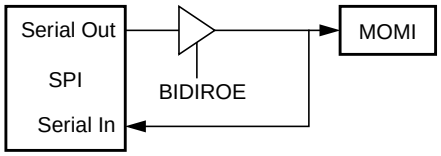	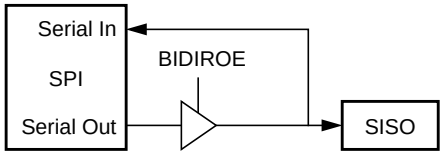

The direction of each serial I/O pin depends on the BIDIROE bit. If the pin is configured as an output, serial data from the shift register is driven out on the pin. The same pin is also the serial input to the shift register.

- The SCK is output for the master mode and input for the slave mode.
- The $\overline{SS}$ is the input or output for the master mode, and it is always the input for the slave mode.
- The bidirectional mode does not affect SCK and $\overline{SS}$ functions.

NOTE

In bidirectional master mode, with mode fault enabled, both data pins MISO and MOSI can be occupied by the SPI, though MOSI is normally used for transmissions in bidirectional mode and MISO is not used by the SPI. If a mode fault occurs, the SPI is automatically switched to slave mode. In this case MISO becomes occupied by the SPI and MOSI is not used. This must be considered, if the MISO pin is used for another purpose.

12.4.6 Error Conditions

The SPI has one error condition:

- Mode fault error

12.4.6.1 Mode Fault Error

If the $\overline{SS}$ input becomes low while the SPI is configured as a master, it indicates a system error where more than one master may be trying to drive the MOSI and SCK lines simultaneously. This condition is not permitted in normal operation, the MODF bit in the SPI status register is set automatically, provided the MODFEN bit is set.

In the special case where the SPI is in master mode and MODFEN bit is cleared, the $\overline{SS}$ pin is not used by the SPI. In this special case, the mode fault error function is inhibited and MODF remains cleared. In case the SPI system is configured as a slave, the $\overline{SS}$ pin is a dedicated input pin. Mode fault error doesn't occur in slave mode.

If a mode fault error occurs, the SPI is switched to slave mode, with the exception that the slave output buffer is disabled. So SCK, MISO, and MOSI pins are forced to be high impedance inputs to avoid any possibility of conflict with another output driver. A transmission in progress is aborted and the SPI is forced into idle state.

If the mode fault error occurs in the bidirectional mode for a SPI system configured in master mode, output enable of the MOMI (MOSI in bidirectional mode) is cleared if it was set. No mode fault error occurs in the bidirectional mode for SPI system configured in slave mode.

The mode fault flag is cleared automatically by a read of the SPI status register (with MODF set) followed by a write to SPI control register 1. If the mode fault flag is cleared, the SPI becomes a normal master or slave again.

NOTE

If a mode fault error occurs and a received data byte is pending in the receive shift register, this data byte will be lost.

12.4.7 Low Power Mode Options

12.4.7.1 SPI in Run Mode

In run mode with the SPI system enable (SPE) bit in the SPI control register clear, the SPI system is in a low-power, disabled state. SPI registers remain accessible, but clocks to the core of this module are disabled.

12.4.7.2 SPI in Wait Mode

SPI operation in wait mode depends upon the state of the SPISWAI bit in SPI control register 2.

- If SPISWAI is clear, the SPI operates normally when the CPU is in wait mode
- If SPISWAI is set, SPI clock generation ceases and the SPI module enters a power conservation state when the CPU is in wait mode.
  - If SPISWAI is set and the SPI is configured for master, any transmission and reception in progress stops at wait mode entry. The transmission and reception resumes when the SPI exits wait mode.
  - If SPISWAI is set and the SPI is configured as a slave, any transmission and reception in progress continues if the SCK continues to be driven from the master. This keeps the slave synchronized to the master and the SCK.

    If the master transmits several bytes while the slave is in wait mode, the slave will continue to send out bytes consistent with the operation mode at the start of wait mode (i.e., if the slave is currently sending its SPIDR to the master, it will continue to send the same byte. Else if the slave is currently sending the last received byte from the master, it will continue to send each previous master byte).

NOTE

Care must be taken when expecting data from a master while the slave is in wait or stop mode. Even though the shift register will continue to operate, the rest of the SPI is shut down (i.e., a SPIF interrupt will **not** be generated until exiting stop or wait mode). Also, the byte from the shift register will not be copied into the SPIDR register until after the slave SPI has exited wait or stop mode. In slave mode, a received byte pending in the receive shift register will be lost when entering wait or stop mode. An SPIF flag and SPIDR copy is generated only if wait mode is entered or exited during a tranmission. If the slave enters wait mode in idle mode and exits wait mode in idle mode, neither a SPIF nor a SPIDR copy will occur.

12.4.7.3 SPI in Stop Mode

Stop mode is dependent on the system. The SPI enters stop mode when the module clock is disabled (held high or low). If the SPI is in master mode and exchanging data when the CPU enters stop mode, the transmission is frozen until the CPU exits stop mode. After stop, data to and from the external SPI is exchanged correctly. In slave mode, the SPI will stay synchronized with the master.

The stop mode is not dependent on the SPISWAI bit.

12.4.7.4 Reset

The reset values of registers and signals are described in Section 12.3, “Memory Map and Register Definition”, which details the registers and their bit fields.

- If a data transmission occurs in slave mode after reset without a write to SPIDR, it will transmit garbage, or the byte last received from the master before the reset.
- Reading from the SPIDR after reset will always read a byte of zeros.

12.4.7.5 Interrupts

The SPI only originates interrupt requests when SPI is enabled (SPE bit in SPICR1 set). The following is a description of how the SPI makes a request and how the MCU should acknowledge that request. The interrupt vector offset and interrupt priority are chip dependent.

The interrupt flags MODF, SPIF, and SPTEF are logically ORed to generate an interrupt request.

12.4.7.5.1 MODF

MODF occurs when the master detects an error on the $\overline{SS}$ pin. The master SPI must be configured for the MODF feature (see Table 12-2). After MODF is set, the current transfer is aborted and the following bit is changed:

- MSTR = 0, The master bit in SPICR1 resets.

The MODF interrupt is reflected in the status register MODF flag. Clearing the flag will also clear the interrupt. This interrupt will stay active while the MODF flag is set. MODF has an automatic clearing process which is described in Section 12.3.2.4, “SPI Status Register (SPISR)”.

12.4.7.5.2 SPIF

SPIF occurs when new data has been received and copied to the SPI data register. After SPIF is set, it does not clear until it is serviced. SPIF has an automatic clearing process, which is described in Section 12.3.2.4, “SPI Status Register (SPISR)”.

12.4.7.5.3 SPTEF

SPTEF occurs when the SPI data register is ready to accept new data. After SPTEF is set, it does not clear until it is serviced. SPTEF has an automatic clearing process, which is described in Section 12.3.2.4, “SPI Status Register (SPISR)”.

Chapter 13
Periodic Interrupt Timer (S12PIT24B4CV1)

13.1 Introduction

The period interrupt timer (PIT) is an array of 24-bit timers that can be used to trigger peripheral modules or raise periodic interrupts. Refer to Figure 13-1 for a simplified block diagram.

13.1.1 Glossary

Acronyms and Abbreviations	
PIT	Periodic Interrupt Timer
ISR	Interrupt Service Routine
CCR	Condition Code Register
SoC	System on Chip
micro time bases	clock periods of the 16-bit timer modulus down-counters, which are generated by the 8-bit modulus down-counters.

13.1.2 Features

The PIT includes these features:

- Four timers implemented as modulus down-counters with independent time-out periods.
- Time-out periods selectable between 1 and 2^{24} bus clock cycles. Time-out equals m*n bus clock cycles with 1 <= m <= 256 and 1 <= n <= 65536.
- Timers that can be enabled individually.
- Four time-out interrupts.
- Four time-out trigger output signals available to trigger peripheral modules.
- Start of timer channels can be aligned to each other.

13.1.3 Modes of Operation

Refer to the SoC guide for a detailed explanation of the chip modes.

- Run mode

  This is the basic mode of operation.
- Wait mode

PIT operation in wait mode is controlled by the PITSWAI bit located in the PITCFLMT register. In wait mode, if the bus clock is globally enabled and if the PITSWAI bit is clear, the PIT operates like in run mode. In wait mode, if the PITSWAI bit is set, the PIT module is stalled.

- Stop mode

  In full stop mode or pseudo stop mode, the PIT module is stalled.

- Freeze mode

  PIT operation in freeze mode is controlled by the PITFRZ bit located in the PITCFLMT register. In freeze mode, if the PITFRZ bit is clear, the PIT operates like in run mode. In freeze mode, if the PITFRZ bit is set, the PIT module is stalled.

13.1.4 Block Diagram

Figure 13-1 shows a block diagram of the PIT.

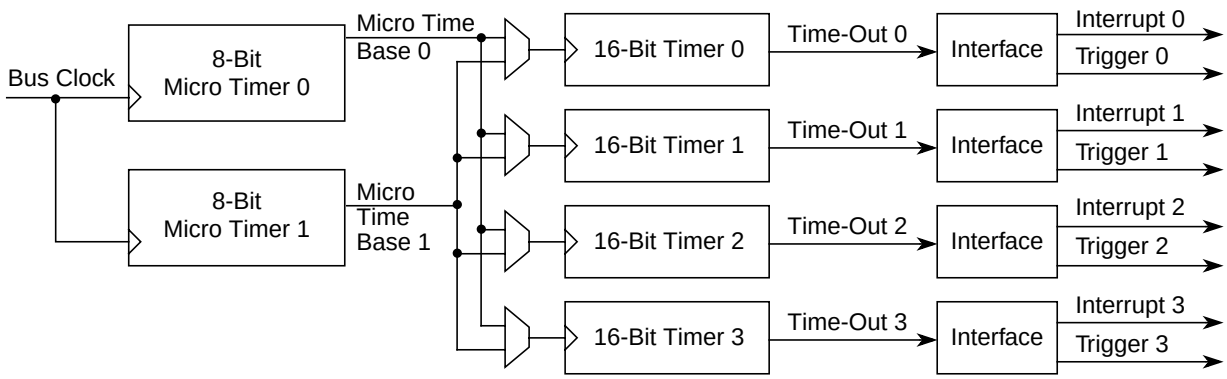

Figure 13-1. PIT Block Diagram

13.2 External Signal Description

The PIT module has no external pins.

13.3 Memory Map and Register Definition

This section consists of register descriptions in address order. Each description includes a standard register diagram with an associated figure number. Details of register bit and field function follow the register diagrams, in bit order.

Register Name		Bit 7	6	5	4	3	2	1	Bit 0
PITCFLMT	R	PITE	PITSWAI	PITFRZ	0	0	0	0	0
	W							PFLMT1	PFLMT0
PITFLT	R	0	0	0	0	0	0	0	0
	W					PFLT3	PFLT2	PFLT1	PFLT0
PITCE	R	0	0	0	0	PCE3	PCE2	PCE1	PCE0
	W								
PITMUX	R	0	0	0	0	PMUX3	PMUX2	PMUX1	PMUX0
	W								
PITINTE	R	0	0	0	0	PINTE3	PINTE2	PINTE1	PINTE0
	W								
PITTF	R	0	0	0	0	PTF3	PTF2	PTF1	PTF0
	W								
PITMTLD0	R	PMTLD7	PMTLD6	PMTLD5	PMTLD4	PMTLD3	PMTLD2	PMTLD1	PMTLD0
	W								
PITMTLD1	R	PMTLD7	PMTLD6	PMTLD5	PMTLD4	PMTLD3	PMTLD2	PMTLD1	PMTLD0
	W								
PITLD0 (High)	R	PLD15	PLD14	PLD13	PLD12	PLD11	PLD10	PLD9	PLD8
	W								
PITLD0 (Low)	R	PLD7	PLD6	PLD5	PLD4	PLD3	PLD2	PLD1	PLD0
	W								
PITCNT0 (High)	R	PCNT15	PCNT14	PCNT13	PCNT12	PCNT11	PCNT10	PCNT9	PCNT8
	W								
PITCNT0 (Low)	R	PCNT7	PCNT6	PCNT5	PCNT4	PCNT3	PCNT2	PCNT1	PCNT0
	W								
PITLD1 (High)	R	PLD15	PLD14	PLD13	PLD12	PLD11	PLD10	PLD9	PLD8
	W								

= Unimplemented or Reserved

Figure 13-2. PIT Register Summary (Sheet 1 of 2)

Register Name		Bit 7	6	5	4	3	2	1	Bit 0
PITLD1 (Low)	R/W	PLD7	PLD6	PLD5	PLD4	PLD3	PLD2	PLD1	PLD0
PITCNT1 (High)	R/W	PCNT15	PCNT14	PCNT13	PCNT12	PCNT11	PCNT10	PCNT9	PCNT8
PITCNT1 (Low)	R/W	PCNT7	PCNT6	PCNT5	PCNT4	PCNT3	PCNT2	PCNT1	PCNT0
PITLD2 (High)	R/W	PLD15	PLD14	PLD13	PLD12	PLD11	PLD10	PLD9	PLD8
PITLD2 (Low)	R/W	PLD7	PLD6	PLD5	PLD4	PLD3	PLD2	PLD1	PLD0
PITCNT2 (High)	R/W	PCNT15	PCNT14	PCNT13	PCNT12	PCNT11	PCNT10	PCNT9	PCNT8
PITCNT2 (Low)	R/W	PCNT7	PCNT6	PCNT5	PCNT4	PCNT3	PCNT2	PCNT1	PCNT0
PITLD3 (High)	R/W	PLD15	PLD14	PLD13	PLD12	PLD11	PLD10	PLD9	PLD8
PITLD3 (Low)	R/W	PLD7	PLD6	PLD5	PLD4	PLD3	PLD2	PLD1	PLD0
PITCNT3 (High)	R/W	PCNT15	PCNT14	PCNT13	PCNT12	PCNT11	PCNT10	PCNT9	PCNT8
PITCNT3 (Low)	R/W	PCNT7	PCNT6	PCNT5	PCNT4	PCNT3	PCNT2	PCNT1	PCNT0

= Unimplemented or Reserved

Figure 13-2. PIT Register Summary (Sheet 2 of 2)

13.3.0.1 PIT Control and Force Load Micro Timer Register (PITCFLMT)

	7	6	5	4	3	2	1	0
R	PITE	PITSWAI	PITFRZ	0	0	0	0	0
W							PFLMT1	PFLMT0
Reset	0	0	0	0	0	0	0	0

= Unimplemented or Reserved

Figure 13-3. PIT Control and Force Load Micro Timer Register (PITCFLMT)

Read: Anytime

Write: Anytime; writes to the reserved bits have no effect

Table 13-1. PITCFLMT Field Descriptions

Field	Description
7 PITE	**PIT Module Enable Bit** — This bit enables the PIT module. If PITE is cleared, the PIT module is disabled and flag bits in the PITTF register are cleared. When PITE is set, individually enabled timers (PCE set) start down-counting with the corresponding load register values. 0 PIT disabled (lower power consumption). 1 PIT is enabled.
6 PITSWAI	**PIT Stop in Wait Mode Bit** — This bit is used for power conservation while in wait mode. 0 PIT operates normally in wait mode 1 PIT clock generation stops and freezes the PIT module when in wait mode
5 PITFRZ	**PIT Counter Freeze while in Freeze Mode Bit** — When during debugging a breakpoint (freeze mode) is encountered it is useful in many cases to freeze the PIT counters to avoid e.g. interrupt generation. The PITFRZ bit controls the PIT operation while in freeze mode. 0 PIT operates normally in freeze mode 1 PIT counters are stalled when in freeze mode
1:0 PFLMT[1:0]	**PIT Force Load Bits for Micro Timer 1:0** — These bits have only an effect if the corresponding micro timer is active and if the PIT module is enabled (PITE set). Writing a one into a PFLMT bit loads the corresponding 8-bit micro timer load register into the 8-bit micro timer down-counter. Writing a zero has no effect. Reading these bits will always return zero. **Note:** A micro timer force load affects all timer channels that use the corresponding micro time base.

13.3.0.2 PIT Force Load Timer Register (PITFLT)

	7	6	5	4	3	2	1	0
R	0	0	0	0	0	0	0	0
W					PFLT3	PFLT2	PFLT1	PFLT0
Reset	0	0	0	0	0	0	0	0

= Unimplemented or Reserved

Figure 13-4. PIT Force Load Timer Register (PITFLT)

Read: Anytime

Write: Anytime; writes to the reserved bits have no effect

Table 13-2. PITFLT Field Descriptions

Field	Description
3:0 PFLT[3:0]	**PIT Force Load Bits for Timer 3-0** — These bits have only an effect if the corresponding timer channel (PCE set) is enabled and if the PIT module is enabled (PITE set). Writing a one into a PFLT bit loads the corresponding 16-bit timer load register into the 16-bit timer down-counter. Writing a zero has no effect. Reading these bits will always return zero.

13.3.0.3 PIT Channel Enable Register (PITCE)

	7	6	5	4	3	2	1	0
R	0	0	0	0	PCE3	PCE2	PCE1	PCE0
W								
Reset	0	0	0	0	0	0	0	0

= Unimplemented or Reserved

Figure 13-5. PIT Channel Enable Register (PITCE)

Read: Anytime

Write: Anytime; writes to the reserved bits have no effect

Table 13-3. PITCE Field Descriptions

Field	Description
3:0 PCE[3:0]	**PIT Enable Bits for Timer Channel 3:0** — These bits enable the PIT channels 3-0. If PCE is cleared, the PIT channel is disabled and the corresponding flag bit in the PITTF register is cleared. When PCE is set, and if the PIT module is enabled (PITE = 1) the 16-bit timer counter is loaded with the start count value and starts down-counting. 0 The corresponding PIT channel is disabled. 1 The corresponding PIT channel is enabled.

13.3.0.4 PIT Multiplex Register (PITMUX)

	7	6	5	4	3	2	1	0
R	0	0	0	0	PMUX3	PMUX2	PMUX1	PMUX0
W								
Reset	0	0	0	0	0	0	0	0

= Unimplemented or Reserved

Figure 13-6. PIT Multiplex Register (PITMUX)

Read: Anytime

Write: Anytime; writes to the reserved bits have no effect

Table 13-4. PITMUX Field Descriptions

Field	Description
3:0 PMUX[3:0]	**PIT Multiplex Bits for Timer Channel 3:0** — These bits select if the corresponding 16-bit timer is connected to micro time base 1 or 0. If PMUX is modified, the corresponding 16-bit timer is immediately switched to the other micro time base. 0 The corresponding 16-bit timer counts with micro time base 0. 1 The corresponding 16-bit timer counts with micro time base 1.

13.3.0.5 PIT Interrupt Enable Register (PITINTE)

	7	6	5	4	3	2	1	0
R	0	0	0	0	PINTE3	PINTE2	PINTE1	PINTE0
W								
Reset	0	0	0	0	0	0	0	0

= Unimplemented or Reserved

Figure 13-7. PIT Interrupt Enable Register (PITINTE)

Read: Anytime

Write: Anytime; writes to the reserved bits have no effect

Table 13-5. PITINTE Field Descriptions

Field	Description
3:0 PINTE[3:0]	**PIT Time-out Interrupt Enable Bits for Timer Channel 3:0** — These bits enable an interrupt service request whenever the time-out flag PTF of the corresponding PIT channel is set. When an interrupt is pending (PTF set) enabling the interrupt will immediately cause an interrupt. To avoid this, the corresponding PTF flag has to be cleared first. 0 Interrupt of the corresponding PIT channel is disabled. 1 Interrupt of the corresponding PIT channel is enabled.

13.3.0.6 PIT Time-Out Flag Register (PITTF)

	7	6	5	4	3	2	1	0
R	0	0	0	0	PTF3	PTF2	PTF1	PTF0
W								
Reset	0	0	0	0	0	0	0	0

= Unimplemented or Reserved

Figure 13-8. PIT Time-Out Flag Register (PITTF)

Read: Anytime

Write: Anytime (write to clear); writes to the reserved bits have no effect

Table 13-6. PITTF Field Descriptions

Field	Description
3:0 PTF[3:0]	**PIT Time-out Flag Bits for Timer Channel 3:0** — PTF is set when the corresponding 16-bit timer modulus down-counter and the selected 8-bit micro timer modulus down-counter have counted to zero. The flag can be cleared by writing a one to the flag bit. Writing a zero has no effect. If flag clearing by writing a one and flag setting happen in the same bus clock cycle, the flag remains set. The flag bits are cleared if the PIT module is disabled or if the corresponding timer channel is disabled. 0 Time-out of the corresponding PIT channel has not yet occurred. 1 Time-out of the corresponding PIT channel has occurred.

13.3.0.7 PIT Micro Timer Load Register 0 to 1 (PITMTLD0–1)

	7	6	5	4	3	2	1	0
R W	PMTLD7	PMTLD6	PMTLD5	PMTLD4	PMTLD3	PMTLD2	PMTLD1	PMTLD0
Reset	0	0	0	0	0	0	0	0

Figure 13-9. PIT Micro Timer Load Register 0 (PITMTLD0)

	7	6	5	4	3	2	1	0
R W	PMTLD7	PMTLD6	PMTLD5	PMTLD4	PMTLD3	PMTLD2	PMTLD1	PMTLD0
Reset	0	0	0	0	0	0	0	0

Figure 13-10. PIT Micro Timer Load Register 1 (PITMTLD1)

Read: Anytime

Write: Anytime

Table 13-7. PITMTLD0–1 Field Descriptions

Field	Description
7:0 PMTLD[7:0]	**PIT Micro Timer Load Bits 7:0** — These bits set the 8-bit modulus down-counter load value of the micro timers. Writing a new value into the PITMTLD register will not restart the timer. When the micro timer has counted down to zero, the PMTLD register value will be loaded. The PFLMT bits in the PITCFLMT register can be used to immediately update the count register with the new value if an immediate load is desired.

13.3.0.8 PIT Load Register 0 to 3 (PITLD0–3)

	15	14	13	12	11	10	9	8	7	6	5	4	3	2	1	0
R/W	PLD15	PLD14	PLD13	PLD12	PLD11	PLD10	PLD9	PLD8	PLD7	PLD6	PLD5	PLD4	PLD3	PLD2	PLD1	PLD0
Reset	0	0	0	0	0	0	0	0	0	0	0	0	0	0	0	0

Figure 13-11. PIT Load Register 0 (PITLD0)

	15	14	13	12	11	10	9	8	7	6	5	4	3	2	1	0
R/W	PLD15	PLD14	PLD13	PLD12	PLD11	PLD10	PLD9	PLD8	PLD7	PLD6	PLD5	PLD4	PLD3	PLD2	PLD1	PLD0
Reset	0	0	0	0	0	0	0	0	0	0	0	0	0	0	0	0

Figure 13-12. PIT Load Register 1 (PITLD1)

	15	14	13	12	11	10	9	8	7	6	5	4	3	2	1	0
R/W	PLD15	PLD14	PLD13	PLD12	PLD11	PLD10	PLD9	PLD8	PLD7	PLD6	PLD5	PLD4	PLD3	PLD2	PLD1	PLD0
Reset	0	0	0	0	0	0	0	0	0	0	0	0	0	0	0	0

Figure 13-13. PIT Load Register 2 (PITLD2)

	15	14	13	12	11	10	9	8	7	6	5	4	3	2	1	0
R/W	PLD15	PLD14	PLD13	PLD12	PLD11	PLD10	PLD9	PLD8	PLD7	PLD6	PLD5	PLD4	PLD3	PLD2	PLD1	PLD0
Reset	0	0	0	0	0	0	0	0	0	0	0	0	0	0	0	0

Figure 13-14. PIT Load Register 3 (PITLD3)

Read: Anytime

Write: Anytime

Table 13-8. PITLD0–3 Field Descriptions

Field	Description
15:0 PLD[15:0]	**PIT Load Bits 15:0** — These bits set the 16-bit modulus down-counter load value. Writing a new value into the PITLD register must be a 16-bit access, to ensure data consistency. It will not restart the timer. When the timer has counted down to zero the PTF time-out flag will be set and the register value will be loaded. The PFLT bits in the PITFLT register can be used to immediately update the count register with the new value if an immediate load is desired.

13.3.0.9 PIT Count Register 0 to 3 (PITCNT0–3)

	15	14	13	12	11	10	9	8	7	6	5	4	3	2	1	0
R W	PCNT 15	PCNT 14	PCNT 13	PCNT 12	PCNT 11	PCNT 10	PCNT 9	PCNT 8	PCNT 7	PCNT 6	PCNT 5	PCNT 4	PCNT 3	PCNT 2	PCNT 1	PCNT 0
Reset	0	0	0	0	0	0	0	0	0	0	0	0	0	0	0	0

Figure 13-15. PIT Count Register 0 (PITCNT0)

	15	14	13	12	11	10	9	8	7	6	5	4	3	2	1	0
R W	PCNT 15	PCNT 14	PCNT 13	PCNT 12	PCNT 11	PCNT 10	PCNT 9	PCNT 8	PCNT 7	PCNT 6	PCNT 5	PCNT 4	PCNT 3	PCNT 2	PCNT 1	PCNT 0
Reset	0	0	0	0	0	0	0	0	0	0	0	0	0	0	0	0

Figure 13-16. PIT Count Register 1 (PITCNT1)

	15	14	13	12	11	10	9	8	7	6	5	4	3	2	1	0
R W	PCNT 15	PCNT 14	PCNT 13	PCNT 12	PCNT 11	PCNT 10	PCNT 9	PCNT 8	PCNT 7	PCNT 6	PCNT 5	PCNT 4	PCNT 3	PCNT 2	PCNT 1	PCNT 0
Reset	0	0	0	0	0	0	0	0	0	0	0	0	0	0	0	0

Figure 13-17. PIT Count Register 2 (PITCNT2)

	15	14	13	12	11	10	9	8	7	6	5	4	3	2	1	0
R W	PCNT 15	PCNT 14	PCNT 13	PCNT 12	PCNT 11	PCNT 10	PCNT 9	PCNT 8	PCNT 7	PCNT 6	PCNT 5	PCNT 4	PCNT 3	PCNT 2	PCNT 1	PCNT 0
Reset	0	0	0	0	0	0	0	0	0	0	0	0	0	0	0	0

Figure 13-18. PIT Count Register 3 (PITCNT3)

Read: Anytime

Write: Has no meaning or effect

Table 13-9. PITCNT0–3 Field Descriptions

Field	Description
15:0 PCNT[15:0]	**PIT Count Bits 15-0** — These bits represent the current 16-bit modulus down-counter value. The read access for the count register must take place in one clock cycle as a 16-bit access.

13.4 Functional Description

Figure 13-19 shows a detailed block diagram of the PIT module. The main parts of the PIT are status, control and data registers, two 8-bit down-counters, four 16-bit down-counters and an interrupt/trigger interface.

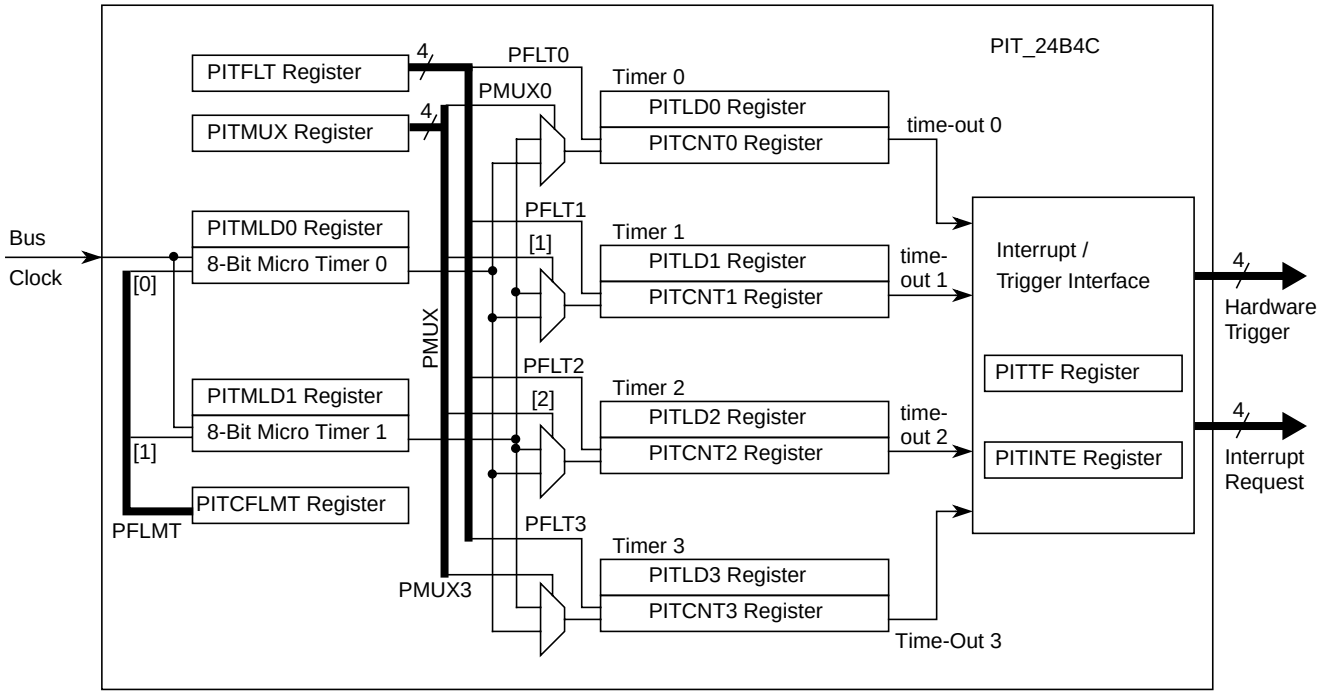

Figure 13-19. PIT Detailed Block Diagram

13.4.1 Timer

As shown in Figure 13-1and Figure 13-19, the 24-bit timers are built in a two-stage architecture with four 16-bit modulus down-counters and two 8-bit modulus down-counters. The 16-bit timers are clocked with two selectable micro time bases which are generated with 8-bit modulus down-counters. Each 16-bit timer is connected to micro time base 0 or 1 via the PMUX[3:0] bit setting in the PIT Multiplex (PITMUX) register.

A timer channel is enabled if the module enable bit PITE in the PIT control and force load micro timer (PITCFLMT) register is set and if the corresponding PCE bit in the PIT channel enable (PITCE) register is set. Two 8-bit modulus down-counters are used to generate two micro time bases. As soon as a micro time base is selected for an enabled timer channel, the corresponding micro timer modulus down-counter will load its start value as specified in the PITMTLD0 or PITMTLD1 register and will start down-counting. Whenever the micro timer down-counter has counted to zero the PITMTLD register is reloaded and the connected 16-bit modulus down-counters count one cycle.

Whenever a 16-bit timer counter and the connected 8-bit micro timer counter have counted to zero, the PITLD register is reloaded and the corresponding time-out flag PTF in the PIT time-out flag (PITTF) register is set, as shown in Figure 13-20. The time-out period is a function of the timer load (PITLD) and micro timer load (PITMTLD) registers and the bus clock f_{BUS}:

$$\text{time-out period} = (\text{PITMTLD} + 1) * (\text{PITLD} + 1) / f_{BUS}.$$

For example, for a 40 MHz bus clock, the maximum time-out period equals:

$$256 * 65536 * 25\ \text{ns} = 419.43\ \text{ms}.$$

The current 16-bit modulus down-counter value can be read via the PITCNT register. The micro timer down-counter values cannot be read.

The 8-bit micro timers can individually be restarted by writing a one to the corresponding force load micro timer PFLMT bits in the PIT control and force load micro timer (PITCFLMT) register. The 16-bit timers can individually be restarted by writing a one to the corresponding force load timer PFLT bits in the PIT forceload timer (PITFLT) register. If desired, any group of timers and micro timers can be restarted at the same time by using one 16-bit write to the adjacent PITCFLMT and PITFLT registers with the relevant bits set, as shown in Figure 13-20.

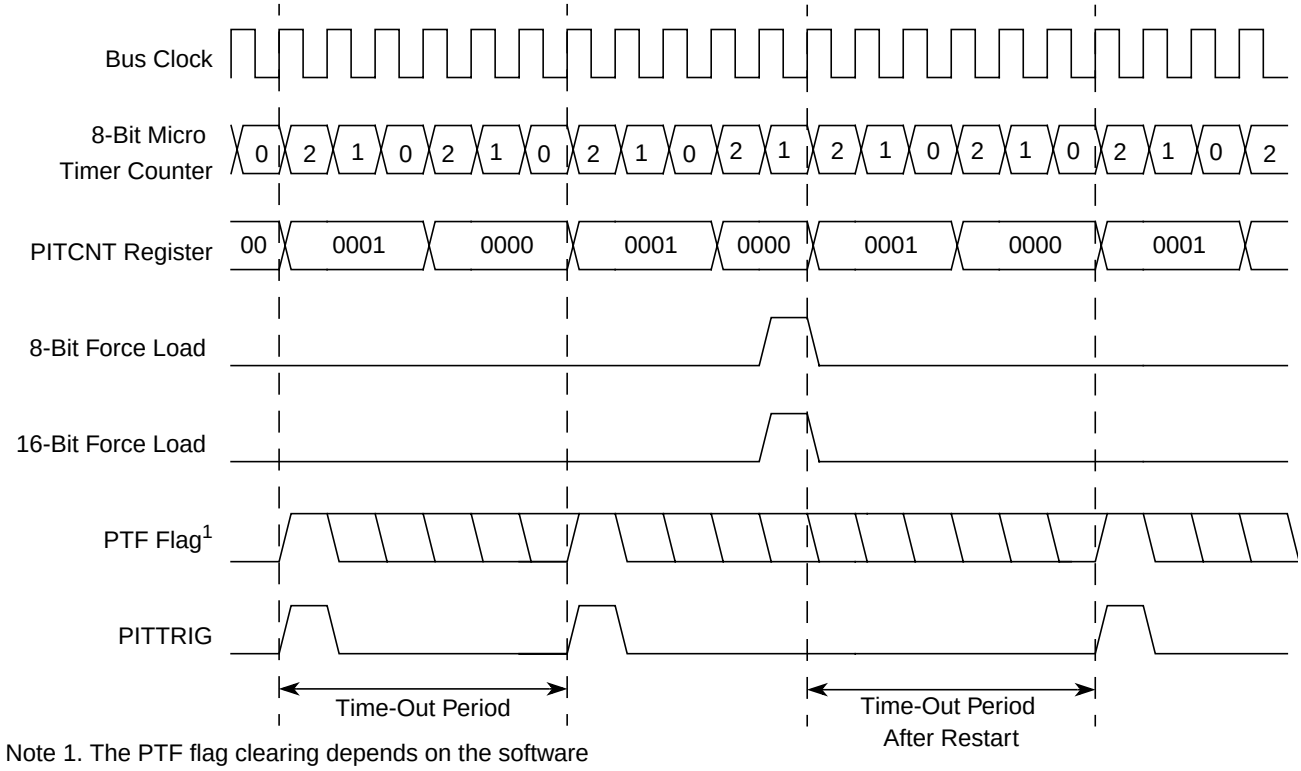

Figure 13-20. PIT Trigger and Flag Signal Timing

13.4.2 Interrupt Interface

Each time-out event can be used to trigger an interrupt service request. For each timer channel, an individual bit PINTE in the PIT interrupt enable (PITINTE) register exists to enable this feature. If PINTE

is set, an interrupt service is requested whenever the corresponding time-out flag PTF in the PIT time-out flag (PITTF) register is set. The flag can be cleared by writing a one to the flag bit.

NOTE

Be careful when resetting the PITE, PINTE or PITCE bits in case of pending PIT interrupt requests, to avoid spurious interrupt requests.

13.4.3 Hardware Trigger

The PIT module contains four hardware trigger signal lines PITTRIG[3:0], one for each timer channel. These signals can be connected on SoC level to peripheral modules enabling e.g. periodic ATD conversion (please refer to the SoC Guide for the mapping of PITTRIG[3:0] signals to peripheral modules).

Whenever a timer channel time-out is reached, the corresponding PTF flag is set and the corresponding trigger signal PITTRIG triggers a rising edge. The trigger feature requires a minimum time-out period of two bus clock cycles because the trigger is asserted high for at least one bus clock cycle. For load register values PITLD = 0x0001 and PITMTLD = 0x0002 the flag setting, trigger timing and a restart with force load is shown in Figure 13-20.

13.5 Initialization/Application Information

13.5.1 Startup

Set the configuration registers before the PITE bit in the PITCFLMT register is set. Before PITE is set, the configuration registers can be written in arbitrary order.

13.5.2 Shutdown

When the PITCE register bits, the PITINTE register bits or the PITE bit in the PITCFLMT register are cleared, the corresponding PIT interrupt flags are cleared. In case of a pending PIT interrupt request, a spurious interrupt can be generated. Two strategies, which avoid spurious interrupts, are recommended:

1. Reset the PIT interrupt flags only in an ISR. When entering the ISR, the I mask bit in the CCR is set automatically. The I mask bit must not be cleared before the PIT interrupt flags are cleared.
2. After setting the I mask bit with the SEI instruction, the PIT interrupt flags can be cleared. Then clear the I mask bit with the CLI instruction to re-enable interrupts.

13.5.3 Flag Clearing

A flag is cleared by writing a one to the flag bit. Always use store or move instructions to write a one in certain bit positions. Do not use the BSET instructions. Do not use any C-constructs that compile to BSET instructions. “BSET flag_register, #mask” must not be used for flag clearing because BSET is a read-modify-write instruction which writes back the “bit-wise or” of the flag_register and the mask into the flag_register. BSET would clear all flag bits that were set, independent from the mask.

For example, to clear flag bit 0 use: MOVB #$01,PITTF.

Chapter 14
Voltage Regulator (S12VREG3V3V5)

14.1 Introduction

Module VREG_3V3 is a dual output voltage regulator that provides two separate 2.5V (typical) supplies differing in the amount of current that can be sourced. The regulator input voltage range is from 3.3V up to 5V (typical).

14.1.1 Features

Module VREG_3V3 includes these distinctive features:

- Two parallel, linear voltage regulators
  - — Bandgap reference
- Low-voltage detect (LVD) with low-voltage interrupt (LVI)
- Power-on reset (POR)
- Low-voltage reset (LVR)
- Autonomous periodical interrupt (API)

14.1.2 Modes of Operation

There are three modes VREG_3V3 can operate in:

1. Full performance mode (FPM) (MCU is not in stop mode)

   The regulator is active, providing the nominal supply voltage of 2.5 V with full current sourcing capability at both outputs. Features LVD (low-voltage detect), LVR (low-voltage reset), and POR (power-on reset) are available. The API is available.
2. Reduced power mode (RPM) (MCU is in stop mode)

   The purpose is to reduce power consumption of the device. The output voltage may degrade to a lower value than in full performance mode, additionally the current sourcing capability is substantially reduced. Only the POR is available in this mode, LVD and LVR are disabled. The API is available.
3. Shutdown mode

   Controlled by VREGEN (see device level specification for connectivity of VREGEN).

   This mode is characterized by minimum power consumption. The regulator outputs are in a high-impedance state, only the POR feature is available, LVD and LVR are disabled. The API internal RC oscillator clock is not available.

   This mode must be used to disable the chip internal regulator VREG_3V3, i.e., to bypass the VREG_3V3 to use external supplies.

14.1.3 Block Diagram

Figure 14-1 shows the function principle of VREG_3V3 by means of a block diagram. The regulator core REG consists of two parallel subblocks, REG1 and REG2, providing two independent output voltages.

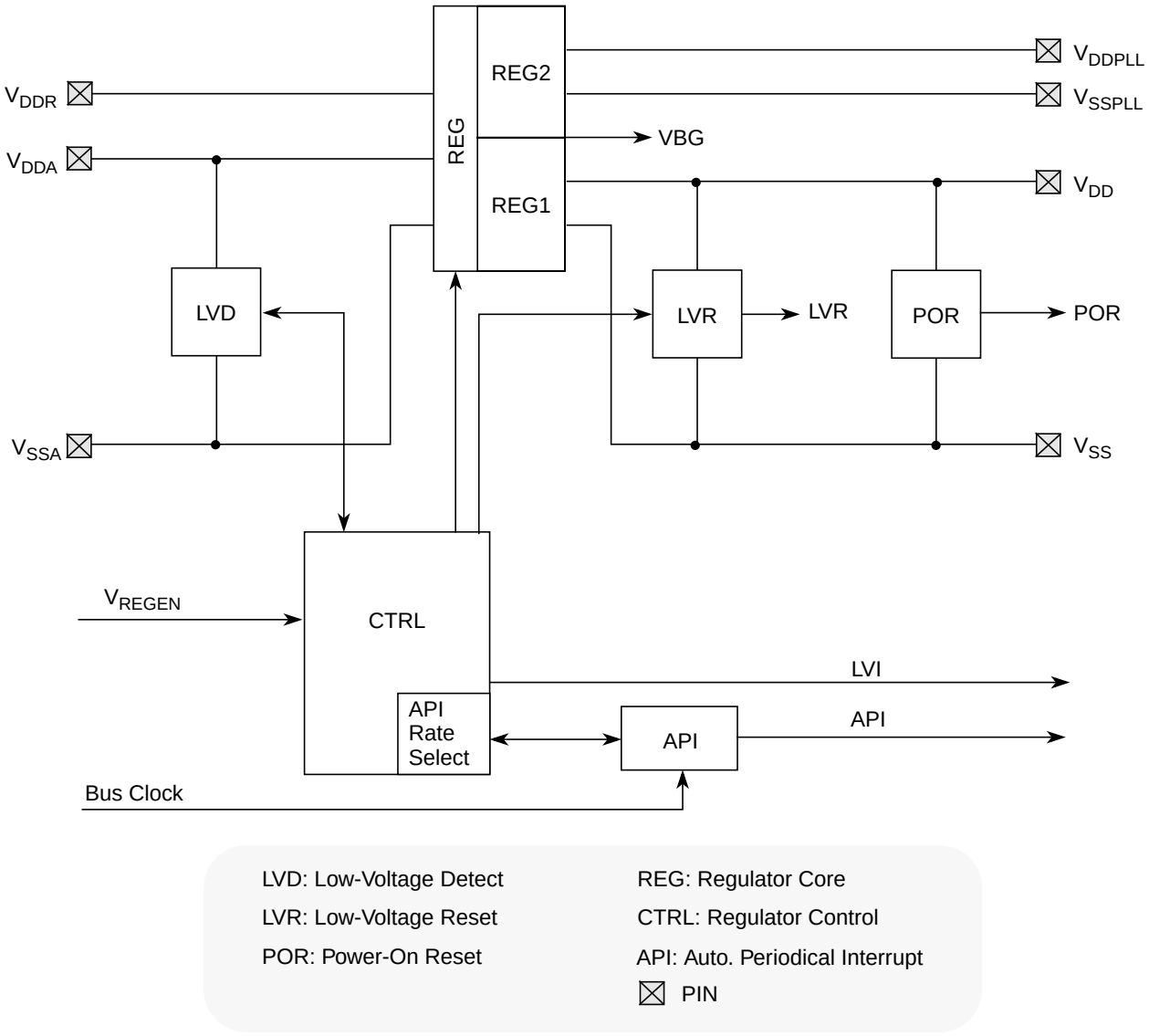

Figure 14-1. VREG_3V3 Block Diagram

14.2 External Signal Description

Due to the nature of VREG_3V3 being a voltage regulator providing the chip internal power supply voltages, most signals are power supply signals connected to pads.

Table 14-1 shows all signals of VREG_3V3 associated with pins.

Table 14-1. Signal Properties

Name	Function	Reset State	Pull Up
V_{DDR}	Power input (positive supply)	—	—
V_{DDA}	Quiet input (positive supply)	—	—
V_{SSA}	Quiet input (ground)	—	—
V_{DD}	Primary output (positive supply)	—	—
V_{SS}	Primary output (ground)	—	—
V_{DDPLL}	Secondary output (positive supply)	—	—
V_{SSPLL}	Secondary output (ground)	—	—
V_{REGEN} (optional)	Optional Regulator Enable	—	—

NOTE

Check device level specification for connectivity of the signals.

14.2.1 VDDR — Regulator Power Input Pins

Signal V_{DDR} is the power input of VREG_3V3. All currents sourced into the regulator loads flow through this pin. A chip external decoupling capacitor (>=100 nF, X7R ceramic) between V_{DDR} and V_{SSR} (if V_{SSR} is not available V_{SS}) can smooth ripple on V_{DDR}.

For entering shutdown mode, pin V_{DDR} should also be tied to ground on devices without VREGEN pin.

14.2.2 VDDA, VSSA — Regulator Reference Supply Pins

Signals $V_{DDA}/V_{SSA,}$ which are supposed to be relatively quiet, are used to supply the analog parts of the regulator. Internal precision reference circuits are supplied from these signals. A chip external decoupling capacitor (>=100 nF, X7R ceramic) between V_{DDA} and V_{SSA} can further improve the quality of this supply.

14.2.3 VDD, VSS — Regulator Output1 (Core Logic) Pins

Signals V_{DD}/V_{SS} are the primary outputs of VREG_3V3 that provide the power supply for the core logic. These signals are connected to device pins to allow external decoupling capacitors (220 nF, X7R ceramic).

In shutdown mode an external supply driving V_{DD}/V_{SS} can replace the voltage regulator.

14.2.4 VDDPLL, VSSPLL — Regulator Output2 (PLL) Pins

Signals V_{DDPLL}/V_{SSPLL} are the secondary outputs of VREG_3V3 that provide the power supply for the PLL and oscillator. These signals are connected to device pins to allow external decoupling capacitors (220 nF, X7R ceramic).

In shutdown mode, an external supply driving V_{DDPLL}/V_{SSPLL} can replace the voltage regulator.

14.2.5 V_{REGEN} — Optional Regulator Enable Pin

This optional signal is used to shutdown VREG_3V3. In that case, V_{DD}/V_{SS} and V_{DDPLL}/V_{SSPLL} must be provided externally. Shutdown mode is entered with VREGEN being low. If VREGEN is high, the VREG_3V3 is either in full peformance mode or in reduced power mode.

For the connectivity of VREGEN, see device specification.

NOTE

Switching from FPM or RPM to shutdown of VREG_3V3 and vice versa is not supported while MCU is powered.

14.3 Memory Map and Register Definition

This section provides a detailed description of all registers accessible in VREG_3V3.

If enabled in the system, the VREG_3V3 will abort all read and write accesses to reserved registers within it's memory slice.

14.3.1 Module Memory Map

Table 14-2 provides an overview of all used registers.

Table 14-2. Memory Map

Address Offset	Use	Access
0x0000	HT Control Register (VREGHTCL)	—
0x0001	Control Register (VREGCTRL)	R/W
0x0002	Autonomous Periodical Interrupt Control Register (VREGAPICL)	R/W
0x0003	Autonomous Periodical Interrupt Trimming Register (VREGAPITR)	R/W
0x0004	Autonomous Periodical Interrupt Period High (VREGAPIRH)	R/W
0x0005	Autonomous Periodical Interrupt Period Low (VREGAPIRL)	R/W
0x0006	Reserved 06	—
0x0007	Reserved 07	—

14.3.2 Register Descriptions

This section describes all the VREG_3V3 registers and their individual bits.

14.3.2.1 HT Control Register (VREGHTCL)

The VREGHTCL is reserved for test purposes. This register should not be written.

	7	6	5	4	3	2	1	0
R	0	0	0	0	0	0	0	0
W								
Reset	0	0	0	0	0	0	0	0

= Unimplemented or Reserved

Figure 14-2. HT Control Register (VREGHTCL)

14.3.2.2 Control Register (VREGCTRL)

The VREGCTRL register allows the configuration of the VREG_3V3 low-voltage detect features.

	7	6	5	4	3	2	1	0
R	0	0	0	0	0	LVDS	LVIE	LVIF
W								
Reset	0	0	0	0	0	0	0	0

= Unimplemented or Reserved

Figure 14-3. Control Register (VREGCTRL)

Table 14-3. VREGCTRL Field Descriptions

Field	Description
2 LVDS	**Low-Voltage Detect Status Bit** — This read-only status bit reflects the input voltage. Writes have no effect. 0 Input voltage V_{DDA} is above level V_{LVID} or RPM or shutdown mode. 1 Input voltage V_{DDA} is below level V_{LVIA} and FPM.
1 LVIE	**Low-Voltage Interrupt Enable Bit** 0 Interrupt request is disabled. 1 Interrupt will be requested whenever LVIF is set.
0 LVIF	**Low-Voltage Interrupt Flag** — LVIF is set to 1 when LVDS status bit changes. This flag can only be cleared by writing a 1. Writing a 0 has no effect. If enabled (LVIE = 1), LVIF causes an interrupt request. 0 No change in LVDS bit. 1 LVDS bit has changed. **Note:** On entering the reduced power mode the LVIF is not cleared by the VREG_3V3.

14.3.2.3 Autonomous Periodical Interrupt Control Register (VREGAPICL)

The VREGAPICL register allows the configuration of the VREG_3V3 autonomous periodical interrupt features.

	7	6	5	4	3	2	1	0
R	APICLK	0	0	0	0	APIFE	APIE	APIF
W								
Reset	0	0	0	0	0	0	0	0

= Unimplemented or Reserved

Figure 14-4. Autonomous Periodical Interrupt Control Register (VREGAPICL)

Table 14-4. VREGAPICL Field Descriptions

Field	Description
7 APICLK	**Autonomous Periodical Interrupt Clock Select Bit** — Selects the clock source for the API. Writable only if APIFE = 0; APICLK cannot be changed if APIFE is set by the same write operation. 0 Autonomous periodical interrupt clock used as source. 1 Bus clock used as source.
2 APIFE	**Autonomous Periodical Interrupt Feature Enable Bit** — Enables the API feature and starts the API timer when set. 0 Autonomous periodical interrupt is disabled. 1 Autonomous periodical interrupt is enabled and timer starts running.
1 APIE	**Autonomous Periodical Interrupt Enable Bit** 0 API interrupt request is disabled. 1 API interrupt will be requested whenever APIF is set.
0 APIF	**Autonomous Periodical Interrupt Flag** — APIF is set to 1 when the in the API configured time has elapsed. This flag can only be cleared by writing a 1 to it. Clearing of the flag has precedence over setting. Writing a 0 has no effect. If enabled (APIE = 1), APIF causes an interrupt request. 0 API timeout has not yet occurred. 1 API timeout has occurred.

14.3.2.4 Autonomous Periodical Interrupt Trimming Register (VREGAPITR)

The VREGAPITR register allows to trim the API timeout period.

	7	6	5	4	3	2	1	0
R	APITR5	APITR4	APITR3	APITR2	APITR1	APITR0	0	0
W								
Reset	0[1]	0[1]	0[1]	0[1]	0[1]	0[1]	0	0

1. Reset value is either 0 or preset by factory. See Device User Guide for details.

= Unimplemented or Reserved

Figure 14-5. Autonomous Periodical Interrupt Trimming Register (VREGAPITR)

Table 14-5. VREGAPITR Field Descriptions

Field	Description
7–2 APITR[5:0]	**Autonomous Periodical Interrupt Period Trimming Bits** — See Table 14-6 for trimming effects.

Table 14-6. Trimming Effect of APIT

Bit	Trimming Effect
APITR[5]	Increases period
APITR[4]	Decreases period less than APITR[5] increased it
APITR[3]	Decreases period less than APITR[4]
APITR[2]	Decreases period less than APITR[3]
APITR[1]	Decreases period less than APITR[2]
APITR[0]	Decreases period less than APITR[1]

14.3.2.5 Autonomous Periodical Interrupt Rate High and Low Register (VREGAPIRH / VREGAPIRL)

The VREGAPIRH and VREGAPIRL register allows the configuration of the VREG_3V3 autonomous periodical interrupt rate.

	7	6	5	4	3	2	1	0
R	0	0	0	0	APIR11	APIR10	APIR9	APIR8
W								
Reset	0	0	0	0	0	0	0	0

= Unimplemented or Reserved

Figure 14-6. Autonomous Periodical Interrupt Rate High Register (VREGAPIRH)

	7	6	5	4	3	2	1	0
R W	APIR7	APIR6	APIR5	APIR4	APIR3	APIR2	APIR1	APIR0
Reset	0	0	0	0	0	0	0	0

Figure 14-7. Autonomous Periodical Interrupt Rate Low Register (VREGAPIRL)

Table 14-7. VREGAPIRH / VREGAPIRL Field Descriptions

Field	Description
11-0 APIR[11:0]	**Autonomous Periodical Interrupt Rate Bits** — These bits define the timeout period of the API. See Table 14-8 for details of the effect of the autonomous periodical interrupt rate bits. Writable only if APIFE = 0 of VREGAPICL register.

Table 14-8. Selectable Autonomous Periodical Interrupt Periods

APICLK	APIR[11:0]	Selected Period
0	000	0.2 ms[1]
0	001	0.4 ms[1]
0	002	0.6 ms[1]
0	003	0.8 ms[1]
0	004	1.0 ms[1]
0	005	1.2 ms[1]
0	.....	.....
0	FFD	818.8 ms[1]
0	FFE	819 ms[1]
0	FFF	819.2 ms[1]
1	000	2 * bus clock period
1	001	4 * bus clock period
1	002	6 * bus clock period
1	003	8 * bus clock period
1	004	10 * bus clock period
1	005	12 * bus clock period
1	.....	.....
1	FFD	8188 * bus clock period
1	FFE	8190 * bus clock period
1	FFF	8192 * bus clock period

[1] When trimmed within specified accuracy. See electrical specifications for details.

You can calculate the selected period depending of APICLK as:

Period = 2*(APIR[11:0] + 1) * 0.1 ms or period = 2*(APIR[11:0] + 1) * bus clock period

14.3.2.6 Reserved 06

The Reserved 06 is reserved for test purposes.

	7	6	5	4	3	2	1	0
R	0	0	0	0	0	0	0	0
W								
Reset	0	0	0	0	0	0	0	0

= Unimplemented or Reserved

Figure 14-8. Reserved 06

14.3.2.7 Reserved 07

The Reserved 07 is reserved for test purposes.

	7	6	5	4	3	2	1	0
R	0	0	0	0	0	0	0	0
W								
Reset	0	0	0	0	0	0	0	0

= Unimplemented or Reserved

Figure 14-9. Reserved 07

14.4 Functional Description

14.4.1 General

Module VREG_3V3 is a voltage regulator, as depicted in Figure 14-1. The regulator functional elements are the regulator core (REG), a low-voltage detect module (LVD), a control block (CTRL), a power-on reset module (POR), and a low-voltage reset module (LVR).

14.4.2 Regulator Core (REG)

Respectively its regulator core has two parallel, independent regulation loops (REG1 and REG2) that differ only in the amount of current that can be delivered.

The regulator is a linear regulator with a bandgap reference when operated in full peformance mode. It acts as a voltage clamp in reduced power mode. All load currents flow from input V_{DDR} to V_{SS} or V_{SSPLL}. The reference circuits are supplied by V_{DDA} and V_{SSA}.

14.4.2.1 Full Performance Mode

In full peformance mode, the output voltage is compared with a reference voltage by an operational amplifier. The amplified input voltage difference drives the gate of an output transistor.

14.4.2.2 Reduced Power Mode

In reduced power mode, the gate of the output transistor is connected directly to a reference voltage to reduce power consumption.

14.4.3 Low-Voltage Detect (LVD)

Subblock LVD is responsible for generating the low-voltage interrupt (LVI). LVD monitors the input voltage (V_{DDA}–V_{SSA}) and continuously updates the status flag LVDS. Interrupt flag LVIF is set whenever status flag LVDS changes its value. The LVD is available in FPM and is inactive in reduced power mode or shutdown mode.

14.4.4 Power-On Reset (POR)

This functional block monitors V_{DD}. If V_{DD} is below V_{PORD}, POR is asserted; if V_{DD} exceeds V_{PORD}, the POR is deasserted. POR asserted forces the MCU into Reset. POR Deasserted will trigger the power-on sequence.

14.4.5 Low-Voltage Reset (LVR)

Block LVR monitors the primary output voltage V_{DD}. If it drops below the assertion level (V_{LVRA}) signal, LVR asserts; if V_{DD} rises above the deassertion level (V_{LVRD}) signal, LVR deasserts. The LVR function is available only in full peformance mode.

14.4.6 Regulator Control (CTRL)

This part contains the register block of VREG_3V3 and further digital functionality needed to control the operating modes. CTRL also represents the interface to the digital core logic.

14.4.7 Autonomous Periodical Interrupt (API)

Subblock API can generate periodical interrupts independent of the clock source of the MCU. To enable the timer, the bit APIFE needs to be set.

The API timer is either clocked by a trimmable internal RC oscillator or the bus clock. Timer operation will freeze when MCU clock source is selected and bus clock is turned off. See CRG specification for details. The clock source can be selected with bit APICLK. APICLK can only be written when APIFE is not set.

The APIR[11:0] bits determine the interrupt period. APIR[11:0] can only be written when APIFE is cleared. As soon as APIFE is set, the timer starts running for the period selected by APIR[11:0] bits. When the configured time has elapsed, the flag APIF is set. An interrupt, indicated by flag APIF = 1, is triggered if interrupt enable bit APIE = 1. The timer is started automatically again after it has set APIF.

The procedure to change APICLK or APIR[11:0] is first to clear APIFE, then write to APICLK or APIR[11:0], and afterwards set APIFE.

The API Trimming bits APITR[5:0] must be set so the minimum period equals 0.2 ms if stable frequency is desired.

See Table 14-6 for the trimming effect of APITR.

NOTE

The first period after enabling the counter by APIFE might be reduced.

The API internal RC oscillator clock is not available if VREG_3V3 is in Shutdown Mode.

14.4.8 Resets

This section describes how VREG_3V3 controls the reset of the MCU.The reset values of registers and signals are provided in Section 14.3, “Memory Map and Register Definition”. Possible reset sources are listed in Table 14-9.

Table 14-9. Reset Sources

Reset Source	Local Enable
Power-on reset	Always active
Low-voltage reset	Available only in full peformance mode

14.4.9 Description of Reset Operation

14.4.9.1 Power-On Reset (POR)

During chip power-up the digital core may not work if its supply voltage V_{DD} is below the POR deassertion level (V_{PORD}). Therefore, signal POR, which forces the other blocks of the device into reset, is kept high until V_{DD} exceeds V_{PORD}. The MCU will run the start-up sequence after POR deassertion. The power-on reset is active in all operation modes of VREG_3V3.

14.4.9.2 Low-Voltage Reset (LVR)

For details on low-voltage reset, see Section 14.4.5, “Low-Voltage Reset (LVR)”.

14.4.10 Interrupts

This section describes all interrupts originated by VREG_3V3.

The interrupt vectors requested by VREG_3V3 are listed in Table 14-10. Vector addresses and interrupt priorities are defined at MCU level.

Table 14-10. Interrupt Vectors

Interrupt Source	Local Enable
Low-voltage interrupt (LVI)	LVIE = 1; available only in full peformance mode

Table 14-10. Interrupt Vectors

Interrupt Source	Local Enable
Autonomous periodical interrupt (API)	APIE = 1

14.4.10.1 Low-Voltage Interrupt (LVI)

In FPM, VREG_3V3 monitors the input voltage V_{DDA}. Whenever V_{DDA} drops below level $V_{LVIA,}$ the status bit LVDS is set to 1. On the other hand, LVDS is reset to 0 when V_{DDA} rises above level V_{LVID}. An interrupt, indicated by flag LVIF = 1, is triggered by any change of the status bit LVDS if interrupt enable bit LVIE = 1.

NOTE

On entering the reduced power mode, the LVIF is not cleared by the VREG_3V3.

14.4.10.2 Autonomous Periodical Interrupt (API)

As soon as the configured timeout period of the API has elapsed, the APIF bit is set. An interrupt, indicated by flag APIF = 1, is triggered if interrupt enable bit APIE = 1.

Chapter 15
Background Debug Module (S12XBDMV2)

15.1 Introduction

This section describes the functionality of the background debug module (BDM) sub-block of the HCS12X core platform.

The background debug module (BDM) sub-block is a single-wire, background debug system implemented in on-chip hardware for minimal CPU intervention. All interfacing with the BDM is done via the BKGD pin.

The BDM has enhanced capability for maintaining synchronization between the target and host while allowing more flexibility in clock rates. This includes a sync signal to determine the communication rate and a handshake signal to indicate when an operation is complete. The system is backwards compatible to the BDM of the S12 family with the following exceptions:

- TAGGO command no longer supported by BDM
- External instruction tagging feature now part of DBG module
- BDM register map and register content extended/modified
- Global page access functionality
- Enabled but not active out of reset in emulation modes
- CLKSW bit set out of reset in emulation mode.
- Family ID readable from firmware ROM at global address 0x7FFF0F (value for HCS12X devices is 0xC1)

15.1.1 Features

The BDM includes these distinctive features:

- Single-wire communication with host development system
- Enhanced capability for allowing more flexibility in clock rates
- SYNC command to determine communication rate
- GO_UNTIL command
- Hardware handshake protocol to increase the performance of the serial communication
- Active out of reset in special single chip mode
- Nine hardware commands using free cycles, if available, for minimal CPU intervention
- Hardware commands not requiring active BDM
- 14 firmware commands execute from the standard BDM firmware lookup table

- Software control of BDM operation during wait mode
- Software selectable clocks
- Global page access functionality
- Enabled but not active out of reset in emulation modes
- CLKSW bit set out of reset in emulation mode.
- When secured, hardware commands are allowed to access the register space in special single chip mode, if the Flash and EEPROM erase tests fail.
- Family ID readable from firmware ROM at global address 0x7FFF0F (value for HCS12X devices is 0xC1)
- BDM hardware commands are operational until system stop mode is entered (all bus masters are in stop mode)

15.1.2 Modes of Operation

BDM is available in all operating modes but must be enabled before firmware commands are executed. Some systems may have a control bit that allows suspending the function during background debug mode.

15.1.2.1 Regular Run Modes

All of these operations refer to the part in run mode and not being secured. The BDM does not provide controls to conserve power during run mode.

- Normal modes

  General operation of the BDM is available and operates the same in all normal modes.
- Special single chip mode

  In special single chip mode, background operation is enabled and active out of reset. This allows programming a system with blank memory.
- Emulation modes

  In emulation mode, background operation is enabled but not active out of reset. This allows debugging and programming a system in this mode more easily.

15.1.2.2 Secure Mode Operation

If the device is in secure mode, the operation of the BDM is reduced to a small subset of its regular run mode operation. Secure operation prevents access to Flash or EEPROM other than allowing erasure. For more information please see Section 15.4.1, “Security”.

15.1.2.3 Low-Power Modes

The BDM can be used until all bus masters (e.g., CPU or XGATE) are in stop mode. When CPU is in a low power mode (wait or stop mode) all BDM firmware commands as well as the hardware BACKGROUND command can not be used respectively are ignored. In this case the CPU can not enter BDM active mode, and only hardware read and write commands are available. Also the CPU can not enter a low power mode during BDM active mode.

If all bus masters are in stop mode, the BDM clocks are stopped as well. When BDM clocks are disabled and one of the bus masters exits from stop mode the BDM clocks will restart and BDM will have a soft reset (clearing the instruction register, any command in progress and disable the ACK function). The BDM is now ready to receive a new command.

15.1.3 Block Diagram

A block diagram of the BDM is shown in Figure 15-1.

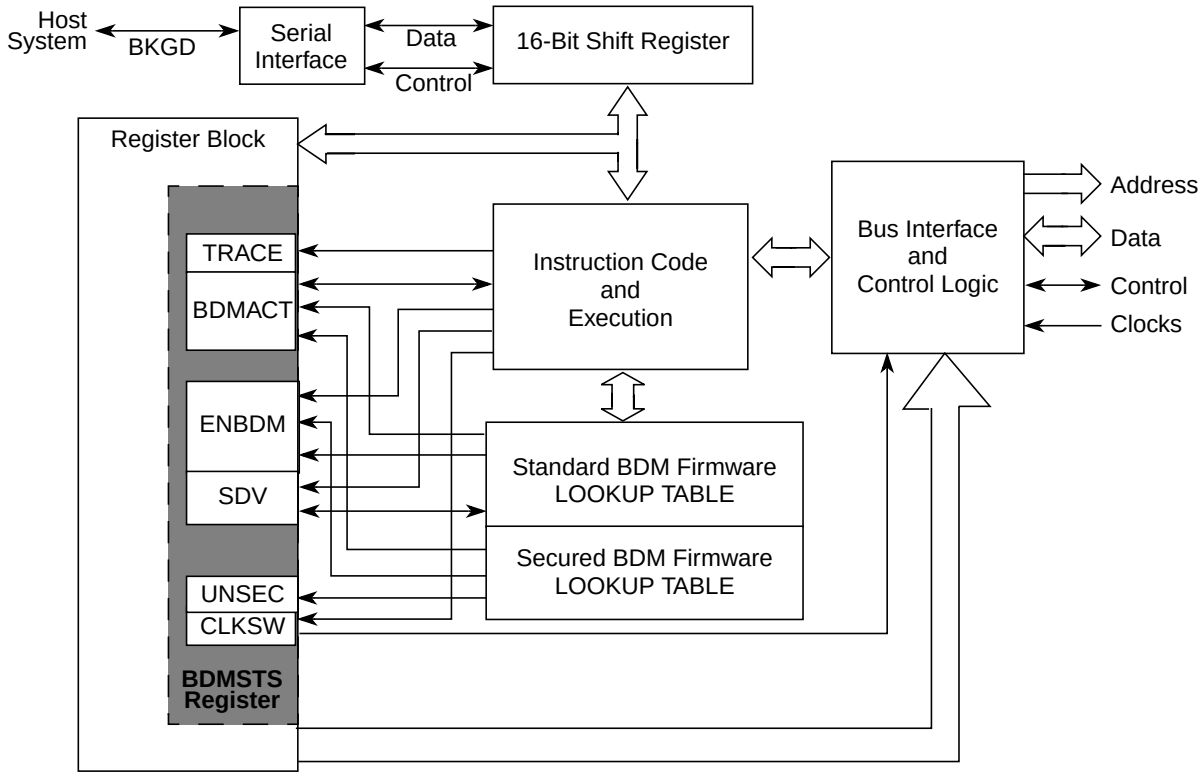

Figure 15-1. BDM Block Diagram

15.2 External Signal Description

A single-wire interface pin called the background debug interface (BKGD) pin is used to communicate with the BDM system. During reset, this pin is a mode select input which selects between normal and special modes of operation. After reset, this pin becomes the dedicated serial interface pin for the background debug mode.

15.3 Memory Map and Register Definition

15.3.1 Module Memory Map

Table 15-1 shows the BDM memory map when BDM is active.

Table 15-1. BDM Memory Map

Global Address	Module	Size (Bytes)
0x7FFF00–0x7FFF0B	BDM registers	12
0x7FFF0C–0x7FFF0E	BDM firmware ROM	3
0x7FFF0F	Family ID (part of BDM firmware ROM)	1
0x7FFF10–0x7FFFFF	BDM firmware ROM	240

15.3.2 Register Descriptions

A summary of the registers associated with the BDM is shown in Figure 15-2. Registers are accessed by host-driven communications to the BDM hardware using READ_BD and WRITE_BD commands.

Global Address	Register Name		Bit 7	6	5	4	3	2	1	Bit 0
0x7FFF00	Reserved	R	X	X	X	X	X	X	0	0
		W								
0x7FFF01	BDMSTS	R	ENBDM	BDMACT	0	SDV	TRACE	CLKSW	UNSEC	0
		W								
0x7FFF02	Reserved	R	X	X	X	X	X	X	X	X
		W								
0x7FFF03	Reserved	R	X	X	X	X	X	X	X	X
		W								
0x7FFF04	Reserved	R	X	X	X	X	X	X	X	X
		W								
0x7FFF05	Reserved	R	X	X	X	X	X	X	X	X
		W								
0x7FFF06	BDMCCRL	R	CCR7	CCR6	CCR5	CCR4	CCR3	CCR2	CCR1	CCR0
		W								
0x7FFF07	BDMCCRH	R	0	0	0	0	0	CCR10	CCR9	CCR8
		W								
0x7FFF08	BDMGPR	R	BGAE	BGP6	BGP5	BGP4	BGP3	BGP2	BGP1	BGP0
		W								
0x7FFF09	Reserved	R	0	0	0	0	0	0	0	0
		W								
0x7FFF0A	Reserved	R	0	0	0	0	0	0	0	0
		W								
0x7FFF0B	Reserved	R	0	0	0	0	0	0	0	0
		W								

= Unimplemented, Reserved

= Implemented (do not alter)

X = Indeterminate

0 = Always read zero

Figure 15-2. BDM Register Summary

15.3.2.1 BDM Status Register (BDMSTS)

Register Global Address 0x7FFF01

	7	6	5	4	3	2	1	0
R	ENBDM	BDMACT	0	SDV	TRACE	CLKSW	UNSEC	0
W								
Reset								
Special Single-Chip Mode	0[1]	1	0	0	0	0	0[3]	0
Emulation Modes	1	0	0	0	0	1[2]	0	0
All Other Modes	0	0	0	0	0	0	0	0

= Unimplemented, Reserved

= Implemented (do not alter)

0 = Always read zero

[1] ENBDM is read as 1 by a debugging environment in special single chip mode when the device is not secured or secured but fully erased (Flash and EEPROM). This is because the ENBDM bit is set by the standard firmware before a BDM command can be fully transmitted and executed.

[2] CLKSW is read as 1 by a debugging environment in emulation modes when the device is not secured and read as 0 when secured.

[3] UNSEC is read as 1 by a debugging environment in special single chip mode when the device is secured and fully erased, else it is 0 and can only be read if not secure (see also bit description).

Figure 15-3. BDM Status Register (BDMSTS)

Read: All modes through BDM operation when not secured

Write: All modes through BDM operation when not secured, but subject to the following:

— ENBDM should only be set via a BDM hardware command if the BDM firmware commands are needed. (This does not apply in special single chip and emulation modes).

— BDMACT can only be set by BDM hardware upon entry into BDM. It can only be cleared by the standard BDM firmware lookup table upon exit from BDM active mode.

— CLKSW can only be written via BDM hardware WRITE_BD commands.

— All other bits, while writable via BDM hardware or standard BDM firmware write commands, should only be altered by the BDM hardware or standard firmware lookup table as part of BDM command execution.

Table 15-2. BDMSTS Field Descriptions

Field	Description
7 ENBDM	**Enable BDM** — This bit controls whether the BDM is enabled or disabled. When enabled, BDM can be made active to allow firmware commands to be executed. When disabled, BDM cannot be made active but BDM hardware commands are still allowed. 0 BDM disabled 1 BDM enabled **Note:** ENBDM is set by the firmware out of reset in special single chip mode and by hardware in emulation modes. In special single chip mode with the device secured, this bit will not be set by the firmware until after the EEPROM and Flash erase verify tests are complete. In emulation modes with the device secured, the BDM operations are blocked.

Table 15-2. BDMSTS Field Descriptions (continued)

Field	Description
6 BDMACT	**BDM Active Status** — This bit becomes set upon entering BDM. The standard BDM firmware lookup table is then enabled and put into the memory map. BDMACT is cleared by a carefully timed store instruction in the standard BDM firmware as part of the exit sequence to return to user code and remove the BDM memory from the map. 0 BDM not active 1 BDM active
4 SDV	**Shift Data Valid** — This bit is set and cleared by the BDM hardware. It is set after data has been transmitted as part of a firmware or hardware read command or after data has been received as part of a firmware or hardware write command. It is cleared when the next BDM command has been received or BDM is exited. SDV is used by the standard BDM firmware to control program flow execution. 0 Data phase of command not complete 1 Data phase of command is complete
3 TRACE	**TRACE1 BDM Firmware Command is Being Executed** — This bit gets set when a BDM TRACE1 firmware command is first recognized. It will stay set until BDM firmware is exited by one of the following BDM commands: GO or GO_UNTIL. 0 TRACE1 command is not being executed 1 TRACE1 command is being executed
2 CLKSW	**Clock Switch** — The CLKSW bit controls which clock the BDM operates with. It is only writable from a hardware BDM command. A minimum delay of 150 cycles at the clock speed that is active during the data portion of the command send to change the clock source should occur before the next command can be send. The delay should be obtained no matter which bit is modified to effectively change the clock source (either PLLSEL bit or CLKSW bit). This guarantees that the start of the next BDM command uses the new clock for timing subsequent BDM communications. Table 15-3 shows the resulting BDM clock source based on the CLKSW and the PLLSEL (PLL select in the CRG module, the bit is part of the CLKSEL register) bits. **Note:** The BDM alternate clock source can only be selected when CLKSW = 0 and PLLSEL = 1. The BDM serial interface is now fully synchronized to the alternate clock source, when enabled. This eliminates frequency restriction on the alternate clock which was required on previous versions. Refer to the device specification to determine which clock connects to the alternate clock source input. **Note:** If the acknowledge function is turned on, changing the CLKSW bit will cause the ACK to be at the new rate for the write command which changes it. **Note:** In emulation mode, the CLKSW bit will be set out of RESET.
1 UNSEC	**Unsecure** — If the device is secured this bit is only writable in special single chip mode from the BDM secure firmware. It is in a zero state as secure mode is entered so that the secure BDM firmware lookup table is enabled and put into the memory map overlapping the standard BDM firmware lookup table. The secure BDM firmware lookup table verifies that the on-chip EEPROM and Flash EEPROM are erased. This being the case, the UNSEC bit is set and the BDM program jumps to the start of the standard BDM firmware lookup table and the secure BDM firmware lookup table is turned off. If the erase test fails, the UNSEC bit will not be asserted. 0 System is in a secured mode. 1 System is in a unsecured mode. **Note:** When UNSEC is set, security is off and the user can change the state of the secure bits in the on-chip Flash EEPROM. Note that if the user does not change the state of the bits to “unsecured” mode, the system will be secured again when it is next taken out of reset.After reset this bit has no meaning or effect when the security byte in the Flash EEPROM is configured for unsecure mode.

Table 15-3. BDM Clock Sources

PLLSEL	CLKSW	BDMCLK
0	0	Bus clock dependent on oscillator
0	1	Bus clock dependent on oscillator
1	0	Alternate clock (refer to the device specification to determine the alternate clock source)
1	1	Bus clock dependent on the PLL

15.3.2.2 BDM CCR LOW Holding Register (BDMCCRL)

Register Global Address 0x7FFF06

	7	6	5	4	3	2	1	0
R W	CCR7	CCR6	CCR5	CCR4	CCR3	CCR2	CCR1	CCR0
Reset								
Special Single-Chip Mode	1	1	0	0	1	0	0	0
All Other Modes	0	0	0	0	0	0	0	0

Figure 15-4. BDM CCR LOW Holding Register (BDMCCRL)

Read: All modes through BDM operation when not secured

Write: All modes through BDM operation when not secured

NOTE

When BDM is made active, the CPU stores the content of its CCR_L register in the BDMCCRL register. However, out of special single-chip reset, the BDMCCRL is set to 0xD8 and not 0xD0 which is the reset value of the CCR_L register in this CPU mode. Out of reset in all other modes the BDMCCRL register is read zero.

When entering background debug mode, the BDM CCR LOW holding register is used to save the low byte of the condition code register of the user's program. It is also used for temporary storage in the standard BDM firmware mode. The BDM CCR LOW holding register can be written to modify the CCR value.

15.3.2.3 BDM CCR HIGH Holding Register (BDMCCRH)

Register Global Address 0x7FFF07

	7	6	5	4	3	2	1	0
R	0	0	0	0	0	CCR10	CCR9	CCR8
W								
Reset	0	0	0	0	0	0	0	0

= Unimplemented or Reserved

Figure 15-5. BDM CCR HIGH Holding Register (BDMCCRH)

Read: All modes through BDM operation when not secured

Write: All modes through BDM operation when not secured

When entering background debug mode, the BDM CCR HIGH holding register is used to save the high byte of the condition code register of the user's program. The BDM CCR HIGH holding register can be written to modify the CCR value.

15.3.2.4 BDM Global Page Index Register (BDMGPR)

Register Global Address 0x7FFF08

	7	6	5	4	3	2	1	0
R W	BGAE	BGP6	BGP5	BGP4	BGP3	BGP2	BGP1	BGP0
Reset	0	0	0	0	0	0	0	0

Figure 15-6. BDM Global Page Register (BDMGPR)

Read: All modes through BDM operation when not secured

Write: All modes through BDM operation when not secured

Table 15-4. BDMGPR Field Descriptions

Field	Description
7 BGAE	**BDM Global Page Access Enable Bit** — BGAE enables global page access for BDM hardware and firmware read/write instructions The BDM hardware commands used to access the BDM registers (READ_BD_ and WRITE_BD_) can not be used for global accesses even if the BGAE bit is set. 0 BDM Global Access disabled 1 BDM Global Access enabled
6–0 BGP[6:0]	**BDM Global Page Index Bits 6–0** — These bits define the extended address bits from 22 to 16. For more detailed information regarding the global page window scheme, please refer to the S12X_MMC Block Guide.

15.3.3 Family ID Assignment

The family ID is a 8-bit value located in the firmware ROM (at global address: 0x7FFF0F). The read-only value is a unique family ID which is 0xC1 for S12X devices.

15.4 Functional Description

The BDM receives and executes commands from a host via a single wire serial interface. There are two types of BDM commands: hardware and firmware commands.

Hardware commands are used to read and write target system memory locations and to enter active background debug mode, see Section 15.4.3, “BDM Hardware Commands”. Target system memory includes all memory that is accessible by the CPU.

Firmware commands are used to read and write CPU resources and to exit from active background debug mode, see Section 15.4.4, “Standard BDM Firmware Commands”. The CPU resources referred to are the accumulator (D), X index register (X), Y index register (Y), stack pointer (SP), and program counter (PC).

Hardware commands can be executed at any time and in any mode excluding a few exceptions as highlighted (see Section 15.4.3, “BDM Hardware Commands”) and in secure mode (see Section 15.4.1, “Security”). Firmware commands can only be executed when the system is not secure and is in active background debug mode (BDM).

15.4.1 Security

If the user resets into special single chip mode with the system secured, a secured mode BDM firmware lookup table is brought into the map overlapping a portion of the standard BDM firmware lookup table. The secure BDM firmware verifies that the on-chip EEPROM and Flash EEPROM are erased. This being the case, the UNSEC and ENBDM bit will get set. The BDM program jumps to the start of the standard BDM firmware and the secured mode BDM firmware is turned off and all BDM commands are allowed. If the EEPROM or Flash do not verify as erased, the BDM firmware sets the ENBDM bit, without asserting UNSEC, and the firmware enters a loop. This causes the BDM hardware commands to become enabled, but does not enable the firmware commands. This allows the BDM hardware to be used to erase the EEPROM and Flash.

BDM operation is not possible in any other mode than special single chip mode when the device is secured. The device can only be unsecured via BDM serial interface in special single chip mode. For more information regarding security, please see the S12X_9SEC Block Guide.

15.4.2 Enabling and Activating BDM

The system must be in active BDM to execute standard BDM firmware commands. BDM can be activated only after being enabled. BDM is enabled by setting the ENBDM bit in the BDM status (BDMSTS) register. The ENBDM bit is set by writing to the BDM status (BDMSTS) register, via the single-wire interface, using a hardware command such as WRITE_BD_BYTE.

After being enabled, BDM is activated by one of the following[1]:

- Hardware BACKGROUND command
- CPU BGND instruction
- External instruction tagging mechanism[2]
- Breakpoint force or tag mechanism[2]

When BDM is activated, the CPU finishes executing the current instruction and then begins executing the firmware in the standard BDM firmware lookup table. When BDM is activated by a breakpoint, the type of breakpoint used determines if BDM becomes active before or after execution of the next instruction.

NOTE

If an attempt is made to activate BDM before being enabled, the CPU resumes normal instruction execution after a brief delay. If BDM is not enabled, any hardware BACKGROUND commands issued are ignored by the BDM and the CPU is not delayed.

In active BDM, the BDM registers and standard BDM firmware lookup table are mapped to addresses 0x7FFF00 to 0x7FFFFF. BDM registers are mapped to addresses 0x7FFF00 to 0x7FFF0B. The BDM uses these registers which are readable anytime by the BDM. However, these registers are not readable by user programs.

15.4.3 BDM Hardware Commands

Hardware commands are used to read and write target system memory locations and to enter active background debug mode. Target system memory includes all memory that is accessible by the CPU such as on-chip RAM, EEPROM, Flash EEPROM, I/O and control registers, and all external memory.

Hardware commands are executed with minimal or no CPU intervention and do not require the system to be in active BDM for execution, although, they can still be executed in this mode. When executing a hardware command, the BDM sub-block waits for a free bus cycle so that the background access does not disturb the running application program. If a free cycle is not found within 128 clock cycles, the CPU is momentarily frozen so that the BDM can steal a cycle. When the BDM finds a free cycle, the operation does not intrude on normal CPU operation provided that it can be completed in a single cycle. However, if an operation requires multiple cycles the CPU is frozen until the operation is complete, even though the BDM found a free cycle.

The BDM hardware commands are listed in Table 15-5.

The READ_BD and WRITE_BD commands allow access to the BDM register locations. These locations are not normally in the system memory map but share addresses with the application in memory. To distinguish between physical memory locations that share the same address, BDM memory resources are enabled just for the READ_BD and WRITE_BD access cycle. This allows the BDM to access BDM locations unobtrusively, even if the addresses conflict with the application memory map.

1. BDM is enabled and active immediately out of special single-chip reset.
2. This method is provided by the S12X_DBG module.

Table 15-5. Hardware Commands

Command	Opcode (hex)	Data	Description
BACKGROUND	90	None	Enter background mode if firmware is enabled. If enabled, an ACK will be issued when the part enters active background mode.
ACK_ENABLE	D5	None	Enable Handshake. Issues an ACK pulse after the command is executed.
ACK_DISABLE	D6	None	Disable Handshake. This command does not issue an ACK pulse.
READ_BD_BYTE	E4	16-bit address 16-bit data out	Read from memory with standard BDM firmware lookup table in map. Odd address data on low byte; even address data on high byte.
READ_BD_WORD	EC	16-bit address 16-bit data out	Read from memory with standard BDM firmware lookup table in map. Must be aligned access.
READ_BYTE	E0	16-bit address 16-bit data out	Read from memory with standard BDM firmware lookup table out of map. Odd address data on low byte; even address data on high byte.
READ_WORD	E8	16-bit address 16-bit data out	Read from memory with standard BDM firmware lookup table out of map. Must be aligned access.
WRITE_BD_BYTE	C4	16-bit address 16-bit data in	Write to memory with standard BDM firmware lookup table in map. Odd address data on low byte; even address data on high byte.
WRITE_BD_WORD	CC	16-bit address 16-bit data in	Write to memory with standard BDM firmware lookup table in map. Must be aligned access.
WRITE_BYTE	C0	16-bit address 16-bit data in	Write to memory with standard BDM firmware lookup table out of map. Odd address data on low byte; even address data on high byte.
WRITE_WORD	C8	16-bit address 16-bit data in	Write to memory with standard BDM firmware lookup table out of map. Must be aligned access.

NOTE:
If enabled, ACK will occur when data is ready for transmission for all BDM READ commands and will occur after the write is complete for all BDM WRITE commands.

15.4.4 Standard BDM Firmware Commands

Firmware commands are used to access and manipulate CPU resources. The system must be in active BDM to execute standard BDM firmware commands, see Section 15.4.2, “Enabling and Activating BDM”. Normal instruction execution is suspended while the CPU executes the firmware located in the standard BDM firmware lookup table. The hardware command BACKGROUND is the usual way to activate BDM.

As the system enters active BDM, the standard BDM firmware lookup table and BDM registers become visible in the on-chip memory map at 0x7FFF00–0x7FFFFF, and the CPU begins executing the standard BDM firmware. The standard BDM firmware watches for serial commands and executes them as they are received.

The firmware commands are shown in Table 15-6.

Table 15-6. Firmware Commands

Command[1]	Opcode (hex)	Data	Description
READ_NEXT[2]	62	16-bit data out	Increment X index register by 2 (X = X + 2), then read word X points to.
READ_PC	63	16-bit data out	Read program counter.
READ_D	64	16-bit data out	Read D accumulator.
READ_X	65	16-bit data out	Read X index register.
READ_Y	66	16-bit data out	Read Y index register.
READ_SP	67	16-bit data out	Read stack pointer.
WRITE_NEXT<f-helvetica><st-superscript>	42	16-bit data in	Increment X index register by 2 (X = X + 2), then write word to location pointed to by X.
WRITE_PC	43	16-bit data in	Write program counter.
WRITE_D	44	16-bit data in	Write D accumulator.
WRITE_X	45	16-bit data in	Write X index register.
WRITE_Y	46	16-bit data in	Write Y index register.
WRITE_SP	47	16-bit data in	Write stack pointer.
GO	08	none	Go to user program. If enabled, ACK will occur when leaving active background mode.
GO_UNTIL[3]	0C	none	Go to user program. If enabled, ACK will occur upon returning to active background mode.
TRACE1	10	none	Execute one user instruction then return to active BDM. If enabled, ACK will occur upon returning to active background mode.
TAGGO -> GO	18	none	(Previous enable tagging and go to user program.) This command will be deprecated and should not be used anymore. Opcode will be executed as a GO command.

1 If enabled, ACK will occur when data is ready for transmission for all BDM READ commands and will occur after the write is complete for all BDM WRITE commands.

2 When the firmware command READ_NEXT or WRITE_NEXT is used to access the BDM address space the BDM resources are accessed rather than user code. Writing BDM firmware is not possible.

3 System stop disables the ACK function and ignored commands will not have an ACK-pulse (e.g., CPU in stop or wait mode). The GO_UNTIL command will not get an Acknowledge if CPU executes the wait or stop instruction before the “UNTIL” condition (BDM active again) is reached (see Section 15.4.7, “Serial Interface Hardware Handshake Protocol” last Note).

15.4.5 BDM Command Structure

Hardware and firmware BDM commands start with an 8-bit opcode followed by a 16-bit address and/or a 16-bit data word depending on the command. All the read commands return 16 bits of data despite the byte or word implication in the command name.

> 8-bit reads return 16-bits of data, of which, only one byte will contain valid data. If reading an even address, the valid data will appear in the MSB. If reading an odd address, the valid data will appear in the LSB.
>
> 16-bit misaligned reads and writes are generally not allowed. If attempted by BDM hardware command, the BDM will ignore the least significant bit of the address and will assume an even address from the remaining bits.
>
> The following cycle count information is only valid when the external wait function is not used (see wait bit of EBI sub-block). During an external wait the BDM can not steal a cycle. Hence be careful with the external wait function if the BDM serial interface is much faster than the bus, because of the BDM soft-reset after time-out (see Section 15.4.11, “Serial Communication Time Out”).

For hardware data read commands, the external host must wait at least 150 bus clock cycles after sending the address before attempting to obtain the read data. This is to be certain that valid data is available in the BDM shift register, ready to be shifted out. For hardware write commands, the external host must wait 150 bus clock cycles after sending the data to be written before attempting to send a new command. This is to avoid disturbing the BDM shift register before the write has been completed. The 150 bus clock cycle delay in both cases includes the maximum 128 cycle delay that can be incurred as the BDM waits for a free cycle before stealing a cycle.

For firmware read commands, the external host should wait at least 48 bus clock cycles after sending the command opcode and before attempting to obtain the read data. This includes the potential of extra cycles when the access is external and stretched (+1 to maximum +7 cycles) or to registers of the PRU (port replacement unit) in emulation mode. The 48 cycle wait allows enough time for the requested data to be made available in the BDM shift register, ready to be shifted out.

NOTE

> This timing has increased from previous BDM modules due to the new capability in which the BDM serial interface can potentially run faster than the bus. On previous BDM modules this extra time could be hidden within the serial time.

For firmware write commands, the external host must wait 36 bus clock cycles after sending the data to be written before attempting to send a new command. This is to avoid disturbing the BDM shift register before the write has been completed.

The external host should wait at least for 76 bus clock cycles after a TRACE1 or GO command before starting any new serial command. This is to allow the CPU to exit gracefully from the standard BDM firmware lookup table and resume execution of the user code. Disturbing the BDM shift register prematurely may adversely affect the exit from the standard BDM firmware lookup table.

NOTE

If the bus rate of the target processor is unknown or could be changing or the external wait function is used, it is recommended that the ACK (acknowledge function) is used to indicate when an operation is complete. When using ACK, the delay times are automated.

Figure 15-7 represents the BDM command structure. The command blocks illustrate a series of eight bit times starting with a falling edge. The bar across the top of the blocks indicates that the BKGD line idles in the high state. The time for an 8-bit command is 8 × 16 target clock cycles.[1]

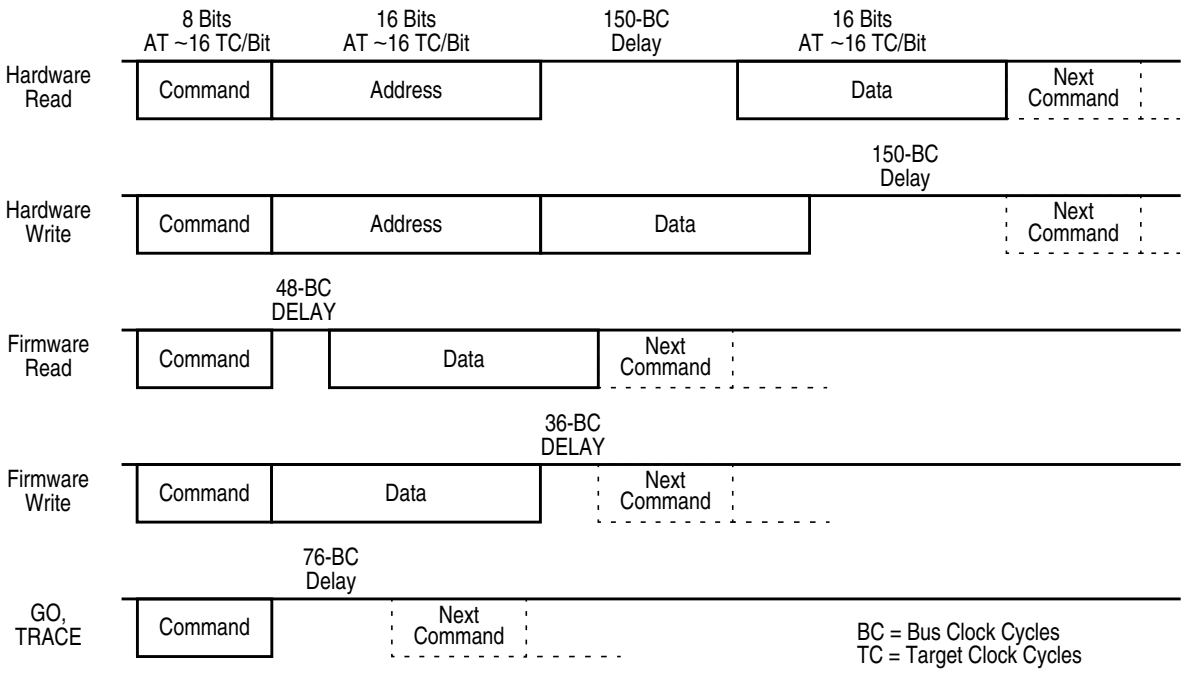

Figure 15-7. BDM Command Structure

1. Target clock cycles are cycles measured using the target MCU's serial clock rate. See Section 15.4.6, "BDM Serial Interface" and Section 15.3.2.1, "BDM Status Register (BDMSTS)" for information on how serial clock rate is selected.

15.4.6 BDM Serial Interface

The BDM communicates with external devices serially via the BKGD pin. During reset, this pin is a mode select input which selects between normal and special modes of operation. After reset, this pin becomes the dedicated serial interface pin for the BDM.

The BDM serial interface is timed using the clock selected by the CLKSW bit in the status register see Section 15.3.2.1, “BDM Status Register (BDMSTS)”. This clock will be referred to as the target clock in the following explanation.

The BDM serial interface uses a clocking scheme in which the external host generates a falling edge on the BKGD pin to indicate the start of each bit time. This falling edge is sent for every bit whether data is transmitted or received. Data is transferred most significant bit (MSB) first at 16 target clock cycles per bit. The interface times out if 512 clock cycles occur between falling edges from the host.

The BKGD pin is a pseudo open-drain pin and has an weak on-chip active pull-up that is enabled at all times. It is assumed that there is an external pull-up and that drivers connected to BKGD do not typically drive the high level. Since R-C rise time could be unacceptably long, the target system and host provide brief driven-high (speedup) pulses to drive BKGD to a logic 1. The source of this speedup pulse is the host for transmit cases and the target for receive cases.

The timing for host-to-target is shown in Figure 15-8 and that of target-to-host in Figure 15-9 and Figure 15-10. All four cases begin when the host drives the BKGD pin low to generate a falling edge. Since the host and target are operating from separate clocks, it can take the target system up to one full clock cycle to recognize this edge. The target measures delays from this perceived start of the bit time while the host measures delays from the point it actually drove BKGD low to start the bit up to one target clock cycle earlier. Synchronization between the host and target is established in this manner at the start of every bit time.

Figure 15-8 shows an external host transmitting a logic 1 and transmitting a logic 0 to the BKGD pin of a target system. The host is asynchronous to the target, so there is up to a one clock-cycle delay from the host-generated falling edge to where the target recognizes this edge as the beginning of the bit time. Ten target clock cycles later, the target senses the bit level on the BKGD pin. Internal glitch detect logic requires the pin be driven high no later that eight target clock cycles after the falling edge for a logic 1 transmission.

Since the host drives the high speedup pulses in these two cases, the rising edges look like digitally driven signals.

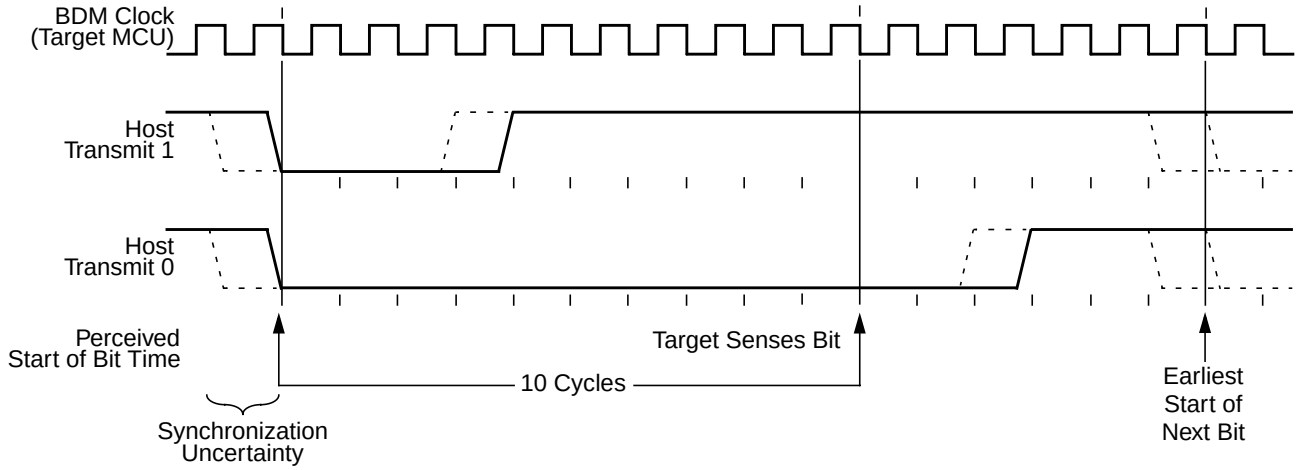

Figure 15-8. BDM Host-to-Target Serial Bit Timing

The receive cases are more complicated. Figure 15-9 shows the host receiving a logic 1 from the target system. Since the host is asynchronous to the target, there is up to one clock-cycle delay from the host-generated falling edge on BKGD to the perceived start of the bit time in the target. The host holds the BKGD pin low long enough for the target to recognize it (at least two target clock cycles). The host must release the low drive before the target drives a brief high speedup pulse seven target clock cycles after the perceived start of the bit time. The host should sample the bit level about 10 target clock cycles after it started the bit time.

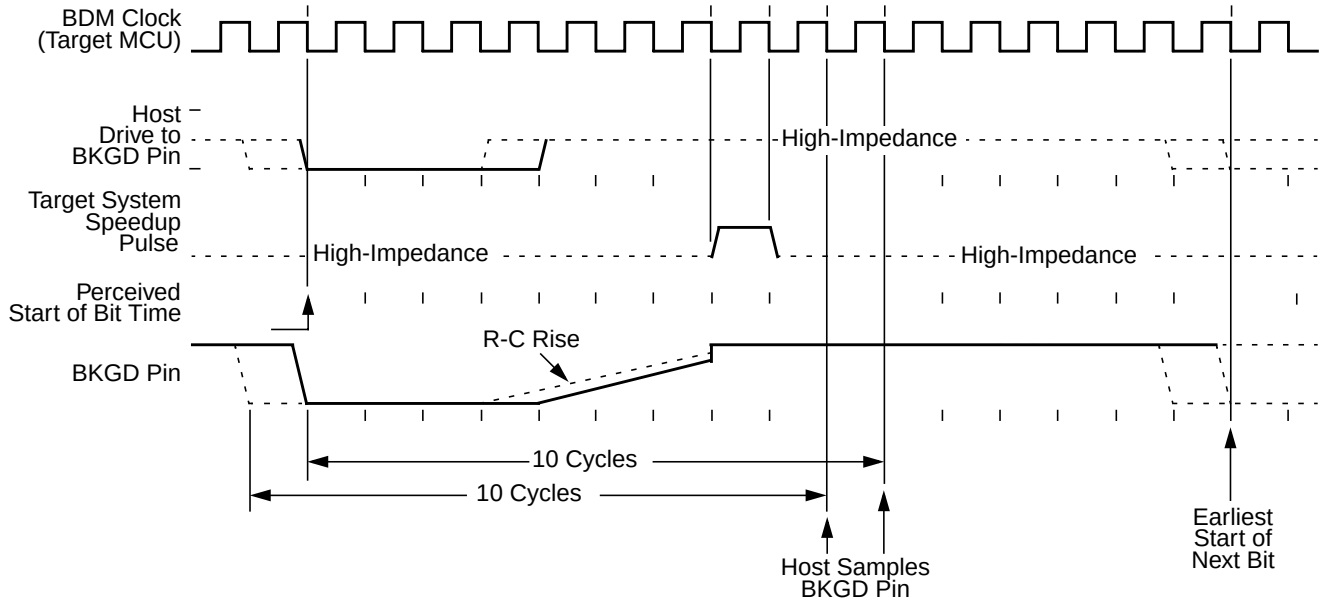

Figure 15-9. BDM Target-to-Host Serial Bit Timing (Logic 1)

Figure 15-10 shows the host receiving a logic 0 from the target. Since the host is asynchronous to the target, there is up to a one clock-cycle delay from the host-generated falling edge on BKGD to the start of the bit time as perceived by the target. The host initiates the bit time but the target finishes it. Since the target wants the host to receive a logic 0, it drives the BKGD pin low for 13 target clock cycles then briefly drives it high to speed up the rising edge. The host samples the bit level about 10 target clock cycles after starting the bit time.

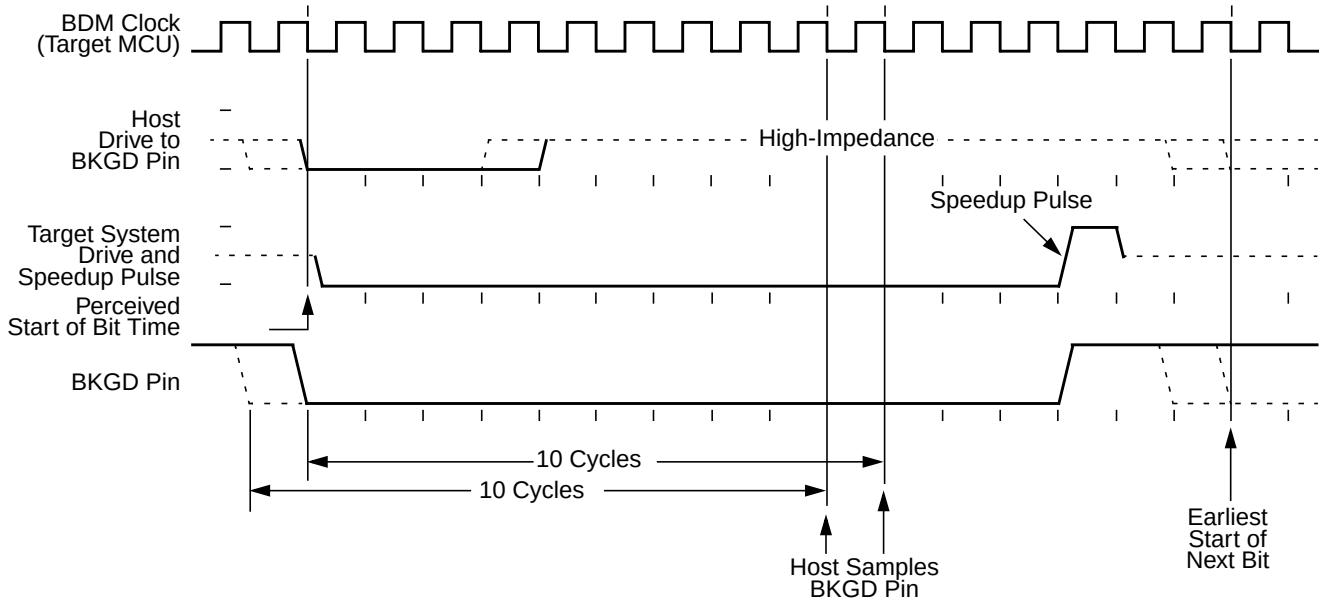

Figure 15-10. BDM Target-to-Host Serial Bit Timing (Logic 0)

15.4.7 Serial Interface Hardware Handshake Protocol

BDM commands that require CPU execution are ultimately treated at the MCU bus rate. Since the BDM clock source can be asynchronously related to the bus frequency, when CLKSW = 0, it is very helpful to provide a handshake protocol in which the host could determine when an issued command is executed by the CPU. The alternative is to always wait the amount of time equal to the appropriate number of cycles at the slowest possible rate the clock could be running. This sub-section will describe the hardware handshake protocol.

The hardware handshake protocol signals to the host controller when an issued command was successfully executed by the target. This protocol is implemented by a 16 serial clock cycle low pulse followed by a brief speedup pulse in the BKGD pin. This pulse is generated by the target MCU when a command, issued by the host, has been successfully executed (see Figure 15-11). This pulse is referred to as the ACK pulse. After the ACK pulse has finished: the host can start the bit retrieval if the last issued command was a read command, or start a new command if the last command was a write command or a control command (BACKGROUND, GO, GO_UNTIL or TRACE1). The ACK pulse is not issued earlier than 32 serial clock cycles after the BDM command was issued. The end of the BDM command is assumed to be the 16th tick of the last bit. This minimum delay assures enough time for the host to perceive the ACK pulse. Note also that, there is no upper limit for the delay between the command and the related ACK pulse, since the command execution depends upon the CPU bus frequency, which in some cases could be very slow

compared to the serial communication rate. This protocol allows a great flexibility for the POD designers, since it does not rely on any accurate time measurement or short response time to any event in the serial communication.

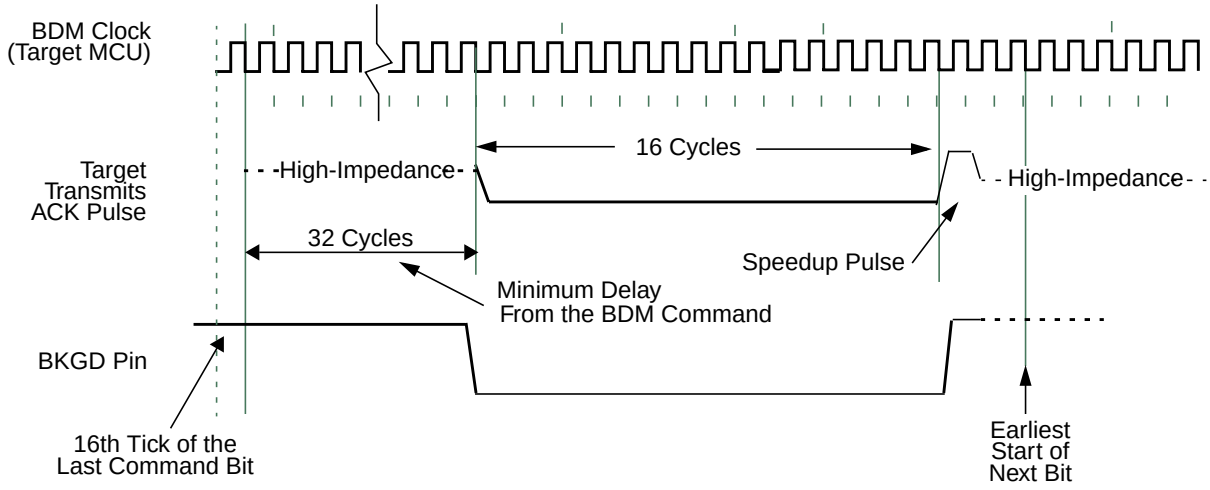

Figure 15-11. Target Acknowledge Pulse (ACK)

NOTE

If the ACK pulse was issued by the target, the host assumes the previous command was executed. If the CPU enters wait or stop prior to executing a hardware command, the ACK pulse will not be issued meaning that the BDM command was not executed. After entering wait or stop mode, the BDM command is no longer pending.

Figure 15-12 shows the ACK handshake protocol in a command level timing diagram. The READ_BYTE instruction is used as an example. First, the 8-bit instruction opcode is sent by the host, followed by the address of the memory location to be read. The target BDM decodes the instruction. A bus cycle is grabbed (free or stolen) by the BDM and it executes the READ_BYTE operation. Having retrieved the data, the BDM issues an ACK pulse to the host controller, indicating that the addressed byte is ready to be retrieved. After detecting the ACK pulse, the host initiates the byte retrieval process. Note that data is sent in the form of a word and the host needs to determine which is the appropriate byte based on whether the address was odd or even.

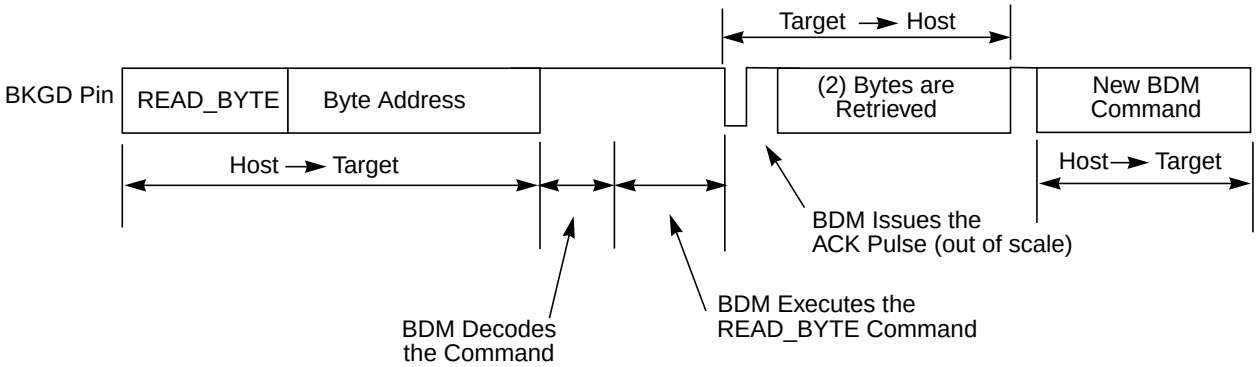

Figure 15-12. Handshake Protocol at Command Level

Differently from the normal bit transfer (where the host initiates the transmission), the serial interface ACK handshake pulse is initiated by the target MCU by issuing a negative edge in the BKGD pin. The hardware handshake protocol in Figure 15-11 specifies the timing when the BKGD pin is being driven, so the host should follow this timing constraint in order to avoid the risk of an electrical conflict in the BKGD pin.

NOTE

The only place the BKGD pin can have an electrical conflict is when one side is driving low and the other side is issuing a speedup pulse (high). Other "highs" are pulled rather than driven. However, at low rates the time of the speedup pulse can become lengthy and so the potential conflict time becomes longer as well.

The ACK handshake protocol does not support nested ACK pulses. If a BDM command is not acknowledge by an ACK pulse, the host needs to abort the pending command first in order to be able to issue a new BDM command. When the CPU enters wait or stop while the host issues a hardware command (e.g., WRITE_BYTE), the target discards the incoming command due to the wait or stop being detected. Therefore, the command is not acknowledged by the target, which means that the ACK pulse will not be issued in this case. After a certain time the host (not aware of stop or wait) should decide to abort any possible pending ACK pulse in order to be sure a new command can be issued. Therefore, the protocol provides a mechanism in which a command, and its corresponding ACK, can be aborted.

NOTE

The ACK pulse does not provide a time out. This means for the GO_UNTIL command that it can not be distinguished if a stop or wait has been executed (command discarded and ACK not issued) or if the "UNTIL" condition (BDM active) is just not reached yet. Hence in any case where the ACK pulse of a command is not issued the possible pending command should be aborted before issuing a new command. See the handshake abort procedure described in Section 15.4.8, "Hardware Handshake Abort Procedure".

15.4.8 Hardware Handshake Abort Procedure

The abort procedure is based on the SYNC command. In order to abort a command, which had not issued the corresponding ACK pulse, the host controller should generate a low pulse in the BKGD pin by driving it low for at least 128 serial clock cycles and then driving it high for one serial clock cycle, providing a speedup pulse. By detecting this long low pulse in the BKGD pin, the target executes the SYNC protocol, see Section 15.4.9, "SYNC — Request Timed Reference Pulse", and assumes that the pending command and therefore the related ACK pulse, are being aborted. Therefore, after the SYNC protocol has been completed the host is free to issue new BDM commands. For Firmware READ or WRITE commands it can not be guaranteed that the pending command is aborted when issuing a SYNC before the corresponding ACK pulse. There is a short latency time from the time the READ or WRITE access begins until it is finished and the corresponding ACK pulse is issued. The latency time depends on the firmware READ or WRITE command that is issued and if the serial interface is running on a different clock rate than the bus. When the SYNC command starts during this latency time the READ or WRITE command will not be aborted, but the corresponding ACK pulse will be aborted. A pending GO, TRACE1 or

GO_UNTIL command can not be aborted. Only the corresponding ACK pulse can be aborted by the SYNC command.

Although it is not recommended, the host could abort a pending BDM command by issuing a low pulse in the BKGD pin shorter than 128 serial clock cycles, which will not be interpreted as the SYNC command. The ACK is actually aborted when a negative edge is perceived by the target in the BKGD pin. The short abort pulse should have at least 4 clock cycles keeping the BKGD pin low, in order to allow the negative edge to be detected by the target. In this case, the target will not execute the SYNC protocol but the pending command will be aborted along with the ACK pulse. The potential problem with this abort procedure is when there is a conflict between the ACK pulse and the short abort pulse. In this case, the target may not perceive the abort pulse. The worst case is when the pending command is a read command (i.e., READ_BYTE). If the abort pulse is not perceived by the target the host will attempt to send a new command after the abort pulse was issued, while the target expects the host to retrieve the accessed memory byte. In this case, host and target will run out of synchronism. However, if the command to be aborted is not a read command the short abort pulse could be used. After a command is aborted the target assumes the next negative edge, after the abort pulse, is the first bit of a new BDM command.

NOTE

The details about the short abort pulse are being provided only as a reference for the reader to better understand the BDM internal behavior. It is not recommended that this procedure be used in a real application.

Since the host knows the target serial clock frequency, the SYNC command (used to abort a command) does not need to consider the lower possible target frequency. In this case, the host could issue a SYNC very close to the 128 serial clock cycles length. Providing a small overhead on the pulse length in order to assure the SYNC pulse will not be misinterpreted by the target. See Section 15.4.9, “SYNC — Request Timed Reference Pulse”.

Figure 15-13 shows a SYNC command being issued after a READ_BYTE, which aborts the READ_BYTE command. Note that, after the command is aborted a new command could be issued by the host computer.

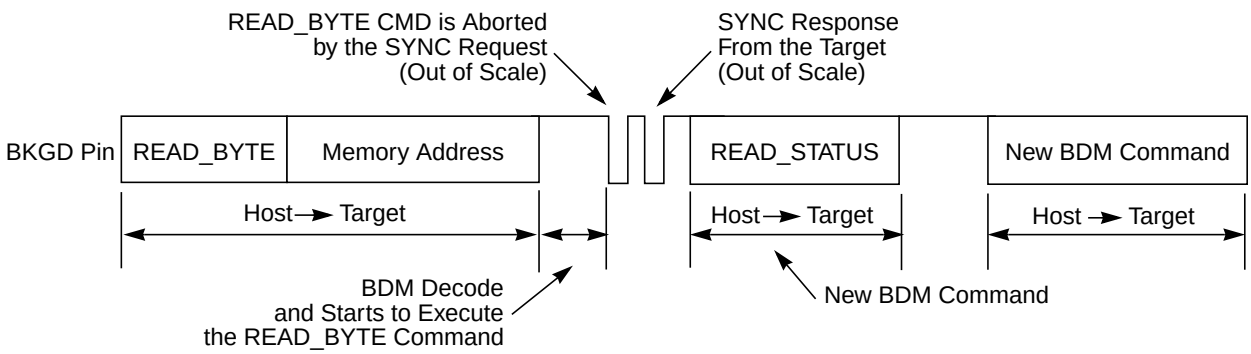

Figure 15-13. ACK Abort Procedure at the Command Level

NOTE

Figure 15-13 does not represent the signals in a true timing scale

Figure 15-14 shows a conflict between the ACK pulse and the SYNC request pulse. This conflict could occur if a POD device is connected to the target BKGD pin and the target is already in debug active mode. Consider that the target CPU is executing a pending BDM command at the exact moment the POD is being connected to the BKGD pin. In this case, an ACK pulse is issued along with the SYNC command. In this case, there is an electrical conflict between the ACK speedup pulse and the SYNC pulse. Since this is not a probable situation, the protocol does not prevent this conflict from happening.

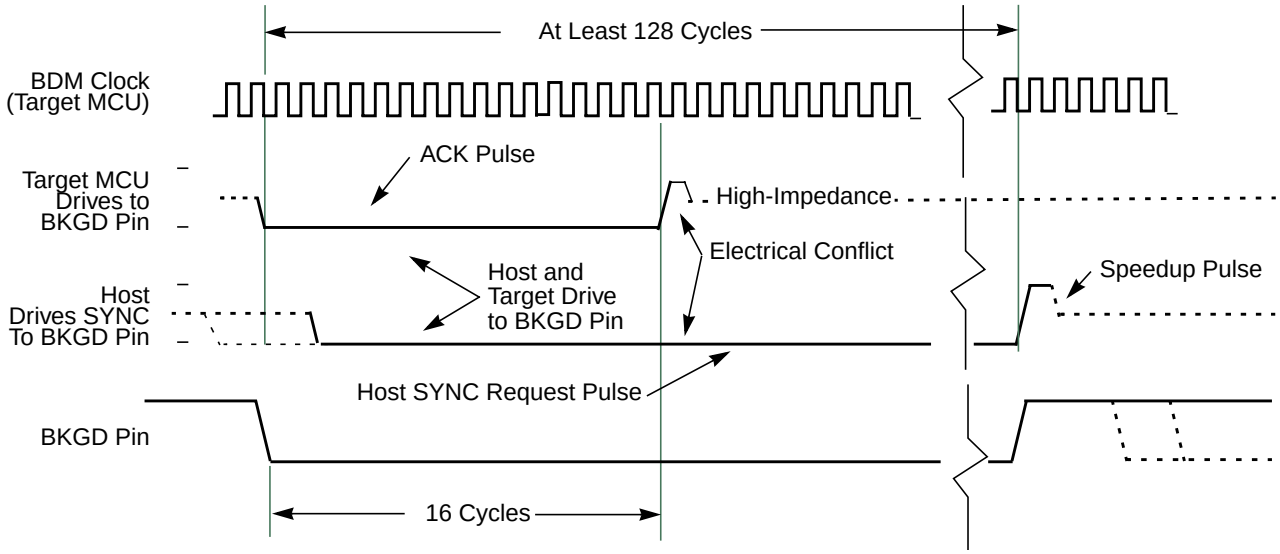

Figure 15-14. ACK Pulse and SYNC Request Conflict

NOTE

This information is being provided so that the MCU integrator will be aware that such a conflict could eventually occur.

The hardware handshake protocol is enabled by the ACK_ENABLE and disabled by the ACK_DISABLE BDM commands. This provides backwards compatibility with the existing POD devices which are not able to execute the hardware handshake protocol. It also allows for new POD devices, that support the hardware handshake protocol, to freely communicate with the target device. If desired, without the need for waiting for the ACK pulse.

The commands are described as follows:

- ACK_ENABLE — enables the hardware handshake protocol. The target will issue the ACK pulse when a CPU command is executed by the CPU. The ACK_ENABLE command itself also has the ACK pulse as a response.
- ACK_DISABLE — disables the ACK pulse protocol. In this case, the host needs to use the worst case delay time at the appropriate places in the protocol.

The default state of the BDM after reset is hardware handshake protocol disabled.

All the read commands will ACK (if enabled) when the data bus cycle has completed and the data is then ready for reading out by the BKGD serial pin. All the write commands will ACK (if enabled) after the data has been received by the BDM through the BKGD serial pin and when the data bus cycle is complete. See Section 15.4.3, “BDM Hardware Commands” and Section 15.4.4, “Standard BDM Firmware Commands” for more information on the BDM commands.

The ACK_ENABLE sends an ACK pulse when the command has been completed. This feature could be used by the host to evaluate if the target supports the hardware handshake protocol. If an ACK pulse is issued in response to this command, the host knows that the target supports the hardware handshake protocol. If the target does not support the hardware handshake protocol the ACK pulse is not issued. In this case, the ACK_ENABLE command is ignored by the target since it is not recognized as a valid command.

The BACKGROUND command will issue an ACK pulse when the CPU changes from normal to background mode. The ACK pulse related to this command could be aborted using the SYNC command.

The GO command will issue an ACK pulse when the CPU exits from background mode. The ACK pulse related to this command could be aborted using the SYNC command.

The GO_UNTIL command is equivalent to a GO command with exception that the ACK pulse, in this case, is issued when the CPU enters into background mode. This command is an alternative to the GO command and should be used when the host wants to trace if a breakpoint match occurs and causes the CPU to enter active background mode. Note that the ACK is issued whenever the CPU enters BDM, which could be caused by a breakpoint match or by a BGND instruction being executed. The ACK pulse related to this command could be aborted using the SYNC command.

The TRACE1 command has the related ACK pulse issued when the CPU enters background active mode after one instruction of the application program is executed. The ACK pulse related to this command could be aborted using the SYNC command.

15.4.9 SYNC — Request Timed Reference Pulse

The SYNC command is unlike other BDM commands because the host does not necessarily know the correct communication speed to use for BDM communications until after it has analyzed the response to the SYNC command. To issue a SYNC command, the host should perform the following steps:

1. Drive the BKGD pin low for at least 128 cycles at the lowest possible BDM serial communication frequency (the lowest serial communication frequency is determined by the crystal oscillator or the clock chosen by CLKSW.)
2. Drive BKGD high for a brief speedup pulse to get a fast rise time (this speedup pulse is typically one cycle of the host clock.)
3. Remove all drive to the BKGD pin so it reverts to high impedance.
4. Listen to the BKGD pin for the sync response pulse.

Upon detecting the SYNC request from the host, the target performs the following steps:

1. Discards any incomplete command received or bit retrieved.
2. Waits for BKGD to return to a logic one.
3. Delays 16 cycles to allow the host to stop driving the high speedup pulse.
4. Drives BKGD low for 128 cycles at the current BDM serial communication frequency.
5. Drives a one-cycle high speedup pulse to force a fast rise time on BKGD.
6. Removes all drive to the BKGD pin so it reverts to high impedance.

The host measures the low time of this 128 cycle SYNC response pulse and determines the correct speed for subsequent BDM communications. Typically, the host can determine the correct communication speed

within a few percent of the actual target speed and the communication protocol can easily tolerate speed errors of several percent.

As soon as the SYNC request is detected by the target, any partially received command or bit retrieved is discarded. This is referred to as a soft-reset, equivalent to a time-out in the serial communication. After the SYNC response, the target will consider the next negative edge (issued by the host) as the start of a new BDM command or the start of new SYNC request.

Another use of the SYNC command pulse is to abort a pending ACK pulse. The behavior is exactly the same as in a regular SYNC command. Note that one of the possible causes for a command to not be acknowledged by the target is a host-target synchronization problem. In this case, the command may not have been understood by the target and so an ACK response pulse will not be issued.

15.4.10 Instruction Tracing

When a TRACE1 command is issued to the BDM in active BDM, the CPU exits the standard BDM firmware and executes a single instruction in the user code. Once this has occurred, the CPU is forced to return to the standard BDM firmware and the BDM is active and ready to receive a new command. If the TRACE1 command is issued again, the next user instruction will be executed. This facilitates stepping or tracing through the user code one instruction at a time.

If an interrupt is pending when a TRACE1 command is issued, the interrupt stacking operation occurs but no user instruction is executed. Once back in standard BDM firmware execution, the program counter points to the first instruction in the interrupt service routine.

Be aware when tracing through the user code that the execution of the user code is done step by step but all peripherals are free running. Hence possible timing relations between CPU code execution and occurrence of events of other peripherals no longer exist.

Do not trace the CPU instruction BGND used for soft breakpoints. Tracing the BGND instruction will result in a return address pointing to BDM firmware address space.

When tracing through user code which contains stop or wait instructions the following will happen when the stop or wait instruction is traced:

> The CPU enters stop or wait mode and the TRACE1 command can not be finished before leaving the low power mode. This is the case because BDM active mode can not be entered after CPU executed the stop instruction. However all BDM hardware commands except the BACKGROUND command are operational after tracing a stop or wait instruction and still being in stop or wait mode. If system stop mode is entered (all bus masters are in stop mode) no BDM command is operational.
>
> As soon as stop or wait mode is exited the CPU enters BDM active mode and the saved PC value points to the entry of the corresponding interrupt service routine.
>
> In case the handshake feature is enabled the corresponding ACK pulse of the TRACE1 command will be discarded when tracing a stop or wait instruction. Hence there is no ACK pulse when BDM active mode is entered as part of the TRACE1 command after CPU exited from stop or wait mode. All valid commands sent during CPU being in stop or wait mode or after CPU exited from stop or wait mode will have an ACK pulse. The handshake feature becomes disabled only when system

stop mode has been reached. Hence after a system stop mode the handshake feature must be enabled again by sending the ACK_ENABLE command.

15.4.11 Serial Communication Time Out

The host initiates a host-to-target serial transmission by generating a falling edge on the BKGD pin. If BKGD is kept low for more than 128 target clock cycles, the target understands that a SYNC command was issued. In this case, the target will keep waiting for a rising edge on BKGD in order to answer the SYNC request pulse. If the rising edge is not detected, the target will keep waiting forever without any time-out limit.

Consider now the case where the host returns BKGD to logic one before 128 cycles. This is interpreted as a valid bit transmission, and not as a SYNC request. The target will keep waiting for another falling edge marking the start of a new bit. If, however, a new falling edge is not detected by the target within 512 clock cycles since the last falling edge, a time-out occurs and the current command is discarded without affecting memory or the operating mode of the MCU. This is referred to as a soft-reset.

If a read command is issued but the data is not retrieved within 512 serial clock cycles, a soft-reset will occur causing the command to be disregarded. The data is not available for retrieval after the time-out has occurred. This is the expected behavior if the handshake protocol is not enabled. However, consider the behavior where the BDM is running in a frequency much greater than the CPU frequency. In this case, the command could time out before the data is ready to be retrieved. In order to allow the data to be retrieved even with a large clock frequency mismatch (between BDM and CPU) when the hardware handshake protocol is enabled, the time out between a read command and the data retrieval is disabled. Therefore, the host could wait for more then 512 serial clock cycles and still be able to retrieve the data from an issued read command. However, once the handshake pulse (ACK pulse) is issued, the time-out feature is re-activated, meaning that the target will time out after 512 clock cycles. Therefore, the host needs to retrieve the data within a 512 serial clock cycles time frame after the ACK pulse had been issued. After that period, the read command is discarded and the data is no longer available for retrieval. Any negative edge in the BKGD pin after the time-out period is considered to be a new command or a SYNC request.

Note that whenever a partially issued command, or partially retrieved data, has occurred the time out in the serial communication is active. This means that if a time frame higher than 512 serial clock cycles is observed between two consecutive negative edges and the command being issued or data being retrieved is not complete, a soft-reset will occur causing the partially received command or data retrieved to be disregarded. The next negative edge in the BKGD pin, after a soft-reset has occurred, is considered by the target as the start of a new BDM command, or the start of a SYNC request pulse.

Chapter 16
Interrupt (S12XINTV1)

16.1 Introduction

The XINT module decodes the priority of all system exception requests and provides the applicable vector for processing the exception to either the CPU or the XGATE module. The XINT module supports:

- I bit and X bit maskable interrupt requests
- A non-maskable unimplemented opcode trap
- A non-maskable software interrupt (SWI) or background debug mode request
- A spurious interrupt vector request
- Three system reset vector requests

Each of the I bit maskable interrupt requests can be assigned to one of seven priority levels supporting a flexible priority scheme. For interrupt requests that are configured to be handled by the CPU, the priority scheme can be used to implement nested interrupt capability where interrupts from a lower level are automatically blocked if a higher level interrupt is being processed. Interrupt requests configured to be handled by the XGATE module cannot be nested because the XGATE module cannot be interrupted while processing.

NOTE

The HPRIO register and functionality of the XINT module is no longer supported, since it is superseded by the 7-level interrupt request priority scheme.

16.1.1 Glossary

The following terms and abbreviations are used in the document.

Table 16-1. Terminology

Term	Meaning
CCR	Condition Code Register (in the S12X CPU)
DMA	Direct Memory Access
INT	Interrupt
IPL	Interrupt Processing Level
ISR	Interrupt Service Routine
MCU	Micro-Controller Unit
XGATE	please refer to the "XGATE Block Guide"
$\overline{\text{IRQ}}$	refers to the interrupt request associated with the $\overline{\text{IRQ}}$ pin
$\overline{\text{XIRQ}}$	refers to the interrupt request associated with the $\overline{\text{XIRQ}}$ pin

16.1.2 Features

- Interrupt vector base register (IVBR)
- One spurious interrupt vector (at address vector base[1] + 0x0010).
- 2–113 I bit maskable interrupt vector requests (at addresses vector base + 0x0012–0x00F2).
- Each I bit maskable interrupt request has a configurable priority level and can be configured to be handled by either the CPU or the XGATE module[2].
- I bit maskable interrupts can be nested, depending on their priority levels.
- One X bit maskable interrupt vector request (at address vector base + 0x00F4).
- One non-maskable software interrupt request (SWI) or background debug mode vector request (at address vector base + 0x00F6).
- One non-maskable unimplemented opcode trap (TRAP) vector (at address vector base + 0x00F8).
- Three system reset vectors (at addresses 0xFFFA–0xFFFE).
- Determines the highest priority DMA and interrupt vector requests, drives the vector to the XGATE module or to the bus on CPU request, respectively.
- Wakes up the system from stop or wait mode when an appropriate interrupt request occurs or whenever $\overline{\text{XIRQ}}$ is asserted, even if X interrupt is masked.
- XGATE can wake up and execute code, even with the CPU remaining in stop or wait mode.

16.1.3 Modes of Operation

- Run mode

  This is the basic mode of operation.

1. The vector base is a 16-bit address which is accumulated from the contents of the interrupt vector base register (IVBR, used as upper byte) and 0x00 (used as lower byte).
2. The $\overline{\text{IRQ}}$ interrupt can only be handled by the CPU

- Wait mode

  In wait mode, the XINT module is frozen. It is however capable of either waking up the CPU if an interrupt occurs or waking up the XGATE if an XGATE request occurs. Please refer to Section 16.5.3, “Wake Up from Stop or Wait Mode” for details.
- Stop Mode

  In stop mode, the XINT module is frozen. It is however capable of either waking up the CPU if an interrupt occurs or waking up the XGATE if an XGATE request occurs. Please refer to Section 16.5.3, “Wake Up from Stop or Wait Mode” for details.
- Freeze mode (BDM active)

  In freeze mode (BDM active), the interrupt vector base register is overridden internally. Please refer to Section 16.3.1.1, “Interrupt Vector Base Register (IVBR)” for details.

16.1.4 Block Diagram

Figure 16-1 shows a block diagram of the XINT module.

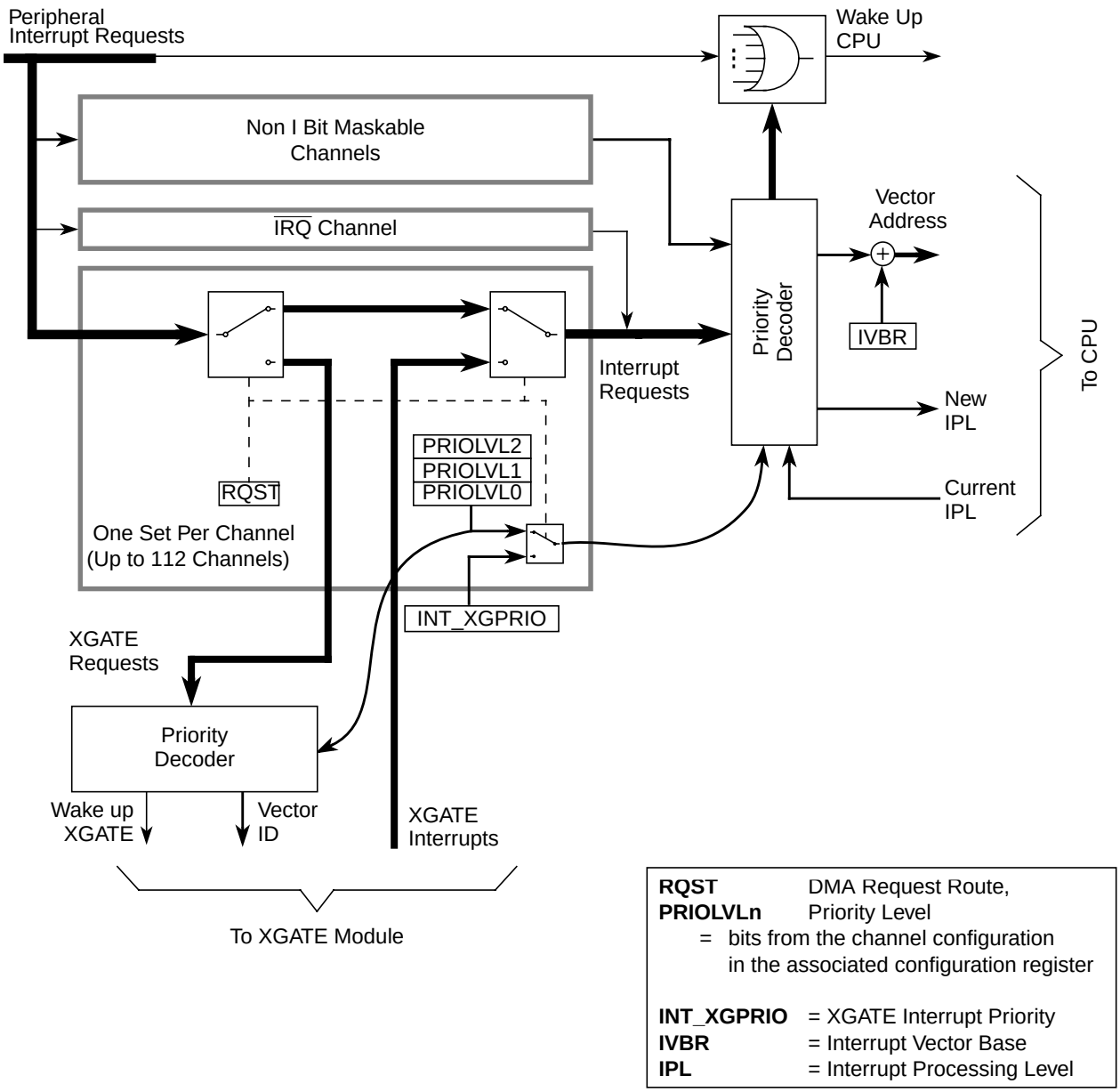

Figure 16-1. XINT Block Diagram

16.2 External Signal Description

The XINT module has no external signals.

16.3 Memory Map and Register Definition

This section provides a detailed description of all registers accessible in the XINT.

16.3.1 Register Descriptions

This section describes in address order all the XINT registers and their individual bits.

Address	Register Name		Bit 7	6	5	4	3	2	1	Bit 0
0x0121	IVBR	R W	IVB_ADDR[7:0]							
0x0126	INT_XGPRIO	R	0	0	0	0	0	XILVL[2:0]		
		W								
0x0127	INT_CFADDR	R	INT_CFADDR[7:4]				0	0	0	0
		W								
0x0128	INT_CFDATA0	R	RQST	0	0	0	0	PRIOLVL[2:0]		
		W								
0x0129	INT_CFDATA1	R	RQST	0	0	0	0	PRIOLVL[2:0]		
		W								
0x012A	INT_CFDATA2	R	RQST	0	0	0	0	PRIOLVL[2:0]		
		W								
0x012B	INT_CFDATA3	R	RQST	0	0	0	0	PRIOLVL[2:0]		
		W								
0x012C	INT_CFDATA4	R	RQST	0	0	0	0	PRIOLVL[2:0]		
		W								
0x012D	INT_CFDATA5	R	RQST	0	0	0	0	PRIOLVL[2:0]		
		W								
0x012E	INT_CFDATA6	R	RQST	0	0	0	0	PRIOLVL[2:0]		
		W								
0x012F	INT_CFDATA7	R	RQST	0	0	0	0	PRIOLVL[2:0]		
		W								

= Unimplemented or Reserved

Figure 16-2. XINT Register Summary

16.3.1.1 Interrupt Vector Base Register (IVBR)

Address: 0x0121

	7	6	5	4	3	2	1	0
R W	IVB_ADDR[7:0]							
Reset	1	1	1	1	1	1	1	1

Figure 16-3. Interrupt Vector Base Register (IVBR)

Read: Anytime

Write: Anytime

Table 16-2. IVBR Field Descriptions

Field	Description
7–0 IVB_ADDR[7:0]	**Interrupt Vector Base Address Bits** — These bits represent the upper byte of all vector addresses. Out of reset these bits are set to 0xFF (i.e., vectors are located at 0xFF10–0xFFFE) to ensure compatibility to HCS12. **Note:** A system reset will initialize the interrupt vector base register with “0xFF” before it is used to determine the reset vector address. Therefore, changing the IVBR has no effect on the location of the three reset vectors (0xFFFA–0xFFFE). **Note:** If the BDM is active (i.e., the CPU is in the process of executing BDM firmware code), the contents of IVBR are ignored and the upper byte of the vector address is fixed as “0xFF”.

16.3.1.2 XGATE Interrupt Priority Configuration Register (INT_XGPRIO)

Address: 0x0126

	7	6	5	4	3	2	1	0
R	0	0	0	0	0	XILVL[2:0]		
W								
Reset	0	0	0	0	0	0	0	1

= Unimplemented or Reserved

Figure 16-4. XGATE Interrupt Priority Configuration Register (INT_XGPRIO)

Read: Anytime

Write: Anytime

Table 16-3. INT_XGPRIO Field Descriptions

Field	Description
2–0 XILVL[2:0]	**XGATE Interrupt Priority Level** — The XILVL[2:0] bits configure the shared interrupt level of the DMA interrupts coming from the XGATE module. Out of reset the priority is set to the lowest active level (“1”).

Table 16-4. XGATE Interrupt Priority Levels

Priority	XILVL2	XILVL1	XILVL0	Meaning
	0	0	0	Interrupt request is disabled
low	0	0	1	Priority level 1
	0	1	0	Priority level 2
	0	1	1	Priority level 3
	1	0	0	Priority level 4
	1	0	1	Priority level 5
	1	1	0	Priority level 6
high	1	1	1	Priority level 7

16.3.1.3 Interrupt Request Configuration Address Register (INT_CFADDR)

Address: 0x0127

	7	6	5	4	3	2	1	0
R	INT_CFADDR[7:4]				0	0	0	0
W								
Reset	0	0	0	1	0	0	0	0

= Unimplemented or Reserved

Figure 16-5. Interrupt Configuration Address Register (INT_CFADDR)

Read: Anytime

Write: Anytime

Table 16-5. INT_CFADDR Field Descriptions

Field	Description
7–4 INT_CFADDR[7:4]	**Interrupt Request Configuration Data Register Select Bits** — These bits determine which of the 128 configuration data registers are accessible in the 8 register window at INT_CFDATA0–7. The hexadecimal value written to this register corresponds to the upper nibble of the lower byte of the interrupt vector, i.e., writing 0xE0 to this register selects the configuration data register block for the 8 interrupt vector requests starting with vector (vector base + 0x00E0) to be accessible as INT_CFDATA0–7. **Note:** Writing all 0s selects non-existing configuration registers. In this case write accesses to INT_CFDATA0–7 will be ignored and read accesses will return all 0.

16.3.1.4 Interrupt Request Configuration Data Registers (INT_CFDATA0–7)

The eight register window visible at addresses INT_CFDATA0–7 contains the configuration data for the block of eight interrupt requests (out of 128) selected by the interrupt configuration address register (INT_CFADDR) in ascending order. INT_CFDATA0 represents the interrupt configuration data register of the vector with the lowest address in this block, while INT_CFDATA7 represents the interrupt configuration data register of the vector with the highest address, respectively.

Address: 0x0128

	7	6	5	4	3	2	1	0
R	RQST	0	0	0	0	PRIOLVL[2:0]		
W								
Reset	0	0	0	0	0	0	0	1[1]

= Unimplemented or Reserved

Figure 16-6. Interrupt Request Configuration Data Register 0 (INT_CFDATA0)

[1] Please refer to the notes following the PRIOLVL[2:0] description below.

Address: 0x0129

	7	6	5	4	3	2	1	0
R	RQST	0	0	0	0	PRIOLVL[2:0]		
W								
Reset	0	0	0	0	0	0	0	1[1]

= Unimplemented or Reserved

Figure 16-7. Interrupt Request Configuration Data Register 1 (INT_CFDATA1)

[1] Please refer to the notes following the PRIOLVL[2:0] description below.

Address: 0x012A

	7	6	5	4	3	2	1	0
R	RQST	0	0	0	0	PRIOLVL[2:0]		
W								
Reset	0	0	0	0	0	0	0	1[1]

= Unimplemented or Reserved

Figure 16-8. Interrupt Request Configuration Data Register 2 (INT_CFDATA2)

[1] Please refer to the notes following the PRIOLVL[2:0] description below.

Address: 0x012B

	7	6	5	4	3	2	1	0
R	RQST	0	0	0	0	PRIOLVL[2:0]		
W								
Reset	0	0	0	0	0	0	0	1[1]

= Unimplemented or Reserved

Figure 16-9. Interrupt Request Configuration Data Register 3 (INT_CFDATA3)

[1] Please refer to the notes following the PRIOLVL[2:0] description below.

Address: 0x012C

	7	6	5	4	3	2	1	0
R	RQST	0	0	0	0	PRIOLVL[2:0]		
W								
Reset	0	0	0	0	0	0	0	1[1]

= Unimplemented or Reserved

Figure 16-10. Interrupt Request Configuration Data Register 4 (INT_CFDATA4)

[1] Please refer to the notes following the PRIOLVL[2:0] description below.

Address: 0x012D

	7	6	5	4	3	2	1	0
R	RQST	0	0	0	0	PRIOLVL[2:0]		
W								
Reset	0	0	0	0	0	0	0	1[1]

= Unimplemented or Reserved

Figure 16-11. Interrupt Request Configuration Data Register 5 (INT_CFDATA5)

[1] Please refer to the notes following the PRIOLVL[2:0] description below.

Address: 0x012E

	7	6	5	4	3	2	1	0
R	RQST	0	0	0	0	PRIOLVL[2:0]		
W								
Reset	0	0	0	0	0	0	0	1[1]

= Unimplemented or Reserved

Figure 16-12. Interrupt Request Configuration Data Register 6 (INT_CFDATA6)

[1] Please refer to the notes following the PRIOLVL[2:0] description below.

Address: 0x012F

	7	6	5	4	3	2	1	0
R	RQST	0	0	0	0	PRIOLVL[2:0]		
W								
Reset	0	0	0	0	0	0	0	1[1]

= Unimplemented or Reserved

Figure 16-13. Interrupt Request Configuration Data Register 7 (INT_CFDATA7)

[1] Please refer to the notes following the PRIOLVL[2:0] description below.

Read: Anytime

Write: Anytime

Table 16-6. INT_CFDATA0–7 Field Descriptions

Field	Description
7 RQST	**XGATE Request Enable** — This bit determines if the associated interrupt request is handled by the CPU or by the XGATE module. 0 Interrupt request is handled by the CPU 1 Interrupt request is handled by the XGATE module **Note:** The $\overline{IRQ}$ interrupt cannot be handled by the XGATE module. For this reason, the configuration register for vector (vector base + 0x00F2) = $\overline{IRQ}$ vector address) does not contain a RQST bit. Writing a 1 to the location of the RQST bit in this register will be ignored and a read access will return 0.
2–0 PRIOLVL[2:0]	**Interrupt Request Priority Level Bits** — The PRIOLVL[2:0] bits configure the interrupt request priority level of the associated interrupt request. Out of reset all interrupt requests are enabled at the lowest active level (“1”) to provide backwards compatibility with previous HCS12 interrupt controllers. Please also refer to Table 16-7 for available interrupt request priority levels. **Note:** Write accesses to configuration data registers of unused interrupt channels will be ignored and read accesses will return all 0. For information about what interrupt channels are used in a specific MCU, please refer to the Device User Guide of that MCU. **Note:** When vectors (vector base + 0x00F0–0x00FE) are selected by writing 0xF0 to INT_CFADDR, writes to INT_CFDATA2–7 (0x00F4–0x00FE) will be ignored and read accesses will return all 0s. The corresponding vectors do not have configuration data registers associated with them. **Note:** Write accesses to the configuration register for the spurious interrupt vector request (vector base + 0x0010) will be ignored and read accesses will return 0x07 (request is handled by the CPU, PRIOLVL = 7).

Table 16-7. Interrupt Priority Levels

Priority	PRIOLVL2	PRIOLVL1	PRIOLVL0	Meaning
	0	0	0	Interrupt request is disabled
low	0	0	1	Priority level 1
	0	1	0	Priority level 2
	0	1	1	Priority level 3
	1	0	0	Priority level 4
	1	0	1	Priority level 5
	1	1	0	Priority level 6
high	1	1	1	Priority level 7

16.4 Functional Description

The XINT module processes all exception requests to be serviced by the CPU module. These exceptions include interrupt vector requests and reset vector requests. Each of these exception types and their overall priority level is discussed in the subsections below.

16.4.1 S12X Exception Requests

The CPU handles both reset requests and interrupt requests. The XINT contains registers to configure the priority level of each I bit maskable interrupt request which can be used to implement an interrupt priority scheme. This also includes the possibility to nest interrupt requests. A priority decoder is used to evaluate the priority of a pending interrupt request.

16.4.2 Interrupt Prioritization

After system reset all interrupt requests with a vector address lower than or equal to (vector base + 0x00F2) are enabled, are set up to be handled by the CPU and have a pre-configured priority level of 1. The exception to this rule is the spurious interrupt vector request at (vector base + 0x0010) which cannot be disabled, is always handled by the CPU and has a fixed priority level of 7. A priority level of 0 effectively disables the associated interrupt request.

If more than one interrupt request is configured to the same interrupt priority level the interrupt request with the higher vector address wins the prioritization.

The following conditions must be met for an I bit maskable interrupt request to be processed.

1. The local interrupt enabled bit in the peripheral module must be set.
2. The setup in the configuration register associated with the interrupt request channel must meet the following conditions:
   a) The XGATE request enable bit must be 0 to have the CPU handle the interrupt request.
   b) The priority level must be set to non zero.
   c) The priority level must be greater than the current interrupt processing level in the condition code register (CCR) of the CPU (PRIOLVL[2:0] > IPL[2:0]).
3. The I bit in the condition code register (CCR) of the CPU must be cleared.
4. There is no SWI, TRAP, or $\overline{\text{XIRQ}}$ request pending.

NOTE

All non I bit maskable interrupt requests always have higher priority than I bit maskable interrupt requests. If an I bit maskable interrupt request is interrupted by a non I bit maskable interrupt request, the currently active interrupt processing level (IPL) remains unaffected. It is possible to nest non I bit maskable interrupt requests, e.g., by nesting SWI or TRAP calls.

16.4.2.1 Interrupt Priority Stack

The current interrupt processing level (IPL) is stored in the condition code register (CCR) of the CPU. This way the current IPL is automatically pushed to the stack by the standard interrupt stacking procedure. The new IPL is copied to the CCR from the priority level of the highest priority active interrupt request channel which is configured to be handled by the CPU. The copying takes place when the interrupt vector is fetched. The previous IPL is automatically restored by executing the RTI instruction.

16.4.3 XGATE Requests

The XINT module processes all exception requests to be serviced by the XGATE module. The overall priority level of those exceptions is discussed in the subsections below.

16.4.3.1 XGATE Request Prioritization

An interrupt request channel is configured to be handled by the XGATE module, if the RQST bit of the associated configuration register is set to 1 (please refer to Section 16.3.1.4, “Interrupt Request Configuration Data Registers (INT_CFDATA0–7)”). The priority level setting (PRIOLVL) for this channel becomes the DMA priority which will be used to determine the highest priority DMA request to be serviced next by the XGATE module. Additionally, DMA interrupts may be raised by the XGATE module by setting one or more of the XGATE channel interrupt flags (using the SIF instruction). This will result in an CPU interrupt with vector address vector base + (2 * channel ID number), where the channel ID number corresponds to the highest set channel interrupt flag, if the XGIE and channel RQST bits are set.

The shared interrupt priority for the DMA interrupt requests is taken from the XGATE interrupt priority configuration register (please refer to Section 16.3.1.2, “XGATE Interrupt Priority Configuration Register (INT_XGPRIO)”). If more than one DMA interrupt request channel becomes active at the same time, the channel with the highest vector address wins the prioritization.

16.4.4 Priority Decoders

The XINT module contains priority decoders to determine the priority for all interrupt requests pending for the respective target.

There are two priority decoders, one for each interrupt request target (CPU, XGATE module). The function of both priority decoders is basically the same with one exception: the priority decoder for the XGATE module does not take the current interrupt processing level into account because XGATE requests cannot be nested.

Because the vector is not supplied until the CPU requests it, it is possible that a higher priority interrupt request could override the original exception that caused the CPU to request the vector. In this case, the CPU will receive the highest priority vector and the system will process this exception instead of the original request.

If the interrupt source is unknown (for example, in the case where an interrupt request becomes inactive after the interrupt has been recognized, but prior to the vector request), the vector address supplied to the CPU will default to that of the spurious interrupt vector.

NOTE

Care must be taken to ensure that all exception requests remain active until the system begins execution of the applicable service routine; otherwise, the exception request may not get processed at all or the result may be a spurious interrupt request (vector at address (vector base + 0x0010)).

16.4.5 Reset Exception Requests

The XINT supports three system reset exception request types (please refer to CRG for details):

1. Pin reset, power-on reset, low-voltage reset, or illegal address reset
2. Clock monitor reset request
3. COP watchdog reset request

16.4.6 Exception Priority

The priority (from highest to lowest) and address of all exception vectors issued by the XINT upon request by the CPU is shown in Table 16-8.

Table 16-8. Exception Vector Map and Priority

Vector Address[1]	Source
0xFFFE	Pin reset, power-on reset, low-voltage reset, illegal address reset
0xFFFC	Clock monitor reset
0xFFFA	COP watchdog reset
(Vector base + 0x00F8)	Unimplemented opcode trap
(Vector base + 0x00F6)	Software interrupt instruction (SWI) or BDM vector request
(Vector base + 0x00F4)	$\overline{\text{XIRQ}}$ interrupt request
(Vector base + 0x00F2)	$\overline{\text{IRQ}}$ interrupt request
(Vector base + 0x00F0–0x0012)	Device specific I bit maskable interrupt sources (priority determined by the associated configuration registers, in descending order)
(Vector base + 0x0010)	Spurious interrupt

[1] 16 bits vector address based

16.5 Initialization/Application Information

16.5.1 Initialization

After system reset, software should:

- Initialize the interrupt vector base register if the interrupt vector table is not located at the default location (0xFF10–0xFFF9).
- Initialize the interrupt processing level configuration data registers (INT_CFADDR, INT_CFDATA0–7) for all interrupt vector requests with the desired priority levels and the request target (CPU or XGATE module). It might be a good idea to disable unused interrupt requests.
- If the XGATE module is used, setup the XGATE interrupt priority register (INT_XGPRIO) and configure the XGATE module (please refer the XGATE Block Guide for details).
- Enable I maskable interrupts by clearing the I bit in the CCR.
- Enable the X maskable interrupt by clearing the X bit in the CCR (if required).

16.5.2 Interrupt Nesting

The interrupt request priority level scheme makes it possible to implement priority based interrupt request nesting for the I bit maskable interrupt requests handled by the CPU.

- I bit maskable interrupt requests can be interrupted by an interrupt request with a higher priority, so that there can be up to seven nested I bit maskable interrupt requests at a time (refer to Figure 16-14 for an example using up to three nested interrupt requests).

I bit maskable interrupt requests cannot be interrupted by other I bit maskable interrupt requests per default. In order to make an interrupt service routine (ISR) interruptible, the ISR must explicitly clear the I bit in the CCR (CLI). After clearing the I bit, I bit maskable interrupt requests with higher priority can interrupt the current ISR.

An ISR of an interruptible I bit maskable interrupt request could basically look like this:

- Service interrupt, e.g., clear interrupt flags, copy data, etc.
- Clear I bit in the CCR by executing the instruction CLI (thus allowing interrupt requests with higher priority)
- Process data
- Return from interrupt by executing the instruction RTI

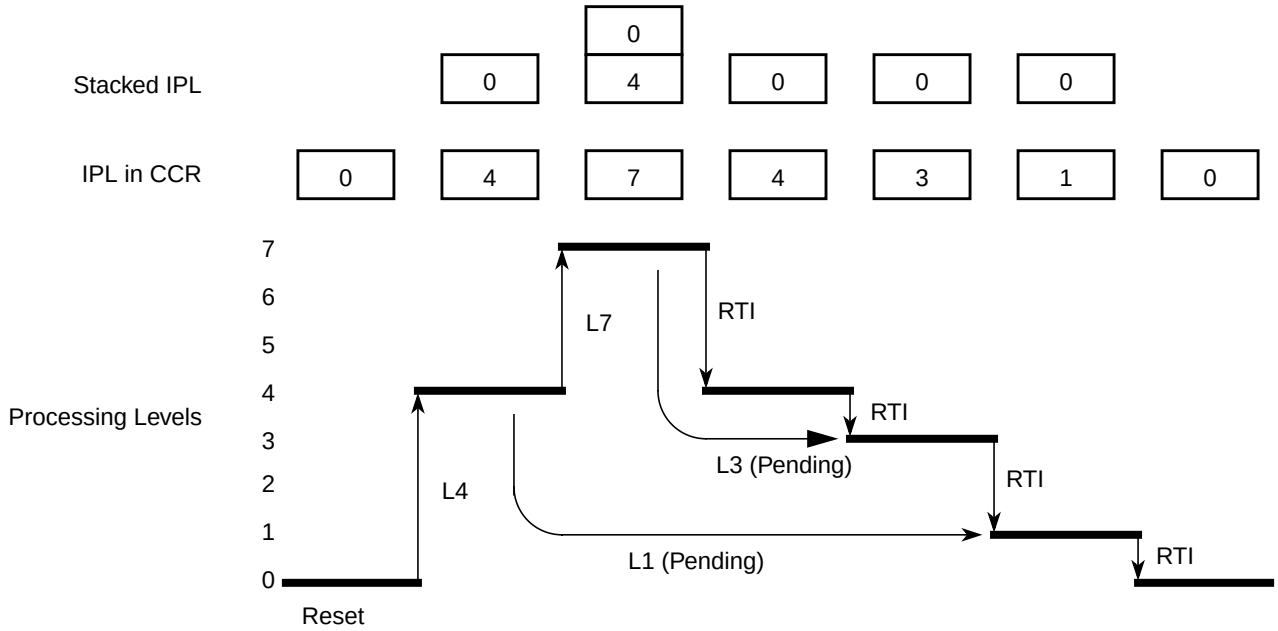

Figure 16-14. Interrupt Processing Example

16.5.3 Wake Up from Stop or Wait Mode

16.5.3.1 CPU Wake Up from Stop or Wait Mode

Every I bit maskable interrupt request which is configured to be handled by the CPU is capable of waking the MCU from stop or wait mode. To determine whether an I bit maskable interrupts is qualified to wake up the CPU or not, the same settings as in normal run mode are applied during stop or wait mode:

- If the I bit in the CCR is set, all I bit maskable interrupts are masked from waking up the MCU.
- An I bit maskable interrupt is ignored if it is configured to a priority level below or equal to the current IPL in CCR.
- I bit maskable interrupt requests which are configured to be handled by the XGATE are not capable of waking up the CPU.

An $\overline{\text{XIRQ}}$ request can wake up the MCU from stop or wait mode at anytime, even if the X bit in CCR is set.

16.5.3.2 XGATE Wake Up from Stop or Wait Mode

Interrupt request channels which are configured to be handled by the XGATE are capable of waking up the XGATE. Interrupt request channels handled by the XGATE do not affect the state of the CPU.

Chapter 17
Memory Mapping Control (S12XMMCV2)

17.1 Introduction

This section describes the functionality of the module mapping control (MMC) sub-block of the S12X platform. The block diagram of the MMC is shown in Figure 1-1.

The MMC module controls the multi-master priority accesses, the selection of internal resources and external space. Internal buses including internal memories and peripherals are controlled in this module. The local address space for each master is translated to a global memory space.

17.1.1 Features

The main features of this block are:

- Paging capability to support a global 8 Mbytes memory address space
- Bus arbitration between the masters CPU, BDM, and XGATE
- Simultaneous accesses to different resources[1] (internal, external, and peripherals) (see Figure 1-1)
- Resolution of target bus access collision
- Access restriction control from masters to some targets (e.g., RAM write access protection for user specified areas)
- MCU operation mode control
- MCU security control
- Separate memory map schemes for each master CPU, BDM, and XGATE
- ROM control bits to enable the on-chip FLASH or ROM selection
- Port replacement registers access control
- Generation of system reset when CPU accesses an unimplemented address (i.e., an address which does not belong to any of the on-chip modules) in single-chip modes

17.1.2 Modes of Operation

This subsection lists and briefly describes all operating modes supported by the MMC.

17.1.2.1 Power Saving Modes

- Run mode

  MMC is functional during normal run mode.

1. Resources are also called targets.

- Wait mode
  MMC is functional during wait mode.
- Stop mode
  MMC is inactive during stop mode.

17.1.2.2 Functional Modes

- Single chip modes
  In normal and special single chip mode the internal memory is used. External bus is not active.
- Expanded modes
  Address, data, and control signals are activated in normal expanded and special test modes when accessing the external bus.
- Emulation modes
  External bus is active to emulate via an external tool the normal expanded or the normal single chip mode.

17.1.3 Block Diagram

Figure 1-1 shows a block diagram of the MMC.

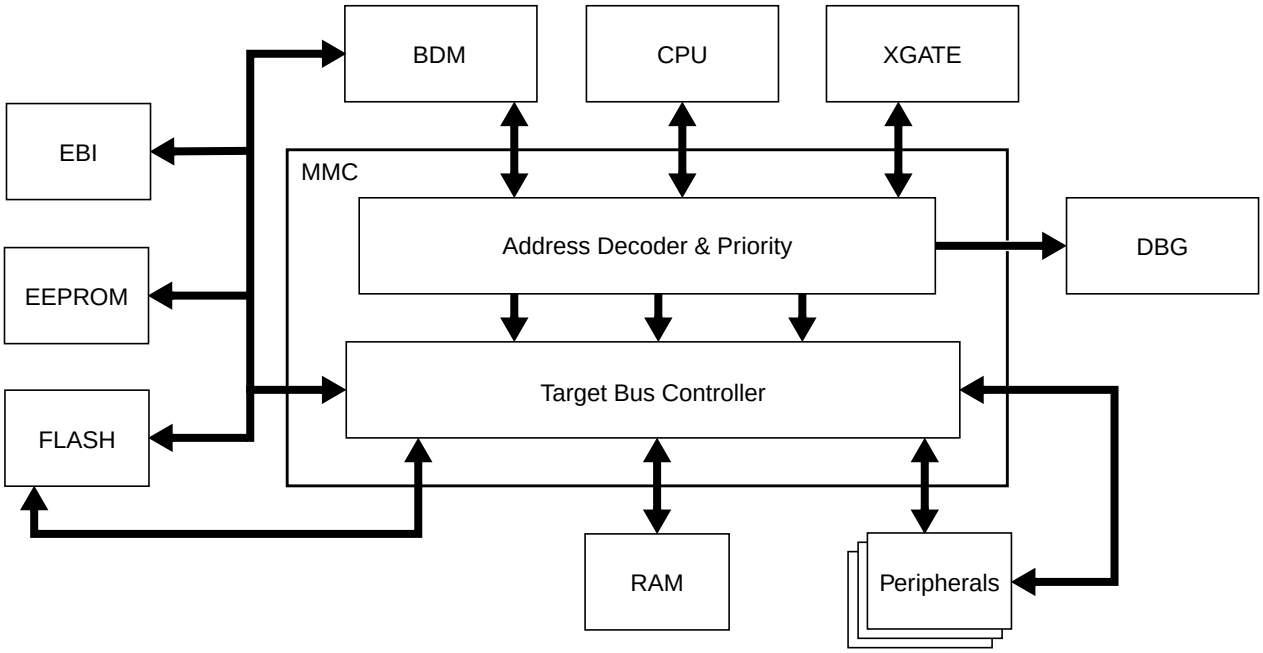

Figure 17-1. MMC Block Diagram

17.2 External Signal Description

The user is advised to refer to the SoC Guide for port configuration and location of external bus signals. Some pins may not be bonded out in all implementations.

Table 1-2 and Table 1-3 outline the pin names and functions. It also provides a brief description of their operation.

Table 17-1. External Input Signals Associated with the MMC

Signal	I/O	Description	Availability
MODC	I	Mode input	Latched after $\overline{\text{RESET}}$ (active low)
MODB	I	Mode input	
MODA	I	Mode input	
EROMCTL	I	EROM control input	
ROMCTL	I	ROM control input	

Table 17-2. External Output Signals Associated with the MMC

Signal	I/O	Description	Available in Modes					
			NS	SS	NX	ES	EX	ST
CS0	O	Chip select line 0	(see Table 1-4)					
CS1	O	Chip select line 1						
CS2	O	Chip select line 2						
CS3	O	Chip select line 3						

17.3 Memory Map and Registers

17.3.1 Module Memory Map

A summary of the registers associated with the MMC block is shown in Figure 1-2. Detailed descriptions of the registers and bits are given in the subsections that follow.

Address	Register Name		Bit 7	6	5	4	3	2	1	Bit 0
0x000A	MMCCTL0	R	0	0	0	0	CS3E	CS2E	CS1E	CS0E
		W								
0x000B	MODE	R	MODC	MODB	MODA	0	0	0	0	0
		W								
0x0010	GPAGE	R	0	GP6	GP5	GP4	GP3	GP2	GP1	GP0
		W								
0x0011	DIRECT	R	DP15	DP14	DP13	DP12	DP11	DP10	DP9	DP8
		W								
0x0012	Reserved	R	0	0	0	0	0	0	0	0
		W								
0x0013	MMCCTL1	R	0	0	0	0	0	EROMON	ROMHM	ROMON
		W								
0x0014	Reserved	R	0	0	0	0	0	0	0	0
		W								
0x0015	Reserved	R	0	0	0	0	0	0	0	0
		W								
0x0016	RPAGE	R	RP7	RP6	RP5	RP4	RP3	RP2	RP1	RP0
		W								
0x0017	EPAGE	R	EP7	EP6	EP5	EP4	EP3	EP2	EP1	EP0
		W								
0x0030	PPAGE	R	PIX7	PIX6	PIX5	PIX4	PIX3	PIX2	PIX1	PIX0
		W								
0x0031	Reserved	R	0	0	0	0	0	0	0	0
		W								

= Unimplemented or Reserved

Figure 17-2. MMC Register Summary

Address	Register Name		Bit 7	6	5	4	3	2	1	Bit 0
0x011C	RAMWPC	R	RPWE	0	0	0	0	0	AVIE	AVIF
		W								
0x011D	RAMXGU	R	1	XGU6	XGU5	XGU4	XGU3	XGU2	XGU1	XGU0
		W								
0x011E	RAMSHL	R	1	SHL6	SHL5	SHL4	SHL3	SHL2	SHL1	SHL0
		W								
0x011F	RAMSHU	R	1	SHU6	SHU5	SHU4	SHU3	SHU2	SHU1	SHU0
		W								

= Unimplemented or Reserved

Figure 17-2. MMC Register Summary

17.3.2 Register Descriptions

17.3.2.1 MMC Control Register (MMCCTL0)

Address: 0x000A PRR

	7	6	5	4	3	2	1	0
R	0	0	0	0	CS3E	CS2E	CS1E	CS0E
W								
Reset	0	0	0	0	0	0	0	$\overline{\text{ROMON}}$[1]

1. ROMON is bit[0] of the register MMCTL1 (see Figure 1-10)

= Unimplemented or Reserved

Figure 17-3. MMC Control Register (MMCCTL0)

Read: Anytime. In emulation modes read operations will return the data from the external bus. In all other modes the data is read from this register.

Write: Anytime. In emulation modes write operations will also be directed to the external bus.

Table 17-3. Chip Selects Function Activity

Register Bit	Chip Modes					
	NS	SS	NX	ES	EX	ST
CS3E, CS2E, CS1E, CS0E	Disabled[1]	Disabled	Enabled[2]	Disabled	Enabled	Enabled

[1] Disabled: feature always inactive.

[2] Enabled: activity is controlled by the appropriate register bit value.

The MMCCTL0 register is used to control external bus functions, i.e., availability of chip selects.

CAUTION

XGATE write access to this register during an CPU access which makes use of this register could lead to unexpected results.

Table 17-4. MMCCTL0 Field Descriptions

Field	Description
3–0 CS[3:0]E	**Chip Select Enables** — Each of these bits enables one of the external chip selects $\overline{CS3}$, $\overline{CS2}$, $\overline{CS1}$, and $\overline{CS0}$ outputs which are asserted during accesses to specific external addresses. The associated global address ranges are shown in Table 1-6 and Table 1-21 and Figure 1-23. Chip selects are only active if enabled in normal expanded mode, Emulation expanded mode and special test mode. The function disabled in all other operating modes. 0 Chip select is disabled 1 Chip select is enabled

Table 17-5. Chip Select Signals

Global Address Range	Asserted Signal
0x00_0800–0x0F_FFFF	$\overline{CS3}$
0x10_0000–0x1F_FFFF	$\overline{CS2}$
0x20_0000–0x3F_FFFF	$\overline{CS1}$
0x40_0000–0x7F_FFFF	$\overline{CS0}$[1]

[1] When the internal NVM is enabled (see ROMON in Section 1.3.2.5, “MMC Control Register (MMCCTL1)”) the $\overline{CS0}$ is not asserted in the space occupied by this on-chip memory block.

17.3.2.2 Mode Register (MODE)

Address: 0x000B PRR

	7	6	5	4	3	2	1	0
R	MODC	MODB	MODA	0	0	0	0	0
W								
Reset	MODC[1]	MODB[1]	MODA[1]	0	0	0	0	0

1. External signal (see Table 1-2).

= Unimplemented or Reserved

Figure 17-4. Mode Register (MODE)

Read: Anytime. In emulation modes read operations will return the data read from the external bus. In all other modes the data are read from this register.

Write: Only if a transition is allowed (see Figure 1-5). In emulation modes write operations will be also directed to the external bus.

The MODE bits of the MODE register are used to establish the MCU operating mode.

CAUTION

XGATE write access to this register during an CPU access which makes use of this register could lead to unexpected results.

Table 17-6. MODE Field Descriptions

Field	Description
7–5 MODC, MODB, MODA	**Mode Select Bits** — These bits control the current operating mode during $\overline{\text{RESET}}$ high (inactive). The external mode pins MODC, MODB, and MODA determine the operating mode during $\overline{\text{RESET}}$ low (active). The state of the pins is latched into the respective register bits after the $\overline{\text{RESET}}$ signal goes inactive (see Figure 1-5). Write restrictions exist to disallow transitions between certain modes. Figure 1-5 illustrates all allowed mode changes. Attempting non authorized transitions will not change the MODE bits, but it will block further writes to these register bits except in special modes. Both transitions from normal single-chip mode to normal expanded mode and from emulation single-chip to emulation expanded mode are only executed by writing a value of 0b101 (write once). Writing any other value will not change the MODE bits, but will block further writes to these register bits. Changes of operating modes are not allowed when the device is secured, but it will block further writes to these register bits except in special modes. In emulation modes reading this address returns data from the external bus which has to be driven by the emulator. It is therefore responsibility of the emulator hardware to provide the expected value (i.e. a value corresponding to normal single chip mode while the device is in emulation single-chip mode or a value corresponding to normal expanded mode while the device is in emulation expanded mode).

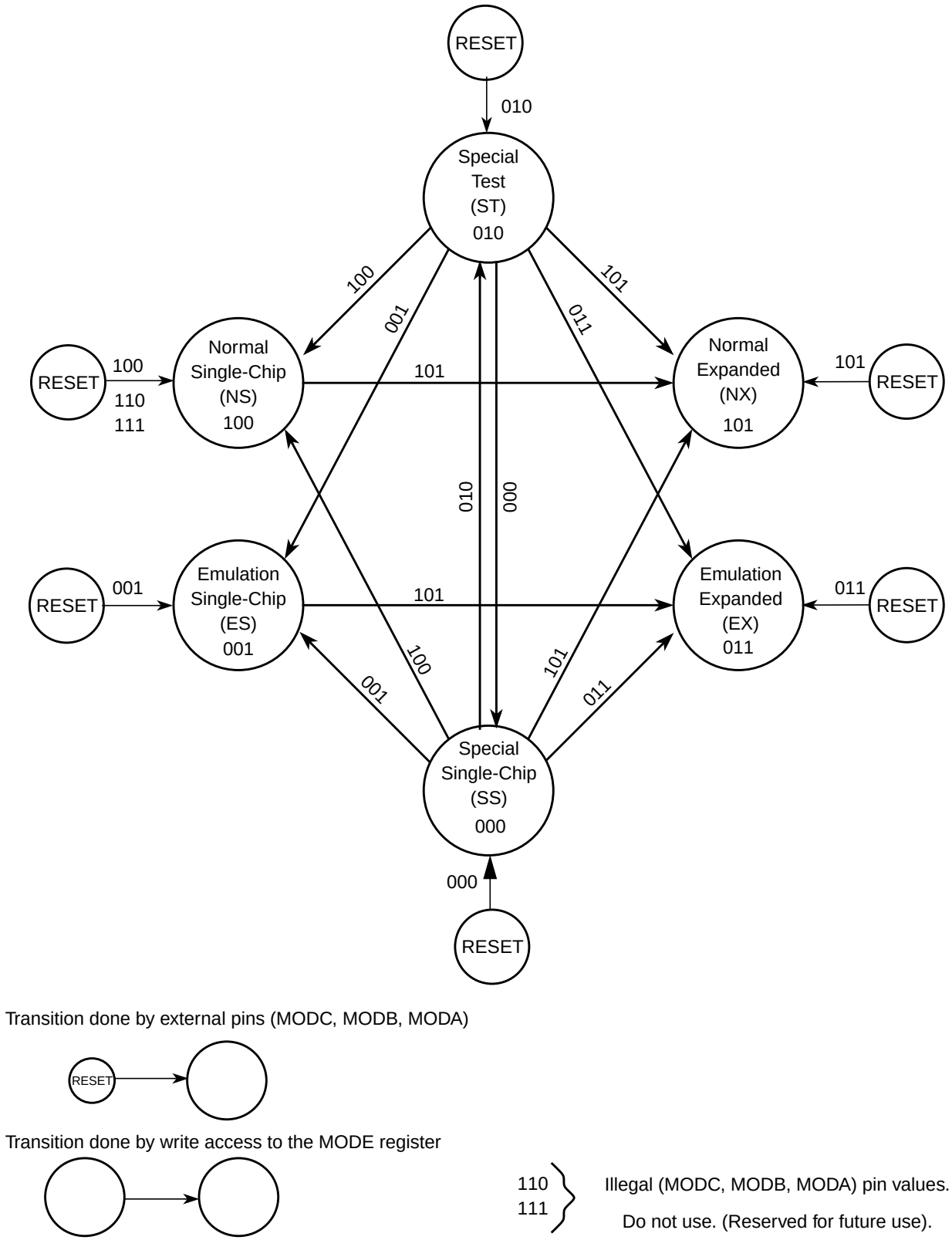

Figure 17-5. Mode Transition Diagram when MCU is Unsecured

17.3.2.3 Global Page Index Register (GPAGE)

Address: 0x0010

	7	6	5	4	3	2	1	0
R	0	GP6	GP5	GP4	GP3	GP2	GP1	GP0
W								
Reset	0	0	0	0	0	0	0	0

= Unimplemented or Reserved

Figure 17-6. Global Page Index Register (GPAGE)

Read: Anytime

Write: Anytime

The global page index register is used only when the CPU is executing a global instruction (GLDAA, GLDAB, GLDD, GLDS, GLDX, GLDY,GSTAA, GSTAB, GSTD, GSTS, GSTX, GSTY) (see CPU Block Guide). The generated global address is the result of concatenation of the CPU local address [15:0] with the GPAGE register [22:16] (see Figure 1-7).

CAUTION

XGATE write access to this register during an CPU access which makes use of this register could lead to unexpected results.

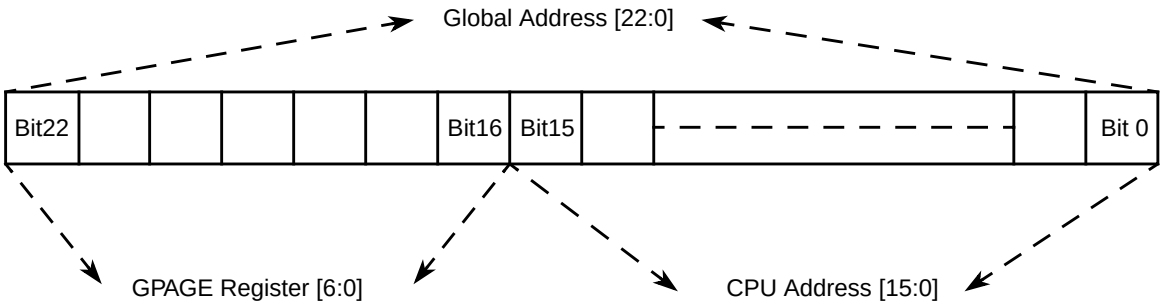

Figure 17-7. GPAGE Address Mapping

Table 17-7. GPAGE Field Descriptions

Field	Description
6–0 GP[6:0]	**Global Page Index Bits 6–0** — These page index bits are used to select which of the 128 64-kilobyte pages is to be accessed.

Example 17-1. This example demonstrates usage of the GPAGE register

```
LDAADR   EQU $5000        ;Initialize LDADDR to the value of $5000
MOVB     #$14, GPAGE      ;Initialize GPAGE register with the value of $14
GLDAA    >LDAADR          ;Load Accu A from the global address $14_5000
```

17.3.2.4 Direct Page Register (DIRECT)

Address: 0x0011

	7	6	5	4	3	2	1	0
R W	DP15	DP14	DP13	DP12	DP11	DP10	DP9	DP8
Reset	0	0	0	0	0	0	0	0

Figure 17-8. Direct Register (DIRECT)

Read: Anytime

Write: anytime in special modes, one time only in other modes.

This register determines the position of the direct page within the memory map.

Table 17-8. DIRECT Field Descriptions

Field	Description
7–0 DP[15:8]	**Direct Page Index Bits 15–8** — These bits are used by the CPU when performing accesses using the direct addressing mode. The bits from this register form bits [15:8] of the address (see Figure 1-9).

CAUTION

XGATE write access to this register during an CPU access which makes use of this register could lead to unexpected results.

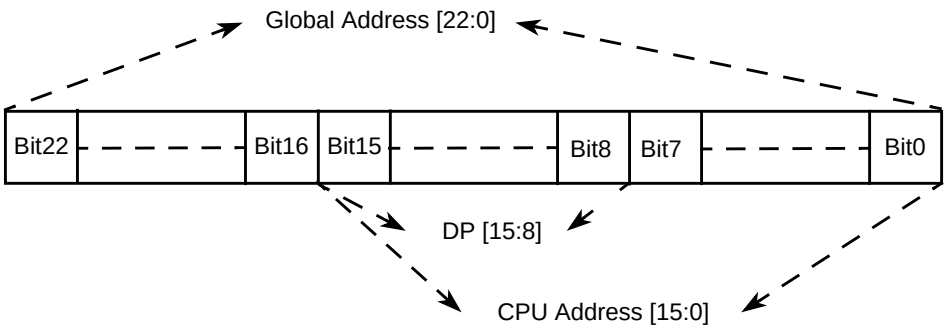

Figure 17-9. DIRECT Address Mapping

Bits [22:16] of the global address will be formed by the GPAGE[6:0] bits in case the CPU executes a global instruction in direct addressing mode or by the appropriate local address to the global address expansion (refer to Expansion of the CPU Local Address Map).

Example 17-2. This example demonstrates usage of the Direct Addressing Mode by a global instruction

```
LDAADR   EQU $0000        ;Initialize LDADDR with the value of $0000
MOVB     #$80,DIRECT      ;Initialize DIRECT register with the value of $80
MOVB     #$14,GPAGE       ;Initialize GPAGE register with the value of $14
GLDAA    <LDAADR          ;Load Accu A from the global address $14_8000
```

17.3.2.5 MMC Control Register (MMCCTL1)

Address: 0x0013 PRR

	7	6	5	4	3	2	1	0
R	0	0	0	0	0	EROMON	ROMHM	ROMON
W								
Reset	0	0	0	0	0	EROMCTL	0	ROMCTL

= Unimplemented or Reserved

Figure 17-10. MMC Control Register (MMCCTL1)

Read: Anytime. In emulation modes read operations will return the data from the external bus. In all other modes the data are read from this register.

Write: Refer to each bit description. In emulation modes write operations will also be directed to the external bus.

CAUTION

XGATE write access to this register during an CPU access which makes use of this register could lead to unexpected results.

Table 17-9. MMCCTL1 Field Descriptions

Field	Description
2 EROMON	**Enables emulated Flash or ROM memory in the memory map** Write: Never 0 Disables the emulated Flash or ROM in the memory map. 1 Enables the emulated Flash or ROM in the memory map.
1 ROMHM	**FLASH or ROM only in higher Half of Memory Map** Write: Once in normal and emulation modes and anytime in special modes 0 The fixed page of Flash or ROM can be accessed in the lower half of the memory map. Accesses to $4000–$7FFF will be mapped to $7F_4000-$7F_7FFF in the global memory space. 1 Disables access to the Flash or ROM in the lower half of the memory map.These physical locations of the Flash or ROM can still be accessed through the program page window. Accesses to $4000–$7FFF will be mapped to 14_4000-14_7FFF in the global memory space (external access).
0 ROMON	**Enable FLASH or ROM in the memory map** Write: Once in normal and emulation modes and anytime in special modes 0 Disables the Flash or ROM from the memory map. 1 Enables the Flash or ROM in the memory map.

EROMON and ROMON control the visibility of the Flash in the memory map for CPU or BDM (not for XGATE). Both local and global memory maps are affected.

Table 17-10. Data Sources when CPU or BDM is Accessing Flash Area

Chip Modes	ROMON	EROMON	DATA SOURCE[1]	Stretch[2]
Normal Single Chip	X	X	Internal	N
Special Single Chip				
Emulation Single Chip	X	0	Emulation Memory	N
	X	1	Internal Flash	
Normal Expanded	0	X	External Application	Y
	1	X	Internal Flash	N
Emulation Expanded	0	X	External Application	Y
	1	0	Emulation Memory	N
	1	1	Internal Flash	
Special Test	0	X	External Application	N
	1	X	Internal Flash	

1 Internal means resources inside the MCU are read/written.
Internal Flash means Flash resources inside the MCU are read/written.
Emulation memory means resources inside the emulator are read/written (PRU registers, flash replacement, RAM, EEPROM and register space are always considered internal).
External application means resources residing outside the MCU are read/written.

2 The external access stretch mechanism is part of the EBI module (refer to EBI Block Guide for details).

17.3.2.6 RAM Page Index Register (RPAGE)

Address: 0x0016

	7	6	5	4	3	2	1	0
R W	RP7	RP6	RP5	RP4	RP3	RP2	RP1	RP0
Reset	1	1	1	1	1	1	0	1

Figure 17-11. RAM Page Index Register (RPAGE)

Read: Anytime

Write: Anytime

The RAM page index register allows accessing up to (1M minus 2K) bytes of RAM in the global memory map by using the eight page index bits to page 4 Kbyte blocks into the RAM page window located in the CPU local memory map from address $1000 to address $1FFF (see Figure 1-12).

CAUTION

XGATE write access to this register during an CPU access which makes use of this register could lead to unexpected results.

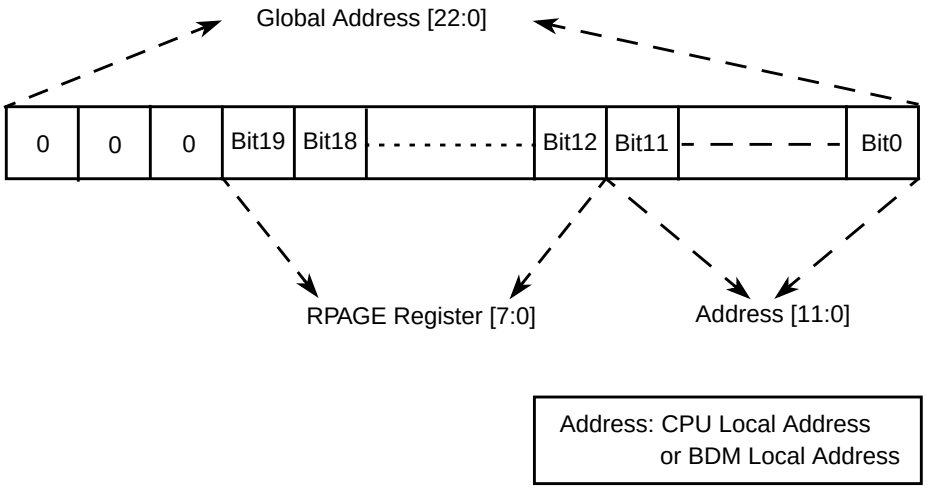

Figure 17-12. RPAGE Address Mapping

NOTE

Because RAM page 0 has the same global address as the register space, it is possible to write to registers through the RAM space when RPAGE = $00.

Table 17-11. RPAGE Field Descriptions

Field	Description
7–0 RP[7:0]	**RAM Page Index Bits 7–0** — These page index bits are used to select which of the 256 RAM array pages is to be accessed in the RAM Page Window.

The reset value of $FD ensures that there is a linear RAM space available between addresses $1000 and $3FFF out of reset.

The fixed 4K page from $2000–$2FFF of RAM is equivalent to page 254 (page number $FE).

The fixed 4K page from $3000–$3FFF of RAM is equivalent to page 255 (page number $FF).

17.3.2.7 EEPROM Page Index Register (EPAGE)

Address: 0x0017

	7	6	5	4	3	2	1	0
R W	EP7	EP6	EP5	EP4	EP3	EP2	EP1	EP0
Reset	1	1	1	1	1	1	1	0

Figure 17-13. EEPROM Page Index Register (EPAGE)

Read: Anytime

Write: Anytime

The EEPROM page index register allows accessing up to 256 Kbyte of EEPROM in the global memory map by using the eight page index bits to page 1 Kbyte blocks into the EEPROM page window located in the local CPU memory map from address $0800 to address $0BFF (see Figure 1-14).

CAUTION

XGATE write access to this register during an CPU access which makes use of this register could lead to unexpected results.

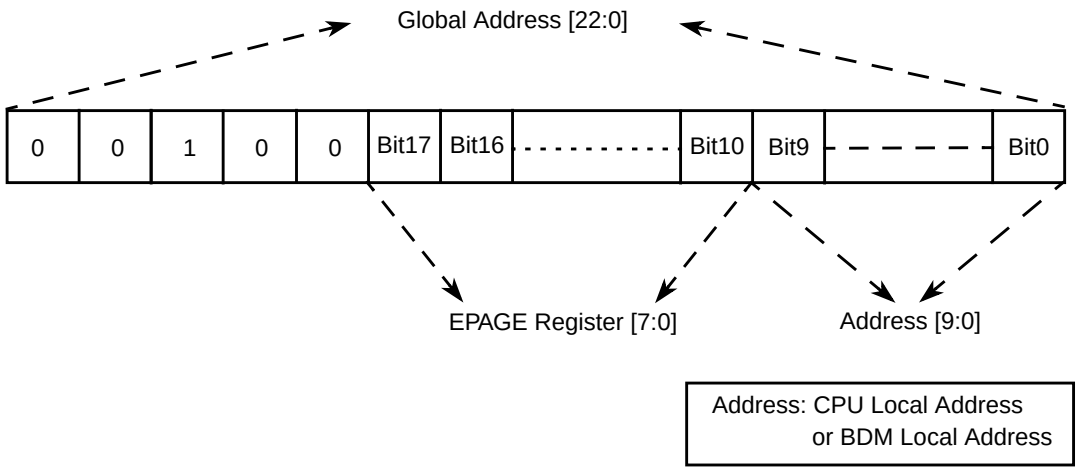

Figure 17-14. EPAGE Address Mapping

Table 17-12. EPAGE Field Descriptions

Field	Description
7–0 EP[7:0]	**EEPROM Page Index Bits 7–0** — These page index bits are used to select which of the 256 EEPROM array pages is to be accessed in the EEPROM Page Window.

The reset value of $FE ensures that there is a linear EEPROM space available between addresses $0800 and $0FFF out of reset.

The fixed 1K page $0C00–$0FFF of EEPROM is equivalent to page 255 (page number $FF).

17.3.2.8 Program Page Index Register (PPAGE)

Address: 0x0030

	7	6	5	4	3	2	1	0
R W	PIX7	PIX6	PIX5	PIX4	PIX3	PIX2	PIX1	PIX0
Reset	1	1	1	1	1	1	1	0

Figure 17-15. Program Page Index Register (PPAGE)

Read: Anytime

Write: Anytime

The program page index register allows accessing up to 4 Mbyte of FLASH or ROM in the global memory map by using the eight page index bits to page 16 Kbyte blocks into the program page window located in the CPU local memory map from address $8000 to address $BFFF (see Figure 1-16). The CPU has a special access to read and write this register during execution of CALL and RTC instructions.

CAUTION

XGATE write access to this register during an CPU access which makes use of this register could lead to unexpected results.

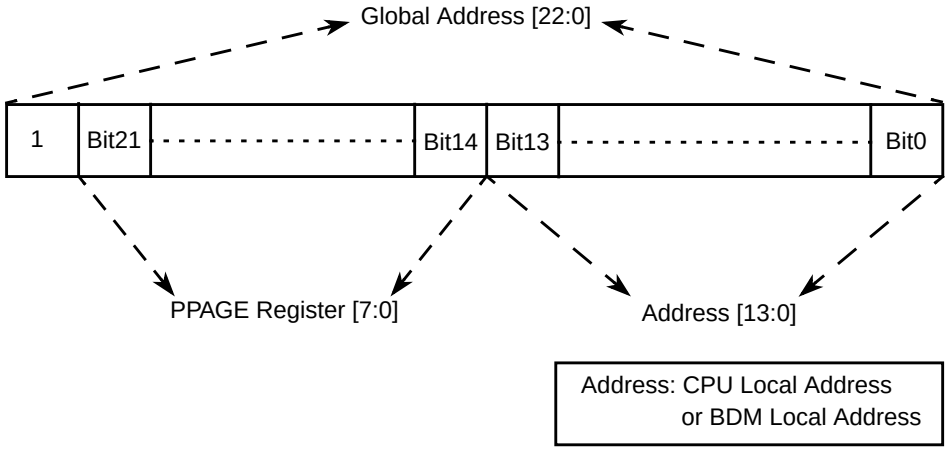

Figure 17-16. PPAGE Address Mapping

NOTE

Writes to this register using the special access of the CALL and RTC instructions will be complete before the end of the instruction execution.

Table 17-13. PPAGE Field Descriptions

Field	Description
7–0 PIX[7:0]	**Program Page Index Bits 7–0** — These page index bits are used to select which of the 256 FLASH or ROM array pages is to be accessed in the Program Page Window.

The fixed 16K page from $4000–$7FFF (when ROMHM = 0) is the page number $FD.

The reset value of $FE ensures that there is linear Flash space available between addresses $4000 and $FFFF out of reset.

The fixed 16K page from $C000-$FFFF is the page number $FF.

17.3.2.9 RAM Write Protection Control Register (RAMWPC)

Address: 0x011C

	7	6	5	4	3	2	1	0
R	RWPE	0	0	0	0	0	AVIE	AVIF
W								
Reset	0	0	0	0	0	0	0	0

= Unimplemented or Reserved

Figure 17-17. RAM Write Protection Control Register (RAMWPC)

Read: Anytime

Write: Anytime

Table 17-14. RAMWPC Field Descriptions

Field	Description
7 RWPE	**RAM Write Protection Enable** — This bit enables the RAM write protection mechanism. When the RWPE bit is cleared, there is no write protection and any memory location is writable by the CPU module and the XGATE module. When the RWPE bit is set the write protection mechanism is enabled and write access of the CPU or to the XGATE RAM region. Write access performed by the XGATE module to outside of the XGATE RAM region or the shared region is suppressed as well in this case. 0 RAM write protection check is disabled, region boundary registers can be written. 1 RAM write protection check is enabled, region boundary registers cannot be written.
1 AVIE	**CPU Access Violation Interrupt Enable** — This bit enables the Access Violation Interrupt. If AVIE is set and AVIF is set, an interrupt is generated. 0 CPU Access Violation Interrupt Disabled. 1 CPU Access Violation Interrupt Enabled.
0 AVIF	**CPU Access Violation Interrupt Flag** — When set, this bit indicates that the CPU has tried to write a memory location inside the XGATE RAM region. This flag can be reset by writing'1' to the AVIF bit location. 0 No access violation by the CPU was detected. 1 Access violation by the CPU was detected.

17.3.2.10 RAM XGATE Upper Boundary Register (RAMXGU)

Address: 0x011D

	7	6	5	4	3	2	1	0
R	1	XGU6	XGU5	XGU4	XGU3	XGU2	XGU1	XGU0
W								
Reset	1	1	1	1	1	1	1	1

= Unimplemented or Reserved

Figure 17-18. RAM XGATE Upper Boundary Register (RAMXGU)

Read: Anytime

Write: Anytime when RWPE = 0

Table 17-15. RAMXGU Field Descriptions

Field	Description
6–0 XGU[6:0]	**XGATE Region Upper Boundary Bits 6-0** — These bits define the upper boundary of the RAM region allocated to the XGATE module in multiples of 256 bytes. The 256 byte block selected by this register is included in the region. See Figure 1-25 for details.

17.3.2.11 RAM Shared Region Lower Boundary Register (RAMSHL)

Address: 0x011E

	7	6	5	4	3	2	1	0
R	1	SHL6	SHL5	SHL4	SHL3	SHL2	SHL1	SHL0
W								
Reset	1	1	1	1	1	1	1	1

= Unimplemented or Reserved

Figure 17-19. RAM Shared Region Lower Boundary Register (RAMSHL)

Read: Anytime

Write: Anytime when RWPE = 0

Table 17-16. RAMSHL Field Descriptions

Field	Description
6–0 SHL[6:0]	**RAM Shared Region Lower Boundary Bits 6–0** — These bits define the lower boundary of the shared memory region in multiples of 256 bytes. The block selected by this register is included in the region. See Figure 1-25 for details.

17.3.2.12 RAM Shared Region Upper Boundary Register (RAMSHU)

Address: 0x011F

	7	6	5	4	3	2	1	0
R	1	SHU6	SHU5	SHU4	SHU3	SHU2	SHU1	SHU0
W								
Reset	1	1	1	1	1	1	1	1

= Unimplemented or Reserved

Figure 17-20. RAM Shared Region Upper Boundary Register (RAMSHU)

Read: Anytime

Write: Anytime when RWPE = 0

Table 17-17. RAMSHU Field Descriptions

Field	Description
6–0 SHU[6:0]	**RAM Shared Region Upper Boundary Bits 6–0** — These bits define the upper boundary of the shared memory in multiples of 256 bytes. The block selected by this register is included in the region. See Figure 1-25 for details.

17.4 Functional Description

The MMC block performs several basic functions of the S12X sub-system operation: MCU operation modes, priority control, address mapping, select signal generation and access limitations for the system. Each aspect is described in the following subsections.

17.4.1 MCU Operating Mode

- Normal single-chip mode

  There is no external bus in this mode. The MCU program is executed from the internal memory and no external accesses are allowed.
- Special single-chip mode

  This mode is generally used for debugging single-chip operation, boot-strapping or security related operations. The active background debug mode is in control of the CPU code execution and the BDM firmware is waiting for serial commands sent through the BKGD pin. There is no external bus in this mode.
- Emulation single-chip mode

  Tool vendors use this mode for emulation systems in which the user's target application is normal single-chip mode. Code is executed from external or internal memory depending on the set-up of the EROMON bit (see Section 1.3.2.5, "MMC Control Register (MMCCTL1)"). The external bus is active in both cases to allow observation of internal operations (internal visibility).

- Normal expanded mode

  The external bus interface is configured as an up to 23-bit address bus, 8 or 16-bit data bus with dedicated bus control and status signals. This mode allows 8 or 16-bit external memory and peripheral devices to be interfaced to the system. The fastest external bus rate is half of the internal bus rate. An external signal can be used in this mode to cause the external bus to wait as desired by the external logic.
- Emulation expanded mode

  Tool vendors use this mode for emulation systems in which the user's target application is normal expanded mode.
- Special test mode

  This mode is an expanded mode for factory test.

17.4.2 Memory Map Scheme

17.4.2.1 CPU and BDM Memory Map Scheme

The BDM firmware lookup tables and BDM register memory locations share addresses with other modules; however they are not visible in the memory map during user's code execution. The BDM memory resources are enabled only during the READ_BD and WRITE_BD access cycles to distinguish between accesses to the BDM memory area and accesses to the other modules. (Refer to BDM Block Guide for further details).

When MCU enters active BDM mode the BDM firmware lookup tables and the BDM registers become visible in the local memory map between addresses $FF00 and $FFFF and the CPU begins execution of firmware commands or the BDM begins execution of hardware commands. The resources which share memory space with the BDM module will not be visible in the memory map during active BDM mode.

Please note that after the MCU enters active BDM mode the BDM firmware lookup tables and the BDM registers will also be visible between addresses $BF00 and $BFFF if the PPAGE register contains value of $FF.

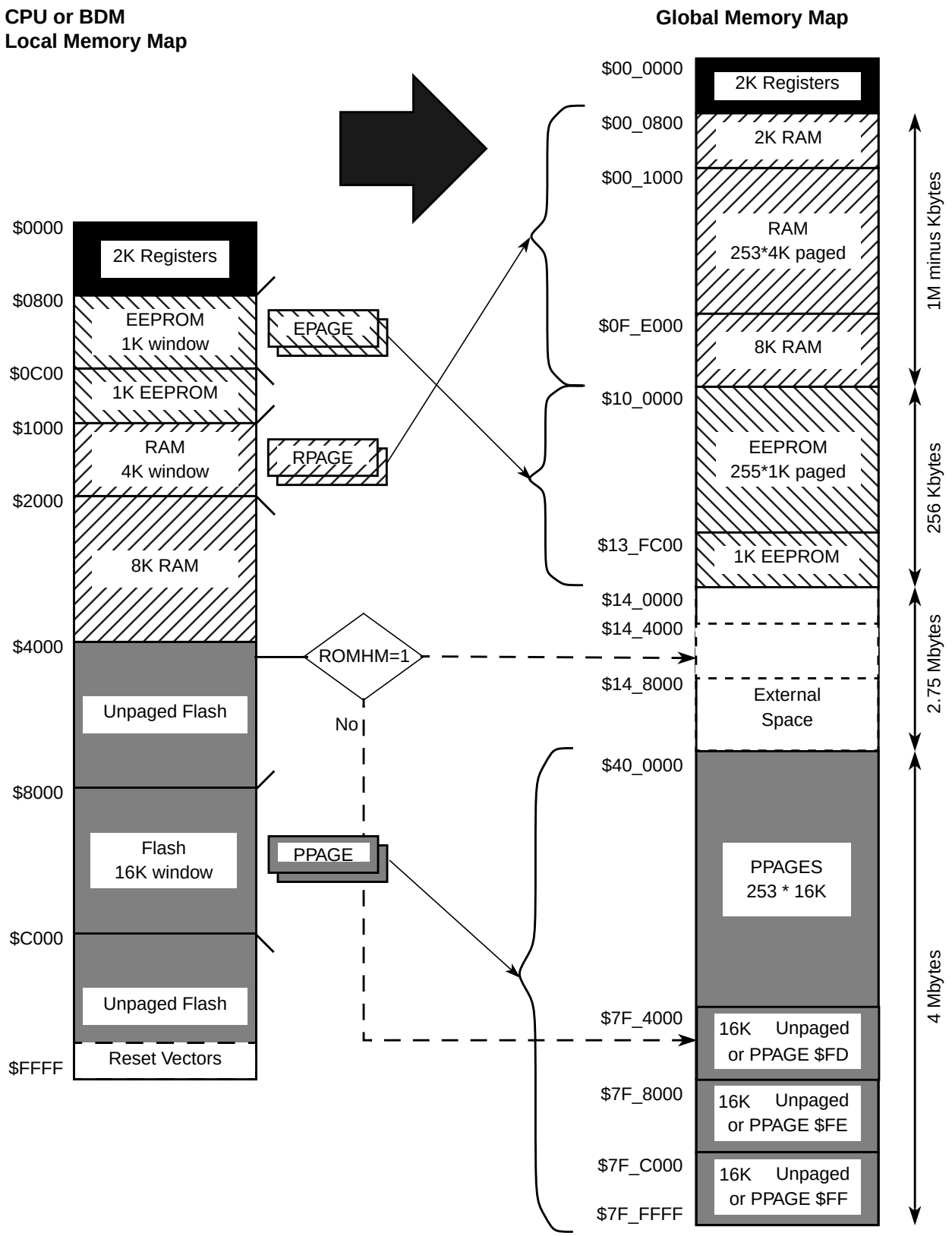

Figure 17-21. Expansion of the Local Address Map

17.4.2.1.1 Expansion of the Local Address Map

Expansion of the CPU Local Address Map

The program page index register in MMC allows accessing up to 4 Mbyte of FLASH or ROM in the global memory map by using the eight page index bits to page 256 16 Kbyte blocks into the program page window located from address $8000 to address $BFFF in the local CPU memory map.

The page value for the program page window is stored in the PPAGE register. The value of the PPAGE register can be read or written by normal memory accesses as well as by the CALL and RTC instructions (see Section 1.5.1, “CALL and RTC Instructions”).

Control registers, vector space and parts of the on-chip memories are located in unpaged portions of the 64-kilobyte local CPU address space.

The starting address of an interrupt service routine must be located in unpaged memory unless the user is certain that the PPAGE register will be set to the appropriate value when the service routine is called. However an interrupt service routine can call other routines that are in paged memory. The upper 16-kilobyte block of the local CPU memory space ($C000–$FFFF) is unpaged. It is recommended that all reset and interrupt vectors point to locations in this area or to the other upages sections of the local CPU memory map.

Table 1-19 summarizes mapping of the address bus in Flash/External space based on the address, the PPAGE register value and value of the ROMHM bit in the MMCCTL1 register.

Table 17-18. Global FLASH/ROM Allocated

Local CPU Address	ROMHM	External Access	Global Address
$4000–$7FFF	0	No	$7F_4000 –$7F_7FFF
	1	Yes	$14_4000–$14_7FFF
$8000–$BFFF	N/A	No[1]	$40_0000–$7F_FFFF
	N/A	Yes[1]	
$C000–$FFFF	N/A	No	$7F_C000–$7F_FFFF

[1] The internal or the external bus is accessed based on the size of the memory resources implemented on-chip. Please refer to Figure 1-23 for further details.

The RAM page index register allows accessing up to 1 Mbyte –2 Kbytes of RAM in the global memory map by using the eight RPAGE index bits to page 4 Kbyte blocks into the RAM page window located in the local CPU memory space from address $1000 to address $1FFF. The EEPROM page index register EPAGE allows accessing up to 256 Kbytes of EEPROM in the system by using the eight EPAGE index bits to page 1 Kbyte blocks into the EEPROM page window located in the local CPU memory space from address $0800 to address $0BFF.

Expansion of the BDM Local Address Map

PPAGE, RPAGE, and EPAGE registers are also used for the expansion of the BDM local address to the global address. These registers can be read and written by the BDM.

The BDM expansion scheme is the same as the CPU expansion scheme.

17.4.2.2 Global Addresses Based on the Global Page

CPU Global Addresses Based on the Global Page

The seven global page index bits allow access to the full 8 Mbyte address map that can be accessed with 23 address bits. This provides an alternative way to access all of the various pages of FLASH, RAM and EEPROM as well as additional external memory.

The GPAGE Register is used only when the CPU is executing a global instruction (see Section 1.3.2.3, “Global Page Index Register (GPAGE)”). The generated global address is the result of concatenation of the CPU local address [15:0] with the GPAGE register [22:16] (see Figure 1-7).

BDM Global Addresses Based on the Global Page

The seven BDMGPR Global Page index bits allow access to the full 8 Mbyte address map that can be accessed with 23 address bits. This provides an alternative way to access all of the various pages of FLASH, RAM and EEPROM as well as additional external memory.

The BDM global page index register (BDMGPR) is used only in the case the CPU is executing a firmware command which uses a global instruction (like GLDD, GSTD) or by a BDM hardware command (like WRITE_W, WRITE_BYTE, READ_W, READ_BYTE). See the BDM Block Guide for further details.

The generated global address is a result of concatenation of the BDM local address with the BDMGPR register [22:16] in the case of a hardware command or concatenation of the CPU local address and the BDMGPR register [22:16] in the case of a firmware command (see Figure 1-22).

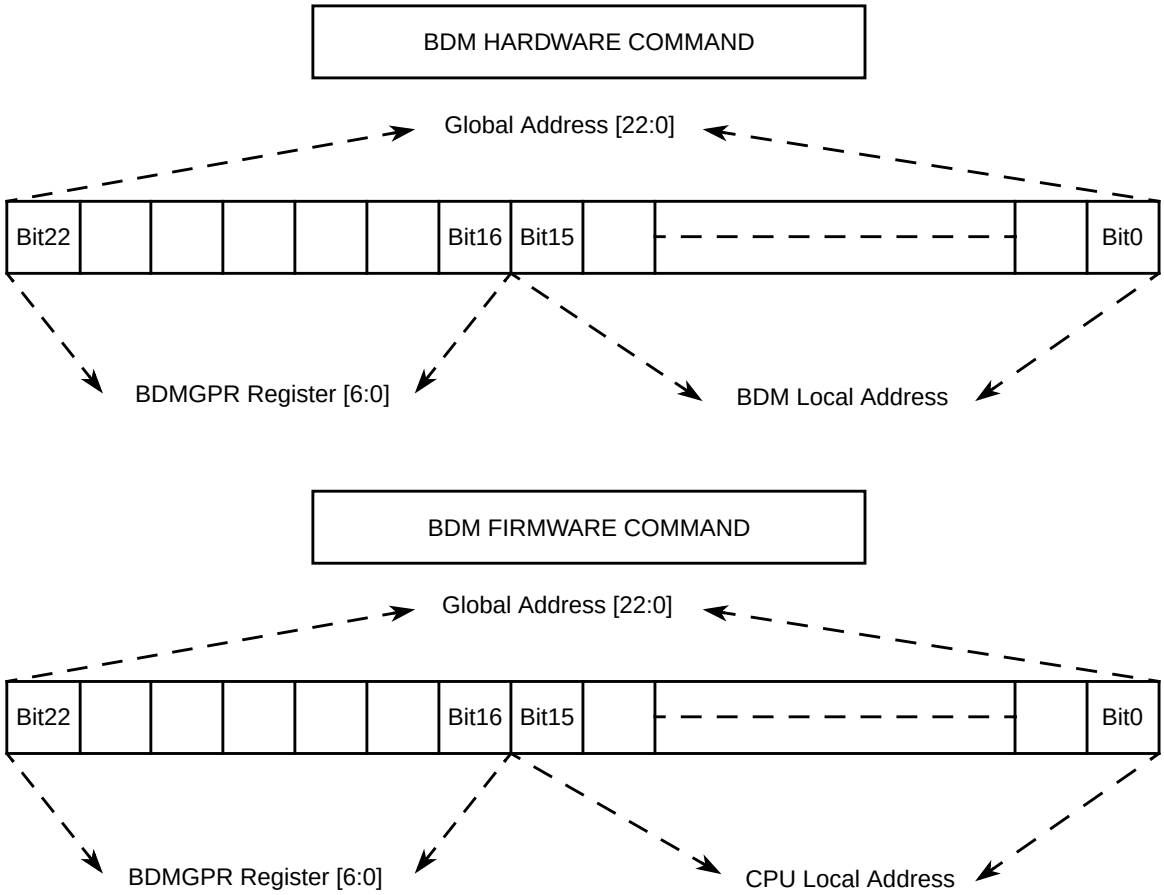

Figure 17-22. BDMGPR Address Mapping

17.4.2.3 Implemented Memory Map

The global memory spaces reserved for the internal resources (RAM, EEPROM, and FLASH) are not determined by the MMC module. Size of the individual internal resources are however fixed in the design of the device cannot be changed by the user. Please refer to the Device User Guide for further details. Figure 1-23 and Table 1-20 show the memory spaces occupied by the on-chip resources. Please note that the memory spaces have fixed top addresses.

Table 17-19. Global Implemented Memory Space

Internal Resource	Bottom Address	Top Address
Registers	$00_0000	$00_07FF
RAM	$10_0000 minus RAMSIZE[1]	$0F_FFFF
EEPROM	$14_0000 minus EEPROMSIZE[2]	$13_FFFF
FLASH	$80_0000 minus FLASHSIZE[3]	$7F_FFFF

[1] RAMSIZE is the hexadecimal value of RAM SIZE in bytes
[2] EEPROMSIZE is the hexadecimal value of EEPROM SIZE in bytes
[3] FLASHSIZE is the hexadecimal value of FLASH SIZE in bytes

When the device is operating in expanded modes except emulation single-chip mode, accesses to the global addresses which are not occupied by the on-chip resources (unimplemented areas or external space) result in accesses to the external bus (see Figure 1-23).

In emulation single-chip mode, accesses to the global addresses which are not occupied by the on-chip resources (unimplemented areas) result in accesses to the external bus. CPU accesses to the global addresses which are occupied by the external space result in an illegal access reset (system reset). The BDM accesses to the external space are performed but the data is undefined.

In single-chip modes an access to any of the unimplemented areas (see Figure 1-23) by the CPU (except firmware commands) results in an illegal access reset (system reset). The BDM accesses to the unimplemented areas are performed but the data is undefined.

Misaligned word accesses to the last location (Top address) of any of the on-chip resource blocks (except RAM) by the CPU is performed in expanded modes. In single-chip modes these accesses (except Flash) result in an illegal access reset (except firmware commands).

Misaligned word accesses to the last location (top address) of the on-chip RAM by the CPU is ignored in expanded modes (read of undefined data). In single-chip modes these accesses result in an illegal access reset (except firmware commands).

No misaligned word access from the BDM module will occur. These accesses are blocked in the BDM (Refer to BDM Block Guide).

Misaligned word accesses to the last location of any global page (64 Kbyte) by using global instructions, is performed by accessing the last byte of the page and the first byte of the same page, considering the above mentioned misaligned access cases.

The non internal resources (unimplemented areas or external space) are used to generate the chip selects (CS0,CS1,CS2 and CS3) (see Figure 1-23), which are only active in normal expanded mode, emulation expanded mode, and special test mode (see Section 1.3.2.1, “MMC Control Register (MMCCTL0)”).

Table 1-21 shows the address boundaries of each chip select and the relationship with the implemented resources (internal) parameters.

Table 17-20. Global Chip Selects Memory Space

Chip Selects	Bottom Address	Top Address
$\overline{CS3}$	$00_0800	$0F_FFFF minus RAMSIZE[1]
$\overline{CS2}$	$10_0000	$13_FFFF minus EEPROMSIZE[2]
$\overline{CS2}$[3]	$14_0000	$1F_FFFF
$\overline{CS1}$	$20_0000	$3F_FFFF
$\overline{CS0}$[4]	$40_0000	$7F_FFFF minus FLASHSIZE[5]

1 External RPAGE accesses in (NX, EX and ST)

2 External EPAGE accesses in (NX, EX and ST)

3 When ROMHM is set (see ROMHM in Table 1-19) the $\overline{CS2}$ is asserted in the space occupied by this on-chip memory block.

4 When the internal NVM is enabled (see ROMON in Section 1.3.2.5, “MMC Control Register (MMCCTL1)”) the $\overline{CS0}$ is not asserted in the space occupied by this on-chip memory block.

5 External PPAGE accesses in (NX, EX and ST)

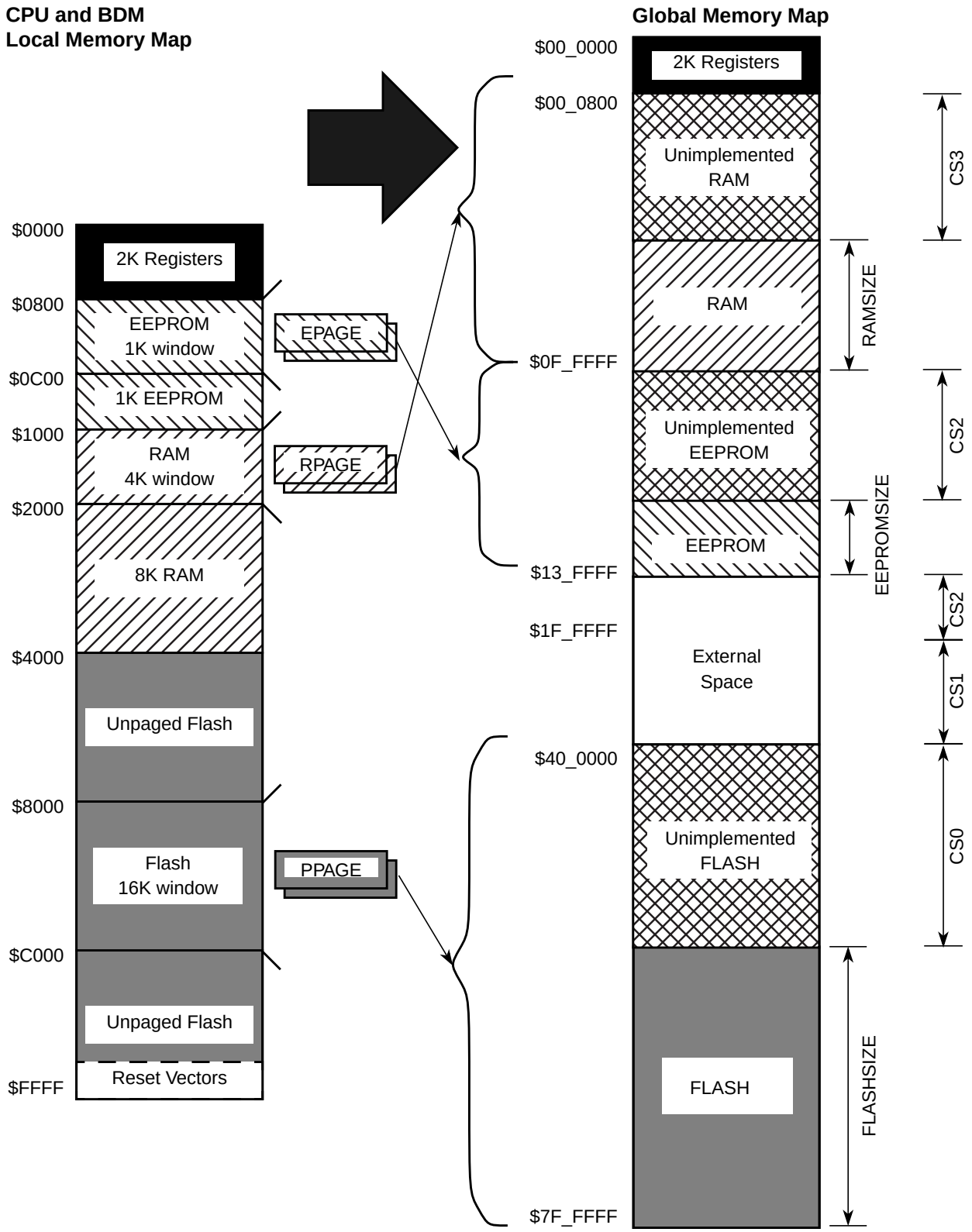

Figure 17-23. Local to Implemented Global Address Mapping (Without GPAGE)

17.4.2.4 XGATE Memory Map Scheme

17.4.2.4.1 Expansion of the XGATE Local Address Map

The XGATE 64 Kbyte memory space allows access to internal resources only (Registers, RAM, and FLASH). The 2 Kilobyte register address range is the same register address range as for the CPU and the BDM module (see Table 1-22).

XGATE can access the FLASH in single chip modes, even when the MCU is secured. In expanded modes, XGATE can not access the FLASH when MCU is secured.

The local address of the XGATE RAM access is translated to the global RAM address range. The XGATE shares the RAM resource with the CPU and the BDM module (see Table 1-22).

XGATE RAM size (XGRAMSIZE) could be lower or equal than the MCU RAM size (RAMSIZE).

The local address of the XGATE FLASH access is translated to the global address as defined by Table 1-22.

Table 17-21. XGATE Implemented Memory Space

Internal Resource	Bottom Address	Top Address
Registers	$00_0000	$00_07FF
RAM	$10_0000 minus XGRAMSIZE[1]	$0F_FFFF
FLASH	$80_0000 minus FLASHSIZE plus $800[2]	Bottom address plus $F800 minus XGRAMSIZE minus $1[3]

[1] XGRAMSIZE is the hexadecimal value of XGATE RAM SIZE in bytes.

[2] FLASHSIZE is the hexadecimal value of FLASH SIZE in bytes.

[3] $F800 is the hexadecimal value of the 64 Kilobytes minus 2 Kilobytes (Registers).

Example 17-3.

The MCU FLASHSIZE is 64 Kbytes ($10000) and MCU RAMSIZE is 32 Kbytes ($8000).

The XGATE RAMSIZE is 16 Kbytes ($4000).

The space occupied by the XGATE RAM in the global address space will be:

Bottom address: ($10_0000 minus $4000) = $0F_C000

Top address: $0F_FFFF

XGATE accesses to local address range $0800–$BFFF will result in accesses to the following FLASH block in the global address space:

Bottom address: ($80_0000 minus $01_0000 plus $800) = $7F_0800

Top address: ($7F_0800 plus ($F800 minus $4000 minus $1)) = $7F_BFFF

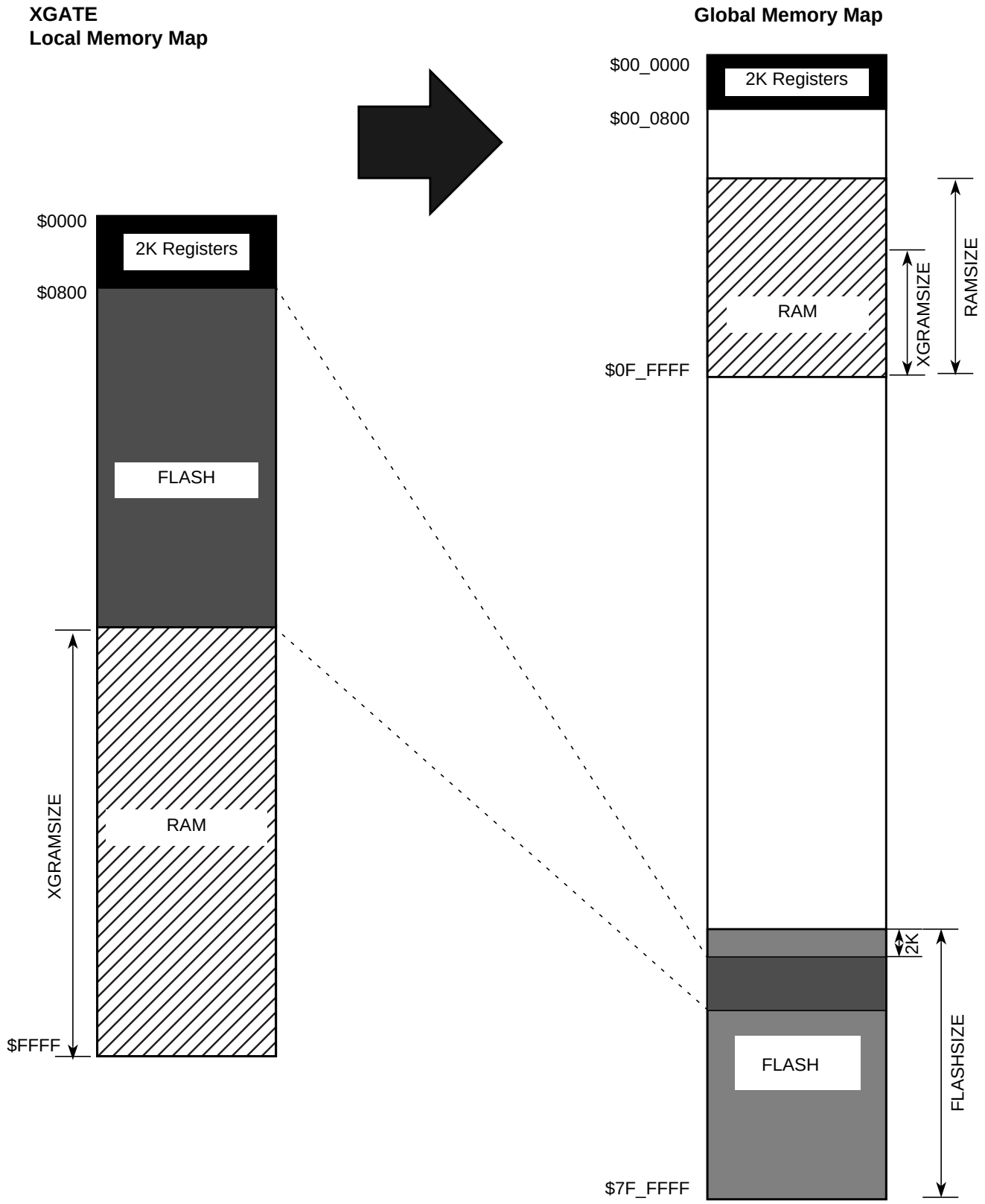

Figure 17-24. Local to Global Address Mapping (XGATE)

17.4.3 Chip Access Restrictions

17.4.3.1 Illegal XGATE Accesses

A possible access error is flagged by the MMC and signalled to XGATE under the following conditions:

- XGATE performs misaligned word (in case of load-store or opcode or vector fetch accesses).
- XGATE accesses the register space (in case of opcode or vector fetch).
- XGATE performs a write to Flash in any modes (in case of load-store access).
- XGATE performs an access to a secured Flash in expanded modes (in case of load-store or opcode or vector fetch accesses).
- XGATE performs a write to non-XGATE region in RAM (RAM protection mechanism) (in case of load-store access).

For further details refer to the XGATE Block Guide.

17.4.3.2 Illegal CPU Accesses

After programming the protection mechanism registers (see Figure 1-17, Figure 1-18, Figure 1-19, and Figure 1-20) and setting the RWPE bit (see Figure 1-17) there are 3 regions recognized by the MMC module:

1. XGATE RAM region
2. CPU RAM region
3. Shared Region (XGATE AND CPU)

If the RWPE bit is set the CPU write accesses into the XGATE RAM region are blocked. If the CPU tries to write the XGATE RAM region the AVIF bit is set and an interrupt is generated if enabled. Furthermore if the XGATE tries to write to outside of the XGATE RAM or shared regions and the RWPE bit is set, the write access is suppressed and the access error will be flagged to the XGATE module (see Section 1.4.3.1, “Illegal XGATE Accesses” and the XGATE Block Guide).

The bottom address of the XGATE RAM region always starts at the lowest implemented RAM address.

The values stored in the boundary registers define the boundary addresses in 256 byte steps. The 256 byte block selected by any of the registers is always included in the respective region. For example setting the shared region lower boundary register (RAMSHL) to $C1 and the shared region upper boundary register (RAMSHU) to $E0 defines the shared region from address $0F_C100 to address $0F_E0FF in the global memory space (see Figure 1-25).

The interrupt requests generated by the MMC are listed in Table 1-23. Refer to the Device User Guide for the related interrupt vector address and interrupt priority.

The following conditions must be satisfied to ensure correct operation of the RAM protection mechanism:

- Value stored in RAMXGU must be lower than the value stored in RAMSHL.
- Value stored RAMSHL must be lower or equal than the value stored in RAMSHU.

Table 17-22. RAM Write Protection Interrupt Vectors

Interrupt Source	CCR Mask	Local Enable
CPU access violation	I Bit	AVIE in RAMWPC

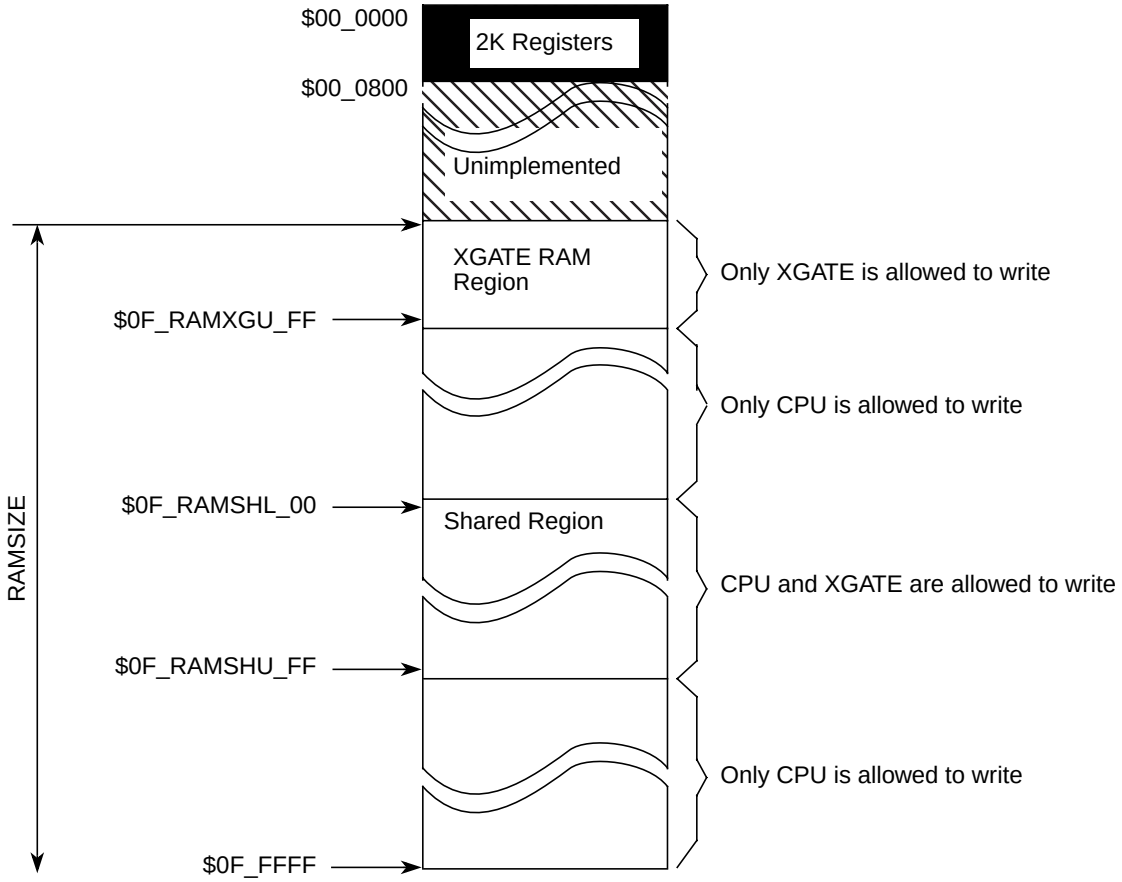

Figure 17-25. RAM Write Protection Scheme

17.4.4 Chip Bus Control

The MMC controls the address buses and the data buses that interface the S12X masters (CPU, BDM and XGATE) with the rest of the system (master buses). In addition the MMC handles all CPU read data bus swapping operations. All internal and external resources are connected to specific target buses (see Figure 1-26).

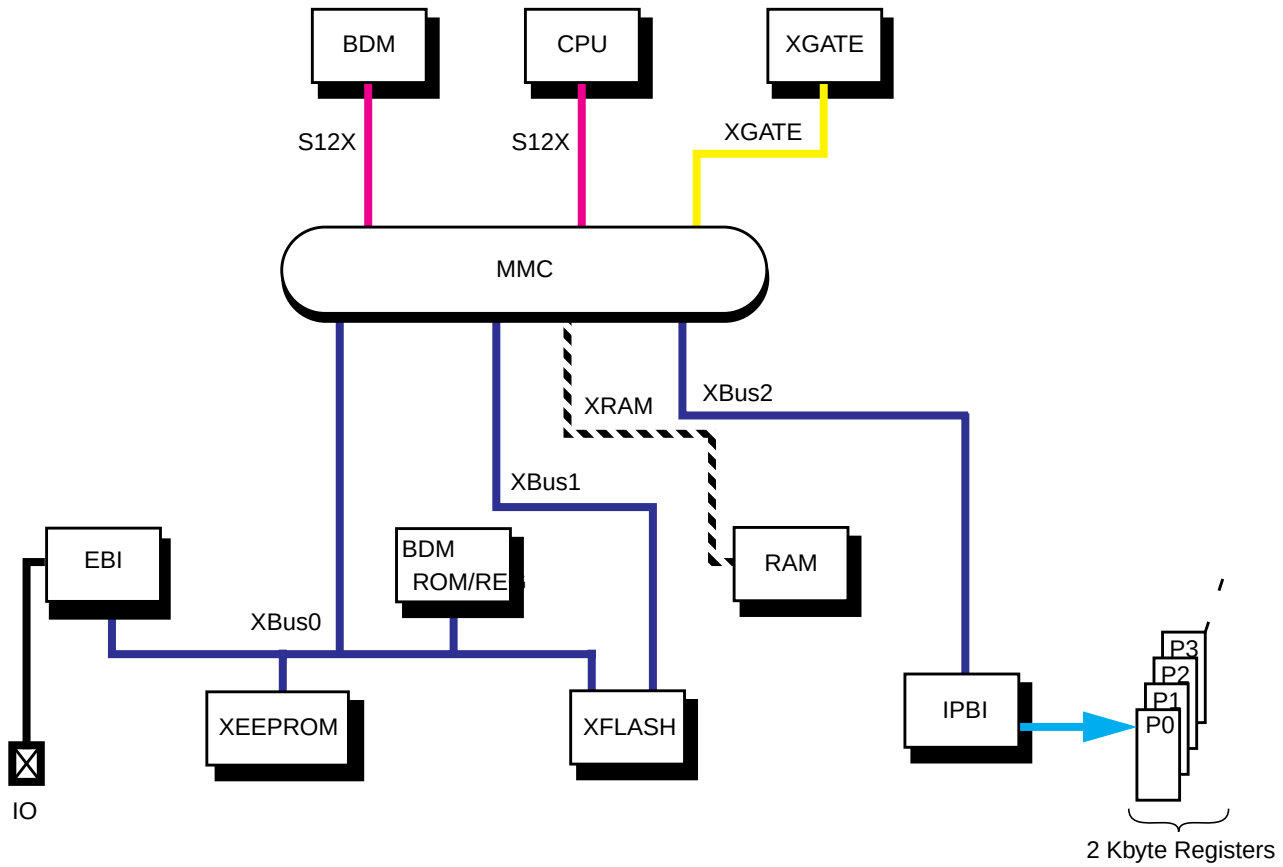

Figure 17-26. S12X Architecture

17.4.4.1 Master Bus Prioritization

The following rules apply when prioritizing accesses over master buses:

- The CPU has priority over the BDM, unless the BDM access is stalled for more than 128 cycles. In the later case the CPU will be stalled after finishing the current operation and the BDM will gain access to the bus.
- XGATE access to PRU registers constitutes a special case. It is always granted and stalls the CPU and BDM for its duration.

17.4.4.2 Access Conflicts on Target Buses

The arbitration scheme allows only one master to be connected to a target at any given time. The following rules apply when prioritizing accesses from different masters to the same target bus:

- CPU always has priority over XGATE.
- BDM access has priority over XGATE.
- XGATE access to PRU registers constitutes a special case. It is always granted and stalls the CPU and BDM for its duration.
- In emulation modes all internal accesses are visible on the external bus as well.
- During access to the PRU registers, the external bus is reserved.

17.4.5 Interrupts

17.4.5.1 Outgoing Interrupt Requests

The following interrupt requests can be triggered by the MMC module:

CPU access violation: The CPU access violation signals to the CPU detection of an error condition in the CPU application code which is resulted in write access to the protected XGATE RAM area (see Section 1.4.3.2, “Illegal CPU Accesses”).

17.5 Initialization/Application Information

17.5.1 CALL and RTC Instructions

CALL and RTC instructions are uninterruptable CPU instructions that automate page switching in the program page window. The CALL instruction is similar to the JSR instruction, but the subroutine that is called can be located anywhere in the local address space or in any Flash or ROM page visible through the program page window. The CALL instruction calculates and stacks a return address, stacks the current PPAGE value and writes a new instruction-supplied value to the PPAGE register. The PPAGE value controls which of the 256 possible pages is visible through the 16 Kbyte program page window in the 64 Kbyte local CPU memory map. Execution then begins at the address of the called subroutine.

During the execution of the CALL instruction, the CPU performs the following steps:

1. Writes the current PPAGE value into an internal temporary register and writes the new instruction-supplied PPAGE value into the PPAGE register
2. Calculates the address of the next instruction after the CALL instruction (the return address) and pushes this 16-bit value onto the stack
3. Pushes the temporarily stored PPAGE value onto the stack
4. Calculates the effective address of the subroutine, refills the queue and begins execution at the new address

This sequence is uninterruptable. There is no need to inhibit interrupts during the CALL instruction execution. A CALL instruction can be performed from any address to any other address in the local CPU memory space.

The PPAGE value supplied by the instruction is part of the effective address of the CPU. For all addressing mode variations (except indexed-indirect modes) the new page value is provided by an immediate operand in the instruction. In indexed-indirect variations of the CALL instruction a pointer specifies memory locations where the new page value and the address of the called subroutine are stored. Using indirect addressing for both the new page value and the address within the page allows usage of values calculated at run time rather than immediate values that must be known at the time of assembly.

The RTC instruction terminates subroutines invoked by a CALL instruction. The RTC instruction unstacks the PPAGE value and the return address and refills the queue. Execution resumes with the next instruction after the CALL instruction.

During the execution of an RTC instruction the CPU performs the following steps:

1. Pulls the previously stored PPAGE value from the stack
2. Pulls the 16-bit return address from the stack and loads it into the PC
3. Writes the PPAGE value into the PPAGE register
4. Refills the queue and resumes execution at the return address

This sequence is uninterruptable. The RTC can be executed from anywhere in the local CPU memory space.

The CALL and RTC instructions behave like JSR and RTS instruction, they however require more execution cycles. Usage of JSR/RTS instructions is therefore recommended when possible and CALL/RTC instructions should only be used when needed. The JSR and RTS instructions can be used to access subroutines that are already present in the local CPU memory map (i.e. in the same page in the program memory page window for example). However calling a function located in a different page requires usage of the CALL instruction. The function must be terminated by the RTC instruction. Because the RTC instruction restores contents of the PPAGE register from the stack, functions terminated with the RTC instruction must be called using the CALL instruction even when the correct page is already present in the memory map. This is to make sure that the correct PPAGE value will be present on stack at the time of the RTC instruction execution.

17.5.2 Port Replacement Registers (PRRs)

Registers used for emulation purposes must be rebuilt by the in-circuit emulator hardware to achieve full emulation of single chip mode operation. These registers are called port replacement registers (PRRs) (see Table 1-25). PRRs are accessible from all masters using different access types (word aligned, word-misaligned and byte). Each access to PRRs will be extended to 2 bus cycles for write or read accesses independent of the operating mode. In emulation modes all write operations result in writing into the internal registers (peripheral access) and into the emulated registers (external access) located in the PRU in the emulator at the same time. All read operations are performed from external registers (external access) in emulation modes. In all other modes the read operations are performed from the internal registers (peripheral access).

Due to internal visibility of CPU accesses the CPU will be halted during XGATE or BDM access to any PRR. This rule applies also in normal modes to ensure that operation of the device is the same as in emulation modes.

A summary of PRR accesses is the following:

- An aligned word access to a PRR will take 2 bus cycles.
- A misaligned word access to a PRRs will take 4 cycles. If one of the two bytes accessed by the misaligned word access is not a PRR, the access will take only 3 cycles.
- A byte access to a PRR will take 2 cycles.

Table 17-23. PRR Listing

PRR Name	PRR Local Address	PRR Location
PORTA	$0000	PIM
PORTB	$0001	PIM
DDRA	$0002	PIM
DDRB	$0003	PIM
PORTC	$0004	PIM
PORTD	$0005	PIM
DDRC	$0006	PIM
DDRD	$0007	PIM
PORTE	$0008	PIM
DDRE	$0009	PIM
MMCCTL0	$000A	MMC
MODE	$000B	MMC
PUCR	$000C	PIM
RDRIV	$000D	PIM
EBICTL0	$000E	EBI
EBICTL1	$000F	EBI
Reserved	$0012	MMC
MMCCTL1	$0013	MMC
ECLKCTL	$001C	PIM
Reserved	$001D	PIM
PORTK	$0032	PIM
DDRK	$0033	PIM

17.5.3 On-Chip ROM Control

The MCU offers two modes to support emulation. In the first mode (called generator) the emulator provides the data instead of the internal FLASH and traces the CPU actions. In the other mode (called observer) the internal FLASH provides the data and all internal actions are made visible to the emulator.

17.5.3.1 ROM Control in Single-Chip Modes

In single-chip modes the MCU has no external bus. All memory accesses and program fetches are internal (see Figure 1-27).

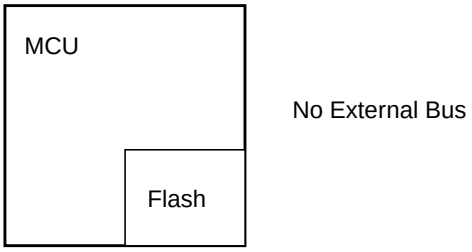

Figure 17-27. ROM in Single Chip Modes

17.5.3.2 ROM Control in Emulation Single-Chip Mode

In emulation single-chip mode the external bus is connected to the emulator. If the EROMON bit is set, the internal FLASH provides the data and the emulator can observe all internal CPU actions on the external bus. If the EROMON bit is cleared, the emulator provides the data (generator) and traces the all CPU actions (see Figure 1-28).

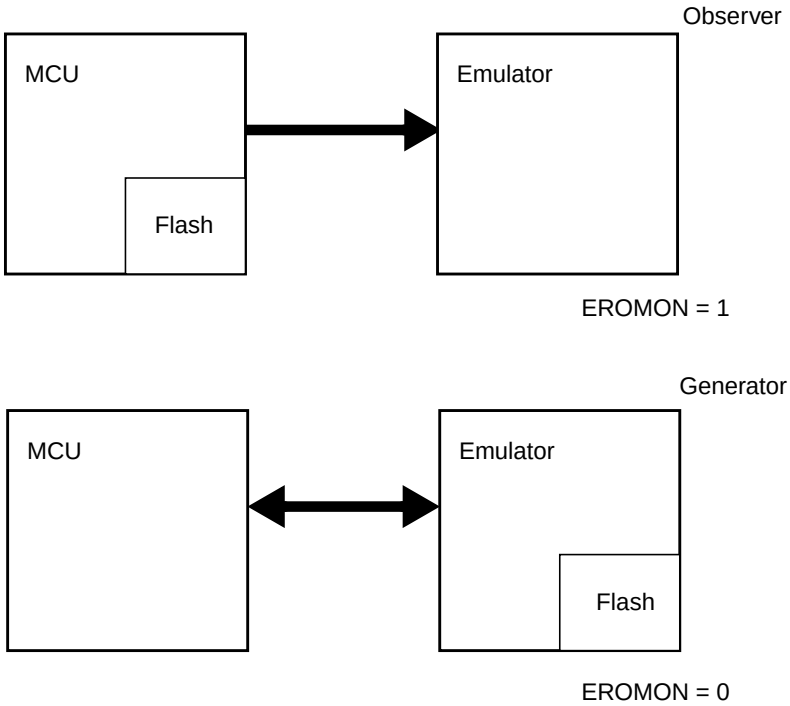

Figure 17-28. ROM in Emulation Single-Chip Mode

17.5.3.3 ROM Control in Normal Expanded Mode

In normal expanded mode the external bus will be connected to the application. If the ROMON bit is set, the internal FLASH provides the data. If the ROMON bit is cleared, the application memory provides the data (see Figure 1-29).

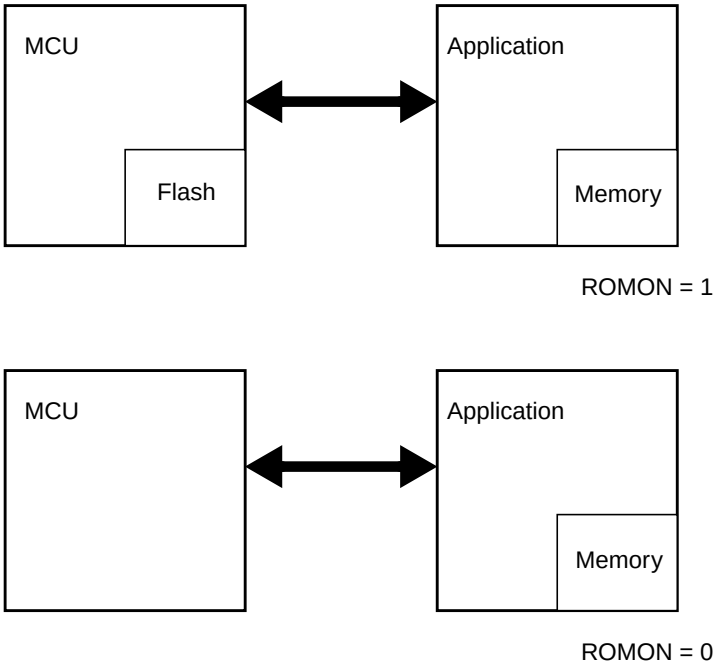

Figure 17-29. ROM in Normal Expanded Mode

17.5.3.4 ROM Control in Emulation Expanded Mode

In emulation expanded mode the external bus will be connected to the emulator and to the application. If the ROMON bit is set, the internal FLASH provides the data. If the EROMON bit is set as well the emulator observes all CPU internal actions, otherwise the emulator provides the data and traces all CPU actions (see Figure 1-30). When the ROMON bit is cleared, the application memory provides the data and the emulator will observe the CPU internal actions (see Figure 1-31).

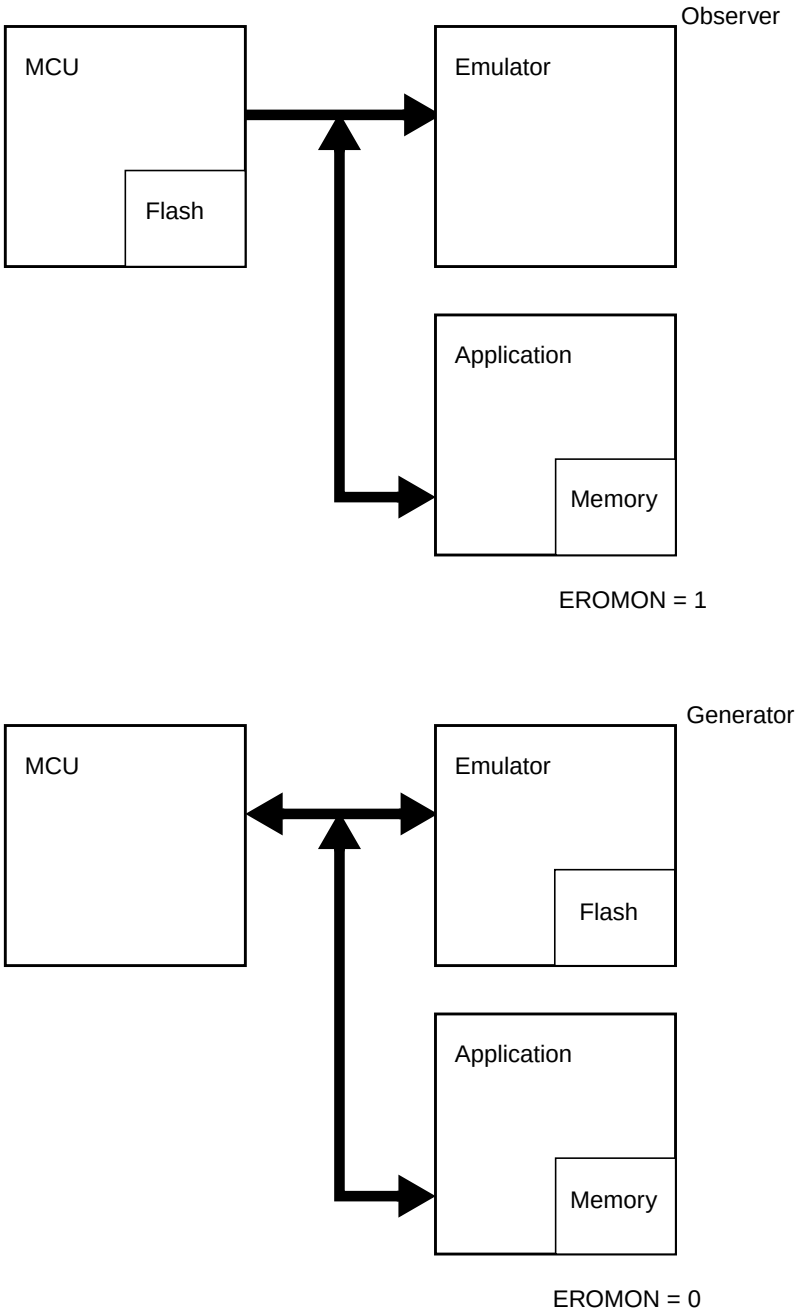

Figure 17-30. ROMON = 1 in Emulation Expanded Mode

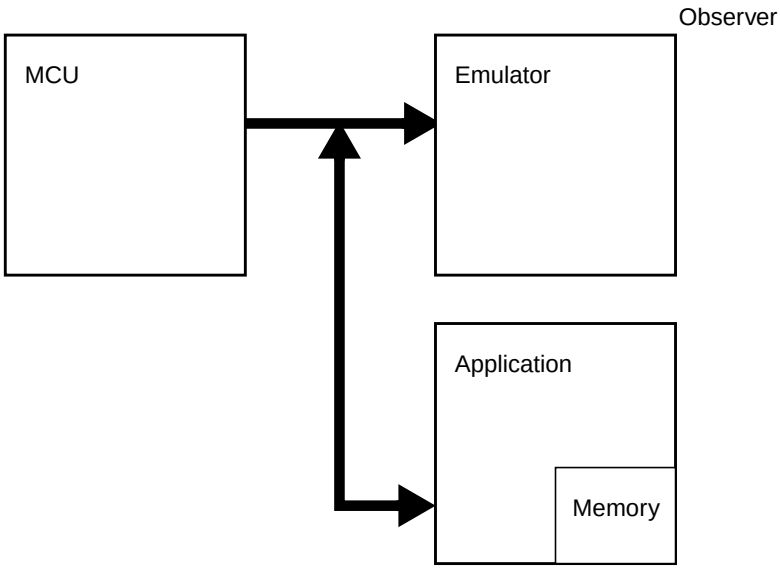

Figure 17-31. ROMON = 0 in Emulation Expanded Mode

17.5.3.5 ROM Control in Special Test Mode

In special test mode the external bus is connected to the application. If the ROMON bit is set, the internal FLASH provides the data, otherwise the application memory provides the data (see Figure 1-32).

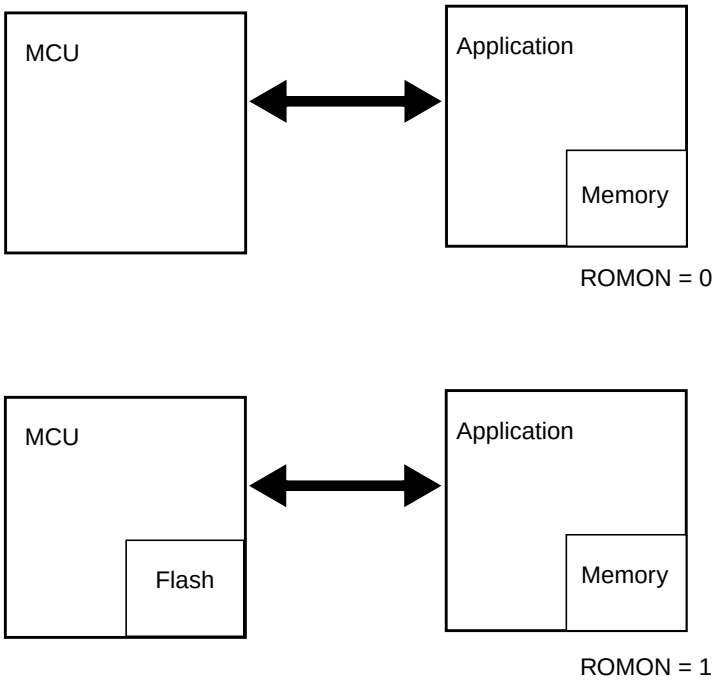

Figure 17-32. ROM in Special Test Mode

Chapter 18
Memory Mapping Control (S12XMMCV3)

18.1 Introduction

This section describes the functionality of the module mapping control (MMC) sub-block of the S12X platform. The block diagram of the MMC is shown in Figure 18-1.

The MMC module controls the multi-master priority accesses, the selection of internal resources and external space. Internal buses, including internal memories and peripherals, are controlled in this module. The local address space for each master is translated to a global memory space.

18.1.1 Terminology

Table 18-1. Acronyms and Abbreviations

Logic level “1”	Voltage that corresponds to Boolean true state
Logic level “0”	Voltage that corresponds to Boolean false state
0x	Represents hexadecimal number
x	Represents logic level ’don’t care’
byte	8-bit data
word	16-bit data
local address	based on the 64 KBytes Memory Space (16-bit address)
global address	based on the 8 MBytes Memory Space (23-bit address)
Aligned address	Address on even boundary
Mis-aligned address	Address on odd boundary
Bus Clock	System Clock. Refer to CRG Block Guide.
expanded modes	Normal Expanded Mode Emulation Single-Chip Mode Emulation Expanded Mode Special Test Mode
single-chip modes	Normal Single-Chip Mode Special Single-Chip Mode
emulation modes	Emulation Single-Chip Mode Emulation Expanded Mode
normal modes	Normal Single-Chip Mode Normal Expanded Mode
special modes	Special Single-Chip Mode Special Test Mode
NS	Normal Single-Chip Mode
SS	Special Single-Chip Mode
NX	Normal Expanded Mode
ES	Emulation Single-Chip Mode
EX	Emulation Expanded Mode
ST	Special Test Mode
Unimplemented areas	Areas which are accessible by the pages (RPAGE,PPAGE,EPAGE) and not implemented
External Space	Area which is accessible in the global address range 14_0000 to 3F_FFFF
external resource	Resources (Emulator, Application) connected to the MCU via the external bus on expanded modes (Unimplemented areas and External Space)
PRR	Port Replacement Registers
PRU	Port Replacement Unit located on the emulator side
MCU	MicroController Unit
NVM	Non-volatile Memory; Flash EEPROM or ROM

18.1.2 Features

The main features of this block are:

- Paging capability to support a global 8 Mbytes memory address space
- Bus arbitration between the masters CPU, BDM and XGATE

- Simultaneous accesses to different resources[1] (internal, external, and peripherals) (see)
- Resolution of target bus access collision
- Access restriction control from masters to some targets (e.g., RAM write access protection for user specified areas)
- MCU operation mode control
- MCU security control
- Separate memory map schemes for each master CPU, BDM and XGATE
- ROM control bits to enable the on-chip FLASH or ROM selection
- Port replacement registers access control
- Generation of system reset when CPU accesses an unimplemented address (i.e., an address which does not belong to any of the on-chip modules) in single-chip modes

18.1.3 S12X Memory Mapping

The S12X architecture implements a number of memory mapping schemes including

- a CPU 8 MByte global map, defined using a global page (GPAGE) register and dedicated 23-bit address load/store instructions.
- a BDM 8 MByte global map, defined using a global page (BDMGPR) register and dedicated 23-bit address load/store instructions.
- a (CPU or BDM) 64 KByte local map, defined using specific resource page (RPAGE, EPAGE and PPAGE) registers and the default instruction set. The 64 KBytes visible at any instant can be considered as the local map accessed by the 16-bit (CPU or BDM) address.
- The XGATE 64 Kbyte local map.

The MMC module performs translation of the different memory mapping schemes to the specific global (physical) memory implementation.

18.1.4 Modes of Operation

This subsection lists and briefly describes all operating modes supported by the MMC.

18.1.4.1 Power Saving Modes

- Run mode
  MMC is functional during normal run mode.
- Wait mode
  MMC is functional during wait mode.
- Stop mode
  MMC is inactive during stop mode.

1. Resources are also called targets.

18.1.4.2 Functional Modes

- Single chip modes

  In normal and special single chip mode the internal memory is used. External bus is not active.
- Expanded modes

  Address, data, and control signals are activated in normal expanded and special test modes when accessing the external bus. Access to internal resources will not cause activity on the external bus.
- Emulation modes

  External bus is active to emulate, via an external tool, the normal expanded or the normal single chip mode.

18.1.5 Block Diagram

Figure 18-1[1] shows a block diagram of the MMC.

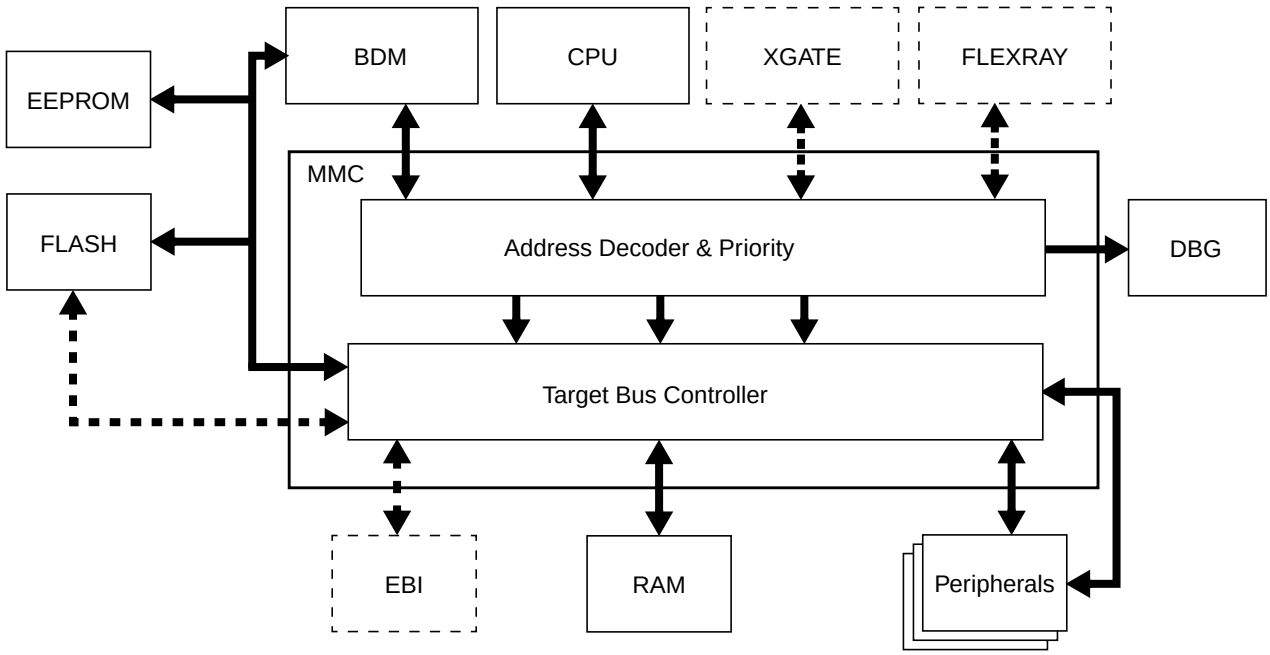

Figure 18-1. MMC Block Diagram

18.2 External Signal Description

The user is advised to refer to the SoC Guide for port configuration and location of external bus signals. Some pins may not be bonded out in all implementations.

Table 18-2 and Table 18-3 outline the pin names and functions. It also provides a brief description of their operation.

1. Doted blocks and lines are optional. Please refer to the Device User Guide for their availlibilities.

Table 18-2. External Input Signals Associated with the MMC

Signal	I/O	Description	Availability
MODC	I	Mode input	Latched after $\overline{\text{RESET}}$ (active low)
MODB	I	Mode input	Latched after $\overline{\text{RESET}}$ (active low)
MODA	I	Mode input	Latched after $\overline{\text{RESET}}$ (active low)
EROMCTL	I	EROM control input	Latched after $\overline{\text{RESET}}$ (active low)
ROMCTL	I	ROM control input	Latched after $\overline{\text{RESET}}$ (active low)

Table 18-3. External Output Signals Associated with the MMC

Signal	I/O	Description	Available in Modes					
			NS	SS	NX	ES	EX	ST
CS0	O	Chip select line 0	(see Table 18-4)					
CS1	O	Chip select line 1						
CS2	O	Chip select line 2						
CS3	O	Chip select line 3						

18.3 Memory Map and Registers

18.3.1 Module Memory Map

A summary of the registers associated with the MMC block is shown in Figure 18-2. Detailed descriptions of the registers and bits are given in the subsections that follow.

Address	Register Name		Bit 7	6	5	4	3	2	1	Bit 0
0x000A	MMCCTL0	R	0	0	0	0	CS3E	CS2E	CS1E	CS0E
		W								
0x000B	MODE	R	MODC	MODB	MODA	0	0	0	0	0
		W								
0x0010	GPAGE	R	0	GP6	GP5	GP4	GP3	GP2	GP1	GP0
		W								
0x0011	DIRECT	R	DP15	DP14	DP13	DP12	DP11	DP10	DP9	DP8
		W								
0x0012	Reserved	R	0	0	0	0	0	0	0	0
		W								
0x0013	MMCCTL1	R	0	0	0	0	0	EROMON	ROMHM	ROMON
		W								
0x0014	Reserved	R	0	0	0	0	0	0	0	0
		W								
0x0015	Reserved	R	0	0	0	0	0	0	0	0
		W								
0x0016	RPAGE	R	RP7	RP6	RP5	RP4	RP3	RP2	RP1	RP0
		W								
0x0017	EPAGE	R	EP7	EP6	EP5	EP4	EP3	EP2	EP1	EP0
		W								
0x0030	PPAGE	R	PIX7	PIX6	PIX5	PIX4	PIX3	PIX2	PIX1	PIX0
		W								
0x0031	Reserved	R	0	0	0	0	0	0	0	0
		W								

= Unimplemented or Reserved

Figure 18-2. MMC Register Summary

Address	Register Name		Bit 7	6	5	4	3	2	1	Bit 0
0x011D	RAMXGU	R	1	XGU6	XGU5	XGU4	XGU3	XGU2	XGU1	XGU0
		W								
0x011E	RAMSHL	R	1	SHL6	SHL5	SHL4	SHL3	SHL2	SHL1	SHL0
		W								
0x011F	RAMSHU	R	1	SHU6	SHU5	SHU4	SHU3	SHU2	SHU1	SHU0
		W								

= Unimplemented or Reserved

Figure 18-2. MMC Register Summary

18.3.2 Register Descriptions

18.3.2.1 MMC Control Register (MMCCTL0)

Address: 0x000A PRR

	7	6	5	4	3	2	1	0
R	0	0	0	0	CS3E	CS2E	CS1E	CS0E
W								
Reset	0	0	0	0	0	0	0	$\overline{\text{ROMON}}$[1]

1. ROMON is bit[0] of the register MMCTL1 (see Figure 18-10)

= Unimplemented or Reserved

Figure 18-3. MMC Control Register (MMCCTL0)

Read: Anytime. In emulation modes read operations will return the data from the external bus. In all other modes the data is read from this register.

Write: Anytime. In emulation modes write operations will also be directed to the external bus.

Table 18-4. Chip Selects Function Activity

Register Bit	Chip Modes					
	NS	SS	NX	ES	EX	ST
CS3E, CS2E, CS1E, CS0E	Disabled[1]	Disabled	Enabled[2]	Disabled	Enabled	Enabled

[1] Disabled: feature always inactive.

[2] Enabled: activity is controlled by the appropriate register bit value.

The MMCCTL0 register is used to control external bus functions, i.e., availability of chip selects.

CAUTION

XGATE write access to this register during an CPU access which makes use of this register could lead to unexpected results.

Table 18-5. MMCCTL0 Field Descriptions

Field	Description
3–0 CS[3:0]E	**Chip Select Enables** — Each of these bits enables one of the external chip selects $\overline{CS3}$, $\overline{CS2}$, $\overline{CS1}$, and $\overline{CS0}$ outputs which are asserted during accesses to specific external addresses. The associated global address ranges are shown in Table 18-6 and Table 18-21 and Figure 18-21. Chip selects are only active if enabled in normal expanded mode, Emulation expanded mode and special test mode. The function disabled in all other operating modes. 0 Chip select is disabled 1 Chip select is enabled

Table 18-6. Chip Select Signals

Global Address Range	Asserted Signal
0x00_0800–0x0F_FFFF	$\overline{CS3}$
0x10_0000–0x1F_FFFF	$\overline{CS2}$
0x20_0000–0x3F_FFFF	$\overline{CS1}$
0x40_0000–0x7F_FFFF	$\overline{CS0}$[1]

[1] When the internal NVM is enabled (see ROMON in Section 18.3.2.5, “MMC Control Register (MMCCTL1)) the $\overline{CS0}$ is not asserted in the space occupied by this on-chip memory block.

18.3.2.2 Mode Register (MODE)

Address: 0x000B PRR

	7	6	5	4	3	2	1	0
R	MODC	MODB	MODA	0	0	0	0	0
W								
Reset	MODC[1]	MODB[1]	MODA[1]	0	0	0	0	0

1. External signal (see Table 18-2).

= Unimplemented or Reserved

Figure 18-4. Mode Register (MODE)

Read: Anytime. In emulation modes read operations will return the data read from the external bus. In all other modes the data are read from this register.

Write: Only if a transition is allowed (see Figure 18-5). In emulation modes write operations will be also directed to the external bus.

The MODE bits of the MODE register are used to establish the MCU operating mode.

CAUTION

XGATE write access to this register during an CPU access which makes use of this register could lead to unexpected results.

Table 18-7. MODE Field Descriptions

Field	Description
7–5 MODC, MODB, MODA	**Mode Select Bits** — These bits control the current operating mode during $\overline{\text{RESET}}$ high (inactive). The external mode pins MODC, MODB, and MODA determine the operating mode during $\overline{\text{RESET}}$ low (active). The state of the pins is latched into the respective register bits after the $\overline{\text{RESET}}$ signal goes inactive (see Figure 18-5). Write restrictions exist to disallow transitions between certain modes. Figure 18-5 illustrates all allowed mode changes. Attempting non authorized transitions will not change the MODE bits, but it will block further writes to these register bits except in special modes. Both transitions from normal single-chip mode to normal expanded mode and from emulation single-chip to emulation expanded mode are only executed by writing a value of 3'b101 (write once). Writing any other value will not change the MODE bits, but will block further writes to these register bits. Changes of operating modes are not allowed when the device is secured, but it will block further writes to these register bits except in special modes. In emulation modes reading this address returns data from the external bus which has to be driven by the emulator. It is therefore responsibility of the emulator hardware to provide the expected value (i.e. a value corresponding to normal single chip mode while the device is in emulation single-chip mode or a value corresponding to normal expanded mode while the device is in emulation expanded mode).

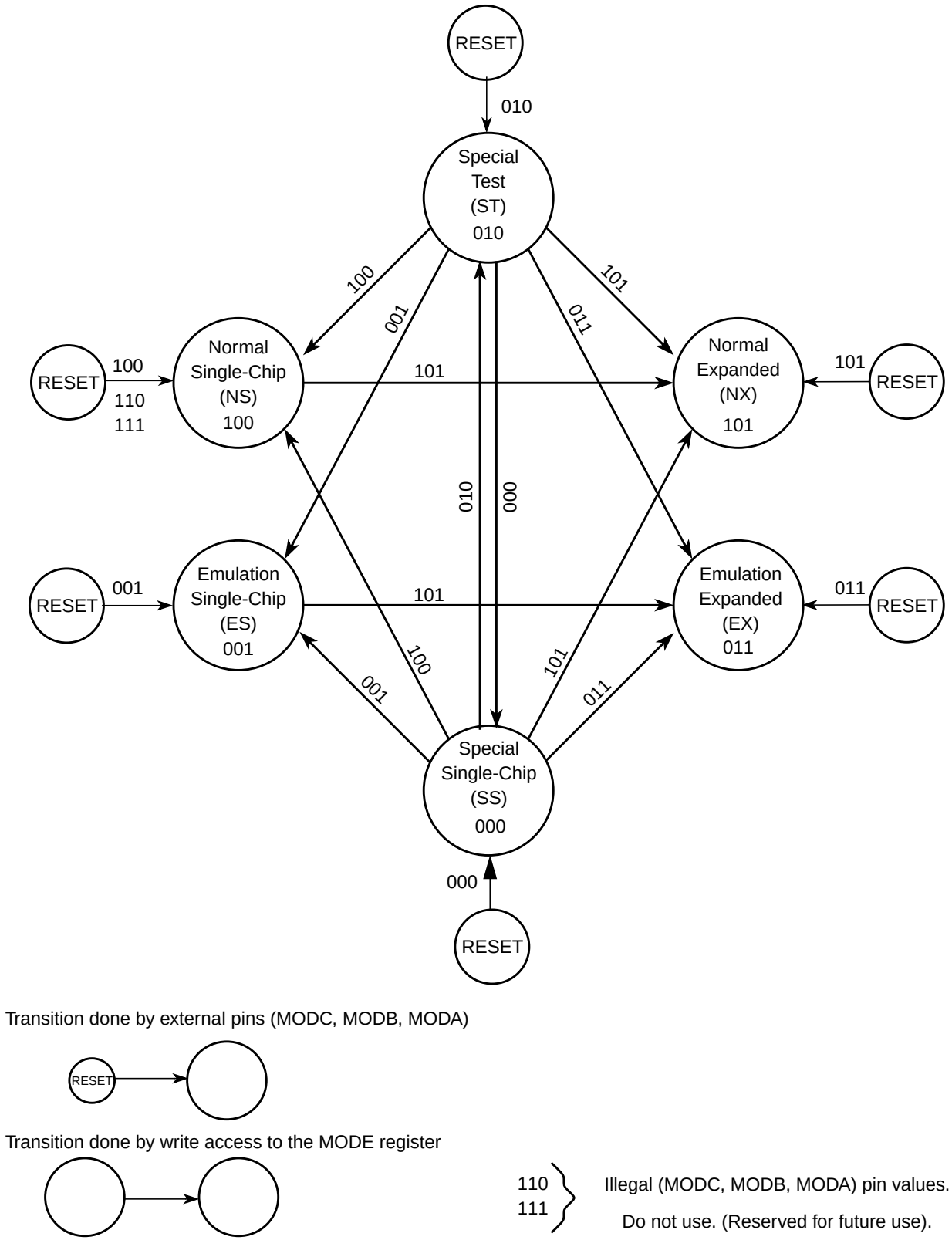

Figure 18-5. Mode Transition Diagram when MCU is Unsecured

18.3.2.3 Global Page Index Register (GPAGE)

Address: 0x0010

	7	6	5	4	3	2	1	0
R	0	GP6	GP5	GP4	GP3	GP2	GP1	GP0
W								
Reset	0	0	0	0	0	0	0	0

= Unimplemented or Reserved

Figure 18-6. Global Page Index Register (GPAGE)

Read: Anytime

Write: Anytime

The global page index register is used to construct a 23 bit address in the global map format. It is only used when the CPU is executing a global instruction (GLDAA, GLDAB, GLDD, GLDS, GLDX, GLDY,GSTAA, GSTAB, GSTD, GSTS, GSTX, GSTY) (see CPU Block Guide). The generated global address is the result of concatenation of the CPU local address [15:0] with the GPAGE register [22:16] (see Figure 18-7).

CAUTION

XGATE write access to this register during an CPU access which makes use of this register could lead to unexpected results.

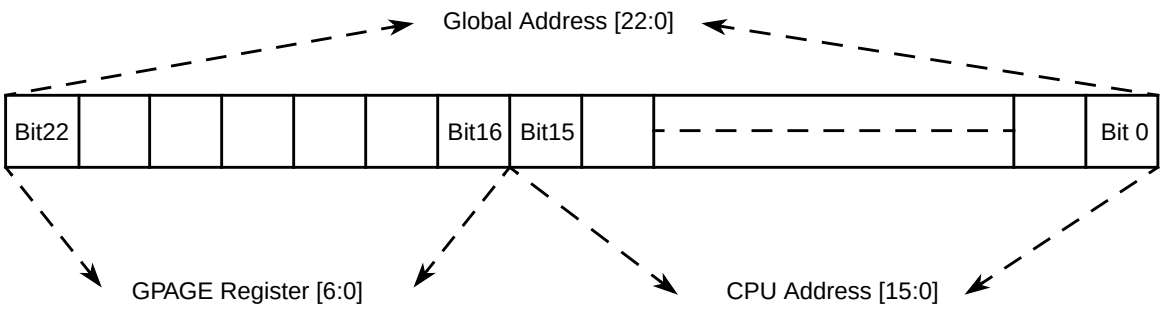

Figure 18-7. GPAGE Address Mapping

Table 18-8. GPAGE Field Descriptions

Field	Description
6–0 GP[6:0]	**Global Page Index Bits 6–0** — These page index bits are used to select which of the 128 64-kilobyte pages is to be accessed.

Example 18-1. This example demonstrates usage of the GPAGE register

```
LDX     #0x5000          ;Set GPAGE offset to the value of 0x5000
MOVB    #0x14, GPAGE     ;Initialize GPAGE register with the value of 0x14
GLDAA   X                ;Load Accu A from the global address 0x14_5000
```

18.3.2.4 Direct Page Register (DIRECT)

Address: 0x0011

	7	6	5	4	3	2	1	0
R W	DP15	DP14	DP13	DP12	DP11	DP10	DP9	DP8
Reset	0	0	0	0	0	0	0	0

Figure 18-8. Direct Register (DIRECT)

Read: Anytime

Write: anytime in special modes, one time only in other modes.

This register determines the position of the 256 Byte direct page within the memory map.It is valid for both global and local mapping scheme.

Table 18-9. DIRECT Field Descriptions

Field	Description
7–0 DP[15:8]	**Direct Page Index Bits 15–8** — These bits are used by the CPU when performing accesses using the direct addressing mode. The bits from this register form bits [15:8] of the address (see Figure 18-9).

CAUTION

XGATE write access to this register during an CPU access which makes use of this register could lead to unexpected results.

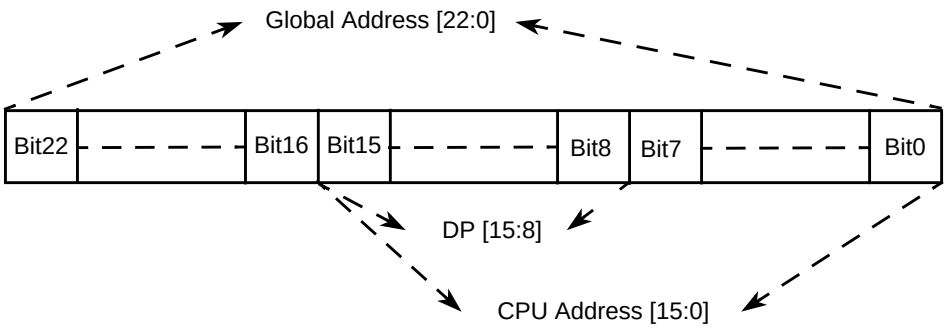

Figure 18-9. DIRECT Address Mapping

Bits [22:16] of the global address will be formed by the GPAGE[6:0] bits in case the CPU executes a global instruction in direct addressing mode or by the appropriate local address to the global address expansion (refer to Section 18.4.2.1.1, “Expansion of the Local Address Map).

Example 18-2. This example demonstrates usage of the Direct Addressing Mode

```
MOVB    #0x80,DIRECT     ;Set DIRECT register to 0x80. Write once only.
                         ;Global data accesses to the range 0xXX_80XX can be direct.
                         ;Logical data accesses to the range 0x80XX are direct.

LDY     <00              ;Load the Y index register from 0x8000 (direct access).
                         ;< operator forces direct access on some assemblers but in
                         ;many cases assemblers are “direct page aware” and can
```

```
;automatically select direct mode.
```

18.3.2.5 MMC Control Register (MMCCTL1)

Address: 0x0013 PRR

	7	6	5	4	3	2	1	0
R	0	0	0	0	0	EROMON	ROMHM	ROMON
W								
Reset	0	0	0	0	0	EROMCTL	0	ROMCTL

= Unimplemented or Reserved

Figure 18-10. MMC Control Register (MMCCTL1)

Read: Anytime. In emulation modes read operations will return the data from the external bus. In all other modes the data are read from this register.Write: Refer to each bit description. In emulation modes write operations will also be directed to the external bus.

CAUTION

XGATE write access to this register during an CPU access which makes use of this register could lead to unexpected results.

Table 18-10. MMCCTL1 Field Descriptions

Field	Description
2 EROMON	**Enables emulated Flash or ROM memory in the memory map** Write: Never This bit is used in some modes to define the placement of the Emulated Flash or ROM (Refer to Table 18-11) 0 Disables the emulated Flash or ROM in the memory map. 1 Enables the emulated Flash or ROM in the memory map.
1 ROMHM	**FLASH or ROM only in higher Half of Memory Map** Write: Once in normal and emulation modes and anytime in special modes 0 The fixed page of Flash or ROM can be accessed in the lower half of the memory map. Accesses to 0x4000–0x7FFF will be mapped to 0x7F_4000-0x7F_7FFF in the global memory space. 1 Disables access to the Flash or ROM in the lower half of the memory map.These physical locations of the Flash or ROM can still be accessed through the program page window. Accesses to 0x4000–0x7FFF will be mapped to 0x14_4000-0x14_7FFF in the global memory space (external access).
0 ROMON	**Enable FLASH or ROM in the memory map** Write: Once in normal and emulation modes and anytime in special modes. This bit is used in some modes to define the placement of the ROM (Refer to Table 18-11) 0 Disables the Flash or ROM from the memory map. 1 Enables the Flash or ROM in the memory map.

EROMON and ROMON control the visibility of the Flash in the memory map for CPU or BDM (not for XGATE). Both local and global memory maps are affected.

Table 18-11. Data Sources when CPU or BDM is Accessing Flash Area

Chip Modes	ROMON	EROMON	DATA SOURCE[1]	Stretch[2]
Normal Single Chip	X	X	Internal Flash	N
Special Single Chip				
Emulation Single Chip	X	0	Emulation Memory	N
	X	1	Internal Flash	
Normal Expanded	0	X	External Application	Y
	1	X	Internal Flash	N
Emulation Expanded	0	X	External Application	Y
	1	0	Emulation Memory	N
	1	1	Internal Flash	
Special Test	0	X	External Application	N
	1	X	Internal Flash	

1 Internal Flash means Flash resources inside the MCU are read/written.
Emulation memory means resources inside the emulator are read/written (PRU registers, flash replacement, RAM, EEPROM and register space are always considered internal).
External application means resources residing outside the MCU are read/written.

2 The external access stretch mechanism is part of the EBI module (refer to EBI Block Guide for details).

18.3.2.6 RAM Page Index Register (RPAGE)

Address: 0x0016

	7	6	5	4	3	2	1	0
R/W	RP7	RP6	RP5	RP4	RP3	RP2	RP1	RP0
Reset	1	1	1	1	1	1	0	1

Figure 18-11. RAM Page Index Register (RPAGE)

Read: Anytime

Write: Anytime

These eight index bits are used to page 4 KByte blocks into the RAM page window located in the local (CPU or BDM) memory map from address 0x1000 to address 0x1FFF (see Figure 18-12). This supports accessing up to 1022 Kbytes of RAM (in the Global map) within the 64 KByte Local map. The RAM page index register is effectively used to construct paged RAM addresses in the Local map format.

CAUTION

XGATE write access to this register during an CPU access which makes use of this register could lead to unexpected results.

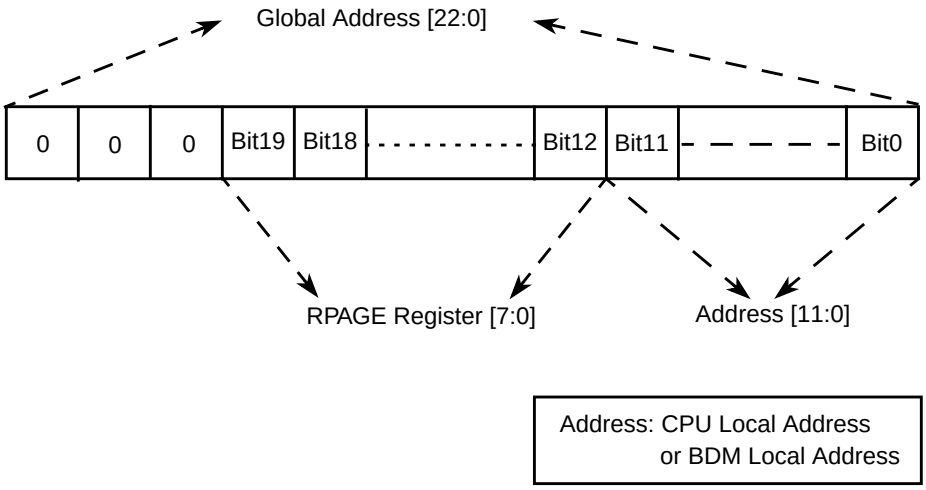

Figure 18-12. RPAGE Address Mapping

NOTE

Because RAM page 0 has the same global address as the register space, it is possible to write to registers through the RAM space when RPAGE = 0x00.

Table 18-12. RPAGE Field Descriptions

Field	Description
7–0 RP[7:0]	**RAM Page Index Bits 7–0** — These page index bits are used to select which of the 256 RAM array pages is to be accessed in the RAM Page Window.

The reset value of 0xFD ensures that there is a linear RAM space available between addresses 0x1000 and 0x3FFF out of reset.

The fixed 4K page from 0x2000–0x2FFF of RAM is equivalent to page 254 (page number 0xFE).

The fixed 4K page from 0x3000–0x3FFF of RAM is equivalent to page 255 (page number 0xFF).

18.3.2.7 EEPROM Page Index Register (EPAGE)

Address: 0x0017

	7	6	5	4	3	2	1	0
R W	EP7	EP6	EP5	EP4	EP3	EP2	EP1	EP0
Reset	1	1	1	1	1	1	1	0

Figure 18-13. EEPROM Page Index Register (EPAGE)

Read: Anytime

Write: Anytime

These eight index bits are used to page 1 KByte blocks into the EEPROM page window located in the local (CPU or BDM) memory map from address 0x0800 to address 0x0BFF (see Figure 18-14). This supports accessing up to 256 Kbytes of EEPROM (in the Global map) within the 64 KByte Local map. The EEPROM page index register is effectively used to construct paged EEPROM addresses in the Local map format.

CAUTION

XGATE write access to this register during an CPU access which makes use of this register could lead to unexpected results.

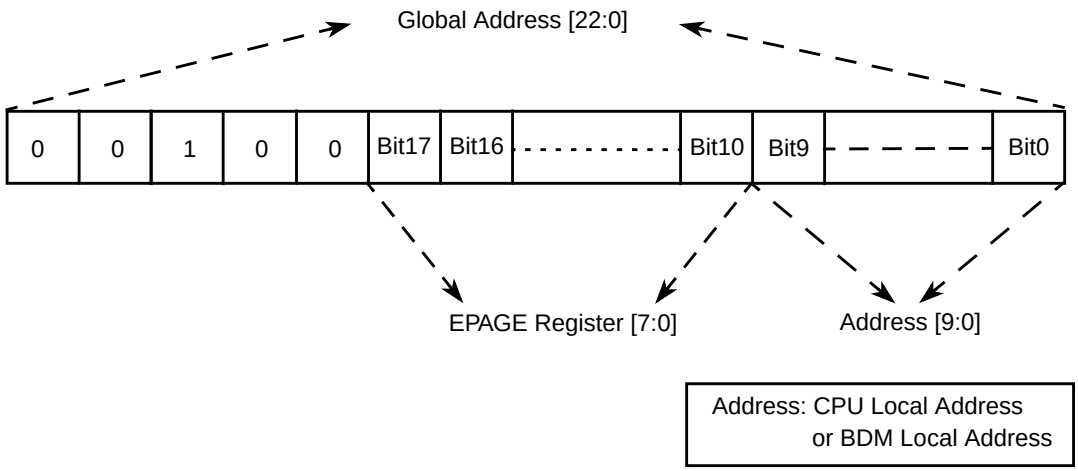

Figure 18-14. EPAGE Address Mapping

Table 18-13. EPAGE Field Descriptions

Field	Description
7–0 EP[7:0]	**EEPROM Page Index Bits 7–0** — These page index bits are used to select which of the 256 EEPROM array pages is to be accessed in the EEPROM Page Window.

The reset value of 0xFE ensures that there is a linear EEPROM space available between addresses 0x0800 and 0x0FFF out of reset.

The fixed 1K page 0x0C00–0x0FFF of EEPROM is equivalent to page 255 (page number 0xFF).

18.3.2.8 Program Page Index Register (PPAGE)

Address: 0x0030

	7	6	5	4	3	2	1	0
R W	PIX7	PIX6	PIX5	PIX4	PIX3	PIX2	PIX1	PIX0
Reset	1	1	1	1	1	1	1	0

Figure 18-15. Program Page Index Register (PPAGE)

Read: Anytime

Write: Anytime

These eight index bits are used to page 16 KByte blocks into the Flash page window located in the local (CPU or BDM) memory map from address 0x8000 to address 0xBFFF (see Figure 18-16). This supports accessing up to 4 Mbytes of Flash (in the Global map) within the 64 KByte Local map. The PPAGE age index register is effectively used to construct paged Flash addresses in the Local map format. The CPU has special access to read and write this register directly during execution of CALL and RTC instructions. .

CAUTION

XGATE write access to this register during an CPU access which makes use of this register could lead to unexpected results.

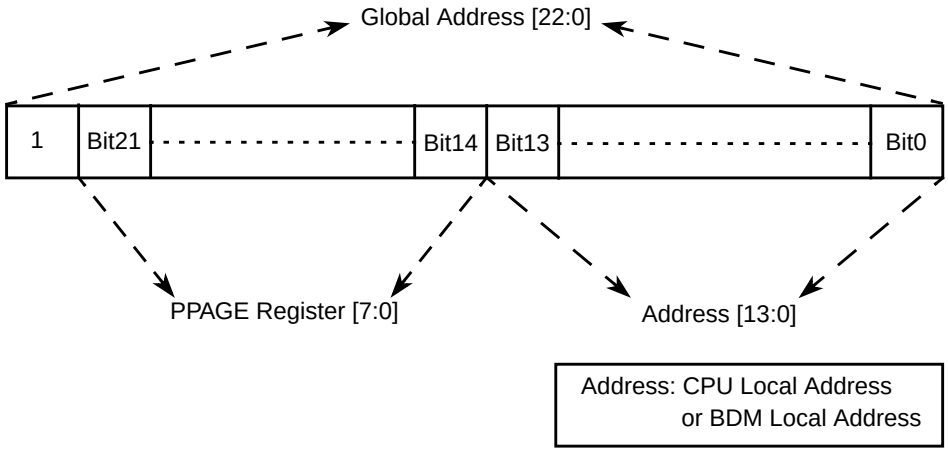

Figure 18-16. PPAGE Address Mapping

NOTE

Writes to this register using the special access of the CALL and RTC instructions will be complete before the end of the instruction execution.

Table 18-14. PPAGE Field Descriptions

Field	Description
7–0 PIX[7:0]	**Program Page Index Bits 7–0** — These page index bits are used to select which of the 256 FLASH or ROM array pages is to be accessed in the Program Page Window.

The fixed 16K page from 0x4000–0x7FFF (when ROMHM = 0) is the page number 0xFD.

The reset value of 0xFE ensures that there is linear Flash space available between addresses 0x4000 and 0xFFFF out of reset.

The fixed 16K page from 0xC000-0xFFFF is the page number 0xFF.

18.3.2.9 RAM Write Protection Control Register (RAMWPC)

Address: 0x011C

	7	6	5	4	3	2	1	0
Reset	0	0	0	0	0	0	0	0

= Unimplemented or Reserved

Figure 18-17. RAM Write Protection Control Register (RAMWPC)

Read: Anytime

Write: Anytime

Table 18-15. RAMWPC Field Descriptions

Field	Description
0 RWPE	**RAM Write Protection Enable** — This bit enables the RAM write protection mechanism. When the RWPE bit is cleared, there is no write protection and any memory location is writable by the CPU module and the XGATE module. When the RWPE bit is set the write protection mechanism is enabled and write access of the CPU or to the XGATE RAM region. Write access performed by the XGATE module to outside of the XGATE RAM region or the shared region is suppressed as well in this case. 0 RAM write protection check is disabled, region boundary registers can be written. 1 RAM write protection check is enabled, region boundary registers cannot be written.
1 AVIE	**CPU Access Violation Interrupt Enable** — This bit enables the Access Violation Interrupt. If AVIE is set and AVIF is set, an interrupt is generated. 0 CPU Access Violation Interrupt Disabled. 1 CPU Access Violation Interrupt Enabled.
0 AVIF	**CPU Access Violation Interrupt Flag** — When set, this bit indicates that the CPU has tried to write a memory location inside the XGATE RAM region. This flag can be reset by writing ’1’ to the AVIF bit location. 0 No access violation by the CPU was detected. 1 Access violation by the CPU was detected.

18.3.2.10 RAM XGATE Upper Boundary Register (RAMXGU)

Address: 0x011D

	7	6	5	4	3	2	1	0
R	1	XGU6	XGU5	XGU4	XGU3	XGU2	XGU1	XGU0
W								
Reset	1	1	1	1	1	1	1	1

= Unimplemented or Reserved

Figure 18-18. RAM XGATE Upper Boundary Register (RAMXGU)

Read: Anytime

Write: Anytime when RWPE = 0

Table 18-16. RAMXGU Field Descriptions

Field	Description
6–0 XGU[6:0]	**XGATE Region Upper Boundary Bits 6-0** — These bits define the upper boundary of the RAM region allocated to the XGATE module in multiples of 256 bytes. The 256 byte block selected by this register is included in the region. See Figure 18-25 for details.

18.3.2.11 RAM Shared Region Lower Boundary Register (RAMSHL)

Address: 0x011E

	7	6	5	4	3	2	1	0
R	1	SHL6	SHL5	SHL4	SHL3	SHL2	SHL1	SHL0
W								
Reset	1	1	1	1	1	1	1	1

= Unimplemented or Reserved

Figure 18-19. RAM Shared Region Lower Boundary Register (RAMSHL)

Read: Anytime

Write: Anytime when RWPE = 0

Table 18-17. RAMSHL Field Descriptions

Field	Description
6–0 SHL[6:0]	**RAM Shared Region Lower Boundary Bits 6–0** — These bits define the lower boundary of the shared memory region in multiples of 256 bytes. The block selected by this register is included in the region. See Figure 18-25 for details.

18.3.2.12 RAM Shared Region Upper Boundary Register (RAMSHU)

Address: 0x011F

	7	6	5	4	3	2	1	0
R	1	SHU6	SHU5	SHU4	SHU3	SHU2	SHU1	SHU0
W								
Reset	1	1	1	1	1	1	1	1

= Unimplemented or Reserved

Figure 18-20. RAM Shared Region Upper Boundary Register (RAMSHU)

Read: Anytime

Write: Anytime when RWPE = 0

Table 18-18. RAMSHU Field Descriptions

Field	Description
6–0 SHU[6:0]	**RAM Shared Region Upper Boundary Bits 6–0** — These bits define the upper boundary of the shared memory in multiples of 256 bytes. The block selected by this register is included in the region. See Figure 18-25 for details.

18.4 Functional Description

The MMC block performs several basic functions of the S12X sub-system operation: MCU operation modes, priority control, address mapping, select signal generation and access limitations for the system. Each aspect is described in the following subsections.

18.4.1 MCU Operating Mode

- Normal single-chip mode

  There is no external bus in this mode. The MCU program is executed from the internal memory and no external accesses are allowed.
- Special single-chip mode

  This mode is generally used for debugging single-chip operation, boot-strapping or security related operations. The active background debug mode is in control of the CPU code execution and the BDM firmware is waiting for serial commands sent through the BKGD pin. There is no external bus in this mode.
- Emulation single-chip mode

  Tool vendors use this mode for emulation systems in which the user's target application is normal single-chip mode. Code is executed from external or internal memory depending on the set-up of the EROMON bit (see Section 18.3.2.5, "MMC Control Register (MMCCTL1)). The external bus is active in both cases to allow observation of internal operations (internal visibility).

- Normal expanded mode

  The external bus interface is configured as an up to 23-bit address bus, 8 or 16-bit data bus with dedicated bus control and status signals. This mode allows 8 or 16-bit external memory and peripheral devices to be interfaced to the system. The fastest external bus rate is half of the internal bus rate. An external signal can be used in this mode to cause the external bus to wait as desired by the external logic.
- Emulation expanded mode

  Tool vendors use this mode for emulation systems in which the user's target application is normal expanded mode.
- Special test mode

  This mode is an expanded mode for factory test.

18.4.2 Memory Map Scheme

18.4.2.1 CPU and BDM Memory Map Scheme

The BDM firmware lookup tables and BDM register memory locations share addresses with other modules; however they are not visible in the memory map during user's code execution. The BDM memory resources are enabled only during the READ_BD and WRITE_BD access cycles to distinguish between accesses to the BDM memory area and accesses to the other modules. (Refer to BDM Block Guide for further details).

When the MCU enters active BDM mode, the BDM firmware lookup tables and the BDM registers become visible in the local memory map in the range 0xFF00-0xFFFF (global address 0x7F_FF00 - 0x7F_FFFF) and the CPU begins execution of firmware commands or the BDM begins execution of hardware commands. The resources which share memory space with the BDM module will not be visible in the memory map during active BDM mode.

Please note that after the MCU enters active BDM mode the BDM firmware lookup tables and the BDM registers will also be visible between addresses 0xBF00 and 0xBFFF if the PPAGE register contains value of 0xFF.

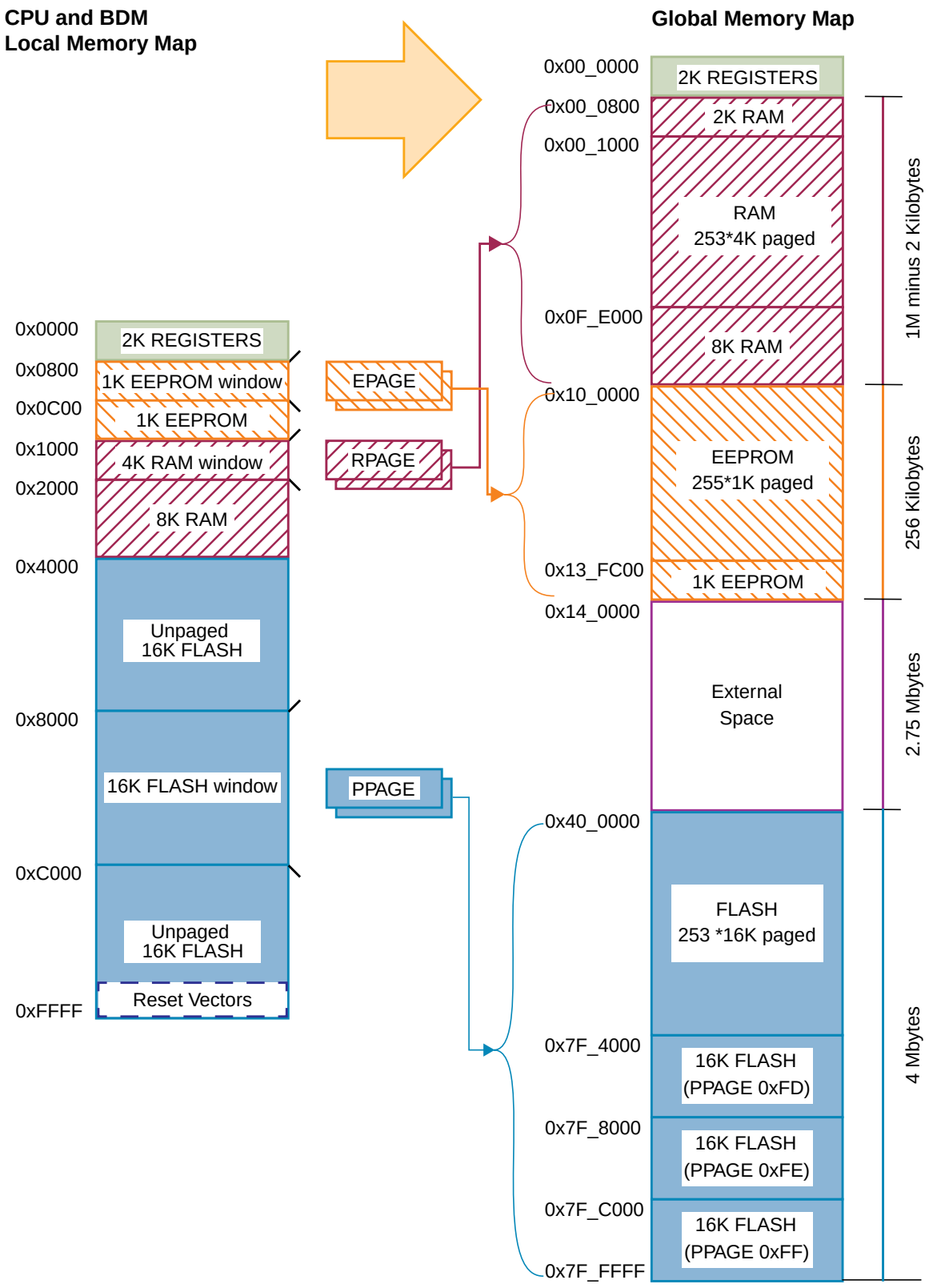

Figure 18-21. Expansion of the Local Address Map

18.4.2.1.1 Expansion of the Local Address Map

Expansion of the CPU Local Address Map

The program page index register in MMC allows accessing up to 4 Mbyte of FLASH or ROM in the global memory map by using the eight page index bits to page 256 16 Kbyte blocks into the program page window located from address 0x8000 to address 0xBFFF in the local CPU memory map.

The page value for the program page window is stored in the PPAGE register. The value of the PPAGE register can be read or written by normal memory accesses as well as by the CALL and RTC instructions (see Section 18.5.1, “CALL and RTC Instructions).

Control registers, vector space and parts of the on-chip memories are located in unpaged portions of the 64-kilobyte local CPU address space.

The starting address of an interrupt service routine must be located in unpaged memory unless the user is certain that the PPAGE register will be set to the appropriate value when the service routine is called. However an interrupt service routine can call other routines that are in paged memory. The upper 16-kilobyte block of the local CPU memory space (0xC000–0xFFFF) is unpaged. It is recommended that all reset and interrupt vectors point to locations in this area or to the other unpaged sections of the local CPU memory map.

Table 18-19 Table 18-12 summarizes mapping of the address bus in Flash/External space based on the address, the PPAGE register value and value of the ROMHM bit in the MMCCTL1 register.

Table 18-19. Global FLASH/ROM Allocated

Local CPU Address	ROMHM	External Access	Global Address
0x4000–0x7FFF	0	No	0x7F_4000 –0x7F_7FFF
	1	Yes	0x14_4000–0x14_7FFF
0x8000–0xBFFF	N/A	No[1]	0x40_0000–0x7F_FFFF
	N/A	Yes[1]	
0xC000–0xFFFF	N/A	No	0x7F_C000–0x7F_FFFF

[1] The internal or the external bus is accessed based on the size of the memory resources implemented on-chip. Please refer to Figure 1-23 for further details.

The RAM page index register allows accessing up to 1 Mbyte –2 Kbytes of RAM in the global memory map by using the eight RPAGE index bits to page 4 Kbyte blocks into the RAM page window located in the local CPU memory space from address 0x1000 to address 0x1FFF. The EEPROM page index register EPAGE allows accessing up to 256 Kbytes of EEPROM in the system by using the eight EPAGE index bits to page 1 Kbyte blocks into the EEPROM page window located in the local CPU memory space from address 0x0800 to address 0x0BFF.

Expansion of the BDM Local Address Map

PPAGE, RPAGE, and EPAGE registers are also used for the expansion of the BDM local address to the global address. These registers can be read and written by the BDM.

The BDM expansion scheme is the same as the CPU expansion scheme.

18.4.2.2 Global Addresses Based on the Global Page

CPU Global Addresses Based on the Global Page

The seven global page index bits allow access to the full 8 Mbyte address map that can be accessed with 23 address bits. This provides an alternative way to access all of the various pages of FLASH, RAM and EEPROM as well as additional external memory.

The GPAGE Register is used only when the CPU is executing a global instruction (see Section 18.3.2.3, “Global Page Index Register (GPAGE)). The generated global address is the result of concatenation of the CPU local address [15:0] with the GPAGE register [22:16] (see Figure 18-7).

BDM Global Addresses Based on the Global Page

The seven BDMGPR Global Page index bits allow access to the full 8 Mbyte address map that can be accessed with 23 address bits. This provides an alternative way to access all of the various pages of FLASH, RAM and EEPROM as well as additional external memory.

The BDM global page index register (BDMGPR) is used only in the case the CPU is executing a firmware command which uses a global instruction (like GLDD, GSTD) or by a BDM hardware command (like WRITE_W, WRITE_BYTE, READ_W, READ_BYTE). See the BDM Block Guide for further details.

The generated global address is a result of concatenation of the BDM local address with the BDMGPR register [22:16] in the case of a hardware command or concatenation of the CPU local address and the BDMGPR register [22:16] in the case of a firmware command (see Figure 18-22).

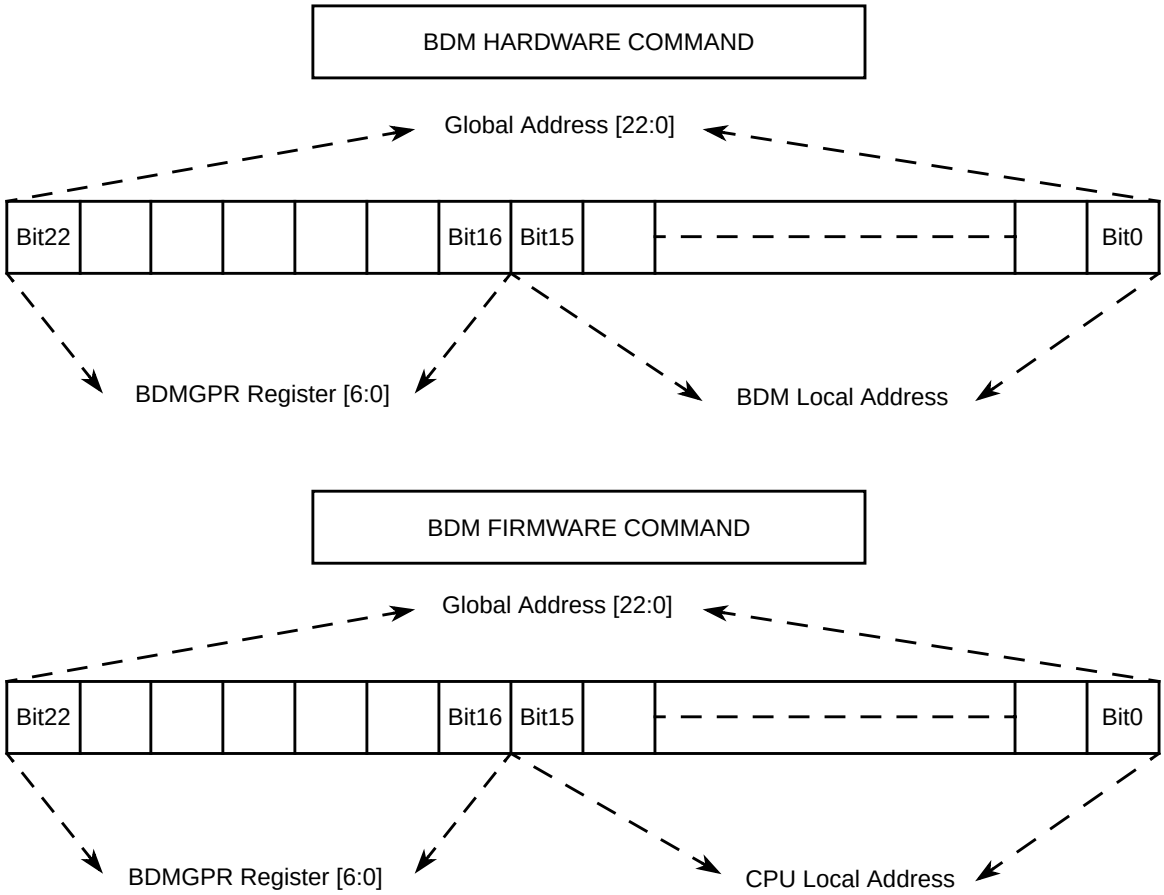

Figure 18-22. BDMGPR Address Mapping

18.4.2.3 Implemented Memory Map

The global memory spaces reserved for the internal resources (RAM, EEPROM, and FLASH) are not determined by the MMC module. Size of the individual internal resources are however fixed in the design of the device cannot be changed by the user. Please refer to the Device User Guide for further details. Figure 18-23 and Table 18-20 show the memory spaces occupied by the on-chip resources. Please note that the memory spaces have fixed top addresses.

Table 18-20. Global Implemented Memory Space

Internal Resource	$Address
RAM	RAM_LOW = 0x10_0000 minus RAMSIZE[1]
EEPROM	EEPROM_LOW = 0x14_0000 minus EEPROMSIZE[2]

[1] RAMSIZE is the hexadecimal value of RAM SIZE in bytes

[2] EEPROMSIZE is the hexadecimal value of EEPROM SIZE in bytes

When the device is operating in expanded modes except emulation single-chip mode, accesses to global addresses which are not occupied by the on-chip resources (unimplemented areas or external memory space) result in accesses to the external bus (see Figure 18-23).

In emulation single-chip mode, accesses to global addresses which are not occupied by the on-chip resources (unimplemented areas) result in accesses to the external bus. CPU accesses to global addresses which are occupied by external memory space result in an illegal access reset (system reset). BDM accesses to the external space are performed but the data will be undefined.

In single-chip modes accesses by the CPU (except for firmware commands) to any of the unimplemented areas (see Figure 18-23) will result in an illegal access reset (system reset). BDM accesses to the unimplemented areas are allowed but the data will be undefined.

No misaligned word access from the BDM module will occur; these accesses are blocked in the BDM module (Refer to BDM Block Guide).

Misaligned word access to the last location of RAM is performed but the data will be undefined.

Misaligned word access to the last location of any global page (64 Kbyte) by any global instruction, is performed by accessing the last byte of the page and the first byte of the same page, considering the above mentioned misaligned access cases.

The non-internal resources (unimplemented areas or external space) are used to generate the chip selects (CS0,CS1,CS2 and CS3) (see Figure 18-23), which are only active in normal expanded, emulation expanded and special test modes (see Section 18.3.2.1, “MMC Control Register (MMCCTL0)).

Table 18-21 shows the address boundaries of each chip select and the relationship with the implemented resources (internal) parameters.

Table 18-21. Global Chip Selects Memory Space

Chip Selects	Bottom Address	Top Address
$\overline{CS3}$	0x00_0800	0x0F_FFFF minus RAMSIZE[1]
$\overline{CS2}$	0x10_0000	0x13_FFFF minus EEPROMSIZE[2]
$\overline{CS2}$[3]	0x14_0000	0x1F_FFFF
$\overline{CS1}$	0x20_0000	0x3F_FFFF
$\overline{CS0}$[4]	0x40_0000	0x7F_FFFF minus FLASHSIZE[5]

1 External RPAGE accesses in (NX, EX and ST)
2 External EPAGE accesses in (NX, EX and ST)
3 When ROMHM is set (see ROMHM in Table 18-19) the $\overline{CS2}$ is asserted in the space occupied by this on-chip memory block.
4 When the internal NVM is enabled (see ROMON in Section 18.3.2.5, “MMC Control Register (MMCCTL1)) the $\overline{CS0}$ is not asserted in the space occupied by this on-chip memory block.
5 External PPAGE accesses in (NX, EX and ST)

Figure 18-23. Local to Implemented Global Address Mapping (Without GPAGE)

18.4.2.4 XGATE Memory Map Scheme

18.4.2.4.1 Expansion of the XGATE Local Address Map

The XGATE 64 Kbyte memory space allows access to internal resources only (Registers, RAM, and FLASH). The 2 Kilobyte register address range is the same register address range as for the CPU and the BDM module (see Table 18-22).

XGATE can access the FLASH in single chip modes, even when the MCU is secured. In expanded modes, XGATE can not access the FLASH when MCU is secured.

The local address of the XGATE RAM access is translated to the global RAM address range. The XGATE shares the RAM resource with the CPU and the BDM module (see Table 18-22).

XGATE RAM size (XGRAMSIZE) may be lower or equal to the MCU RAM size (RAMSIZE).

The local address of the XGATE FLASH access is translated to the global address as defined by Table 18-22.

Table 18-22. XGATE Implemented Memory Space

Internal Resource	$Address
XGATE RAM	XGRAM_LOW = 0x0F_0000 plus (0x1_0000 minus XGRAMSIZE)[1]
XGATE FLASH	XGFLASH_HIGH = 0x78_0000 plus (0xFFFF minus XGRAMSIZE)

1 XGRAMSIZE is the hexadecimal value of XGATE RAM SIZE in bytes.

Example 18-3. is a general example of the XGATE memory map implementation.

Example 18-3.

The MCU FLASHSIZE is 64 Kbytes (0x10000) and MCU RAMSIZE is 32 Kbytes (0x8000).

The XGATE RAMSIZE is 16 Kbytes (0x4000).

The space occupied by the XGATE RAM in the global address space will be:

Bottom address: (0x10_0000 minus 0x4000) = 0x0F_C000

Top address: 0x0F_FFFF

XGATE accesses to local address range 0x0800–0xBFFF will result in accesses to the following FLASH block in the global address space:

Bottom address: 0x78_0800

Top address: (0x78_FFFF minus 0x4000) = 0x78_BFFF

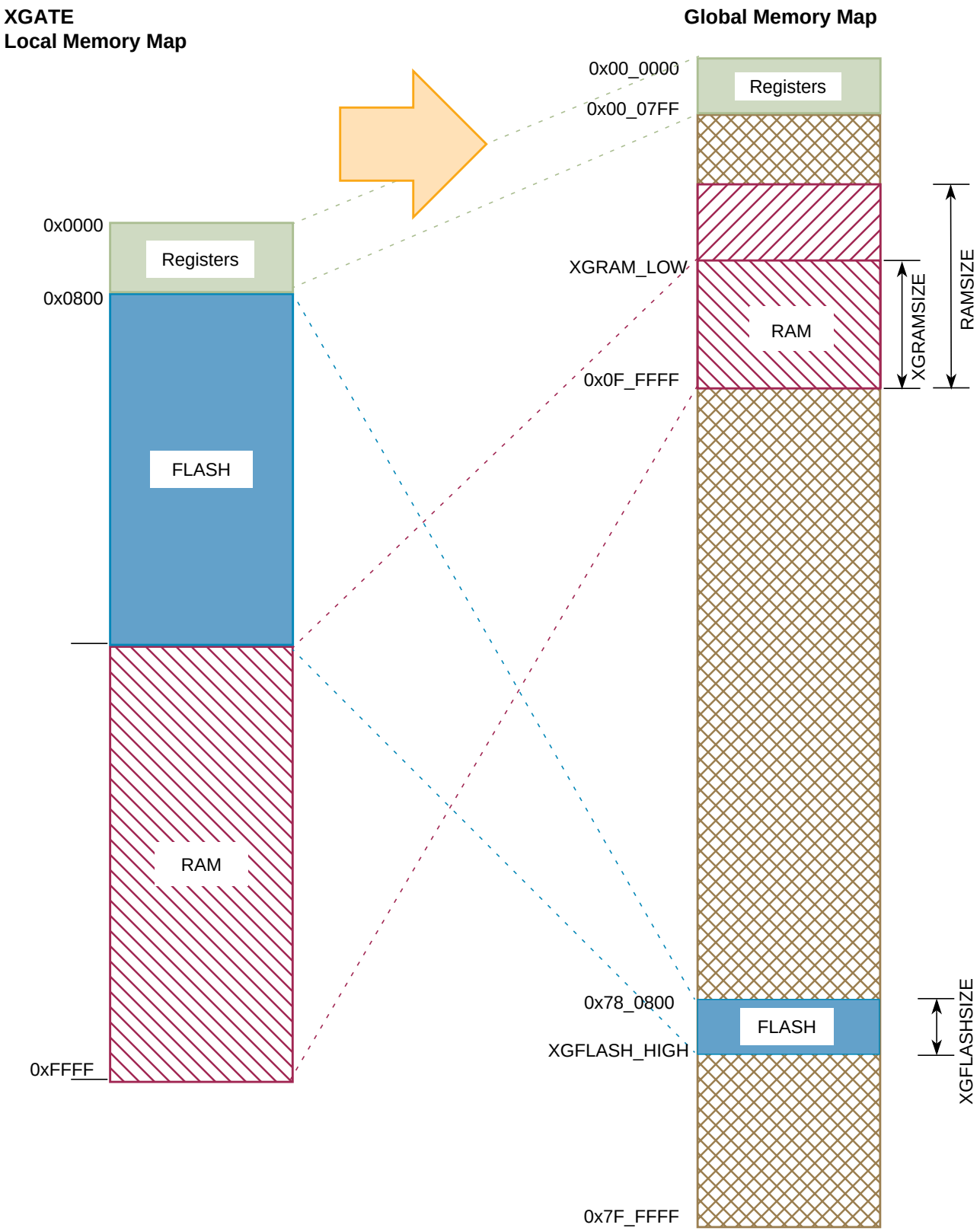

Figure 18-24. XGATE Global Address Mapping

18.4.3 Chip Access Restrictions

18.4.3.1 Illegal XGATE Accesses

A possible access error is flagged by the MMC and signalled to XGATE under the following conditions:

- XGATE performs misaligned word (in case of load-store or opcode or vector fetch accesses).
- XGATE accesses the register space (in case of opcode or vector fetch).
- XGATE performs a write to Flash in any modes (in case of load-store access).
- XGATE performs an access to a secured Flash in expanded modes (in case of load-store or opcode or vector fetch accesses).
- XGATE performs an access to an unimplemented area (in case of load-store or opcode or vector fetch accesses).
- XGATE performs a write to non-XGATE region in RAM (RAM protection mechanism) (in case of load-store access).

For further details refer to the XGATE Block Guide.

18.4.3.2 Illegal CPU Accesses

After programming the protection mechanism registers (see Figure 18-17, Figure 18-18, Figure 18-19, and Figure 18-20) and setting the RWPE bit (see Figure 18-17) there are 3 regions recognized by the MMC module:

1. XGATE RAM region
2. CPU RAM region
3. Shared Region (XGATE AND CPU)

If the RWPE bit is set the CPU write accesses into the XGATE RAM region are blocked. If the CPU tries to write the XGATE RAM region the AVIF bit is set and an interrupt is generated if enabled. Furthermore if the XGATE tries to write to outside of the XGATE RAM or shared regions and the RWPE bit is set, the write access is suppressed and the access error will be flagged to the XGATE module (see Section 18.4.3.1, “Illegal XGATE Accesses and the XGATE Block Guide).

The bottom address of the XGATE RAM region always starts at the lowest implemented RAM address.

The values stored in the boundary registers define the boundary addresses in 256 byte steps. The 256 byte block selected by any of the registers is always included in the respective region. For example setting the shared region lower boundary register (RAMSHL) to 0xC1 and the shared region upper boundary register (RAMSHU) to 0xE0 defines the shared region from address 0x0F_C100 to address 0x0F_E0FF in the global memory space (see Figure 18-20).

The interrupt requests generated by the MMC are listed in Table 18-23. Refer to the Device User Guide for the related interrupt vector address and interrupt priority.

The following conditions must be satisfied to ensure correct operation of the RAM protection mechanism:

- Value stored in RAMXGU must be lower than the value stored in RAMSHL.
- Value stored RAMSHL must be lower or equal than the value stored in RAMSHU.

Table 18-23. RAM Write Protection Interrupt Vectors

Interrupt Source	CCR Mask	Local Enable
CPU access violation	I Bit	AVIE in RAMWPC

Figure 18-25. RAM write protection scheme

18.4.4 Chip Bus Control

The MMC controls the address buses and the data buses that interface the S12X masters (CPU, BDMand XGATE) with the rest of the system (master buses). In addition the MMC handles all CPU read data bus swapping operations. All internal and external resources are connected to specific target buses (see Figure 18-26[1]).

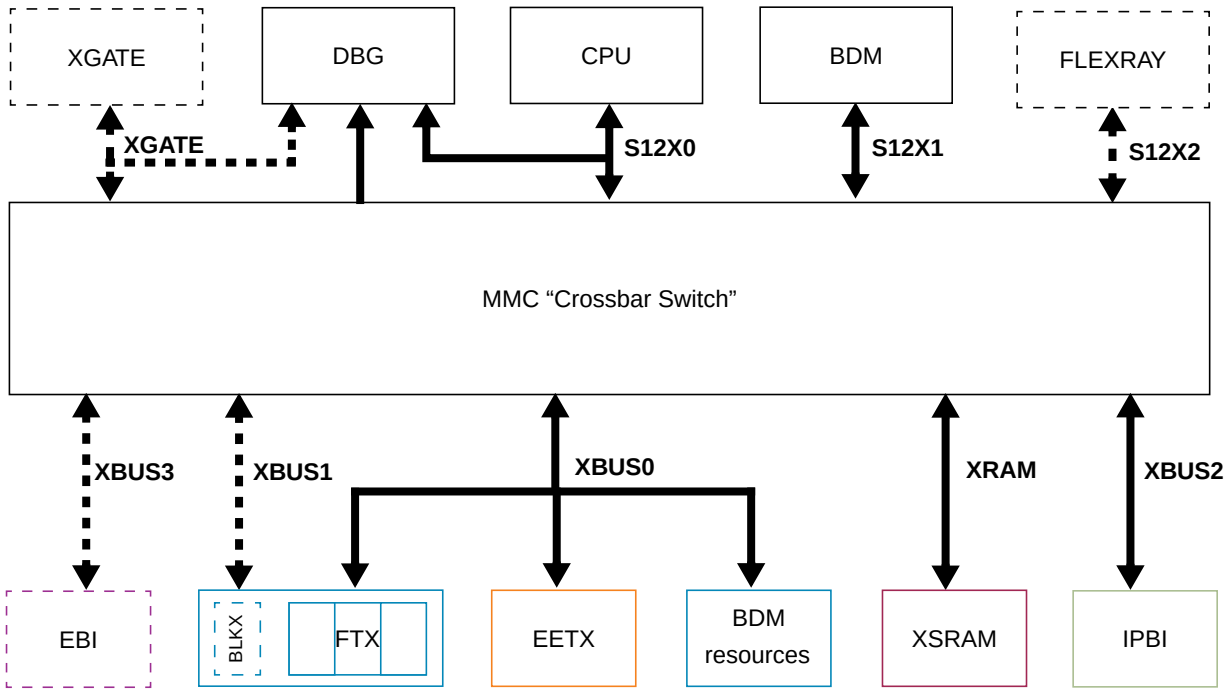

Figure 18-26. MMC Block Diagram

1. Doted blocks and lines are optional. Please refer to the Device User Guide for their availlibilities.

18.4.4.1 Master Bus Prioritization regarding Access Conflicts on Target Buses

The arbitration scheme allows only one master to be connected to a target at any given time. The following rules apply when prioritizing accesses from different masters to the same target bus:

- CPU always has priority over BDM and XGATE.
- XGATE access to PRU registers constitutes a special case. It is always granted and stalls the CPU for its duration.
- XGATE has priority over BDM.
- BDM has priority over CPU and XGATE when its access is stalled for more than 128 cycles. In the later case the suspect master will be stalled after finishing the current operation and the BDM will gain access to the bus.
- In emulation modes all internal accesses are visible on the external bus as well and the external bus is used during access to the PRU registers.

18.4.5 Interrupts

18.4.5.1 Outgoing Interrupt Requests

The following interrupt requests can be triggered by the MMC module:

CPU access violation: The CPU access violation signals to the CPU detection of an error condition in the CPU application code which is resulted in write access to the protected XGATE RAM area (see Section 18.4.3.2, “Illegal CPU Accesses).

18.5 Initialization/Application Information

18.5.1 CALL and RTC Instructions

CALL and RTC instructions are uninterruptable CPU instructions that automate page switching in the program page window. The CALL instruction is similar to the JSR instruction, but the subroutine that is called can be located anywhere in the local address space or in any Flash or ROM page visible through the program page window. The CALL instruction calculates and stacks a return address, stacks the current PPAGE value and writes a new instruction-supplied value to the PPAGE register. The PPAGE value controls which of the 256 possible pages is visible through the 16 Kbyte program page window in the 64 Kbyte local CPU memory map. Execution then begins at the address of the called subroutine.

During the execution of the CALL instruction, the CPU performs the following steps:

1. Writes the current PPAGE value into an internal temporary register and writes the new instruction-supplied PPAGE value into the PPAGE register
2. Calculates the address of the next instruction after the CALL instruction (the return address) and pushes this 16-bit value onto the stack
3. Pushes the temporarily stored PPAGE value onto the stack
4. Calculates the effective address of the subroutine, refills the queue and begins execution at the new address

This sequence is uninterruptable. There is no need to inhibit interrupts during the CALL instruction execution. A CALL instruction can be performed from any address to any other address in the local CPU memory space.

The PPAGE value supplied by the instruction is part of the effective address of the CPU. For all addressing mode variations (except indexed-indirect modes) the new page value is provided by an immediate operand in the instruction. In indexed-indirect variations of the CALL instruction a pointer specifies memory locations where the new page value and the address of the called subroutine are stored. Using indirect addressing for both the new page value and the address within the page allows usage of values calculated at run time rather than immediate values that must be known at the time of assembly.

The RTC instruction terminates subroutines invoked by a CALL instruction. The RTC instruction unstacks the PPAGE value and the return address and refills the queue. Execution resumes with the next instruction after the CALL instruction.

During the execution of an RTC instruction the CPU performs the following steps:

1. Pulls the previously stored PPAGE value from the stack
2. Pulls the 16-bit return address from the stack and loads it into the PC
3. Writes the PPAGE value into the PPAGE register
4. Refills the queue and resumes execution at the return address

This sequence is uninterruptable. The RTC can be executed from anywhere in the local CPU memory space.

The CALL and RTC instructions behave like JSR and RTS instruction, they however require more execution cycles. Usage of JSR/RTS instructions is therefore recommended when possible and CALL/RTC instructions should only be used when needed. The JSR and RTS instructions can be used to access subroutines that are already present in the local CPU memory map (i.e. in the same page in the program memory page window for example). However calling a function located in a different page requires usage of the CALL instruction. The function must be terminated by the RTC instruction. Because the RTC instruction restores contents of the PPAGE register from the stack, functions terminated with the RTC instruction must be called using the CALL instruction even when the correct page is already present in the memory map. This is to make sure that the correct PPAGE value will be present on stack at the time of the RTC instruction execution.

18.5.2 Port Replacement Registers (PRRs)

Registers used for emulation purposes must be rebuilt by the in-circuit emulator hardware to achieve full emulation of single chip mode operation. These registers are called port replacement registers (PRRs) (see Table 1-25). PRRs are accessible from CPU, BDM and XGATE using different access types (word aligned, word-misaligned and byte).

Each access to PRRs will be extended to 2 bus cycles for write or read accesses independent of the operating mode. In emulation modes all write operations result in simultaneous writing to the internal registers (peripheral access) and to the emulated registers (external access) located in the PRU in the emulator. All read operations are performed from external registers (external access) in emulation modes. In all other modes the read operations are performed from the internal registers (peripheral access).

Due to internal visibility of CPU accesses the CPU will be halted during XGATE or BDM access to any PRR. This rule applies also in normal modes to ensure that operation of the device is the same as in emulation modes.

A summary of PRR accesses:

- An aligned word access to a PRR will take 2 bus cycles.
- A misaligned word access to a PRRs will take 4 cycles. If one of the two bytes accessed by the misaligned word access is not a PRR, the access will take only 3 cycles.
- A byte access to a PRR will take 2 cycles.

Table 18-24. PRR Listing

PRR Name	PRR Local Address	PRR Location
PORTA	0x0000	PIM
PORTB	0x0001	PIM
DDRA	0x0002	PIM
DDRB	0x0003	PIM
PORTC	0x0004	PIM
PORTD	0x0005	PIM
DDRC	0x0006	PIM
DDRD	0x0007	PIM
PORTE	0x0008	PIM
DDRE	0x0009	PIM
MMCCTL0	0x000A	MMC
MODE	0x000B	MMC
PUCR	0x000C	PIM
RDRIV	0x000D	PIM
EBICTL0	0x000E	EBI
EBICTL1	0x000F	EBI
Reserved	0x0012	MMC
MMCCTL1	0x0013	MMC
ECLKCTL	0x001C	PIM
Reserved	0x001D	PIM
PORTK	0x0032	PIM
DDRK	0x0033	PIM

18.5.3 On-Chip ROM Control

The MCU offers two modes to support emulation. In the first mode (called generator) the emulator provides the data instead of the internal FLASH and traces the CPU actions. In the other mode (called observer) the internal FLASH provides the data and all internal actions are made visible to the emulator.

18.5.3.1 ROM Control in Single-Chip Modes

In single-chip modes the MCU has no external bus. All memory accesses and program fetches are internal (see Figure 18-27).

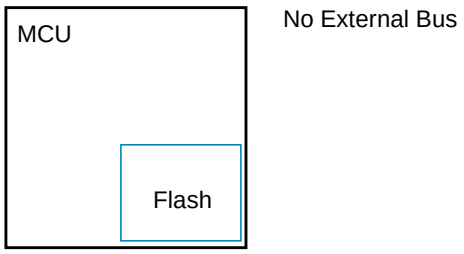

Figure 18-27. ROM in Single Chip Modes

18.5.3.2 ROM Control in Emulation Single-Chip Mode

In emulation single-chip mode the external bus is connected to the emulator. If the EROMON bit is set, the internal FLASH provides the data and the emulator can observe all internal CPU actions on the external bus. If the EROMON bit is cleared, the emulator provides the data (generator) and traces the all CPU actions (see Figure 18-28).

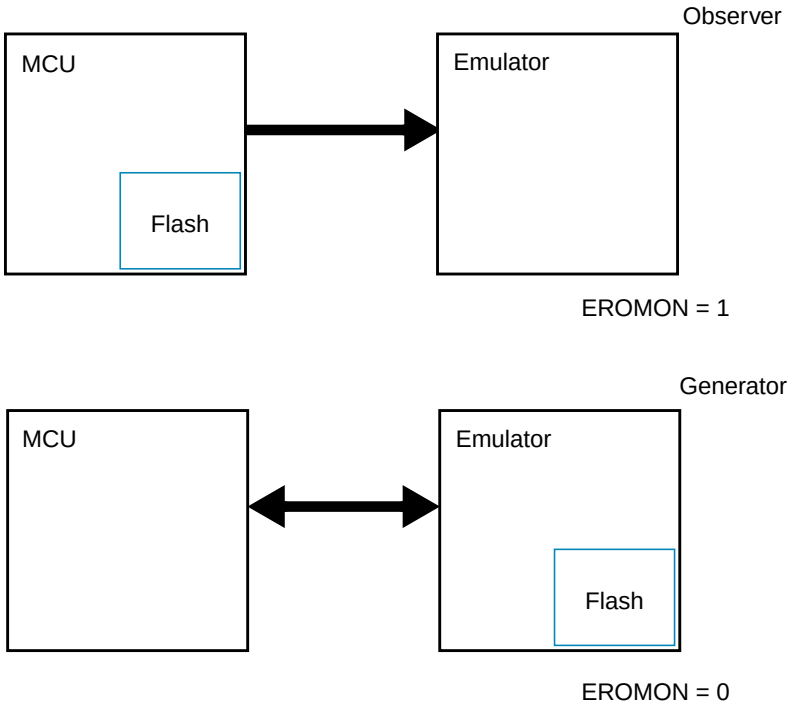

Figure 18-28. ROM in Emulation Single-Chip Mode

18.5.3.3 ROM Control in Normal Expanded Mode

In normal expanded mode the external bus will be connected to the application. If the ROMON bit is set, the internal FLASH provides the data. If the ROMON bit is cleared, the application memory provides the data (see Figure 18-29).

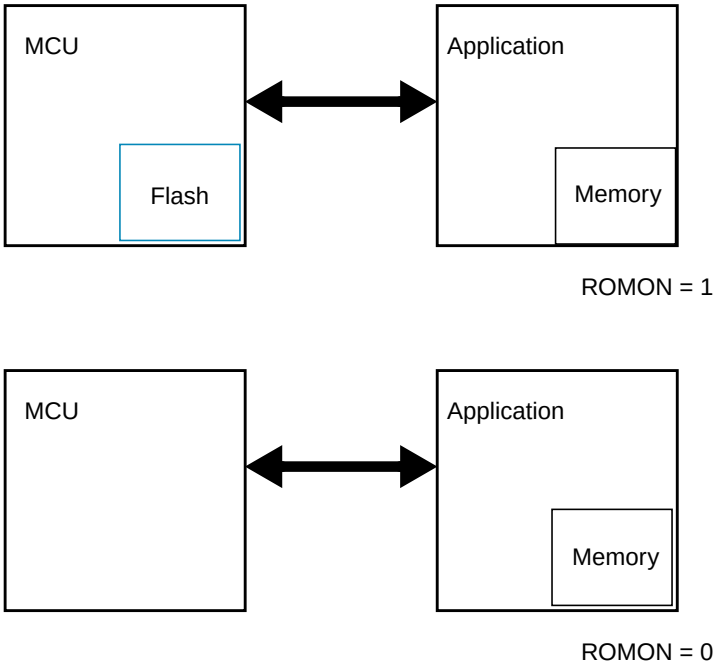

Figure 18-29. ROM in Normal Expanded Mode

18.5.3.4 ROM Control in Emulation Expanded Mode

In emulation expanded mode the external bus will be connected to the emulator and to the application. If the ROMON bit is set, the internal FLASH provides the data. If the EROMON bit is set as well the emulator observes all CPU internal actions, otherwise the emulator provides the data and traces all CPU actions (see Figure 18-30). When the ROMON bit is cleared, the application memory provides the data and the emulator will observe the CPU internal actions (see Figure 18-31).

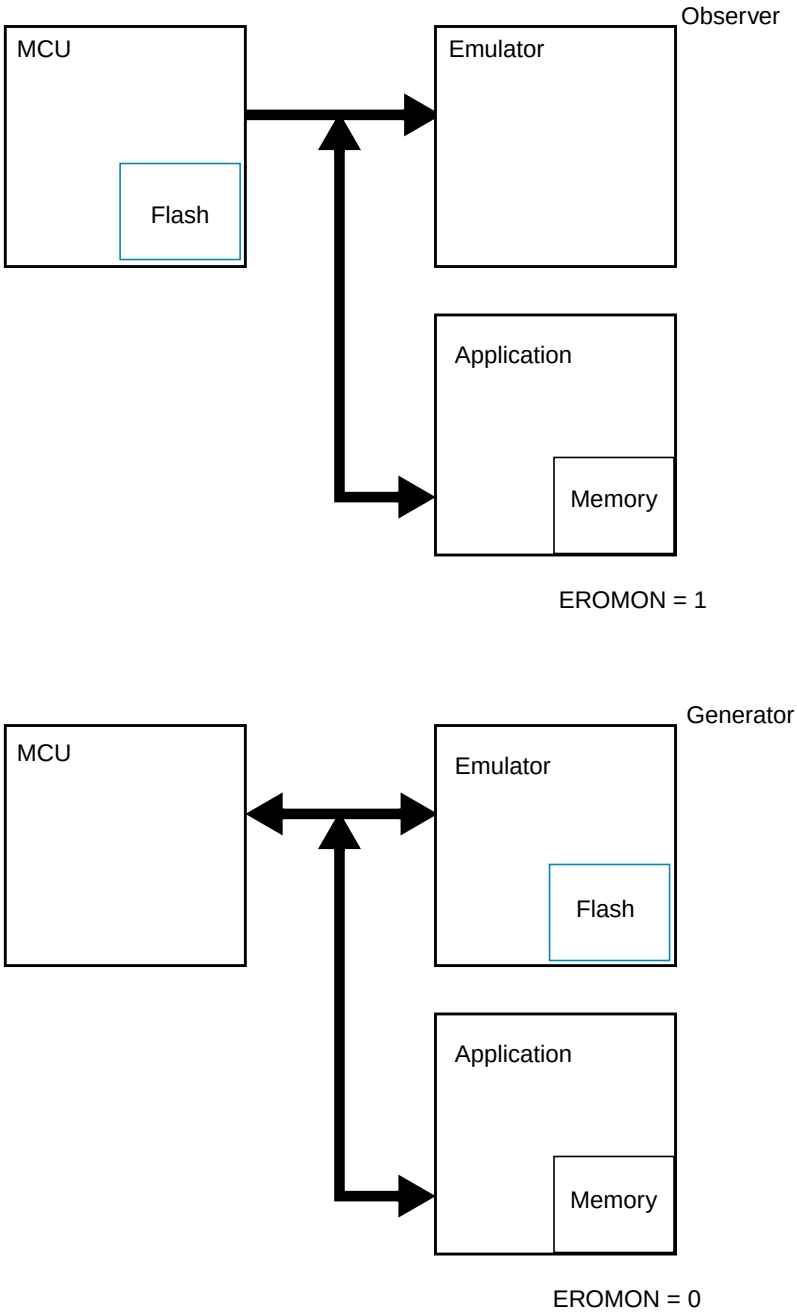

Figure 18-30. ROMON = 1 in Emulation Expanded Mode

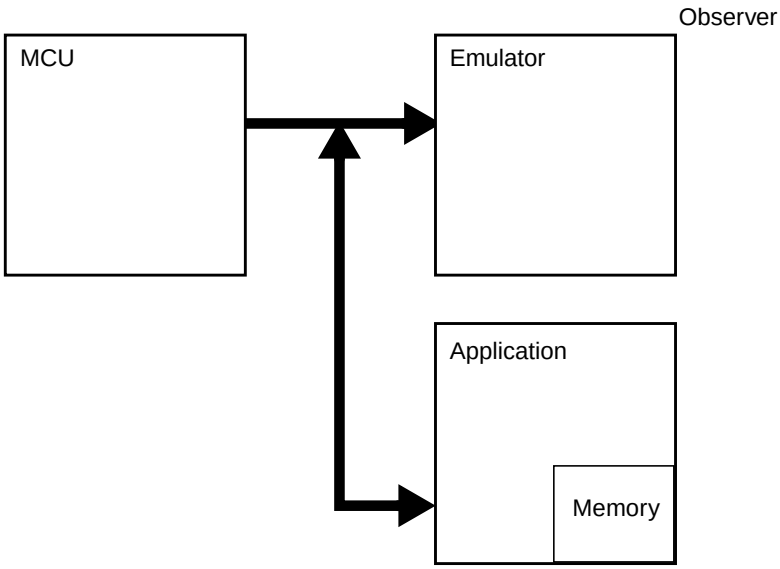

Figure 18-31. ROMON = 0 in Emulation Expanded Mode

18.5.3.5 ROM Control in Special Test Mode

In special test mode the external bus is connected to the application. If the ROMON bit is set, the internal FLASH provides the data, otherwise the application memory provides the data (see Figure 18-32).

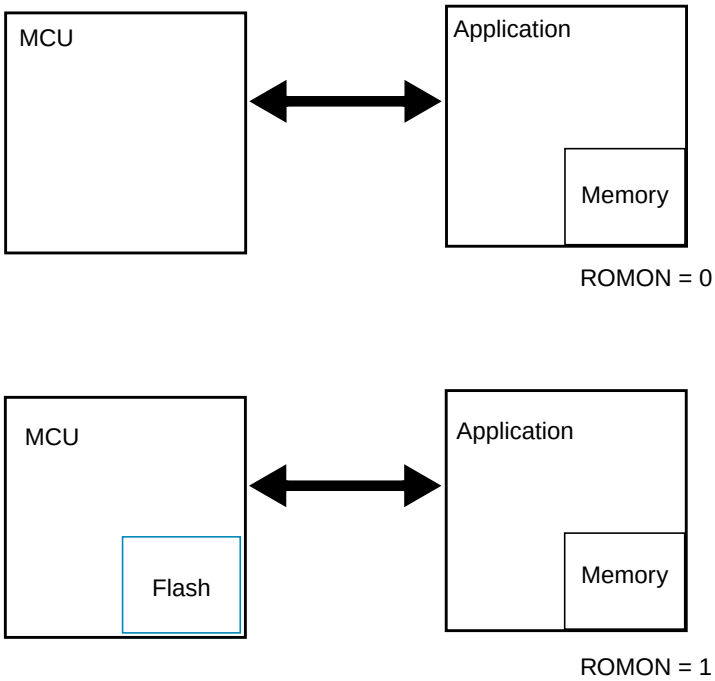

Figure 18-32. ROM in Special Test Mode

Chapter 19
Debug (S12XDBGV2)

19.1 Introduction

The DBG module provides an on-chip trace buffer with flexible triggering capability to allow non-intrusive debug of application software. The DBG module is optimized for the HCS12X 16-bit architecture and allows debugging of both CPU and XGATE module operations.

Typically the DBG module is used in conjunction with the BDM module, whereby the user configures the DBG module for a debugging session over the BDM interface. Once configured the DBG module is armed and the device leaves BDM mode returning control to the user program, which is then monitored by the DBG module. Alternatively, the DBG module can be configured over a serial interface using SWI routines.

Comparators monitor the bus activity of the CPU and XGATE modules. When a match occurs, the control logic can trigger the state sequencer to a new state or tag an opcode. A tag hit, which occurs when the tagged opcode reaches the execution stage of the instruction queue, can also cause a state transition.

On a transition to the final state, bus tracing is triggered and/or a breakpoint can be generated. Independent of comparator matches, a transition to final state with associated tracing and breakpoint can be triggered by the external $\overline{\text{TAGHI}}$ and $\overline{\text{TAGLO}}$ signals. This is done by an XGATE module S/W breakpoint request or by writing to the TRIG control bit.

The trace buffer is visible through a 2-byte window in the register address map and can be read out using standard 16-bit word reads. Tracing is disabled when the MCU system is secured.

19.1.1 Glossary of Terms

COF: Change Of Flow. Change in the program flow due to a conditional branch, indexed jump or interrupt.

BDM : Background Debug Mode

DUG: Device User Guide, describing the features of the device into which the DBG is integrated.

WORD: 16 bit data entity

Data Line : 64 bit data entity

XGATE : S12X family programmable Direct Memory Access Module

CPU : S12X_CPU module

Tag : Tags can be attached to XGATE or CPU opcodes as they enter the instruction pipe. If the tagged opcode reaches the execution stage a tag hit occurs.

19.1.2 Features

- Four comparators (A, B, C, and D):
  - Comparators A and C compare the full address and the full 16-bit data bus
  - Comparators A and C feature a data bus mask register
  - Comparators B and D compare the full address bus only
  - Each comparator can be configured to monitor either CPU or XGATE busses
  - Each comparator features control of R/W and byte/word access cycles
  - Comparisons can be used as triggers for the state sequencer
- Three comparator modes:
  - Simple address/data comparator match mode
  - Inside address range mode, Addmin ≤ Address ≤ Addmax
  - Outside address range match mode, Address < Addmin or Address > Addmax
- Two types of triggers:
  - Tagged: triggers just before a specific instruction begins execution
  - Force: triggers on the first instruction boundary after a match occurs.
- Three types of breakpoints:
  - CPU breakpoint entering BDM on breakpoint (BDM)
  - CPU breakpoint executing SWI on breakpoint (SWI)
  - XGATE breakpoint
- Three trigger modes independent of comparators:
  - External instruction tagging (associated with CPU instructions only)
  - XGATE S/W breakpoint request
  - TRIG bit immediate software trigger
- Three trace modes:
  - Normal: change of flow (COF) bus information is stored (see Section 19.4.5.2.1, “Normal Mode”) for change of flow definition.
  - Loop1: same as normal but inhibits consecutive duplicate source address entries
  - Detail: address and data for all cycles except free cycles and opcode fetches are stored
- 4-stage state sequencer for trace buffer control:
  - Tracing session trigger linked to final state of state sequencer
  - Begin, end, and mid alignment of tracing to trigger

19.1.3 Modes of Operation

The DBG module can be used in all MCU functional modes.

During BDM hardware accesses and when the BDM module is active, CPU monitoring is disabled. Thus breakpoints, comparators and bus tracing mapped to the CPU are disabled but accessing the DBG registers, including comparator registers, is still possible. While in active BDM or during hardware BDM accesses,

XGATE activity can still be compared, traced and can be used to generate a breakpoint to the XGATE module. When the CPU enters active BDM mode through a BACKGROUND command, with the DBG module armed, the DBG remains armed.

The DBG module tracing is disabled if the MCU is secure. Breakpoints can however still be generated if the MCU is secure.

Table 19-1. Mode Dependent Restriction Summary

BDM Enable	BDM Active	MCU Secure	Comparator Matches Enabled	Breakpoints Possible	Tagging Possible	Tracing Possible
x	x	1	Yes	Yes	Yes	No
0	0	0	Yes	Only SWI	Yes	Yes
0	1	0	Active BDM not possible when not enabled			
1	0	0	Yes	Yes	Yes	Yes
1	1	0	XGATE only	XGATE only	XGATE only	XGATE only

19.1.4 Block Diagram

Figure 19-1 shows a block diagram of the debug module.

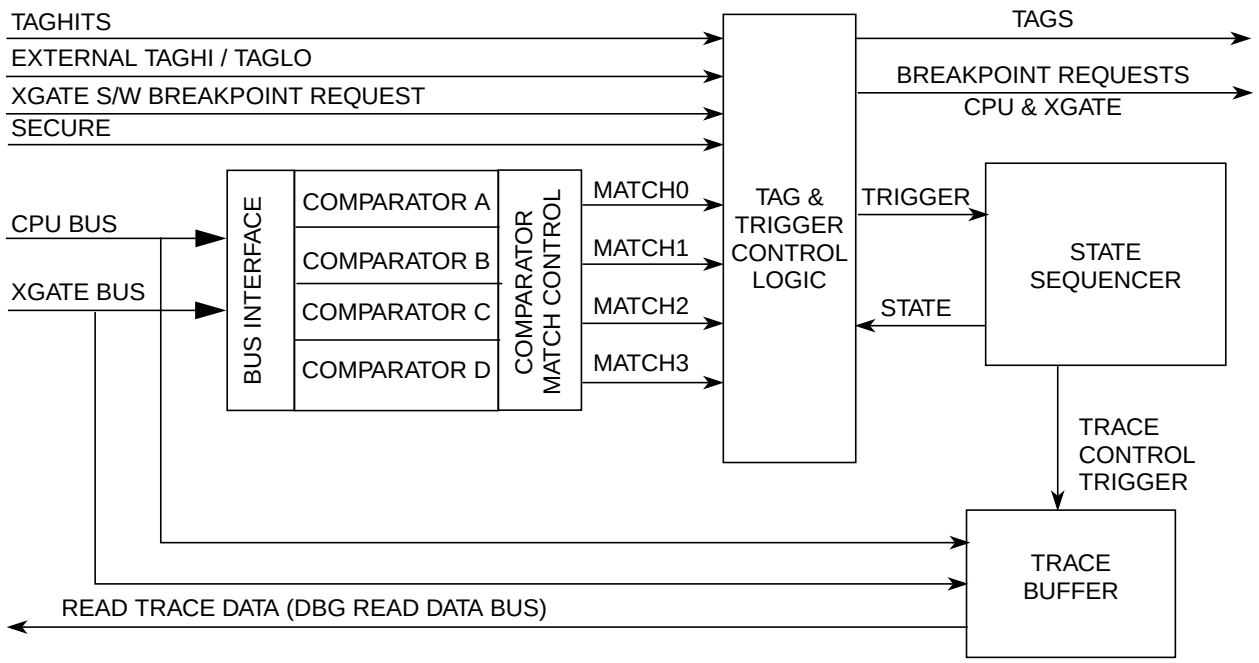

Figure 19-1. Debug Block Diagram

19.2 External Signal Description

The DBG sub-module features two external tag input signals (see Table 19-2). See Device User Guide (DUG) for the mapping of these signals to device pins. These tag pins may be used for the external tagging in emulation modes only

Table 19-2. External System Pins Associated With DBG

Pin Name	Pin Functions	Description
$\overline{\text{TAGHI}}$ (See DUG)	$\overline{\text{TAGHI}}$	When instruction tagging is on, tags the high half of the instruction word being read into the instruction queue.
$\overline{\text{TAGLO}}$ (See DUG)	$\overline{\text{TAGLO}}$	When instruction tagging is on, tags the low half of the instruction word being read into the instruction queue.

19.3 Memory Map and Register Definition

A summary of the registers associated with the DBG sub-block is shown in Figure 19-2. Detailed descriptions of the registers and bits are given in the subsections that follow.

19.3.1 Register Descriptions

This section consists of the DBG control and trace buffer register descriptions in address order. Each comparator has a bank of registers that are visible through an 8-byte window between 0x0028 and 0x002F in the DBG module register address map. When ARM is set in DBGC1, the only bits in the DBG module registers that can be written are ARM, TRIG and COMRV[1:0]

Address	Register Name		Bit 7	6	5	4	3	2	1	Bit 0
0x0020	DBGC1	R	ARM	0	XGSBPE	BDM	DBGBRK		COMRV	
		W		TRIG						
0x0021	DBGSR	R	TBF	EXTF	0	0	0	SSF2	SSF1	SSF0
		W								
0x0022	DBGTCR	R	TSOURCE		TRANGE		TRCMOD		TALIGN	
		W								
0x0023	DBGC2	R	0	0	0	0	CDCM		ABCM	
		W								
0x0024	DBGTBH	R	Bit 15	14	13	12	11	10	9	Bit 8
		W								
0x0025	DBGTBL	R	Bit 7	6	5	4	3	2	1	Bit 0
		W								
0x0026	DBGCNT	R	0	CNT						
		W								
0x0027	DBGSCRX	R	0	0	0	0	SC3	SC2	SC1	SC0
		W								
0x0028	DBGXCTL[1] (COMPA/C)	R	0	NDB	TAG	BRK	RW	RWE	SRC	COMPE
		W								
0x0028	DBGXCTL[2] (COMPB/D)	R	SZE	SZ	TAG	BRK	RW	RWE	SRC	COMPE
		W								

1. This represents the contents if the comparator A or C control register is blended into this address
2. This represents the contents if the comparator B or D control register is blended into this address

= Unimplemented or Reserved

Figure 19-2. DBG Register Summary

Address	Register Name		Bit 7	6	5	4	3	2	1	Bit 0
0x0029	DBGXAH	R	0	Bit 22	21	20	19	18	17	Bit 16
		W								
0x002A	DBGXAM	R/W	Bit 15	14	13	12	11	10	9	Bit 8
0x002B	DBGXAL	R/W	Bit 7	6	5	4	3	2	1	Bit 0
0x002C	DBGXDH	R/W	Bit 15	14	13	12	11	10	9	Bit 8
0x002D	DBGXDL	R/W	Bit 7	6	5	4	3	2	1	Bit 0
0x002E	DBGXDHM	R/W	Bit 15	14	13	12	11	10	9	Bit 8
0x002F	DBGXDLM	R/W	Bit 7	6	5	4	3	2	1	Bit 0

= Unimplemented or Reserved

Figure 19-2. DBG Register Summary (continued)

19.3.1.1 Debug Control Register 1 (DBGC1)

0x0020

	7	6	5	4	3	2	1	0
R	ARM	0	XGSBPE	BDM	DBGBRK		COMRV	
W		TRIG						
Reset	0	0	0	0	0	0	0	0

Figure 19-3. Debug Control Register (DBGC1)

Read: Anytime

Write: Bits 7,1,0 anytime, Bit 6 can be written anytime but always reads back as 0.
Bits 5:2 anytime DBG is not armed.

NOTE

When disarming the DBG by clearing ARM with software, the contents of bits[5:2] are not affected by the write, since up until the write operation, ARM=1 preventing these bits from being written. These bits must be cleared using a second write if required.

Table 19-3. DBGC1 Field Descriptions

Field	Description
7 ARM	**Arm Bit** — The ARM bit controls whether the DBG module is armed. This bit can be set and cleared by user software and is automatically cleared on completion of a tracing session, or if a breakpoint is generated with tracing not enabled. On setting this bit the state sequencer enters State1. When ARM is set, the only bits in the DBG module registers that can be written are ARM and TRIG. 0 Debugger disarmed 1 Debugger armed
6 TRIG	**Immediate Trigger Request Bit** — This bit when written to 1 requests an immediate trigger independent of comparator or external tag signal status. When tracing is complete a forced breakpoint may be generated depending upon DBGBRK and BDM bit settings. This bit always reads back a “0”. Writing a “0” to this bit has no effect. If both TSOURCE bits are clear no tracing is carried out. If tracing has already commenced using BEGIN- or mid-trigger alignment, it continues until the end of the tracing session as defined by the TALIGN bit settings, thus TRIG has no affect. In secure mode tracing is disabled and writing to this bit has no effect. 0 Do not trigger until the state sequencer enters the final state. 1 Enter final state immediately and issue forced breakpoint request when trace buffer is full.
5 XGSBPE	**XGATE S/W Breakpoint Enable** — The XGSBPE bit controls whether an XGATE S/W breakpoint request is passed to the CPU. The XGATE S/W breakpoint request is handled by the DBG module, which can request an CPU breakpoint depending on the state of this bit. 0 XGATE S/W breakpoint request is disabled 1 XGATE S/W breakpoint request is enabled
4 BDM	**Background Debug Mode Enable** — This bit determines if a CPU breakpoint causes the system to enter background debug mode (BDM) or initiate a software interrupt (SWI). It has no affect on DBG functionality. This bit must be set if the BDM is enabled by the ENBDM bit in the BDM module to map breakpoints to BDM and must be cleared if the BDM module is disabled to map breakpoints to SWI. 0 Go to software interrupt on a breakpoint 1 Go to BDM on a breakpoint.
3–2 DBGBRK	**DBG Breakpoint Enable Bits** — The DBGBRK bits control whether the debugger will request a breakpoint to either CPU, XGATE or both upon reaching the state sequencer final state. If tracing is enabled, the breakpoint is generated on completion of the tracing session. If tracing is not enabled, the breakpoint is generated immediately. Please refer to Section 19.4.7, “Breakpoints” for further details. XGATE generated breakpoints are independent of the DBGBRK bits. XGATE generates a forced breakpoint to the CPU only. See Table 19-4.
1–0 COMRV	**Comparator Register Visibility Bits** — These bits determine which bank of comparator register is visible in the 8-byte window of the DBG module address map, located between 0x0028 to 0x002F. Furthermore these bits determine which state control register is visible at the address 0x0027. See Table 19-5.

Table 19-4. DBGBRK Encoding

DBGBRK	Resource Halted by Breakpoint
00	No breakpoint generated
01	XGATE breakpoint generated
10	CPU breakpoint generated
11	Breakpoints generated for CPU and XGATE

Table 19-5. COMRV Encoding

COMRV	Visible Comparator	Visible State Control Register
00	Comparator A	DBGSCR1

Table 19-5. COMRV Encoding

COMRV	Visible Comparator	Visible State Control Register
01	Comparator B	DBGSCR2
10	Comparator C	DBGSCR3
11	Comparator D	DBGSCR3

19.3.1.2 Debug Status Register (DBGSR)

0x0021

	7	6	5	4	3	2	1	0
R	TBF	EXTF	0	0	0	SSF2	SSF1	SSF0
W								
Reset	—	0	0	0	0	0	0	0
POR	0	0	0	0	0	0	0	0

Unimplemented or Reserved

Figure 19-4. Debug Status Register (DBGSR)

Read: Anytime

Write: Never

Table 19-6. DBGSR Field Descriptions

Field	Description
7 TBF	**Trace Buffer Full** — The TBF bit indicates that the trace buffer has stored 64 or more lines of data since it was last armed. If this bit is set, then all 64 lines will be valid data, regardless of the value of DBGCNT bits CNT[6:0]. The TBF bit is cleared when ARM in DBGC1 is written to a 1. The TBF is cleared by the power on reset initialization. Other system generated resets have no affect on this bit
6 EXTF	**External Tag Hit Flag** — The EXTF bit indicates if a tag hit condition from an external $\overline{\text{TAGHI}}$/$\overline{\text{TAGLO}}$ tag was met since arming. This bit is cleared when ARM in DBGC1 is written to a 1. 0 External tag hit has not occurred 1 External tag hit has occurred
2–0 SSF[2:0}	**State Sequencer Flag Bits** — The SSF bits indicate in which state the state sequencer is currently in. During a debug session on each transition to a new state these bits are updated. If the debug session is ended by software clearing the ARM bit, then these bits retain their value to reflect the last state of the state sequencer before disarming. If a debug session is ended by a breakpoint, then the state sequencer returns to state0 and these bits are cleared to indicate that state0 was entered during the session. On arming the module the state sequencer enters state1 and these bits are forced to SSF[2:0] = 001. See Table 19-7.

Table 19-7. SSF[2:0] — State Sequence Flag Bit Encoding

SSF[2:0]	Current State
000	State0 (disarmed)
001	State1
010	State2
011	State3
100	Final State
101,110,111	Reserved

19.3.1.3 Debug Trace Control Register (DBGTCR)

0x0022

	7	6	5	4	3	2	1	0
R W	TSOURCE		TRANGE		TRCMOD		TALIGN	
Reset	0	0	0	0	0	0	0	0

Figure 19-5. Debug Trace Control Register (DBGTCR)

Read: Anytime

Write: Bits 7:6 only when DBG is neither secure nor armed.
Bits 5:0 anytime the module is disarmed.

Table 19-8. DBGTCR Field Descriptions

Field	Description
7–6 TSOURCE	**Trace Source Control Bits** — The TSOURCE bits select the data source for the tracing session. If the MCU system is secured, these bits cannot be set and tracing is inhibited. See Table 19-9.
5–4 TRANGE[5:4]	**Trace Range Bits** —The TRANGE bits allow filtering of trace information from a selected address range when tracing from the CPU in detail mode. The XGATE tracing range cannot be narrowed using these bits. To use a comparator for range filtering, the corresponding COMPE and SRC bits must remain cleared. If the COMPE bit is not clear then the comparator will also be used to generate state sequence triggers or tags. If the SRC bit is set the comparator is mapped to the XGATE busses, corrupting the trace. See Table 19-10.
3–2 TRCMOD[3:2]	**Trace Mode Bits** — See Section 19.4.5.2, “Trace Modes“ for detailed trace mode descriptions. In normal mode, change of flow information is stored. In loop1 mode, change of flow information is stored but redundant entries into trace memory are inhibited. In detail mode, address and data for all memory and register accesses is stored. See Table 19-11
1–0 TALIGN[1:0]	**Trigger Align Bits** — These bits control whether the trigger is aligned to the beginning, end or the middle of a tracing session. See Table 19-12.

Table 19-9. TSOURCE Trace Source Bit Encoding

TSOURCE	Tracing Source
00	No tracing requested
01	CPU
10[1]	XGATE
11[1, 2]	Both CPU and XGATE

[1] No range limitations are allowed. Thus tracing operates as if TRANGE = 00.
[2] No detail mode tracing supported. If TRCMOD =10, no information is stored.

Table 19-10. TRANGE Trace Range Encoding

TRANGE	Tracing Source
00	Trace from all addresses (No filter)
01	Trace only in address range from 0x0000 to comparator D
10	Trace only in address range from comparator C to 0x7FFFFF

Table 19-10. TRANGE Trace Range Encoding

TRANGE	Tracing Source
11	Trace only in range from comparator C to comparator D

Table 19-11. TRCMOD Trace Mode Bit Encoding

TRCMOD	Description
00	NORMAL
01	LOOP1
10	DETAIL
11	Reserved

Table 19-12. TALIGN Trace Alignment Encoding

TALIGN	Description
00	Trigger at end of stored data
01	Trigger before storing data
10	Trace buffer entries before and after trigger
11	Reserved

19.3.1.4 Debug Control Register2 (DBGC2)

0x0023

	7	6	5	4	3	2	1	0
R	0	0	0	0	CDCM		ABCM	
W								
Reset	0	0	0	0	0	0	0	0

Unimplemented or Reserved

Figure 19-6. Debug Control Register2 (DBGC2)

Read: Anytime

Write: Anytime the module is disarmed.

This register configures the comparators for range matching.

Table 19-13. DBGC2 Field Descriptions

Field	Description
3–2 CDCM[3:2]	**C and D Comparator Match Control** — These bits determine the C and D comparator match mapping as described in Table 19-14.
1–0 ABCM[1:0]	**A and B Comparator Match Control** — These bits determine the A and B comparator match mapping as described in Table 19-15.

Table 19-14. CDCM Encoding

CDCM	Description
00	Match2 mapped to comparator C match..... Match3 mapped to comparator D match.
01	Match2 mapped to comparator C/D inside range..... Match3 disabled.
10	Match2 mapped to comparator C/D outside range..... Match3 disabled.
11	Reserved

Table 19-15. ABCM Encoding

ABCM	Description
00	Match0 mapped to comparator A match..... Match1 mapped to comparator B match.
01	Match 0 mapped to comparator A/B inside range..... Match1 disabled.
10	Match 0 mapped to comparator A/B outside range..... Match1 disabled.
11	Reserved

19.3.1.5 Debug Trace Buffer Register (DBGTBH:DBGTBL)

0x0024

	15	14	13	12	11	10	9	8
R W	Bit 15	14	13	12	11	10	9	Bit 8
Reset	X	X	X	X	X	X	X	X

Figure 19-7. Debug Trace Buffer Register (DBGTBH)

0x0025

	7	6	5	4	3	2	1	0
R W	Bit 7	6	5	4	3	2	1	Bit 0
Reset	X	X	X	X	X	X	X	X

Figure 19-8. Debug Trace Buffer Register (DBGTBL)

Read: Anytime when unlocked and not secured and not armed.

Write: Aligned word writes when disarmed unlock the trace buffer for reading but do not affect trace buffer contents

Table 19-16. DBGTB Field Descriptions

Field	Description
15–0 Bit[15:0]	**Trace Buffer Data Bits** — The trace buffer register is a window through which the 64-bit wide data lines of the trace buffer may be read 16 bits at a time. Each valid read of DBGTB increments an internal trace buffer pointer which points to the next address to be read. When the ARM bit is written to 1 the trace buffer is locked to prevent reading. The trace buffer can only be unlocked for reading by writing to DBGTB with an aligned word write when the module is disarmed. The DBGTB register can be read only as an aligned word, any byte reads or misaligned access of these registers will return 0 and will not cause the trace buffer pointer to increment to the next trace buffer address. The same is true for word reads while the debugger is armed. System resets do not affect the trace buffer contents. The POR state is undefined.

19.3.1.6 Debug Count Register (DBGCNT)

0x0026

	7	6	5	4	3	2	1	0
R	0	CNT						
W								
Reset	0	—	—	—	—	—	—	—
POR	0	0	0	0	0	0	0	0

Unimplemented or Reserved

Figure 19-9. Debug Count Register (DBGCNT)

Read: Anytime

Write: Never

Table 19-17. DBGCNT Field Descriptions

Field	Description
6–0 CNT[6:0]	**Count Value** — The CNT bits [6:0] indicate the number of valid data 64-bit data lines stored in the trace buffer. Table 19-18 shows the correlation between the CNT bits and the number of valid data lines in the trace buffer. When the CNT rolls over to 0, the TBF bit in DBGSR is set and incrementing of CNT will continue in end-trigger or mid-trigger mode. The DBGCNT register is cleared when ARM in DBGC1 is written to a 1. The DBGCNT register is cleared by power-on-reset initialization but is not cleared by other system resets. Thus should a reset occur during a debug session, the DBGCNT register still indicates after the reset, the number of valid trace buffer entries stored before the reset occurred. The DBGCNT register is not decremented when reading from the trace buffer.

Table 19-18. CNT Decoding Table

TBF (DBGSR)	CNT[6:0]	Description
0	0000000	No data valid
0	0000001	32 bits of one line valid[1]
0	0000010	1 line valid
0	0000011 0000100 0000110 .. 1111100	1.5 lines valid[1] 2 lines valid 3 lines valid .. 62 lines valid
0	1111110	63 lines valid
1	0000000	64 lines valid; if using begin-trigger alignment, ARM bit will be cleared and the tracing session ends.
1	0000010 1111110	64 lines valid, oldest data has been overwritten by most recent data

[1] This applies to normal/loop1 modes when tracing from either CPU or XGATE only.

19.3.1.7 Debug State Control Registers

Each of the state sequencer states 1 to 3 features a dedicated control register to determine if transitions from that state are allowed depending upon comparator matches or tag hits and to define the next state for the state sequencer following a match. The 3 debug state control registers are located at the same address in the register address map (0x0027). Each register can be accessed using the COMRV bits in DBGC1 to blend in the required register (see Table 19-19).

Table 19-19. State Control Register Access Encoding

COMRV	Visible State Control Register
00	DBGSCR1
01	DBGSCR2
10	DBGSCR3
11	DBGSCR3

19.3.1.8 Debug State Control Register 1 (DBGSCR1)

0x0027

	7	6	5	4	3	2	1	0
R	0	0	0	0	SC3	SC2	SC1	SC0
W								
Reset	0	0	0	0	0	0	0	0

Unimplemented or Reserved

Figure 19-10. Debug State Control Register 1 (DBGSCR1)

Read: Anytime

Write: Anytime when DBG not armed.

This register is visible at 0x0027 only with COMRV[1:0] = 00. The state control register 1 selects the targeted next state while in State1. The matches refer to the match channels of the comparator match control logic as depicted in Figure 19-1 and described in Section 19.3.1.11.1, “Debug Comparator Control Register (DBGXCTL)”. Comparators must be enabled by setting the comparator enable bit in the associated DBGXCTL control register.

Table 19-20. DBGSCR1 Field Descriptions

Field	Description
3–0 SC[3:0}	**State Control Bits** — These bits select the targeted next state while in State1, based upon the match event. See Table 19-21. The trigger priorities described in Table 19-38 dictate that in the case of simultaneous matches, the match on the lower channel number ([0,1,2,3) has priority. The SC[3:0] encoding ensures that a match leading to final state has priority over all other matches.

Table 19-21. State1 Sequencer Next Sate Selection

SC[3:0]	Description
0000	Any match triggers to state2
0001	Any match triggers to state3
0010	Any match triggers to final state
0011	Match2 triggers to State2..... Other matches have no effect
0100	Match2 triggers to State3..... Other matches have no effect
0101	Match2 triggers to final state..... Other matches have no effect
0110	Match0 triggers to State2..... Match1 triggers to State3..... Other matches have no effect
0111	Match1 triggers to State3..... Match0 triggers final state..... Other matches have no effect
1000	Match0 triggers to State2..... Match2 triggers to State3..... Other matches have no effect
1001	Match2 triggers to State3..... Match0 triggers final state..... Other matches have no effect
1010	Match1 triggers to State2..... Match3 triggers to State3..... Other matches have no effect
1011	Match3 triggers to State3..... Match1 triggers to final state..... Other matches have no effect
1100	Reserved
1101	Reserved
1110	Reserved
1111	Reserved

19.3.1.9 Debug State Control Register 2 (DBGSCR2)

0x0027

	7	6	5	4	3	2	1	0
R	0	0	0	0	SC3	SC2	SC1	SC0
W								
Reset	0	0	0	0	0	0	0	0

Unimplemented or Reserved

Figure 19-11. Debug State Control Register 2 (DBGSCR2)

Read: Anytime

Write: Anytime when DBG not armed.

This register is visible at 0x0027 only with COMRV[1:0] = 01. The state control register 2 selects the targeted next state while in State2. The matches refer to the match channels of the comparator match control logic as depicted in Figure 19-1 and described in Section 19.3.1.11.1, “Debug Comparator Control Register (DBGXCTL)”. Comparators must be enabled by setting the comparator enable bit in the associated DBGXCTL control register.

Table 19-22. DBGSCR2 Field Descriptions

Field	Description
3–0 SC[3:0}	**State Control Bits** — These bits select the targeted next state while in State2, based upon the match event. See Table 19-23. The trigger priorities described in Table 19-38 dictate that in the case of simultaneous matches, the match on the lower channel number ([0,1,2,3) has priority. The SC[3:0] encoding ensures that a match leading to final state has priority over all other matches.

Table 19-23. State2 Sequencer Next State Selection

SC[3:0]	Description
0000	Any match triggers to state1
0001	Any match triggers to state3
0010	Any match triggers to final state
0011	Match3 triggers to State1..... Other matches have no effect
0100	Match3 triggers to State3..... Other matches have no effect
0101	Match3 triggers to final state..... Other matches have no effect
0110	Match0 triggers to State1..... Match1 triggers to State3..... Other matches have no effect
0111	Match1 triggers to State3..... Match0 triggers final state..... Other matches have no effect
1000	Match0 triggers to State1..... Match2 triggers to State3..... Other matches have no effect
1001	Match2 triggers to State3..... Match0 triggers final state..... Other matches have no effect
1010	Match1 triggers to State1..... Match3 triggers to State3..... Other matches have no effect
1011	Match3 triggers to State3..... Match1 triggers final state..... Other matches have no effect
1100	Reserved
1101	Reserved
1110	Reserved
1111	Reserved

19.3.1.10 Debug State Control Register 3 (DBGSCR3)

0x0027

	7	6	5	4	3	2	1	0
R	0	0	0	0	SC3	SC2	SC1	SC0
W								
Reset	0	0	0	0	0	0	0	0

Unimplemented or Reserved

Figure 19-12. Debug State Control Register 3 (DBGSCR3)

Read: Anytime

Write: Anytime when DBG not armed.

This register is visible at 0x0027 only with COMRV[1]=1. The state control register 3 selects the targeted next state while in State3. The matches refer to the match channels of the comparator match control logic as depicted in Figure 19-1 and described in Section 19.3.1.11.1, “Debug Comparator Control Register

(DBGXCTL)". Comparators must be enabled by setting the comparator enable bit in the associated DBGXCTL control register.

Table 19-24. DBGSCR3 Field Descriptions

Field	Description
3–0 SC[3:0]	**State Control Bits** — These bits select the targeted next state while in State3, based upon the match event. The trigger priorities described in Table 19-38 dictate that in the case of simultaneous matches, the match on the lower channel number (0,1,2,3) has priority. The SC[3:0] encoding ensures that a match leading to final state has priority over all other matches.

Table 19-25. State3 Sequencer Next State Selection

SC[3:0]	Description
0000	Any match triggers to state1
0001	Any match triggers to state2
0010	Any match triggers to final state
0011	Match0 triggers to State1..... Other matches have no effect
0100	Match0 triggers to State2..... Other matches have no effect
0101	Match0 triggers to final state..... Other matches have no effect
0110	Match1 triggers to State1..... Other matches have no effect
0111	Match1 triggers to State2..... Other matches have no effect
1000	Match1 triggers to final state..... Other matches have no effect
1001	Match2 triggers to State2..... Match0 triggers to final state..... Other matches have no effect
1010	Match1 triggers to State1..... Match3 triggers to State2..... Other matches have no effect
1011	Match3 triggers to State2..... Match1 triggers to final state..... Other matches have no effect
1100	Match2 triggers to final state..... Other matches have no effect
1101	Match3 triggers to final state..... Other matches have no effect
1110	Reserved
1111	Reserved

19.3.1.11 Comparator Register Descriptions

Each comparator has a bank of registers that are visible through an 8-byte window in the DBG module register address map. Comparators A and C consist of 8 register bytes (3 address bus compare registers, 2 data bus compare registers, 2 data bus mask registers and a control register).

Comparators B and D consist of 4 register bytes (3 address bus compare registers and a control register).

Each set of comparator registers is accessible in the same 8-byte window of the register address map and can be accessed using the COMRV bits in the DBGC1 register. If the Comparators B or D are accessed through the 8-byte window, then only the address and control bytes are visible, the 4 bytes associated with data bus and data bus masking read as 0 and cannot be written. Furthermore the control registers for comparators B and D differ from those of comparators A and C.

Table 19-26. Comparator Register Layout

0x0028	CONTROL	Read/Write	

Table 19-26. Comparator Register Layout

0x0029	ADDRESS HIGH	Read/Write	
0x002A	ADDRESS MEDIUM	Read/Write	
0x002B	ADDRESS LOW	Read/Write	
0x002C	DATA HIGH COMPARATOR	Read/Write	Comparator A and C only
0x002D	DATA LOW COMPARATOR	Read/Write	Comparator A and C only
0x002E	DATA HIGH MASK	Read/Write	Comparator A and C only
0x002F	DATA LOW MASK	Read/Write	Comparator A and C only

19.3.1.11.1 Debug Comparator Control Register (DBGXCTL)

The contents of this register bits 7 and 6 differ depending upon which comparator registers are visible in the 8-byte window of the DBG module register address map

0x0028

	7	6	5	4	3	2	1	0
R	0	NDB	TAG	BRK	RW	RWE	SRC	COMPE
W								
Reset	0	0	0	0	0	0	0	0

Unimplemented or Reserved

Figure 19-13. Debug Comparator Control Register (Comparators A and C)

0x0028

	7	6	5	4	3	2	1	0
R	SZE	SZ	TAG	BRK	RW	RWE	SRC	COMPE
W								
Reset	0	0	0	0	0	0	0	0

Figure 19-14. Debug Comparator Control Register (Comparators B and D)

Read: Anytime

Write: Anytime when DBG not armed.

Table 19-27. DBGXCTL Field Descriptions

Field	Description
7 (COMPB/D) SZE	**Size Comparator Enable Bit** — The SZE bit controls whether access size comparison is enabled for the associated comparator. This bit is ignored if the TAG bit in the same register is set. 0 Word/Byte access size is not used in comparison 1 Word/Byte access size is used in comparison
6 (COMPA/C) NDB	**Not Data Bus Compare** — The NDB bit controls whether the match occurs when the data bus matches the comparator register value or when the data bus differs from the register value. Furthermore database bits can be individually masked using the comparator data mask registers. This bit is only available for comparators A and C. This bit is ignored if the TAG bit in the same register is set. This bit position has an SZ functionality for comparators B and D. 0 Match on data bus equivalence to comparator register contents 1 Match on data bus difference to comparator register contents

Table 19-27. DBGXCTL Field Descriptions (continued)

Field	Description
6 (COMP B/D) SZ	**Size Comparator Value Bit** — The SZ bit selects either word or byte access size in comparison for the associated comparator. This bit is ignored if the SZE bit is cleared or if the TAG bit in the same register is set. This bit position has NDB functionality for comparators A and C 0 Word access size will be compared 1 Byte access size will be compared
5 TAG	**Tag Select** — This bit controls whether the comparator match will cause a trigger or tag the opcode at the matched address. Tagged opcodes trigger only if they reach the execution stage of the instruction queue. 0 Trigger immediately on match 1 On match, tag the opcode. If the opcode is about to be executed a trigger is generated
4 BRK	**Break** — This bit controls whether a comparator match can cause an immediate breakpoint independent of state sequencer state. The module breakpoints must be enabled using the DBGC1 bits DBGBRK[1:0]. 0 Breakpoints may only be generated from this channel when the state machine reaches final state. 1 A match on this channel generates an immediate breakpoint, tracing, if active, is terminated and the module disarmed.
3 RW	**Read/Write Comparator Value Bit** — The RW bit controls whether read or write is used in compare for the associated comparator. The RW bit is not used if RWE = 0. 0 Write cycle will be matched 1 Read cycle will be matched
2 RWE	**Read/Write Enable Bit** — The RWE bit controls whether read or write comparison is enabled for the associated comparator. This bit is not useful for tagged operations. 1 Read/Write is used in comparison 0 Read/Write is not used in comparison
1 SRC	**SRC** — Determines mapping of comparator to CPU or XGATE 0 The comparator is mapped to CPU busses 1 The comparator is mapped to XGATE address and data busses
0 COMPE	**Comparator Enable Bit**— Determines if comparator is enabled 0 The comparator is not enabled 1 The comparator is enabled for state sequence triggers or tag generation

Table 19-28 shows the effect for RWE and RW on the comparison conditions. These bits are not useful for tagged operations since the trigger occurs based on the tagged opcode reaching the execution stage of the instruction queue. Thus, these bits are ignored if tagged triggering is selected.

Table 19-28. Read or Write Comparison Logic Table

RWE Bit	RW Bit	RW Signal	Comment
0	x	0	RW not used in comparison
0	x	1	RW not used in comparison
1	0	0	Write data bus
1	0	1	No match
1	1	0	No match
1	1	1	Read data bus

19.3.1.11.2 Debug Comparator Address High Register (DBGXAH)

0x0029

	7	6	5	4	3	2	1	0
R	0	Bit 22	21	20	19	18	17	Bit 16
W								
Reset	0	0	0	0	0	0	0	0

Unimplemented or Reserved

Figure 19-15. Debug Comparator Address High Register (DBGXAH)

Read: Anytime

Write: Anytime when DBG not armed.

Table 19-29. DBGXAH Field Descriptions

Field	Description
6–0 Bits [22:16]	**Comparator Address High Compare Bits** — The comparator address high compare bits control whether the selected comparator will compare the address bus bits [22:16] to a logic 1 or logic 0. This register byte is ignored for XGATE compares. 0 Compare corresponding address bit to a logic 0 1 Compare corresponding address bit to a logic 1

19.3.1.11.3 Debug Comparator Address Mid Register (DBGXAM)

0x002A

	7	6	5	4	3	2	1	0
R W	Bit 15	14	13	12	11	10	9	Bit 8
Reset	0	0	0	0	0	0	0	0

Figure 19-16. Debug Comparator Address Mid Register (DBGXAM)

Read: Anytime

Write: Anytime when DBG not armed.

Table 19-30. DBGXAM Field Descriptions

Field	Description
7–0 Bits [15:8]	**Comparator Address Mid Compare Bits** — The comparator address mid compare bits control whether the selected comparator will compare the address bus bits [15:8] to a logic 1 or logic 0. 0 Compare corresponding address bit to a logic 0 1 Compare corresponding address bit to a logic 1

19.3.1.11.4 Debug Comparator Address Low Register (DBGXAL)

0x002B

	7	6	5	4	3	2	1	0
R W	Bit 7	6	5	4	3	2	1	Bit 0
Reset	0	0	0	0	0	0	0	0

Figure 19-17. Debug Comparator Address Low Register (DBGXAL)

Read: Anytime

Write: Anytime when DBG not armed.

Table 19-31. DBGXAL Field Descriptions

Field	Description
7–0 Bits [7:0]	**Comparator Address Low Compare Bits** — The comparator address low compare bits control whether the selected comparator will compare the address bus bits [7:0] to a logic 1 or logic 0. 0 Compare corresponding address bit to a logic 0 1 Compare corresponding address bit to a logic 1

19.3.1.11.5 Debug Comparator Data High Register (DBGXDH)

0x002C

	7	6	5	4	3	2	1	0
R W	Bit 15	14	13	12	11	10	9	Bit 8
Reset	0	0	0	0	0	0	0	0

Figure 19-18. Debug Comparator Data High Register (DBGXDH)

Read: Anytime

Write: Anytime when DBG not armed.

Table 19-32. DBGXDH Field Descriptions

Field	Description
7–0 Bits [15:8]	**Comparator Data High Compare Bits** — The comparator data high compare bits control whether the selected comparator compares the data bus bits [15:8] to a logic 1 or logic 0. The comparator data compare bits are only used in comparison if the corresponding data mask bit is logic 1. This register is available only for comparators A and C. 0 Compare corresponding data bit to a logic 0 1 Compare corresponding data bit to a logic 1

19.3.1.11.6 Debug Comparator Data Low Register (DBGXDL)

0x002D

	7	6	5	4	3	2	1	0
R W	Bit 7	6	5	4	3	2	1	Bit 0
Reset	0	0	0	0	0	0	0	0

Figure 19-19. Debug Comparator Data Low Register (DBGXDL)

Read: Anytime

Write: Anytime when DBG not armed.

Table 19-33. DBGXDL Field Descriptions

Field	Description
7–0 Bits [7:0]	**Comparator Data Low Compare Bits** — The comparator data low compare bits control whether the selected comparator compares the data bus bits [7:0] to a logic 1 or logic 0. The comparator data compare bits are only used in comparison if the corresponding data mask bit is logic 1. This register is available only for comparators A and C. 0 Compare corresponding data bit to a logic 0 1 Compare corresponding data bit to a logic 1

19.3.1.11.7 Debug Comparator Data High Mask Register (DBGXDHM)

0x002E

	7	6	5	4	3	2	1	0
R W	Bit 15	14	13	12	11	10	9	Bit 8
Reset	0	0	0	0	0	0	0	0

Figure 19-20. Debug Comparator Data High Mask Register (DBGXDHM)

Read: Anytime

Write: Anytime when DBG not armed.

Table 19-34. DBGXDHM Field Descriptions

Field	Description
7–0 Bits [15:8]	**Comparator Data High Mask Bits** — The comparator data high mask bits control whether the selected comparator compares the data bus bits [15:8] to the corresponding comparator data compare bits. This register is available only for comparators A and C. 0 Do not compare corresponding data bit 1 Compare corresponding data bit

19.3.1.11.8 Debug Comparator Data Low Mask Register (DBGXDLM)

0x002F

	7	6	5	4	3	2	1	0
R W	Bit 7	6	5	4	3	2	1	Bit 0
Reset	0	0	0	0	0	0	0	0

Figure 19-21. Debug Comparator Data Low Mask Register (DBGXDLM)

Read: Anytime

Write: Anytime when DBG not armed.

Table 19-35. DBGXDLM Field Descriptions

Field	Description
7–0 Bits [7:0]	**Comparator Data Low Mask Bits** — The comparator data low mask bits control whether the selected comparator compares the data bus bits [7:0] to the corresponding comparator data compare bits. This register is available only for comparators A and C. 0 Do not compare corresponding data bit 1 Compare corresponding data bit

19.4 Functional Description

This section provides a complete functional description of the DBG module. If the part is in secure mode, the DBG module can generate breakpoints but tracing is not possible.

19.4.1 DBG Operation

Arming the DBG module by setting ARM in DBGC1 allows triggering, and storing of data in the trace buffer and can be used to cause breakpoints to the CPU or the XGATE module. The DBG module is made up of 4 main blocks, the comparators, control logic, the state sequencer and the trace buffer.

The comparators monitor the bus activity of the CPU and XGATE modules. Comparators can be configured to monitor address and databus. Comparators can also be configured to mask out individual data bus bits during a compare and to use R/W and word/byte access qualification in the comparison. When a match with a comparator register value occurs the associated control logic can trigger the state sequencer to another state (Figure 19-23). Either forced or tagged triggers are possible. Using a forced trigger, the trigger is generated immediately on a comparator match. Using a tagged trigger, at a comparator match, the instruction opcode is tagged and only if the instruction reaches the execution stage of the instruction queue is a trigger generated. In the case of a transition to final state, bus tracing is triggered and/or a breakpoint can be generated. Tracing of both CPU and/or XGATE bus activity is possible.

Independent of the state sequencer, a breakpoint can be triggered by the external $\overline{\text{TAGHI}}$ / $\overline{\text{TAGLO}}$ signals, by an XGATE S/W breakpoint request or by writing to the TRIG bit in the DBGC1 control register.

The trace buffer is visible through a 2-byte window in the register address map and can be read out using standard 16-bit word reads.

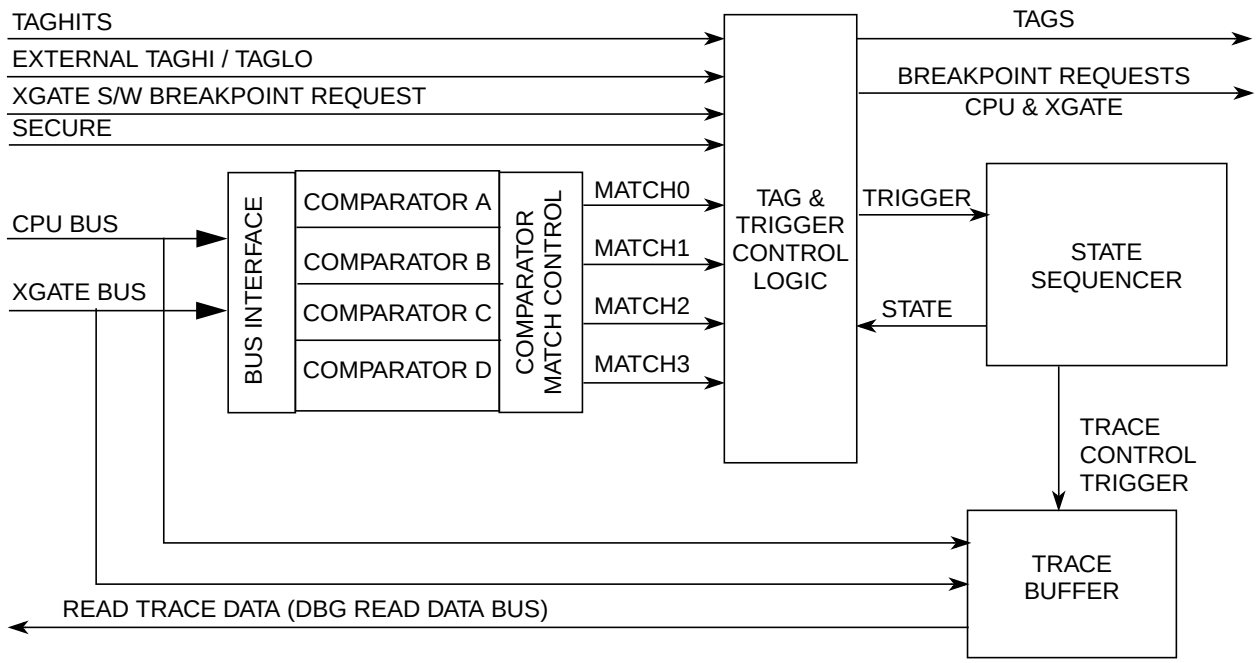

Figure 19-22. DBG Overview

19.4.2 Comparator Modes

The DBG contains 4 comparators, A, B, C, and D. Each comparator can be configured to monitor either CPU or XGATE busses using the SRC bit in the corresponding comparator control register. Each comparator compares the selected address bus with the address stored in DBGXAH, DBGXAM and DBGXAL. Furthermore comparators A and C also compare the data buses to the data stored in DBGXDH, DBGXDL and allow masking of individual data bus bits.

All comparators are disabled in BDM and during BDM accesses.

The comparator match control logic (see Figure 19-22) configures comparators to monitor the busses for an exact address or an address range, whereby either an access inside or outside the specified range generates a match condition. The comparator configuration is controlled by the control register contents and the range control by the DBGC2 contents.

On a match a trigger can initiate a transition to another state sequencer state (see Section 19.4.3, “Trigger Modes”). The comparator control register also allows the type of access to be included in the comparison through the use of the RWE,RW,SZE and SZ bits. The RWE bit controls whether read or write comparison is enabled for the associated comparator and the RW bit selects either a read or write access for a valid match. Similarly the SZE and SZ bits allows the size of access (word or byte) to be considered in the compare. Only comparators B and D feature SZE and SZ.

The TAG bit in each comparator control register is used to determine the triggering condition. By setting TAG, the comparator will qualify a match with the output of opcode tracking logic and a trigger occurs before the tagged instruction executes (tagged-type trigger). Whilst tagging the RW, RWE, SZE and SZ bits are ignored and the comparator register must be loaded with the exact opcode address.

If the TAG bit is clear (forced type trigger) a comparator match is generated when the selected address appears on the system address bus. If the selected address is an opcode address, the match is generated when the opcode is fetched from the memory. This precedes the instruction execution by an indefinite number of cycles due to instruction pipe lining. For a comparator match of an opcode at an odd address when TAG = 0, the corresponding even address must be contained in the comparator register. Thus for an opcode at odd address (n), the comparator register must contain address (n – 1).

Once a successful comparator match has occurred, the condition that caused the original match is not verified again on subsequent matches. Thus if a particular data value is verified at a given address, this address may not still contain that data value when a subsequent match occurs.

Comparators C and D can also be used to select an address range to trace from. This is determined by the TRANGE bits in the DBGTCR register. The TRANGE encoding is shown in Table 19-10. If the TRANGE bits select a range definition using comparator D, then comparator D is configured for trace range definition and cannot be used for address bus comparisons. Similarly if the TRANGE bits select a range definition using comparator C, then comparator C is configured for trace range definition and cannot be used for address bus comparisons.

Match[0,1,2,3] map directly to comparators [A,B,C,D] respectively, except in range modes (see Section 19.3.1.4, “Debug Control Register2 (DBGC2)”). Comparator priority rules are described in the trigger priority (see Section 19.4.3.6, “Trigger Priorities”).

19.4.2.1 Exact Address Comparator Match (Comparators A and C)

With range comparisons disabled, the match condition is an exact equivalence of address/data bus with the value stored in the comparator address/data registers. Further qualification of the type of access (R/W, word/byte) is possible.

Comparators A and C do not feature SZE or SZ control bits, thus the access size is not compared. The exact address is compared, thus with the comparator address register loaded with address (n) a misaligned word access of address (n-1) also accesses (n) but does not cause a match Table 19-37 lists access considerations without data bus compare. Table 19-36 lists access considerations with data bus comparison. To compare byte accesses DBGXDH must be loaded with the data byte. The low byte must be masked out using the DBGXDLM mask register. On word accesses data byte of the lower address is mapped to DBGXDH.

Table 19-36. Comparator A and C Data Bus Considerations

Access	Address	DBGxDH	DBGxDL	DBGxDHM	DBGxDLM	Example Valid Match
Word	ADDR[n]	Data[n]	Data[n+1]	0x_FF	0x_FF	MOVW #$WORD ADDR[n]
Byte	ADDR[n]	Data[n]	x	0x_FF	0x_00	MOVB #$BYTE ADDR[n]
Word	ADDR[n]	Data[n]	x	0x_FF	0x_00	MOVW #$WORD ADDR[n]
Word	ADDR[n]	x	Data[n+1]	0x_00	0x_FF	MOVW #$WORD ADDR[n]

Comparators A and C feature an NDB control bit to determine if a match occurs when the data bus differs to comparator register contents or when the data bus is equivalent to the comparator register contents.

19.4.2.2 Exact Address Comparator Match (Comparators B and D)

Comparators B and D feature SZ and SZE control bits. If SZE is clear, then the comparator address match qualification functions the same as for comparators A and C.

If the SZE bit is set the access size (word or byte) is compared with the SZ bit value such that only the specified type of access causes a match. Thus, if configured for a byte access of a particular address, a word access covering the same address does not lead to match.

Table 19-37. Comparator Access Size Considerations

Comparator	Address	SZE	SZ8	Condition For Valid Match
Comparators A and C	ADDR[n]	-	-	Word and byte accesses of ADDR[n][1] MOVB #$BYTE ADDR[n] MOVW #$WORD ADDR[n]
Comparators B and D	ADDR[n]	0	X	Word and byte accesses of ADDR[n][1] MOVB #$BYTE ADDR[n] MOVW #$WORD ADDR[n]
Comparators B and D	ADDR[n]	1	0	Word accesses of ADDR[n][1] MOVW #$WORD ADDR[n]
Comparators B and D	ADDR[n]	1	1	Byte accesses of ADDR[n] MOVB #$BYTE ADDR[n]

[1] A word access of ADDR[n-1] also accesses ADDR[n] but does not generate a match. The comparator address register must contain the exact address used in the code.

19.4.2.3 Range Comparisons

When using the AB comparator pair for a range comparison, the data bus can also be used for qualification by using the comparator A data and data mask registers. Furthermore the DBGACTL RW and RWE bits can be used to qualify the range comparison on either a read or a write access. The corresponding DBGBCTL bits are ignored. Similarly when using the CD comparator pair for a range comparison, the data bus can also be used for qualification by using the comparator C data and data mask registers. Furthermore the DBGCCTL RW and RWE bits can be used to qualify the range comparison on either a read or a write access if tagging is not selected. The corresponding DBGDCTL bits are ignored. The SZE and SZ control bits are ignored in range mode. The comparator A and C TAG bits are used to tag range comparisons for the AB and CD ranges respectively. The comparator B and D TAG bits are ignored in range modes. In order for a range comparison using comparators A and B, both COMPEA and COMPEB must be set; to disable range comparisons both must be cleared. Similarly for a range CD comparison, both COMPEC and COMPED must be set. If a range mode is selected SRCA and SRCB must select the same source (S12X or XGATE). Similarly SRCC and SRCD must select the same source. When configured for range comparisons and tagging, the ranges are accurate only to word boundaries.

19.4.2.3.1 Inside Range (CompAC_Addr ≤ Address ≤ CompBD_Addr)

In the inside range comparator mode, either comparator pair A and B or comparator pair C and D can be configured for range comparisons. This configuration depends upon the control register (DBGC2). The match condition requires that a valid match for both comparators happens on the same bus cycle. A match condition on only one comparator is not valid. An aligned word access which straddles the range boundary will cause a trigger only if the aligned address is inside the range.

19.4.2.3.2 Outside Range (Address < CompAC_Addr or Address > CompBD_Addr)

In the outside range comparator mode, either comparator pair A and B or comparator pair C and D can be configured for range comparisons. A single match condition on either of the comparators is recognized as valid. An aligned word access which straddles the range boundary will cause a trigger only if the aligned address is outside the range.

Outside range mode in combination with tagged triggers can be used to detect if the opcode fetches are from an unexpected range. In forced trigger modes the outside range trigger would typically be activated at any interrupt vector fetch or register access. This can be avoided by setting the upper range limit to 0x7FFFFF or lower range limit to 0x000000 respectively.

When comparing the XGATE address bus in outside range mode, the initial vector fetch as determined by the vector contained in the XGATE XGVBR register should be taken into consideration. The XGVBR register and hence vector address can be modified.

19.4.3 Trigger Modes

Trigger modes are used as qualifiers for a state sequencer change of state. The control logic determines the trigger mode and provides a trigger to the state sequencer. The individual trigger modes are described in the following sections.

19.4.3.1 Trigger On Comparator Match

If a comparator match occurs, a trigger occurs to initiate a transition to another state sequencer state and the corresponding flags in DBGSR are set. For a comparator match to trigger firstly the comparator must be enabled by setting the COMPE bit in the corresponding comparator control register. Secondly the state control register for the current state must enable the match for that state. The state control registers allow for different matches to be enabled in each of the states 1 to 3.

19.4.3.2 Trigger On Comparator Related Taghit

If either a CPU or XGATE taghit occurs a transition to another state sequencer state is initiated and the corresponding DBGSR flags are set. For a comparator related taghit to occur, the DBG must first generate tags based on comparator matches. When the tagged instruction reaches the execution stage of the instruction queue a taghit is generated by the CPU/XGATE.

19.4.3.3 External Tag Trigger

In external tagging trigger mode, the $\overline{\text{TAGLO}}$ and $\overline{\text{TAGHI}}$ pins (mapped to device pins) are used to tag an instruction. This function can be used as another breakpoint source. When the tagged opcode reaches the execution stage of the instruction queue a transition to the disarmed state0 occurs, ending the debug session and generating a breakpoint, if breakpoints are enabled. External tagging is only possible in device emulation modes.

19.4.3.4 Trigger On XGATE S/W Breakpoint Request

The XGATE S/W breakpoint request issues a forced breakpoint request to the CPU immediately independent of DBG settings. If the debug module is armed triggers the state sequencer into the disarmed state. Active tracing sessions are terminated immediately, thus if tracing has not yet begun using begin-trigger, no trace information is stored. XGATE generated breakpoints are independent of the DBGBRK bits. The XGSBPE bit in DBGC1 determines if the XGATE S/W breakpoint function is enabled. The BDM bit in DBGC1 determines if the XGATE requested breakpoint causes the system to enter BDM mode or initiate a software interrupt (SWI).

19.4.3.5 Immediate Trigger

At any time independent of comparator matches or external tag signals it is possible to initiate a tracing session and/or breakpoint by writing to the TRIG bit in DBGC1. This triggers the state sequencer into the final state and issues a forced breakpoint request to both CPU and XGATE.

19.4.3.6 Trigger Priorities

In case of simultaneous triggers, the priority is resolved according to Table 19-38. The lower priority trigger is suppressed. It is thus possible to miss a lower priority trigger if it occurs simultaneously with a trigger of a higher priority. The trigger priorities described in Table 19-38 dictate that in the case of simultaneous matches, the match on the lower channel number ([0,1,2,3) has priority. The SC[3:0] encoding ensures that a match leading to final state has priority over all other matches independent of current state sequencer state. When configured for range modes a simultaneous match of comparators A and C generates an active match0 while match2 is suppressed.

Table 19-38. Trigger Priorities

Priority	Source	Action
Highest	XGATE	Immediate forced breakpoint.....(Tracing terminated immediately).
	TRIG	Enter final state
	External TAGHI/TAGLO	Enter State0
	Match0 (force or tag hit)	Trigger to next state as defined by state control registers
	Match1 (force or tag hit)	Trigger to next state as defined by state control registers
	Match2 (force or tag hit)	Trigger to next state as defined by state control registers
Lowest	Match3 (force or tag hit)	Trigger to next state as defined by state control registers

19.4.4 State Sequence Control

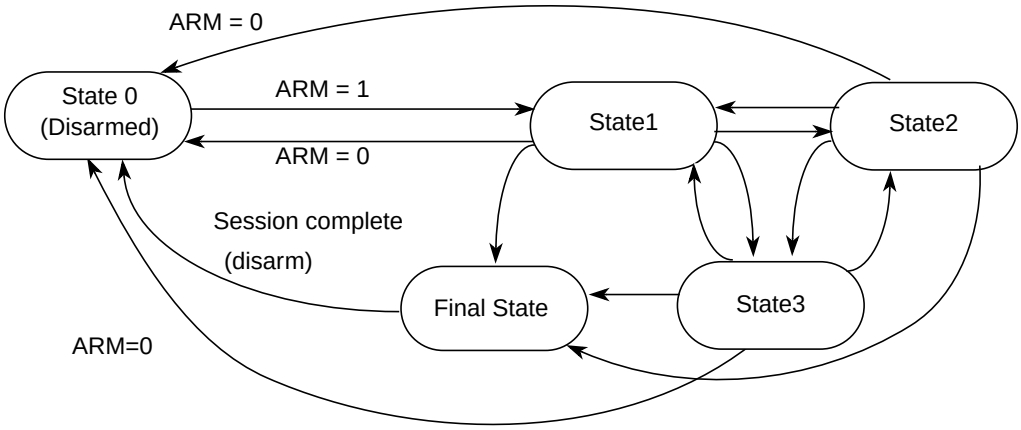

Figure 19-23. State Sequencer Diagram

The state sequence control allows a defined sequence of events to provide a trigger point for tracing of data in the trace buffer. Once the DBG module has been armed by setting the ARM bit in the DBGC1 register, then State1 of the state sequencer is entered. Further transitions between the states are then controlled by the state control registers and depend upon a selected trigger mode condition being met. From final state the only permitted transition is back to the disarmed state0. Transition between any of the states 1 to 3 is not restricted. Each transition updates the SSF[2:0] flags in DBGSR accordingly to indicate the current state.

Alternatively writing to the TRIG bit in DBGSC1, the final state is entered and tracing starts immediately if the TSOURCE bits are configured for tracing.

A tag hit through $\overline{\text{TAGHI}}/\overline{\text{TAGLO}}$ causes a breakpoint, if breakpoints are enabled, and ends tracing immediately independent of the trigger alignment bits TALIGN[1:0].

Furthermore, each comparator channel can be individually configured to generate an immediate breakpoint when a match occurs through the use of the BRK bits in the DBGxCTL registers independent of the state sequencer state. Thus it is possible to generate an immediate breakpoint on selected channels, while a state sequencer transition can be initiated by a match on other channels.

An XGATE S/W breakpoint request, if enabled causes a transition to the final state and generates a breakpoint request to the CPU immediately.

If neither tracing nor breakpoints are enabled then, when a forced match triggers to final state, it can only be returned to the disarmed state0 by clearing the ARM bit by software. This also applies to the case that BDM breakpoints are enabled, but the BDM is disabled. Furthermore if neither tracing nor breakpoints are enabled, forced triggers on channels with BRK set cause a transition to the state determined by the state sequencer as if the BRK bit were not being used.

If neither tracing nor breakpoints are enabled then when a tagged match triggers to final state, the state sequencer returns to the disarmed state0.

19.4.4.1 Final State

On entering final state a trigger may be issued to the trace buffer according to the trace position control as defined by the TALIGN field (see Section 19.3.1.3, “Debug Trace Control Register (DBGTCR)”). If the TSOURCE bits in the trace control register DBGTCR are cleared then the trace buffer is disabled and the transition to final state can only generate a breakpoint request. In this case or upon completion of a tracing session when tracing is enabled, the ARM bit in the DBGC1 register is cleared, returning the module to the disarmed state0. If tracing is enabled a breakpoint request can occur at the end of the tracing session.

19.4.5 Trace Buffer Operation

The trace buffer is a 64 lines deep by 64-bits wide RAM array. The DBG module stores trace information in the RAM array in a circular buffer format. The CPU accesses the RAM array through a register window (DBGTBH:DBGTBL) using 16-bit wide word accesses. After each complete 64-bit trace buffer line is read via the CPU, an internal pointer into the RAM is incremented so that the next read will receive fresh information. Data is stored in the format shown in Table 19-39. After each store the counter register bits DBGCNT[6:0] are incremented. Tracing of CPU activity is disabled when the BDM is active but tracing of XGATE activity is still possible. Reading the trace buffer while the BDM is active returns invalid data and the trace buffer pointer is not incremented.

19.4.5.1 Trace Trigger Alignment

Using the TALIGN bits (see Section 19.3.1.3, “Debug Trace Control Register (DBGTCR)”) it is possible to align the trigger with the end, the middle or the beginning of a tracing session.

If end or mid tracing is selected, tracing begins when the ARM bit in DBGC1 is set and State1 is entered. The transition to final state if end is selected signals the end of the tracing session. The transition to final state if mid is selected signals that another 32 lines will be traced before ending the tracing session. Tracing with begin-trigger starts at the opcode of the trigger.

19.4.5.1.1 Storing with Begin-Trigger

Storing with begin-trigger, data is not stored in the trace buffer until the final state is entered. Once the trigger condition is met the DBG module will remain armed until 64 lines are stored in the trace buffer. If the trigger is at the address of the change-of-flow instruction the change of flow associated with the trigger will be stored in the trace buffer. Using begin-trigger together with tagging, if the tagged instruction is about to be executed then the trace is started. Upon completion of the tracing session the breakpoint is generated, thus the breakpoint does not occur at the tagged instruction boundary.

19.4.5.1.2 Storing with Mid-Trigger

Storing with mid-trigger, data is stored in the trace buffer as soon as the DBG module is armed. When the trigger condition is met, another 32 lines will be traced before ending the tracing session, irrespective of the number of lines stored before the trigger occurred, then the DBG module is disarmed and no more data is stored. If the trigger is at the address of a change of flow instruction the trigger event is not stored in the trace buffer. Using mid-trigger with tagging, if the tagged instruction is about to be executed then the trace

is continued for another 32 lines. Upon tracing completion the breakpoint is generated, thus the breakpoint does not occur at the tagged instruction boundary.

19.4.5.1.3 Storing with End-Trigger

Storing with end-trigger, data is stored in the trace buffer until the final state is entered, at which point the DBG module will become disarmed and no more data will be stored. If the trigger is at the address of a change of flow instruction the trigger event will not be stored in the trace buffer.

19.4.5.2 Trace Modes

The DBG module can operate in three trace modes. The mode is selected using the TRCMOD bits in the DBGTCR register. In each mode tracing of XGATE or CPU information is possible. The source for the trace is selected using the TSOURCE bits in the DBGTCR register. The modes are described in the following subsections. The trace buffer organization is shown in Table 19-39.

19.4.5.2.1 Normal Mode

In normal mode, change of flow (COF) addresses will be stored.

COF addresses are defined as follows for the CPU:

- Source address of taken conditional branches (long, short, bit-conditional, and loop primitives)
- Destination address of indexed JMP, JSR and CALL instruction.
- Destination address of RTI, RTS and RTC instructions
- Vector address of interrupts, except for SWI and BDM vectors

LBRA, BRA, BSR, BGND as well as non-indexed JMP, JSR, and CALL instructions are not classified as change of flow and are not stored in the trace buffer.

COF addresses are defined as follows for the XGATE:

- Source address of taken conditional branches
- Destination address of indexed JAL instructions.
- First XGATE code address, determined by the vector contained in the XGATE XGVBR register

Change-of-flow addresses stored include the full 23-bit address bus in the case of CPU, the 16-bit address bus for the XGATE module and an information byte, which contains a source/destination bit to indicate whether the stored address was a source address or destination address.

19.4.5.2.2 Loop1 Mode

Loop1 mode, similarly to normal mode also stores only COF address information to the trace buffer, it however allows the filtering out of redundant information.

The intent of loop1 mode is to prevent the trace buffer from being filled entirely with duplicate information from a looping construct such as delays using the DBNE instruction or polling loops using BRSET/BRCLR instructions. Immediately after address information is placed in the trace buffer, the DBG module writes this value into a background register. This prevents consecutive duplicate address entries in the trace buffer resulting from repeated branches.

Loop1 mode only inhibits consecutive duplicate source address entries that would typically be stored in most tight looping constructs. It does not inhibit repeated entries of destination addresses or vector addresses, since repeated entries of these would most likely indicate a bug in the user's code that the DBG module is designed to help find.

NOTE

In certain very tight loops, the source address will have already been fetched again before the background comparator is updated. This results in the source address being stored twice before further duplicate entries are suppressed. This condition occurs with branch-on-bit instructions when the branch is fetched by the first P-cycle of the branch or with loop-construct instructions in which the branch is fetched with the first or second P cycle. See examples below:

```
LOOP     INX                        ;1-byte instruction fetched by 1st P-cycle of BRCLR
         BRCLR    CMPTMP,#$0c,LOOP  ;the BRCLR instruction also will be fetched by 1st P-cycle
                                    ;of BRCLR

LOOP2    BRN*                       ; 2-byte instruction fetched by 1st P-cycle of DBNE
         NOP                        ; 1-byte instruction fetched by 2nd P-cycle of DBNE
         DBNE     A,LOOP2           ; this instruction also fetched by 2nd P-cycle of DBNE
```

19.4.5.2.3 Detail Mode

In detail mode, address and data for all memory and register accesses is stored in the trace buffer. In the case of XGATE tracing this means that initialization of the R1 register during a vector fetch is not traced. This mode is intended to supply additional information on indexed, indirect addressing modes where storing only the destination address would not provide all information required for a user to determine where the code is in error. This mode also features information byte storage to the trace buffer, for each address byte storage. The information byte indicates the size of access (word or byte), the type of access (read or write).

When tracing CPU activity in detail mode, all cycles are traced except those when the CPU is either in a free or opcode fetch cycle. In this mode the XGATE program counter is also traced to provide a snapshot of the XGATE activity. CXINF information byte bits indicate the type of XGATE activity occurring at the time of the trace buffer entry. When tracing CPU activity alone in detail mode, the address range can be limited to a range specified by the TRANGE bits in DBGTCR. This function uses comparators C and D to define an address range inside which CPU activity should be traced (see Table 19-10). Thus, the traced CPU activity can be restricted to register range accesses.

When tracing XGATE activity in detail mode, all cycles apart from opcode fetch and free cycles are stored to the trace buffer. Additionally the CPU program counter is stored at the time of the XGATE trace buffer entry to provide a snapshot of CPU activity.

19.4.5.3 Trace Buffer Organization

The buffer can be used to trace either from CPU, from XGATE or from both sources. An "X" prefix denotes information from the XGATE module, a "C" prefix denotes information from the CPU. ADRH,ADRM,ADRL denote address high, middle and low byte respectively. INF bytes contain control

information (R/W, S/D etc.). The numerical suffix indicates which tracing step. The information format for loop1 mode is the same as that of normal mode. Whilst tracing from XGATE or CPU only, in normal or loop1 modes each array line contains data from entries made at 2 separate times, thus in this case the DBGCNT[0] is incremented after each separate entry. In all other modes, DBGCNT[0] remains cleared while the other DBGCNT bits are incremented on each trace buffer entry.

XGATE and S12X_CPU COFs occur independently of each other and the profile of COFs for the 2 sources is totally different. When both sources are being traced in Normal or Loop1 mode, for each single entry from one source, there may be many entries from the other source and vice versa, depending on user code. COF events could occur far from each other in the time domain, on consecutive cycles or simultaneously. If a COF occurs in one source only in a particular cycle, then the trace buffer bytes that are mapped to the other source are redundant. Info byte bit CDV/XDV indicates that no useful information is stored in these bytes. This is the typical case. Only in the rare event that both XGATE and S12X_CPU COF cycles coincide is a valid trace buffer entry for both made, corresponding to the first line for mode "Both Normal/Loop1" in Table 19-39.

Single byte data accesses in detail mode are always stored to the low byte of the trace buffer (CDATAL or XDATAL) and the high byte is cleared. When tracing word accesses, the byte at the lower address is always stored to trace buffer byte3 and the byte at the higher address is stored to byte2

Table 19-39. Trace Buffer Organization

Mode	8-Byte Wide Word Buffer							
	7	6	5	4	3	2	1	0
XGATE DETAIL	CXINF1	CADRH1	CADRM1	CADRL1	XDATAH1	XDATAL1	XADRM1	XADRL1
	CXINF2	CADRH2	CADRM2	CADRL2	XDATAH2	XDATAL2	XADRM2	XADRL2
CPU DETAIL	CXINF1	CADRH1	CADRM1	CADRL1	CDATAH1	CDATAL1	XADRM1	XADRL1
	CXINF2	CADRH2	CADRM2	CADRL2	CDATAH2	CDATAL2	XADRM2	XADRL2
Both NORMAL / LOOP1	XINF0		XADRM0	XADRL0	CINF0	CADRH0	CADRM0	CADRL0
	[1]XINF1				CINF1	CADRH1	CADRM1	CADRL1
	[2]XINF2		XADRM2	XADRL2	CINF2			
XGATE NORMAL / LOOP1	XINF1		XADRM1	XADRL1	XINF0		XADRM0	XADRL0
	XINF3		XADRM3	XADRL3	XINF2		XADRM2	XADRL2
CPU NORMAL / LOOP1	CINF1	CADRH1	CADRM1	CADRL1	CINF0	CADRH0	CADRM0	CADRL0
	CINF3	CADRH3	CADRM3	CADRL3	CINF2	CADRH2	CADRM2	CADRL2

[1] COF in CPU only. XGATE trace buffer entries in this tracing step are invalid

[2] COF in XGATE only. CPU trace buffer entries in this tracing step are invalid

19.4.5.3.1 Information Byte Organization

The format of the control information byte for both CPU and XGATE modules is dependent upon the active trace mode and tracing source as described below. In normal mode or loop1 mode, tracing of XGATE activity XINF is used to store control information. In normal mode or loop1 mode, tracing of CPU activity CINF is used to store control information. In detail mode, CXINF contains the control information.

Bit 7	Bit 6	Bit 5	Bit 4	Bit 3	Bit 2	Bit 1	Bit 0
XSD	0	0	XDV	0	0	0	0

Figure 19-24. XGATE Information Byte XINF

Table 19-40. XINF Field Descriptions

Field	Description
7 XSD	**Source Destination Indicator** — This bit indicates if the corresponding stored address is a source or destination address. This is only used in normal and loop1 mode tracing. 0 Source Address 1 Destination Address
4 XDV	**Data Invalid Indicator** — This bit indicates if the trace buffer entry is invalid. It is only used when tracing from both sources in normal and loop1 mode, to indicate that the XGATE trace buffer entry is valid. 0 Trace buffer entry is invalid 1 Trace buffer entry is valid

Bit 7	Bit 6	Bit 5	Bit 4	Bit 3	Bit 2	Bit 1	Bit 0
CSD	0	0	CDV	0	0	0	0

Figure 19-25. CPU Information Byte CINF

Table 19-41. CINF Field Descriptions

Field	Description
7 CSD	**Source Destination Indicator** — This bit indicates if the corresponding stored address is a source or destination address. This is only used in normal and loop1 mode tracing. 0 Source Address 1 Destination Address
4 CDV	**Data Invalid Indicator** — This bit indicates if the trace buffer entry is invalid. It is only used when tracing from both sources in normal and loop1 mode, to indicate that the CPU trace buffer entry is valid. 0 Trace buffer entry is invalid 1 Trace buffer entry is valid

Bit 7	Bit 6	Bit 5	Bit 4	Bit 3	Bit 2	Bit 1	Bit 0
CFREE	CSZ	CRW	COCF	XACK	XSZ	XRW	XOCF

Figure 19-26. Information Byte CXINF

This describes the format of the information byte used only when tracing from CPU or XGATE in detail mode. When tracing from the CPU in detail mode, information is stored to the trace buffer on all cycles except opcode fetch and free cycles. The XGATE entry stored on the same line is a snapshot of the XGATE program counter. In this case the CSZ and CRW bits indicate the type of access being made by the CPU, while the XACK and XOCF bits indicate if the simultaneous XGATE cycle is a free cycle (no bus acknowledge) or opcode fetch cycle. Similarly when tracing from the XGATE in detail mode, information is stored to the trace buffer on all cycles except opcode fetch and free cycles. The CPU entry stored on the same line is a snapshot of the CPU program counter. In this case the XSZ and XRW bits indicate the type of access being made by the XGATE, while the CFREE and COCF bits indicate if the simultaneous CPU cycle is a free cycle or opcode fetch cycle.

Table 19-42. CXINF Field Descriptions

Field	Description
7 CREE	**CPU Free Cycle Indicator** — This bit indicates if the stored CPU address corresponds to a free cycle. This bit only contains valid information when tracing the XGATE accesses in detail mode. 0 Stored information corresponds to free cycle 1 Stored information does not correspond to free cycle
6 CSZ	**Access Type Indicator** — This bit indicates if the access was a byte or word size access.This bit only contains valid information when tracing CPU activity in detail mode. 0 Word Access 1 Byte Access
5 CRW	**Read Write Indicator** — This bit indicates if the corresponding stored address corresponds to a read or write access. This bit only contains valid information when tracing CPU activity in detail mode. 0 Write Access 1 Read Access
4 COCF	**CPU Opcode Fetch Indicator** — This bit indicates if the stored address corresponds to an opcode fetch cycle. This bit only contains valid information when tracing the XGATE accesses in detail mode. 0 Stored information does not correspond to opcode fetch cycle 1 Stored information corresponds to opcode fetch cycle
3 XACK	**XGATE Access Indicator** — This bit indicates if the stored XGATE address corresponds to a free cycle. This bit only contains valid information when tracing the CPU accesses in detail mode. 0 Stored information corresponds to free cycle 1 Stored information does not correspond to free cycle
2 XSZ	**Access Type Indicator** — This bit indicates if the access was a byte or word size access. This bit only contains valid information when tracing XGATE activity in detail mode. 0 Word Access 1 Byte Access

Table 19-42. CXINF Field Descriptions (continued)

Field	Description
1 XRW	**Read Write Indicator** — This bit indicates if the corresponding stored address corresponds to a read or write access. This bit only contains valid information when tracing XGATE activity in detail mode. 0 Read/Write Access 1 Access
0 XOCF	**XGATE Opcode Fetch Indicator** — This bit indicates if the stored address corresponds to an opcode fetch cycle.This bit only contains valid information when tracing the CPU accesses in detail mode. 0 Stored information does not correspond to opcode fetch cycle 1 Stored information corresponds to opcode fetch cycle

19.4.5.3.2 Reading Data from Trace Buffer

The data stored in the trace buffer can be read using either the background debug module (BDM) module or the CPU provided the DBG module is not armed, is configured for tracing (at least one TSOURCE bit is set) and the system not secured. When the ARM bit is written to 1 the trace buffer is locked to prevent reading. The trace buffer can only be unlocked for reading by a single aligned word write to DBGTB when the module is disarmed. Multiple writes to the DBGTB are not allowed since they increment the pointer.

The trace buffer can only be read through the DBGTB register using aligned word reads, any byte or misaligned reads return 0 and do not cause the trace buffer pointer to increment to the next trace buffer address. The trace buffer data is read out first-in first-out. By reading CNT in DBGCNT the number of valid 64-bit lines can be determined. DBGCNT will not decrement as data is read.

Whilst reading an internal pointer is used to determine the next line to be read. After a tracing session, the pointer points to the oldest data entry, thus if no overflow has occurred, the pointer points to line0, otherwise it points to the line with the oldest entry. The pointer is initialized by each aligned write to DBGTBH to point to the oldest data again. This enables an interrupted trace buffer read sequence to be easily restarted from the oldest data entry.

The least significant word of each 64-bit wide array line is read out first. This corresponds to the bytes 1 and 0 of Table 19-39. The bytes containing invalid information (shaded in Table 19-39) are also read out.

Reading the trace buffer while the DBG module is armed will return invalid data and no shifting of the RAM pointer will occur. Reading the trace buffer is not possible if both TSOURCE bits are cleared.

19.4.5.3.3 Trace Buffer Reset State

The trace buffer contents are not initialized by a system reset. Thus should a system reset occur, the trace session information from immediately before the reset occurred can be read out. The DBGCNT bits are not cleared by a system reset. Thus should a reset occur, the number of valid lines in the trace buffer is indicated by DBGCNT. The internal pointer to the current trace buffer address is initialized by unlocking the trace buffer thus points to the oldest valid data even if a reset occurred during the tracing session. Generally debugging occurrences of system resets is best handled using mid or end-trigger alignment since the reset may occur before the trace trigger, which in the begin-trigger alignment case means no information would be stored in the trace buffer.

19.4.6 Tagging

A tag follows program information as it advances through the instruction queue. When a tagged instruction reaches the head of the queue a tag hit occurs and triggers the state sequencer.

Each comparator control register features a TAG bit, which controls whether the comparator match will cause a trigger immediately or tag the opcode at the matched address. If a comparator is enabled for tagged comparisons, the address stored in the comparator match address registers must be an opcode address for the trigger to occur.

Both CPU and XGATE opcodes can be tagged with the comparator register TAG bits.

Using a begin-aligned trigger together with tagging, if the tagged instruction is about to be executed then the transition to the next state sequencer state occurs. If the transition is to the final state, tracing is started. Only upon completion of the tracing session can a breakpoint be generated. Similarly using a mid-aligned trigger with tagging, if the tagged instruction is about to be executed then the trace is continued for another 32 lines. Upon tracing completion the breakpoint is generated. Using an end-aligned trigger, when the tagged instruction is about to be executed and the next transition is to final state then a breakpoint is generated immediately, before the tagged instruction is carried out.

R/W monitoring is not useful for tagged operations since the trigger occurs based on the tagged opcode reaching the execution stage of the instruction queue. Similarly access size (SZ) monitoring and data bus monitoring is not useful if tagged triggering is selected, since the tag is attached to the opcode at the matched address and is not dependent on the data bus nor on the size of access. Thus these bits are ignored if tagged triggering is selected.

When configured for range comparisons and tagging, the ranges are accurate only to word boundaries.

CPU tagging is disabled when the BDM becomes active. Conversely, BDM firmware commands are not processed while tagging is active. XGATE tagging is possible when the BDM is active.

19.4.6.1 External Tagging using $\overline{\text{TAGHI}}$ and $\overline{\text{TAGLO}}$

External tagging using the external $\overline{\text{TAGHI}}$ and $\overline{\text{TAGLO}}$ pins can only be used to tag CPU opcodes; tagging of XGATE code using these pins is not possible. An external tag triggers the state sequencer into State0 when the tagged opcode reaches the execution stage of the instruction queue.

The pins operate independently, thus the state of one pin does not affect the function of the other. External tagging is possible in emulation modes only. The presence of logic level 0 on either pin at the rising edge of the external clock (ECLK) performs the function indicated in the Table 19-43. It is possible to tag both bytes of an instruction word. If a taghit comes from the low or high byte, a breakpoint generated according to the DBGBRK and BDM bits in DBGC1. Each time $\overline{\text{TAGHI}}$ or $\overline{\text{TAGLO}}$ are low on the rising edge of ECLK, the old tag is replaced by a new one

Table 19-43. Tag Pin Function

$\overline{\text{TAGHI}}$	$\overline{\text{TAGLO}}$	Tag
1	1	No tag
1	0	Low byte
0	1	High byte
0	0	Both bytes

19.4.7 Breakpoints

It is possible to select breakpoints to the XGATE and let the CPU continue operation, setting DBGBRK[0], or breakpoints to the CPU and let the XGATE continue operation setting, DBGBRK[1], or a breakpoint to both CPU and XGATE, setting both bits DBGBRK[1:0].

There are several ways to generate breakpoints to the XGATE and CPU modules.

- Through XGATE software breakpoint requests.
- From comparator channel triggers to final state.
- Using software to write to the TRIG bit in the DBGC1 register.
- From taghits generated using the external TAGHI and TAGLO pins.

19.4.7.1 XGATE Software Breakpoints

The XGATE software breakpoint instruction BRK can request an CPU breakpoint, via the DBG module. In this case, if the XGSBPE bit is set, the DBG module immediately generates a forced breakpoint request to the CPU, the state sequencer is returned to state0 and tracing, if active, is terminated. If configured for begin-trigger and tracing has not yet been triggered from another source, the trace buffer contains no new information. Breakpoint requests from the XGATE module do not depend upon the state of the DBGBRK or ARM bits in DBGC1. They depend solely on the state of the XGSBPE and BDM bits. Thus it is not necessary to ARM the DBG module to use XGATE software breakpoints to generate breakpoints in the CPU program flow, but it is necessary to set XGSBPE. Furthermore if a breakpoint to BDM is required, the BDM bit must also be set. When the XGATE requests an CPU breakpoint, the XGATE program flow stops by default, independent of the DBG module. The user can thus determine if an XGATE breakpoint has occurred by reading out the XGATE program counter over the BDM interface.

19.4.7.2 Breakpoints From Internal Comparator Channel Final State Triggers

Breakpoints can be generated when internal comparator channels trigger the state sequencer to the final state. If configured for tagging, then the breakpoint is generated when the tagged opcode reaches the execution stage of the instruction queue. If an end aligned trigger is selected or no tracing is enabled, breakpoints can be generated immediately, depending on the state of the DBGBRK[n] bits.

If a begin or mid aligned tracing session is selected by the TSOURCE bits, breakpoints are requested when the tracing session has completed, thus the breakpoint is requested only on completion of the subsequent trace (see Table 19-44). If the BRK bit is set on the triggering channel, then the breakpoint is generated immediately independent of tracing trigger alignment.

Table 19-44. Setup for Both XGATE and CPU Breakpoints

BRK	TALIGN	DBGBRK[n]	Type of Debug Session
0	00	0	Fill trace buffer until trigger (no breakpoints — keep running)
0	00	1	Fill trace buffer until trigger, then a breakpoint request occurs
0	01	0	Start trace buffer at trigger (no breakpoints — keep running)
0	01	1	Start trace buffer at trigger A breakpoint request occurs when trace buffer is full
0	10	0	Start trace buffer at trigger End tracing 32 line entries after trigger (no breakpoints — keep running)
0	10	1	Start trace buffer at trigger End tracing 32 line entries after trigger Request breakpoint after the 32 further trace buffer entries
1	00,01,10	0	Terminate tracing immediately on trigger without breakpoint
1	00,01,10	1	Terminate tracing and generate breakpoint immediately on trigger
x	11	x	Reserved

19.4.7.3 Breakpoints Generated Via The TRIG Bit

If a TRIG triggers occur, the final state is entered. Tracing trigger alignment is defined by the TALIGN bits. If a tracing session is selected by the TSOURCE bits, breakpoints are requested when the tracing session has completed, thus if begin or mid aligned triggering is selected, the breakpoint is requested only on completion of the subsequent trace. If no tracing session is selected, breakpoints are requested immediately. TRIG breakpoints are possible even if the DBG module is disarmed. TRIG bit breakpoints are enabled by setting DBGBRK[n].

19.4.7.4 Breakpoints via TAGHI Or TAGLO Pin Taghits

Tagging using the external TAGHI/TAGLO pins always ends the session immediately at the tag hit. It is always end aligned, independent of internal channel trigger alignment configuration. External tag breakpoints are always mapped to the CPU, are only possible in emulation modes and can be enabled by setting DBGBRK[1].

19.4.7.5 DBG Breakpoint Priorities

XGATE software breakpoints have the highest priority. Active tracing sessions are terminated immediately.

If a TRIG triggers occur after begin or mid aligned tracing has already been triggered by a comparator instigated transition to final state, then TRIG no longer has an effect. When the associated tracing session is complete, the breakpoint occurs. Similarly if a TRIG is followed by a subsequent trigger from a comparator channel whose BRK=0, it has no effect, since tracing has already started.

If a comparator tag hit occurs simultaneously with an external $\overline{\text{TAGHI}}/\overline{\text{TAGLO}}$ hit, the state sequencer enters State0. $\overline{\text{TAGHI}}/\overline{\text{TAGLO}}$ triggers are always end aligned, to end tracing immediately, independent of the tracing trigger alignment bits TALIGN[1:0].

19.4.7.5.1 DBG Breakpoint priorities, mapping and BDM interfacing

Breakpoint operation is dependent on the state of the BDM module. If the BDM module is active, the CPU is executing out of BDM firmware and S12X breakpoints are disabled. In addition, while executing a BDM TRACE command, tagging into BDM is disabled.

Table 19-45. Breakpoint Mapping Summary

DBGBRK[1] (DBGC1[3])[1]	BDM bit (DBGC1[4])	BDM enabled	BDM active	Type of Debug Session
0	X	X	X	No Breakpoint
1	0	0	0	Breakpoint to SWI
1	0	1	X	Illegal Configuration. Do Not Use.[2]
1	1	0	0	Illegal Configuration. Do Not Use. [3]
1	1	1	0	Breakpoint to BDM
1	1	1	1	No Breakpoint

[1] All sources except XGATE software BKP, which are independent of this bit.
[2]The DBGC1[4] bit (BDM) must be set if using the BDM interface together with the DBG module. Failure to set this bit could result in XGATE generated breakpoints to SWI during BDM firmware execution corrupting the S12X PC return address, should the user have entered BDM via the BACKGROUND command or BGND instruction.
[3]End aligned tagged Breakpoint to SWI. Begin, Mid aligned and Forced Breakpoints disabled

If BDM is not active, the breakpoint will give priority to BDM requests over SWI requests if the breakpoint happens to coincide with a SWI instruction in the user's code. On returning from BDM, the SWI from user code gets executed.

BDM cannot be entered from a breakpoint unless the ENABLE bit is set in the BDM. If entry to BDM via a BGND instruction is attempted and the ENABLE bit in the BDM is cleared, the CPU actually executes the BDM firmware code. It checks the ENABLE and returns if ENABLE is not set. If not serviced by the monitor then the breakpoint is re-asserted when the BDM returns to normal CPU flow.

If the comparator register contents coincide with the SWI/BDM vector address then an SWI in user code and DBG breakpoint could occur simultaneously. The CPU ensures that BDM requests have a higher priority than SWI requests. Returning from the BDM/SWI service routine care must be taken to avoid re-triggering a breakpoint.

When program control returns from a tagged breakpoint using an RTI or BDM GO command without program counter modification it will return to the instruction whose tag generated the breakpoint. Thus care must be taken to avoid re triggering a breakpoint at the same location. This can be done by reconfiguring the DBG module in the SWI routine, (SWI configuration), or by executing a TRACE command before the GO (BDM configuration) to increment the program flow past the tagged instruction.

Comparators should not be configured for the vector address range while tagging, since these addresses are not opcode addresses

Chapter 20
S12X Debug (S12XDBGV3) Module

20.1 Introduction

The S12XDBG module provides an on-chip trace buffer with flexible triggering capability to allow non-intrusive debug of application software. The S12XDBG module is optimized for the HCS12X 16-bit architecture and allows debugging of both S12XCPU and XGATE module operations.

Typically the S12XDBG module is used in conjunction with the S12XBDM module, whereby the user configures the S12XDBG module for a debugging session over the BDM interface. Once configured the S12XDBG module is armed and the device leaves BDM Mode returning control to the user program, which is then monitored by the S12XDBG module. Alternatively the S12XDBG module can be configured over a serial interface using SWI routines.

20.1.1 Glossary Of Terms

COF: Change Of Flow. Change in the program flow due to a conditional branch, indexed jump or interrupt.

BDM : Background Debug Mode

DUG: Device User Guide, describing the features of the device into which the DBG is integrated.

WORD: 16 bit data entity

Data Line : 64 bit data entity

XGATE : S12X family programmable Direct Memory Access Module

CPU : S12X_CPU module

Tag : Tags can be attached to XGATE or CPU opcodes as they enter the instruction pipe. If the tagged opcode reaches the execution stage a tag hit occurs.

20.1.2 Overview

The comparators monitor the bus activity of the S12XCPU and XGATE modules. When a match occurs the control logic can trigger the state sequencer to a new state. On a transition to the Final State, bus tracing is triggered and/or a breakpoint can be generated.

Independent of comparator matches a transition to Final State with associated tracing and breakpoint can be triggered by the external $\overline{\text{TAGHI}}$ and $\overline{\text{TAGLO}}$ signals, by an XGATE module S/W breakpoint request or an immediate trigger, instigated by writing to the TRIG control bit.

The trace buffer is visible through a 2-byte window in the register address map and can be read out using standard 16-bit word reads. Tracing is disabled when the MCU system is secured.

20.1.3 Features

- Four comparators (A, B, C, and D)
  - Comparators A and C compare the full address bus and full 16-bit data bus
  - Comparators A and C feature a data bus mask register
  - Comparators B and D compare the full address bus only
  - Each comparator can be configured to monitor either S12XCPU or XGATE buses
  - Each comparator features control of R/W and byte/word access cycles
  - Comparisons can be used as triggers for the state sequencer
- Three comparator modes
  - Simple address/data comparator match mode
  - Inside address range mode, Addmin ≤ Address ≤ Addmax
  - Outside address range match mode, Address < Addmin or Address > Addmax
- Two types of triggers
  - Tagged — This triggers just before a specific instruction begins execution
  - Force — This triggers on the first instruction boundary after a match occurs.
- Three types of breakpoints
  - S12XCPU breakpoint entering BDM on breakpoint (BDM)
  - S12XCPU breakpoint executing SWI on breakpoint (SWI)
  - XGATE breakpoint
- Three trigger modes independent of comparators
  - External instruction tagging (associated with S12XCPU instructions only)
  - XGATE S/W breakpoint request
  - TRIG Immediate software trigger
- Four trace modes
  - Normal: change of flow (COF) PC information is stored (see Section 20.4.5.2.1) for change of flow definition.
  - Loop1: same as Normal but inhibits consecutive duplicate source address entries
  - Detail: address and data for all cycles except free cycles and opcode fetches are stored
  - Pure PC: All program counter addresses are stored.
- 4-stage state sequencer for trace buffer control
  - Tracing session trigger linked to Final State of state sequencer
  - Begin, End, and Mid alignment of tracing to trigger

20.1.4 Modes of Operation

The S12XDBG module can be used in all MCU functional modes.

During BDM hardware accesses and whilst the BDM module is active, S12XCPU monitoring is disabled. Thus breakpoints, comparators, and bus tracing mapped to the S12XCPU are disabled but XGATE bus monitoring accessing the S12XDBG registers, including comparator registers, is still possible. While in active BDM or during hardware BDM accesses, XGATE activity can still be compared, traced and can be used to generate a breakpoint to the XGATE module. When the S12XCPU enters active BDM Mode through a BACKGROUND command, with the S12XDBG module armed, the S12XDBG remains armed.

The S12XDBG module tracing is disabled if the MCU is secure. However, breakpoints can still be generated if the MCU is secure.

Table 20-1. Mode Dependent Restriction Summary

BDM Enable	BDM Active	MCU Secure	Comparator Matches Enabled	Breakpoints Possible	Tagging Possible	Tracing Possible
x	x	1	Yes	Yes	Yes	No
0	0	0	Yes	Only SWI	Yes	Yes
0	1	0	Active BDM not possible when not enabled			
1	0	0	Yes	Yes	Yes	Yes
1	1	0	XGATE only	XGATE only	XGATE only	XGATE only

20.1.5 Block Diagram

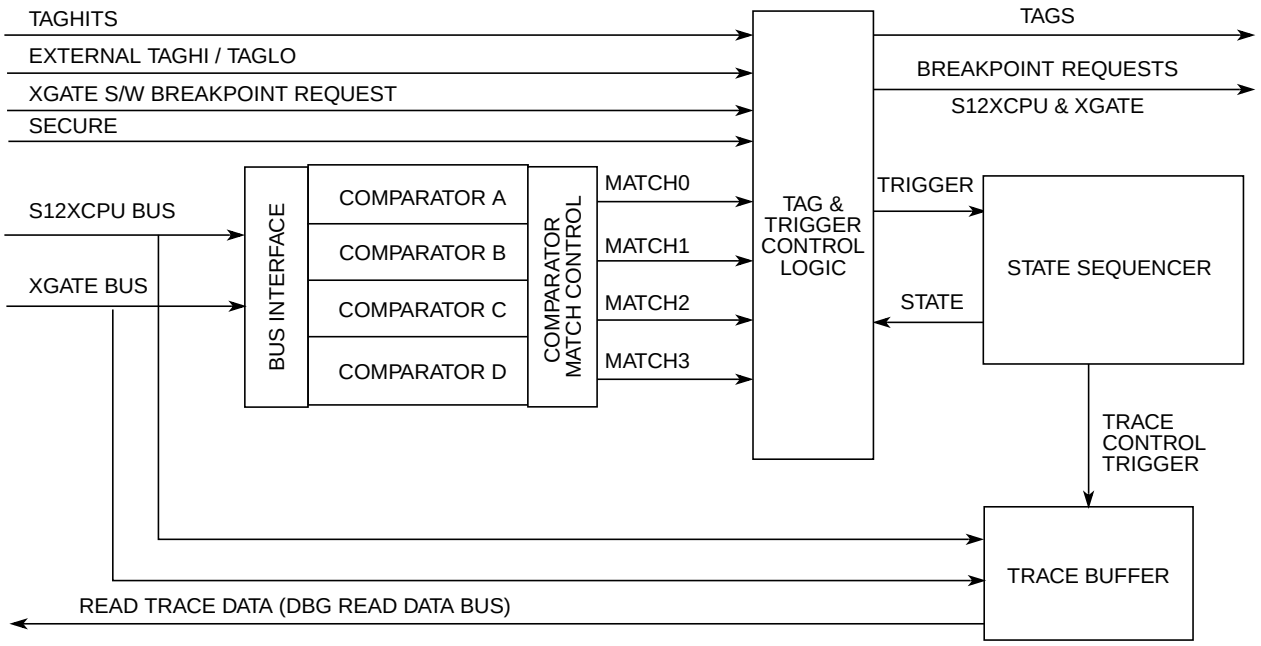

Figure 20-1. Debug Module Block Diagram

20.2 External Signal Description

The S12XDBG sub-module features two external tag input signals. See Device User Guide (DUG) for the mapping of these signals to device pins. These tag pins may be used for the external tagging in emulation modes only.

Table 20-2. External System Pins Associated With S12XDBG

Pin Name	Pin Functions	Description
$\overline{\text{TAGHI}}$ (See DUG)	TAGHI	When instruction tagging is on, tags the high half of the instruction word being read into the instruction queue.
$\overline{\text{TAGLO}}$ (See DUG)	TAGLO	When instruction tagging is on, tags the low half of the instruction word being read into the instruction queue.
$\overline{\text{TAGLO}}$ (See DUG)	Unconditional Tagging Enable	In emulation modes, a low assertion on this pin in the 7th or 8th cycle after the end of reset enables the Unconditional Tagging function.

20.3 Memory Map and Registers

20.3.1 Module Memory Map

A summary of the registers associated with the S12XDBG sub-block is shown in Table 20-2. Detailed descriptions of the registers and bits are given in the subsections that follow.

Address	Name		Bit 7	6	5	4	3	2	1	Bit 0
0x0020	DBGC1	R	ARM	0	XGSBPE	BDM	DBGBRK		COMRV	
		W		TRIG						
0x0021	DBGSR	R	TBF	EXTF	0	0	0	SSF2	SSF1	SSF0
		W								
0x0022	DBGTCR	R	TSOURCE		TRANGE		TRCMOD		TALIGN	
		W								
0x0023	DBGC2	R	0	0	0	0	CDCM		ABCM	
		W								
0x0024	DBGTBH	R	Bit 15	Bit 14	Bit 13	Bit 12	Bit 11	Bit 10	Bit 9	Bit 8
		W								
0x0025	DBGTBL	R	Bit 7	Bit 6	Bit 5	Bit 4	Bit 3	Bit 2	Bit 1	Bit 0
		W								
0x0026	DBGCNT	R	0	CNT						
		W								
0x0027	DBGSCRX	R	0	0	0	0	SC3	SC2	SC1	SC0
		W								
0x0027	DBGMFR	R	0	0	0	0	MC3	MC2	MC1	MC0
		W								
0x0028[1]	DBGXCTL (COMPA/C)	R	0	NDB	TAG	BRK	RW	RWE	SRC	COMPE
		W								
0x0028[2]	DBGXCTL (COMPB/D)	R/W	SZE	SZ	TAG	BRK	RW	RWE	SRC	COMPE
0x0029	DBGXAH	R	0	Bit 22	21	20	19	18	17	Bit 16
		W								

Figure 20-2. Quick Reference to S12XDBG Registers

Address	Name		Bit 7	6	5	4	3	2	1	Bit 0
0x002A	DBGXAM	R/W	Bit 15	14	13	12	11	10	9	Bit 8
0x002B	DBGXAL	R/W	Bit 7	6	5	4	3	2	1	Bit 0
0x002C	DBGXDH	R/W	Bit 15	14	13	12	11	10	9	Bit 8
0x002D	DBGXDL	R/W	Bit 7	6	5	4	3	2	1	Bit 0
0x002E	DBGXDHM	R/W	Bit 15	14	13	12	11	10	9	Bit 8
0x002F	DBGXDLM	R/W	Bit 7	6	5	4	3	2	1	Bit 0

[1] This represents the contents if the Comparator A or C control register is blended into this address.
[2] This represents the contents if the Comparator B or D control register is blended into this address

Figure 20-2. Quick Reference to S12XDBG Registers

20.3.2 Register Descriptions

This section consists of the S12XDBG control and trace buffer register descriptions in address order. Each comparator has a bank of registers that are visible through an 8-byte window between 0x0028 and 0x002F in the S12XDBG module register address map. When ARM is set in DBGC1, the only bits in the S12XDBG module registers that can be written are ARM, TRIG, and COMRV[1:0]

20.3.2.1 Debug Control Register 1 (DBGC1)

Address: 0x0020

	7	6	5	4	3	2	1	0
R	ARM	0	XGSBPE	BDM	DBGBRK		COMRV	
W		TRIG						
Reset	0	0	0	0	0	0	0	0

Figure 20-3. Debug Control Register (DBGC1)

Read: Anytime

Write: Bits 7, 1, 0 anytime, bit 6 can be written anytime but always reads back as 0.
Bits 5:2 anytime S12XDBG is not armed.

NOTE

When disarming the S12XDBG by clearing ARM with software, the contents of bits[5:2] are not affected by the write, since up until the write operation, ARM = 1 preventing these bits from being written. These bits must be cleared using a second write if required.

Table 20-3. DBGC1 Field Descriptions

Field	Description
7 ARM	**Arm Bit** — The ARM bit controls whether the S12XDBG module is armed. This bit can be set and cleared by user software and is automatically cleared on completion of a tracing session, or if a breakpoint is generated with tracing not enabled. On setting this bit the state sequencer enters State1. When ARM is set, the only bits in the S12XDBG module registers that can be written are ARM and TRIG. 0 Debugger disarmed 1 Debugger armed
6 TRIG	**Immediate Trigger Request Bit** — This bit when written to 1 requests an immediate trigger independent of comparator or external tag signal status. When tracing is complete a forced breakpoint may be generated depending upon DBGBRK and BDM bit settings. This bit always reads back a 0. Writing a 0 to this bit has no effect. If both TSOURCE bits are clear no tracing is carried out. If tracing has already commenced using BEGIN- or MID trigger alignment, it continues until the end of the tracing session as defined by the TALIGN bit settings, thus TRIG has no affect. In secure mode tracing is disabled and writing to this bit has no effect. 0 Do not trigger until the state sequencer enters the Final State. 1 Enter Final State immediately and issue forced breakpoint request when trace buffer is full.
5 XGSBPE	**XGATE S/W Breakpoint Enable** — The XGSBPE bit controls whether an XGATE S/W breakpoint request is passed to the S12XCPU. The XGATE S/W breakpoint request is handled by the S12XDBG module, which can request an S12XCPU breakpoint depending on the state of this bit. 0 XGATE S/W breakpoint request is disabled 1 XGATE S/W breakpoint request is enabled
4 BDM	**Background Debug Mode Enable** — This bit determines if a S12X breakpoint causes the system to enter Background Debug Mode (BDM) or initiate a Software Interrupt (SWI). It has no affect on S12XDBG functionality. If this bit is set but the BDM is not enabled by the ENBDM bit in the BDM module, then breakpoints default to SWI. 0 Breakpoint to Software Interrupt if BDM inactive. Otherwise no breakpoint. 1 Breakpoint to BDM, if BDM enabled. Otherwise breakpoint to SWI
3–2 DBGBRK	**S12XDBG Breakpoint Enable Bits** — The DBGBRK bits control whether the debugger will request a breakpoint to either S12XCPU or XGATE or both upon reaching the state sequencer Final State. If tracing is enabled, the breakpoint is generated on completion of the tracing session. If tracing is not enabled, the breakpoint is generated immediately. Please refer to Section 20.4.7 for further details. XGATE software breakpoints are independent of the DBGBRK bits. XGATE software breakpoints force a breakpoint to the S12XCPU independent of the DBGBRK bit field configuration. See Table 20-4.
1–0 COMRV	**Comparator Register Visibility Bits** — These bits determine which bank of comparator register is visible in the 8-byte window of the S12XDBG module address map, located between 0x0028 to 0x002F. Furthermore these bits determine which register is visible at the address 0x0027. See Table 20-5.

Table 20-4. DBGBRK Encoding

DBGBRK	Resource Halted by Breakpoint
00	No breakpoint generated
01	XGATE breakpoint generated
10	S12XCPU breakpoint generated
11	Breakpoints generated for S12XCPU and XGATE

Table 20-5. COMRV Encoding

COMRV	Visible Comparator	Visible Register at 0x0027
00	Comparator A	DBGSCR1
01	Comparator B	DBGSCR2

Table 20-5. COMRV Encoding

COMRV	Visible Comparator	Visible Register at 0x0027
10	Comparator C	DBGSCR3
11	Comparator D	DBGMFR

20.3.2.2 Debug Status Register (DBGSR)

Address: 0x0021

	7	6	5	4	3	2	1	0
R	TBF	EXTF	0	0	0	SSF2	SSF1	SSF0
W								
Reset	—	0	0	0	0	0	0	0
POR	0	0	0	0	0	0	0	0

= Unimplemented or Reserved

Figure 20-4. Debug Status Register (DBGSR)

Read: Anytime

Write: Never

Table 20-6. DBGSR Field Descriptions

Field	Description
7 TBF	**Trace Buffer Full** — The TBF bit indicates that the trace buffer has stored 64 or more lines of data since it was last armed. If this bit is set, then all 64 lines will be valid data, regardless of the value of DBGCNT bits CNT[6:0]. The TBF bit is cleared when ARM in DBGC1 is written to a one. The TBF is cleared by the power on reset initialization. Other system generated resets have no affect on this bit
6 EXTF	**External Tag Hit Flag** — The EXTF bit indicates if a tag hit condition from an external $\overline{\text{TAGHI}}$/$\overline{\text{TAGLO}}$ tag was met since arming. This bit is cleared when ARM in DBGC1 is written to a one. 0 External tag hit has not occurred 1 External tag hit has occurred
2–0 SSF[2:0]	**State Sequencer Flag Bits** — The SSF bits indicate in which state the State Sequencer is currently in. During a debug session on each transition to a new state these bits are updated. If the debug session is ended by software clearing the ARM bit, then these bits retain their value to reflect the last state of the state sequencer before disarming. If a debug session is ended by an internal trigger, then the state sequencer returns to state0 and these bits are cleared to indicate that state0 was entered during the session. On arming the module the state sequencer enters state1 and these bits are forced to SSF[2:0] = 001. See Table 20-7**.**

Table 20-7. SSF[2:0] — State Sequence Flag Bit Encoding

SSF[2:0]	Current State
000	State0 (disarmed)
001	State1
010	State2
011	State3
100	Final State
101,110,111	Reserved

20.3.2.3 Debug Trace Control Register (DBGTCR)

Address: 0x0022

	7	6	5	4	3	2	1	0
R W	TSOURCE		TRANGE		TRCMOD		TALIGN	
Reset	0	0	0	0	0	0	0	0

Figure 20-5. Debug Trace Control Register (DBGTCR)

Read: Anytime

Write: Bits 7:6 only when S12XDBG is neither secure nor armed.
Bits 5:0 anytime the module is disarmed.

Table 20-8. DBGTCR Field Descriptions

Field	Description
7–6 TSOURCE	**Trace Source Control Bits** — The TSOURCE bits select the data source for the tracing session. If the MCU system is secured, these bits cannot be set and tracing is inhibited. See Table 20-9.
5–4 TRANGE	**Trace Range Bits** — The TRANGE bits allow filtering of trace information from a selected address range when tracing from the S12XCPU in Detail Mode. The XGATE tracing range cannot be narrowed using these bits. To use a comparator for range filtering, the corresponding COMPE and SRC bits must remain cleared. If the COMPE bit is not clear then the comparator will also be used to generate state sequence triggers. If the corresponding SRC bit is set the comparator is mapped to the XGATE buses, the TRANGE bits have no effect on the valid address range, memory accesses within the whole memory map are traced. See Table 20-10.
3–2 TRCMOD	**Trace Mode Bits** — See Section 20.4.5.2 for detailed Trace Mode descriptions. In Normal Mode, change of flow information is stored. In Loop1 Mode, change of flow information is stored but redundant entries into trace memory are inhibited. In Detail Mode, address and data for all memory and register accesses is stored. See Table 20-11.
1–0 TALIGN	**Trigger Align Bits** — These bits control whether the trigger is aligned to the beginning, end or the middle of a tracing session. See Table 20-12.

Table 20-9. TSOURCE — Trace Source Bit Encoding

TSOURCE	Tracing Source
00	No tracing requested
01	S12XCPU
10[1]	XGATE
11[1,2]	Both S12XCPU and XGATE

[1] No range limitations are allowed. Thus tracing operates as if TRANGE = 00.
[2] No Detail Mode tracing supported. If TRCMOD = 10, no information is stored.

Table 20-10. TRANGE Trace Range Encoding

TRANGE	Tracing Range
00	Trace from all addresses (No filter)
01	Trace only in address range from $00000 to Comparator D
10	Trace only in address range from Comparator C to $7FFFFF
11	Trace only in range from Comparator C to Comparator D

Table 20-11. TRCMOD Trace Mode Bit Encoding

TRCMOD	Description
00	Normal
01	Loop1
10	Detail
11	Pure PC

Table 20-12. TALIGN Trace Alignment Encoding

TALIGN	Description
00	Trigger at end of stored data
01	Trigger before storing data
10	Trace buffer entries before and after trigger
11	Reserved

20.3.2.4 Debug Control Register2 (DBGC2)

Address: 0x0023

	7	6	5	4	3	2	1	0
R	0	0	0	0	CDCM		ABCM	
W								
Reset	0	0	0	0	0	0	0	0

= Unimplemented or Reserved

Figure 20-6. Debug Control Register2 (DBGC2)

Read: Anytime

Write: Anytime the module is disarmed.

This register configures the comparators for range matching.

Table 20-13. DBGC2 Field Descriptions

Field	Description
3–2 CDCM[1:0]	**C and D Comparator Match Control** — These bits determine the C and D comparator match mapping as described in Table 20-14.
1–0 ABCM[1:0]	**A and B Comparator Match Control** — These bits determine the A and B comparator match mapping as described in Table 20-15.

Table 20-14. CDCM Encoding

CDCM	Description
00	Match2 mapped to comparator C match..... Match3 mapped to comparator D match.
01	Match2 mapped to comparator C/D inside range..... Match3 disabled.
10	Match2 mapped to comparator C/D outside range..... Match3 disabled.
11	Reserved

Table 20-15. ABCM Encoding

ABCM	Description
00	Match0 mapped to comparator A match..... Match1 mapped to comparator B match.
01	Match 0 mapped to comparator A/B inside range..... Match1 disabled.
10	Match 0 mapped to comparator A/B outside range..... Match1 disabled.
11	Reserved

20.3.2.5 Debug Trace Buffer Register (DBGTBH:DBGTBL)

Address: 0x0024, 0x0025

	15	14	13	12	11	10	9	8	7	6	5	4	3	2	1	0
R W	Bit 15	Bit 14	Bit 13	Bit 12	Bit 11	Bit 10	Bit 9	Bit 8	Bit 7	Bit 6	Bit 5	Bit 4	Bit 3	Bit 2	Bit 1	Bit 0
Reset	X	X	X	X	X	X	X	X	X	X	X	X	X	X	X	X

Figure 20-7. Debug Trace Buffer Register (DBGTB)

Read: Anytime when unlocked and not secured and not armed.

Write: Aligned word writes when disarmed unlock the trace buffer for reading but do not affect trace buffer contents.

Table 20-16. DBGTB Field Descriptions

Field	Description
15–0 Bit[15:0]	**Trace Buffer Data Bits** — The Trace Buffer Register is a window through which the 64-bit wide data lines of the Trace Buffer may be read 16 bits at a time. Each valid read of DBGTB increments an internal trace buffer pointer which points to the next address to be read. When the ARM bit is written to 1 the trace buffer is locked to prevent reading. The trace buffer can only be unlocked for reading by writing to DBGTB with an aligned word write when the module is disarmed. The DBGTB register can be read only as an aligned word, any byte reads or misaligned access of these registers will return 0 and will not cause the trace buffer pointer to increment to the next trace buffer address. The same is true for word reads while the debugger is armed. System resets do not affect the trace buffer contents. The POR state is undefined.

20.3.2.6 Debug Count Register (DBGCNT)

Address: 0x0026

	7	6	5	4	3	2	1	0
R	0	CNT						
W								
Reset	0	—	—	—	—	—	—	—
POR	0	0	0	0	0	0	0	0

= Unimplemented or Reserved

Figure 20-8. Debug Count Register (DBGCNT)

Read: Anytime

Write: Never

Table 20-17. DBGCNT Field Descriptions

Field	Description
6–0 CNT[6:0]	**Count Value** — The CNT bits [6:0] indicate the number of valid data 64-bit data lines stored in the Trace Buffer. Table 20-18 shows the correlation between the CNT bits and the number of valid data lines in the Trace Buffer. When the CNT rolls over to zero, the TBF bit in DBGSR is set and incrementing of CNT will continue in end-trigger or mid-trigger mode. The DBGCNT register is cleared when ARM in DBGC1 is written to a one. The DBGCNT register is cleared by power-on-reset initialization but is not cleared by other system resets. Thus should a reset occur during a debug session, the DBGCNT register still indicates after the reset, the number of valid trace buffer entries stored before the reset occurred. The DBGCNT register is not decremented when reading from the trace buffer.

Table 20-18. CNT Decoding Table

TBF (DBGSR)	CNT[6:0]	Description
0	0000000	No data valid
0	0000001	32 bits of one line valid[1]
0	0000010 0000100 0000110 .. 1111100	1 line valid 2 lines valid 3 lines valid .. 62 lines valid
0	1111110	63 lines valid
1	0000000	64 lines valid; if using Begin trigger alignment, ARM bit will be cleared and the tracing session ends.
1	0000010 1111110	64 lines valid, oldest data has been overwritten by most recent data

[1] This applies to Normal/Loop1 Modes when tracing from either S12XCPU or XGATE only.

20.3.2.7 Debug State Control Registers

There is a dedicated control register for each of the state sequencer states 1 to 3 that determines if transitions from that state are allowed, depending upon comparator matches or tag hits, and defines the next state for the state sequencer following a match. The three debug state control registers are located at the same address in the register address map (0x0027). Each register can be accessed using the COMRV bits in DBGC1 to blend in the required register. The COMRV = 11 value blends in the match flag register (DBGMFR).

Table 20-19. State Control Register Access Encoding

COMRV	Visible State Control Register
00	DBGSCR1
01	DBGSCR2
10	DBGSCR3
11	DBGMFR

20.3.2.7.1 Debug State Control Register 1 (DBGSCR1)

Address: 0x0027

	7	6	5	4	3	2	1	0
R	0	0	0	0	SC3	SC2	SC1	SC0
W								
Reset	0	0	0	0	0	0	0	0

= Unimplemented or Reserved

Figure 20-9. Debug State Control Register 1 (DBGSCR1)

Read: Anytime

Write: Anytime when S12XDBG not armed.

This register is visible at 0x0027 only with COMRV[1:0] = 00. The state control register 1 selects the targeted next state whilst in State1. The matches refer to the match channels of the comparator match control logic as depicted in Figure 20-1 and described in Section 20.3.2.8.1”. Comparators must be enabled by setting the comparator enable bit in the associated DBGXCTL control register.

Table 20-20. DBGSCR1 Field Descriptions

Field	Description
3–0 SC[3:0]	These bits select the targeted next state whilst in State1, based upon the match event.

Table 20-21. State1 Sequencer Next State Selection

SC[3:0]	Description
0000	Any match triggers to state2
0001	Any match triggers to state3
0010	Any match triggers to Final State
0011	Match2 triggers to State2..... Other matches have no effect
0100	Match2 triggers to State3..... Other matches have no effect
0101	Match2 triggers to Final State..... Other matches have no effect
0110	Match0 triggers to State2..... Match1 triggers to State3..... Other matches have no effect
0111	Match1 triggers to State3..... Match0 triggers Final State..... Other matches have no effect
1000	Match0 triggers to State2..... Match2 triggers to State3..... Other matches have no effect
1001	Match2 triggers to State3..... Match0 triggers Final State..... Other matches have no effect
1010	Match1 triggers to State2..... Match3 triggers to State3..... Other matches have no effect
1011	Match3 triggers to State3..... Match1 triggers to Final State..... Other matches have no effect
1100	Match3 has no effect..... All other matches (M0,M1,M2) trigger to State2
1101	Reserved
1110	Reserved
1111	Reserved

The trigger priorities described in Table 20-38 dictate that in the case of simultaneous matches, the match on the lower channel number (0,1,2,3) has priority. The SC[3:0] encoding ensures that a match leading to final state has priority over all other matches.

20.3.2.7.2 Debug State Control Register 2 (DBGSCR2)

Address: 0x0027

	7	6	5	4	3	2	1	0
R	0	0	0	0	SC3	SC2	SC1	SC0
W								
Reset	0	0	0	0	0	0	0	0

= Unimplemented or Reserved

Figure 20-10. Debug State Control Register 2 (DBGSCR2)

Read: Anytime

Write: Anytime when S12XDBG not armed.

This register is visible at 0x0027 only with COMRV[1:0] = 01. The state control register 2 selects the targeted next state whilst in State2. The matches refer to the match channels of the comparator match control logic as depicted in Figure 20-1 and described in Section 20.3.2.8.1”. Comparators must be enabled by setting the comparator enable bit in the associated DBGXCTL control register.

Table 20-22. DBGSCR2 Field Descriptions

Field	Description
3–0 SC[3:0]	These bits select the targeted next state whilst in State2, based upon the match event.

Table 20-23. State2 —Sequencer Next State Selection

SC[3:0]	Description
0000	Any match triggers to state1
0001	Any match triggers to state3
0010	Any match triggers to Final State
0011	Match3 triggers to State1..... Other matches have no effect
0100	Match3 triggers to State3..... Other matches have no effect
0101	Match3 triggers to Final State..... Other matches have no effect
0110	Match0 triggers to State1..... Match1 triggers to State3..... Other matches have no effect
0111	Match1 triggers to State3..... Match0 triggers Final State..... Other matches have no effect
1000	Match0 triggers to State1..... Match2 triggers to State3..... Other matches have no effect
1001	Match2 triggers to State3..... Match0 triggers Final State..... Other matches have no effect
1010	Match1 triggers to State1..... Match3 triggers to State3..... Other matches have no effect
1011	Match3 triggers to State3..... Match1 triggers Final State..... Other matches have no effect
1100	Match2 triggers to State1..... Match3 trigger to Final State
1101	Match2 has no affect, all other matches (M0,M1,M3) trigger to Final State
1110	Reserved
1111	Reserved

The trigger priorities described in Table 20-38 dictate that in the case of simultaneous matches, the match on the lower channel number (0,1,2,3) has priority. The SC[3:0] encoding ensures that a match leading to final state has priority over all other matches.

20.3.2.7.3 Debug State Control Register 3 (DBGSCR3)

Address: 0x0027

	7	6	5	4	3	2	1	0
R	0	0	0	0	SC3	SC2	SC1	SC0
W								
Reset	0	0	0	0	0	0	0	0

= Unimplemented or Reserved

Figure 20-11. Debug State Control Register 3 (DBGSCR3)

Read: Anytime

Write: Anytime when S12XDBG not armed.

This register is visible at 0x0027 only with COMRV[1:0] = 10. The state control register three selects the targeted next state whilst in State3. The matches refer to the match channels of the comparator match control logic as depicted in Figure 20-1 and described in Section 20.3.2.8.1”. Comparators must be enabled by setting the comparator enable bit in the associated DBGXCTL control register.

Table 20-24. DBGSCR3 Field Descriptions

Field	Description
3–0 SC[3:0]	These bits select the targeted next state whilst in State3, based upon the match event.

Table 20-25. State3 — Sequencer Next State Selection

SC[3:0]	Description
0000	Any match triggers to state1
0001	Any match triggers to state2
0010	Any match triggers to Final State
0011	Match0 triggers to State1..... Other matches have no effect
0100	Match0 triggers to State2..... Other matches have no effect
0101	Match0 triggers to Final State.....Match1 triggers to State1
0110	Match1 triggers to State1..... Other matches have no effect
0111	Match1 triggers to State2..... Other matches have no effect
1000	Match1 triggers to Final State..... Other matches have no effect
1001	Match2 triggers to State2..... Match0 triggers to Final State..... Other matches have no effect
1010	Match1 triggers to State1..... Match3 triggers to State2..... Other matches have no effect
1011	Match3 triggers to State2..... Match1 triggers to Final State..... Other matches have no effect
1100	Match2 triggers to Final State..... Other matches have no effect
1101	Match3 triggers to Final State..... Other matches have no effect
1110	Reserved
1111	Reserved

The trigger priorities described in Table 20-38 dictate that in the case of simultaneous matches, the match on the lower channel number (0,1,2,3) has priority. The SC[3:0] encoding ensures that a match leading to final state has priority over all other matches.

20.3.2.7.4 Debug Match Flag Register (DBGMFR)

Address: 0x0027

	7	6	5	4	3	2	1	0
R	0	0	0	0	MC3	MC2	MC1	MC0
W								
Reset	0	0	0	0	0	0	0	0

= Unimplemented or Reserved

Figure 20-12. Debug Match Flag Register (DBGMFR)

Read: Anytime

Write: Never

DBGMFR is visible at 0x0027 only with COMRV[1:0] = 11. It features four flag bits each mapped directly to a channel. Should a match occur on the channel during the debug session, then the corresponding flag is set and remains set until the next time the module is armed by writing to the ARM bit. Thus the contents are retained after a debug session for evaluation purposes. These flags cannot be cleared by software, they are cleared only when arming the module. A set flag does not inhibit the setting of other flags. Once a flag is set, further triggers on the same channel have no affect.

20.3.2.8 Comparator Register Descriptions

Each comparator has a bank of registers that are visible through an 8-byte window in the S12XDBG module register address map. Comparators A and C consist of 8 register bytes (3 address bus compare registers, two data bus compare registers, two data bus mask registers and a control register).

Comparators B and D consist of four register bytes (three address bus compare registers and a control register).

Each set of comparator registers is accessible in the same 8-byte window of the register address map and can be accessed using the COMRV bits in the DBGC1 register. If the Comparators B or D are accessed through the 8-byte window, then only the address and control bytes are visible, the 4 bytes associated with data bus and data bus masking read as zero and cannot be written. Furthermore the control registers for comparators B and D differ from those of comparators A and C.

Table 20-26. Comparator Register Layout

0x0028	CONTROL	Read/Write	—
0x0029	ADDRESS HIGH	Read/Write	—
0x002A	ADDRESS MEDIUM	Read/Write	—
0x002B	ADDRESS LOW	Read/Write	—
0x002C	DATA HIGH COMPARATOR	Read/Write	Comparator A and C only
0x002D	DATA LOW COMPARATOR	Read/Write	Comparator A and C only
0x002E	DATA HIGH MASK	Read/Write	Comparator A and C only
0x002F	DATA LOW MASK	Read/Write	Comparator A and C only

20.3.2.8.1 Debug Comparator Control Register (DBGXCTL)

The contents of this register bits 7 and 6 differ depending upon which comparator registers are visible in the 8-byte window of the DBG module register address map.

Address: 0x0028

	7	6	5	4	3	2	1	0
R	0	NDB	TAG	BRK	RW	RWE	SRC	COMPE
W								
Reset	0	0	0	0	0	0	0	0

= Unimplemented or Reserved

Figure 20-13. Debug Comparator Control Register (Comparators A and C)

Address: 0x0028

	7	6	5	4	3	2	1	0
R	SZE	SZ	TAG	BRK	RW	RWE	SRC	COMPE
W								
Reset	0	0	0	0	0	0	0	0

Figure 20-14. Debug Comparator Control Register (Comparators B and D)

Read: Anytime

Write: Anytime when S12XDBG not armed.

Table 20-27. DBGXCTL Field Descriptions

Field	Description
7 SZE (Comparators B nd D)	**Size Comparator Enable Bit** — The SZE bit controls whether access size comparison is enabled for the associated comparator. This bit is ignored if the TAG bit in the same register is set. 0 Word/Byte access size is not used in comparison 1 Word/Byte access size is used in comparison
6 NDB (Comparators A and C	**Not Data Bus Compare** — The NDB bit controls whether the match occurs when the data bus matches the comparator register value or when the data bus differs from the register value. Furthermore data bus bits can be individually masked using the comparator data mask registers. This bit is only available for comparators A and C. This bit is ignored if the TAG bit in the same register is set. This bit position has an SZ functionality for comparators B and D. 0 Match on data bus equivalence to comparator register contents 1 Match on data bus difference to comparator register contents
6 SZ (Comparators B and D)	**Size Comparator Value Bit** — The SZ bit selects either word or byte access size in comparison for the associated comparator. This bit is ignored if the SZE bit is cleared or if the TAG bit in the same register is set. This bit position has NDB functionality for comparators A and C 0 Word access size will be compared 1 Byte access size will be compared
5 TAG	**Tag Select** — This bit controls whether the comparator match will cause a trigger or tag the opcode at the matched address. Tagged opcodes trigger only if they reach the execution stage of the instruction queue. 0 Trigger immediately on match 1 On match, tag the opcode. If the opcode is about to be executed a trigger is generated

Table 20-27. DBGXCTL Field Descriptions (continued)

Field	Description
4 BRK	**Break** — This bit controls whether a comparator match terminates a debug session immediately, independent of state sequencer state. To generate an immediate breakpoint the module breakpoints must be enabled using the DBGC1 bits DBGBRK[1:0]. 0 The debug session termination is dependent upon the state sequencer and trigger conditions. 1 A match on this channel terminates the debug session immediately; breakpoints if active are generated, tracing, if active, is terminated and the module disarmed.
3 RW	**Read/Write Comparator Value Bit** — The RW bit controls whether read or write is used in compare for the associated comparator. The RW bit is not used if RWE = 0. 0 Write cycle will be matched 1 Read cycle will be matched
2 RWE	**Read/Write Enable Bit** — The RWE bit controls whether read or write comparison is enabled for the associated comparator. This bit is not useful for tagged operations. 0 Read/Write is not used in comparison 1 Read/Write is used in comparison
1 SRC	Determines mapping of comparator to S12XCPU or XGATE 0 The comparator is mapped to S12XCPU buses 1 The comparator is mapped to XGATE address and data buses
0 COMPE	Determines if comparator is enabled 0 The comparator is not enabled 1 The comparator is enabled for state sequence triggers or tag generation

Table 20-28 shows the effect for RWE and RW on the comparison conditions. These bits are not useful for tagged operations since the trigger occurs based on the tagged opcode reaching the execution stage of the instruction queue. Thus these bits are ignored if tagged triggering is selected.

Table 20-28. Read or Write Comparison Logic Table

RWE Bit	RW Bit	RW Signal	Comment
0	x	0	RW not used in comparison
0	x	1	RW not used in comparison
1	0	0	Write data bus
1	0	1	No match
1	1	0	No match
1	1	1	Read data bus

20.3.2.8.2 Debug Comparator Address High Register (DBGXAH)

Address: 0x0029

	7	6	5	4	3	2	1	0
R W	0	Bit 22	Bit 21	Bit 20	Bit 19	Bit 18	Bit 17	Bit 16
Reset	0	0	0	0	0	0	0	0

= Unimplemented or Reserved

Figure 20-15. Debug Comparator Address High Register (DBGXAH)

Read: Anytime

Write: Anytime when S12XDBG not armed.

Table 20-29. DBGXAH Field Descriptions

Field	Description
6–0 Bit[22:16]	**Comparator Address High Compare Bits** — The Comparator address high compare bits control whether the selected comparator will compare the address bus bits [22:16] to a logic one or logic zero. This register byte is ignored for XGATE compares. 0 Compare corresponding address bit to a logic zero 1 Compare corresponding address bit to a logic one

20.3.2.8.3 Debug Comparator Address Mid Register (DBGXAM)

Address: 0x002A

	7	6	5	4	3	2	1	0
R W	Bit 15	Bit 14	Bit 13	Bit 12	Bit 11	Bit 10	Bit 9	Bit 8
Reset	0	0	0	0	0	0	0	0

Figure 20-16. Debug Comparator Address Mid Register (DBGXAM)

Read: Anytime

Write: Anytime when S12XDBG not armed.

Table 20-30. DBGXAM Field Descriptions

Field	Description
7–0 Bit[15:8]	**Comparator Address Mid Compare Bits** — The Comparator address mid compare bits control whether the selected comparator will compare the address bus bits [15:8] to a logic one or logic zero. 0 Compare corresponding address bit to a logic zero 1 Compare corresponding address bit to a logic one

20.3.2.8.4 Debug Comparator Address Low Register (DBGXAL)

Address: 0x002B

	7	6	5	4	3	2	1	0
R W	Bit 7	Bit 6	Bit 5	Bit 4	Bit 3	Bit 2	Bit 1	Bit 0
Reset	0	0	0	0	0	0	0	0

Figure 20-17. Debug Comparator Address Low Register (DBGXAL)

Read: Anytime

Write: Anytime when S12XDBG not armed.

Table 20-31. DBGXAL Field Descriptions

Field	Description
7–0 Bits[7:0]	**Comparator Address Low Compare Bits** — The Comparator address low compare bits control whether the selected comparator will compare the address bus bits [7:0] to a logic one or logic zero. 0 Compare corresponding address bit to a logic zero 1 Compare corresponding address bit to a logic one

20.3.2.8.5 Debug Comparator Data High Register (DBGXDH)

Address: 0x002C

	7	6	5	4	3	2	1	0
R W	Bit 15	Bit 14	Bit 13	Bit 12	Bit 11	Bit 10	Bit 9	Bit 8
Reset	0	0	0	0	0	0	0	0

Figure 20-18. Debug Comparator Data High Register (DBGXDH)

Read: Anytime

Write: Anytime when S12XDBG not armed.

Table 20-32. DBGXAH Field Descriptions

Field	Description
7–0 Bits[15:8]	**Comparator Data High Compare Bits** — The Comparator data high compare bits control whether the selected comparator compares the data bus bits [15:8] to a logic one or logic zero. The comparator data compare bits are only used in comparison if the corresponding data mask bit is logic 1. This register is available only for comparators A and C. 0 Compare corresponding data bit to a logic zero 1 Compare corresponding data bit to a logic one

20.3.2.8.6 Debug Comparator Data Low Register (DBGXDL)

Address: 0x002D

	7	6	5	4	3	2	1	0
R W	Bit 7	Bit 6	Bit 5	Bit 4	Bit 3	Bit 2	Bit 1	Bit 0
Reset	0	0	0	0	0	0	0	0

Figure 20-19. Debug Comparator Data Low Register (DBGXDL)

Read: Anytime

Write: Anytime when S12XDBG not armed.

Table 20-33. DBGXDL Field Descriptions

Field	Description
7–0 Bits[7:0]	**Comparator Data Low Compare Bits** — The Comparator data low compare bits control whether the selected comparator compares the data bus bits [7:0] to a logic one or logic zero. The comparator data compare bits are only used in comparison if the corresponding data mask bit is logic 1. This register is available only for comparators A and C. 0 Compare corresponding data bit to a logic zero 1 Compare corresponding data bit to a logic one

20.3.2.8.7 Debug Comparator Data High Mask Register (DBGXDHM)

Address: 0x002E

	7	6	5	4	3	2	1	0
R W	Bit 15	Bit 14	Bit 13	Bit 12	Bit 11	Bit 10	Bit 9	Bit 8
Reset	0	0	0	0	0	0	0	0

Figure 20-20. Debug Comparator Data High Mask Register (DBGXDHM)

Read: Anytime

Write: Anytime when S12XDBG not armed.

Table 20-34. DBGXDHM Field Descriptions

Field	Description
7–0 Bits[15:8]	**Comparator Data High Mask Bits** — The Comparator data high mask bits control whether the selected comparator compares the data bus bits [15:8] to the corresponding comparator data compare bits. This register is available only for comparators A and C. 0 Do not compare corresponding data bit 1 Compare corresponding data bit

20.3.2.8.8 Debug Comparator Data Low Mask Register (DBGXDLM)

Address: 0x002F

	7	6	5	4	3	2	1	0
R W	Bit 7	Bit 6	Bit 5	Bit 4	Bit 3	Bit 2	Bit 1	Bit 0
Reset	0	0	0	0	0	0	0	0

Figure 20-21. Debug Comparator Data Low Mask Register (DBGXDLM)

Read: Anytime

Write: Anytime when S12XDBG not armed.

Table 20-35. DBGXDLM Field Descriptions

Field	Description
7–0 Bits[7:0]	**Comparator Data Low Mask Bits** — The Comparator data low mask bits control whether the selected comparator compares the data bus bits [7:0] to the corresponding comparator data compare bits. This register is available only for comparators A and C. 0 Do not compare corresponding data bit 1 Compare corresponding data bit

20.4 Functional Description

This section provides a complete functional description of the S12XDBG module. If the part is in secure mode, the S12XDBG module can generate breakpoints but tracing is not possible.

20.4.1 S12XDBG Operation

Arming the S12XDBG module by setting ARM in DBGC1 allows triggering, and storing of data in the trace buffer and can be used to cause breakpoints to the S12XCPU or the XGATE module. The DBG module is made up of four main blocks, the comparators, control logic, the state sequencer, and the trace buffer.

The comparators monitor the bus activity of the S12XCPU and XGATE modules. Comparators can be configured to monitor address and databus. Comparators can also be configured to mask out individual data bus bits during a compare and to use R/W and word/byte access qualification in the comparison. When a match with a comparator register value occurs the associated control logic can trigger the state sequencer to another state (see Figure 20-23). Either forced or tagged triggers are possible. Using a forced trigger, the trigger is generated immediately on a comparator match. Using a tagged trigger, at a comparator match, the instruction opcode is tagged and only if the instruction reaches the execution stage of the instruction queue is a trigger generated. In the case of a transition to Final State, bus tracing is triggered and/or a breakpoint can be generated. Tracing of both S12XCPU and/or XGATE bus activity is possible.

Independent of the state sequencer, a breakpoint can be triggered by the external $\overline{\text{TAGHI}}$ / $\overline{\text{TAGLO}}$ signals, by an XGATE S/W breakpoint request or by writing to the TRIG bit in the DBGC1 control register.

The trace buffer is visible through a 2-byte window in the register address map and can be read out using standard 16-bit word reads.

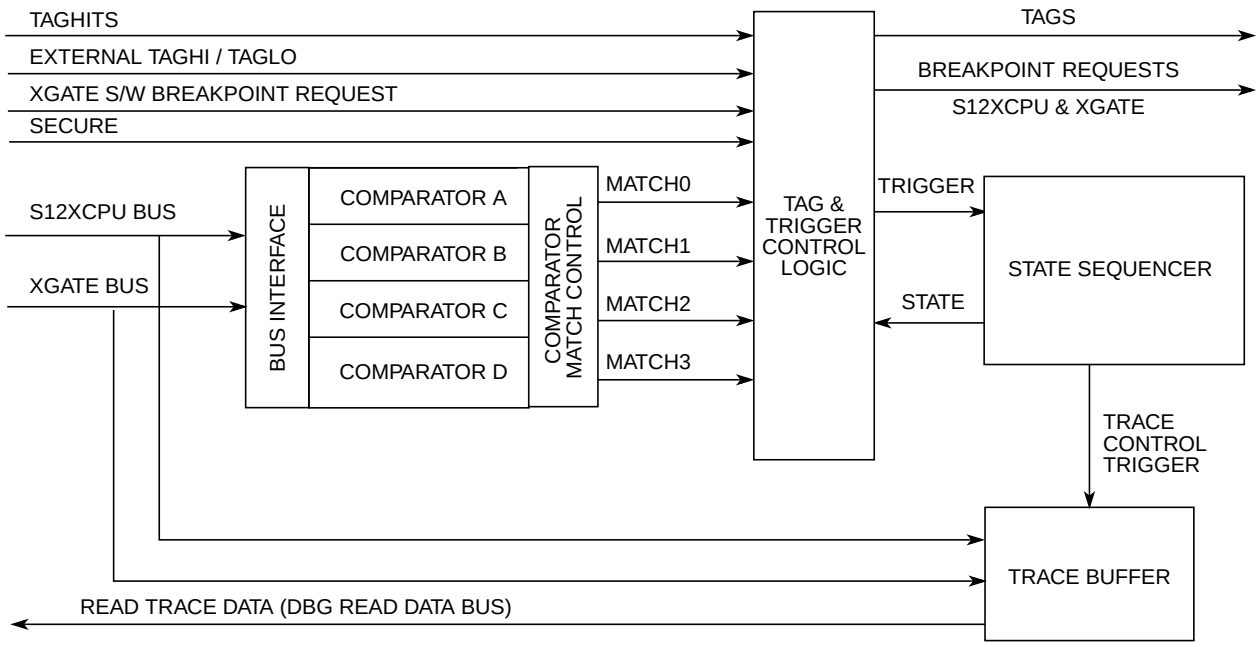

Figure 20-22. S12XDBG Overview

20.4.2 Comparator Modes

The S12XDBG contains four comparators, A, B, C, and D. Each comparator can be configured to monitor either S12XCPU or XGATE buses using the SRC bit in the corresponding comparator control register. Each comparator compares the selected address bus with the address stored in DBGXAH, DBGXAM, and DBGXAL. Furthermore, comparators A and C also compare the data buses to the data stored in DBGXDH, DBGXDL and allow masking of individual data bus bits.

All comparators are disabled in BDM and during BDM accesses.

The comparator match control logic (see Figure 20-22) configures comparators to monitor the buses for an exact address or an address range, whereby either an access inside or outside the specified range generates a match condition. The comparator configuration is controlled by the control register contents and the range control by the DBGC2 contents.

On a match a trigger can initiate a transition to another state sequencer state (see Section 20.4.3”). The comparator control register also allows the type of access to be included in the comparison through the use of the RWE, RW, SZE, and SZ bits. The RWE bit controls whether read or write comparison is enabled for the associated comparator and the RW bit selects either a read or write access for a valid match. Similarly the SZE and SZ bits allows the size of access (word or byte) to be considered in the compare. Only comparators B and D feature SZE and SZ.

The TAG bit in each comparator control register is used to determine the triggering condition. By setting TAG, the comparator will qualify a match with the output of opcode tracking logic and a trigger occurs

before the tagged instruction executes (tagged-type trigger). Whilst tagging the RW, RWE, SZE, and SZ bits are ignored and the comparator register must be loaded with the exact opcode address.

If the TAG bit is clear (forced type trigger) a comparator match is generated when the selected address appears on the system address bus. If the selected address is an opcode address, the match is generated when the opcode is fetched from the memory. This precedes the instruction execution by an indefinite number of cycles due to instruction pipe lining. For a comparator match of an opcode at an odd address when TAG = 0, the corresponding even address must be contained in the comparator register. Thus for an opcode at odd address (n), the comparator register must contain address (n–1).

Once a successful comparator match has occurred, the condition that caused the original match is not verified again on subsequent matches. Thus if a particular data value is verified at a given address, this address may not still contain that data value when a subsequent match occurs.

Comparators C and D can also be used to select an address range to trace from. This is determined by the TRANGE bits in the DBGTCR register. The TRANGE encoding is shown in Table 20-10. If the TRANGE bits select a range definition using comparator D, then comparator D is configured for trace range definition and cannot be used for address bus comparisons. Similarly if the TRANGE bits select a range definition using comparator C, then comparator C is configured for trace range definition and cannot be used for address bus comparisons.

Match[0, 1, 2, 3] map directly to Comparators[A, B, C, D] respectively, except in range modes (see Section 20.3.2.4”). Comparator priority rules are described in the trigger priority section (Section 20.4.3.6”).

20.4.2.1 Exact Address Comparator Match (Comparators A and C)

With range comparisons disabled, the match condition is an exact equivalence of address/data bus with the value stored in the comparator address/data registers. Further qualification of the type of access (R/W, word/byte) is possible.

Comparators A and C do not feature SZE or SZ control bits, thus the access size is not compared. The exact address is compared, thus with the comparator address register loaded with address (n) a misaligned word access of address (n–1) also accesses (n) but does not cause a match. Table 20-37 lists access considerations without data bus compare. Table 20-36 lists access considerations with data bus comparison. To compare byte accesses DBGXDH must be loaded with the data byte. The low byte must be masked out using the DBGXDLM mask register. On word accesses the data byte of the lower address is mapped to DBGXDH.

Table 20-36. Comparator A and C Data Bus Considerations

Access	Address	DBGxDH	DBGxDL	DBGxDHM	DBGxDLM	Example Valid Match
Word	ADDR[n]	Data[n]	Data[n+1]	$FF	$FF	MOVW #$WORD ADDR[n]
Byte	ADDR[n]	Data[n]	x	$FF	$00	MOVB #$BYTE ADDR[n]
Word	ADDR[n]	Data[n]	x	$FF	$00	MOVW #$WORD ADDR[n]
Word	ADDR[n]	x	Data[n+1]	$00	$FF	MOVW #$WORD ADDR[n]

Comparators A and C feature an NDB control bit to determine if a match occurs when the data bus differs to comparator register contents or when the data bus is equivalent to the comparator register contents.

20.4.2.2 Exact Address Comparator Match (Comparators B and D)

Comparators B and D feature SZ and SZE control bits. If SZE is clear, then the comparator address match qualification functions the same as for comparators A and C.

If the SZE bit is set the access size (word or byte) is compared with the SZ bit value such that only the specified type of access causes a match. Thus if configured for a byte access of a particular address, a word access covering the same address does not lead to match.

Table 20-37. Comparator Access Size Considerations

Comparator	Address	SZE	SZ8	Condition For Valid Match
Comparators A and C	ADDR[n]	—	—	Word and byte accesses of ADDR[n][1] MOVB #$BYTE ADDR[n] MOVW #$WORD ADDR[n]
Comparators B and D	ADDR[n]	0	X	Word and byte accesses of ADDR[n][1] MOVB #$BYTE ADDR[n] MOVW #$WORD ADDR[n]
Comparators B and D	ADDR[n]	1	0	Word accesses of ADDR[n][1] MOVW #$WORD ADDR[n]
Comparators B and D	ADDR[n]	1	1	Byte accesses of ADDR[n] MOVB #$BYTE ADDR[n]

[1] A word access of ADDR[n-1] also accesses ADDR[n] but does not generate a match.
The comparator address register must contain the exact address used in the code.

20.4.2.3 Range Comparisons

When using the AB comparator pair for a range comparison, the data bus can also be used for qualification by using the comparator A data and data mask registers. Furthermore the DBGACTL RW and RWE bits can be used to qualify the range comparison on either a read or a write access. The corresponding DBGBCTL bits are ignored. Similarly when using the CD comparator pair for a range comparison, the data bus can also be used for qualification by using the comparator C data and data mask registers. Furthermore the DBGCCTL RW and RWE bits can be used to qualify the range comparison on either a read or a write access if tagging is not selected. The corresponding DBGDCTL bits are ignored. The SZE and SZ control bits are ignored in range mode. The comparator A and C TAG bits are used to tag range comparisons for the AB and CD ranges respectively. The comparator B and D TAG bits are ignored in range modes. In order for a range comparison using comparators A and B, both COMPEA and COMPEB must be set; to disable range comparisons both must be cleared. Similarly for a range CD comparison, both COMPEC and COMPED must be set. If a range mode is selected SRCA and SRCC select the source (S12X or XGATE), SRCB and SRCD are ignored. When configured for range comparisons and tagging, the ranges are accurate only to word boundaries.

20.4.2.3.1 Inside Range (CompAC_Addr ≤ address ≤ CompBD_Addr)

In the Inside Range comparator mode, either comparator pair A and B or comparator pair C and D can be configured for range comparisons. This configuration depends upon the control register (DBGC2). The

match condition requires that a valid match for both comparators happens on the same bus cycle. A match condition on only one comparator is not valid. An aligned word access which straddles the range boundary will cause a trigger only if the aligned address is inside the range.

20.4.2.3.2 Outside Range (address < CompAC_Addr or address > CompBD_Addr)

In the Outside Range comparator mode, either comparator pair A and B or comparator pair C and D can be configured for range comparisons. A single match condition on either of the comparators is recognized as valid. An aligned word access which straddles the range boundary will cause a trigger only if the aligned address is outside the range.

Outside range mode in combination with tagged triggers can be used to detect if the opcode fetches are from an unexpected range. In forced trigger modes the outside range trigger would typically be activated at any interrupt vector fetch or register access. This can be avoided by setting the upper range limit to $7FFFFF or lower range limit to $000000 respectively.

When comparing the XGATE address bus in outside range mode, the initial vector fetch as determined by the vector contained in the XGATE XGVBR register should be taken into consideration. The XGVBR register and hence vector address can be modified.

20.4.3 Trigger Modes

Trigger modes are used as qualifiers for a state sequencer change of state. The control logic determines the trigger mode and provides a trigger to the state sequencer. The individual trigger modes are described in the following sections.

20.4.3.1 Forced Trigger On Comparator Match

If a forced trigger comparator match occurs, the trigger immediately initiates a transition to the next state sequencer state whereby the corresponding flags in DBGSR are set. The state control register for the current state determines the next state for each trigger. Forced triggers are generated as soon as the matching address appears on the address bus, which in the case of opcode fetches occurs several cycles before the opcode execution. For this reason a forced trigger of an opcode address precedes a tagged trigger at the same address by several cycles.

20.4.3.2 Trigger On Comparator Related Taghit

If either a S12XCPU or XGATE taghit occurs a transition to another state sequencer state is initiated and the corresponding DBGSR flags are set. For a comparator related taghit to occur, the S12XDBG must first generate tags based on comparator matches. When the tagged instruction reaches the execution stage of the instruction queue a taghit is generated by the S12XCPU/XGATE. The state control register for the current state determines the next state for each trigger.

20.4.3.3 External Tagging Trigger

In external tagging trigger mode, the $\overline{\text{TAGLO}}$ and $\overline{\text{TAGHI}}$ pins (mapped to device pins) are used to tag an instruction. This function can be used as another breakpoint source. When the tagged opcode reaches the

execution stage of the instruction queue a transition to the disarmed state0 occurs, ending the debug session and generating a breakpoint, if breakpoints are enabled. External tagging is only possible in device emulation modes.

20.4.3.4 Trigger On XGATE S/W Breakpoint Request

The XGATE S/W breakpoint request issues a forced breakpoint request to the S12XCPU immediately independent of S12XDBG settings and triggers the state sequencer into the disarmed state. Active tracing sessions are terminated immediately, thus if tracing has not yet begun, no trace information is stored. XGATE generated breakpoints are independent of the DBGBRK bits. The XGSBPE bit in DBGC1 determines if the XGATE S/W breakpoint function is enabled. The BDM bit in DBGC1 determines if the XGATE requested breakpoint causes the system to enter BDM Mode or initiate a software interrupt (SWI).

20.4.3.5 Immediate Trigger

Independent of comparator matches or external tag signals it is possible to initiate a tracing session and/or breakpoint by writing to the TRIG bit in DBGC1. This triggers the state sequencer into the Final State and issues a forced breakpoint request to both S12XCPU and XGATE.

20.4.3.6 Trigger Priorities

In case of simultaneous triggers, the priority is resolved according to Table 20-38. The lower priority trigger is suppressed. It is thus possible to miss a lower priority trigger if it occurs simultaneously with a trigger of a higher priority. The trigger priorities described in Table 20-38 dictate that in the case of simultaneous matches, the match on the lower channel number (0,1,2,3) has priority. The SC[3:0] encoding ensures that a match leading to final state has priority over all other matches independent of current state sequencer state. When configured for range modes a simultaneous match of comparators A and C generates an active match0 whilst match2 is suppressed.

Table 20-38. Trigger Priorities

Priority	Source	Action
Highest	**XGATE**	Immediate forced breakpoint.....(Tracing terminated immediately).
	TRIG	Enter Final State
	External TAGHI/TAGLO	Enter State0
	Match0 (force or tag hit)	Trigger to next state as defined by state control registers
	Match1 (force or tag hit)	Trigger to next state as defined by state control registers
	Match2 (force or tag hit)	Trigger to next state as defined by state control registers
Lowest	**Match3 (force or tag hit)**	Trigger to next state as defined by state control registers

20.4.4 State Sequence Control

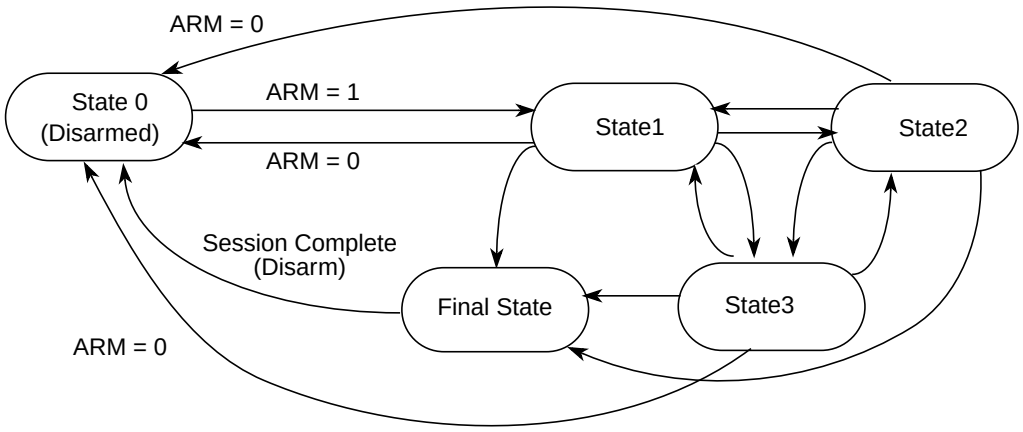

Figure 20-23. State Sequencer Diagram

The state sequencer allows a defined sequence of events to provide a trigger point for tracing of data in the trace buffer. Once the S12XDBG module has been armed by setting the ARM bit in the DBGC1 register, then state1 of the state sequencer is entered. Further transitions between the states are then controlled by the state control registers and depend upon a selected trigger mode condition being met. From Final State the only permitted transition is back to the disarmed state0. Transition between any of the states 1 to 3 is not restricted. Each transition updates the SSF[2:0] flags in DBGSR accordingly to indicate the current state.

Alternatively writing to the TRIG bit in DBGSC1, the Final State is entered and tracing starts immediately if the TSOURCE bits are configured for tracing.

A tag hit through $\overline{\text{TAGHI}}/\overline{\text{TAGLO}}$ brings the state sequencer immediately into state0, causes a breakpoint, if breakpoints are enabled, and ends tracing immediately independent of the trigger alignment bits TALIGN[1:0].

Independent of the state sequencer, each comparator channel can be individually configured to generate an immediate breakpoint when a match occurs through the use of the BRK bits in the DBGxCTL registers. Thus it is possible to generate an immediate breakpoint on selected channels, whilst a state sequencer transition can be initiated by a match on other channels. If a debug session is ended by a trigger on a channel with BRK = 1, the state sequencer transitions through Final State for a clock cycle to state0. This is independent of tracing and breakpoint activity, thus with tracing and breakpoints disabled, the state sequencer enters state0 and the debug module is disarmed.

An XGATE S/W breakpoint request, if enabled causes a transition to the State0 and generates a breakpoint request to the S12XCPU immediately.

20.4.4.1 Final State

On entering Final State a trigger may be issued to the trace buffer according to the trace position control as defined by the TALIGN field (see Section 20.3.2.3”). If the TSOURCE bits in the trace control register DBGTCR are cleared then the trace buffer is disabled and the transition to Final State can only generate a breakpoint request. In this case or upon completion of a tracing session when tracing is enabled, the ARM

bit in the DBGC1 register is cleared, returning the module to the disarmed state0. If tracing is enabled a breakpoint request can occur at the end of the tracing session. If neither tracing nor breakpoints are enabled then when the final state is reached it returns automatically to state0 and the debug module is disarmed.

20.4.5 Trace Buffer Operation

The trace buffer is a 64 lines deep by 64-bits wide RAM array. The S12XDBG module stores trace information in the RAM array in a circular buffer format. The S12XCPU accesses the RAM array through a register window (DBGTBH:DBGTBL) using 16-bit wide word accesses. After each complete 64-bit trace buffer line is read via the S12XCPU, an internal pointer into the RAM is incremented so that the next read will receive fresh information. Data is stored in the format shown in Table 20-39. After each store the counter register bits DBGCNT[6:0] are incremented. Tracing of S12XCPU activity is disabled when the BDM is active but tracing of XGATE activity is still possible. Reading the trace buffer whilst the BDM is active returns invalid data and the trace buffer pointer is not incremented.

20.4.5.1 Trace Trigger Alignment

Using the TALIGN bits (see Section 20.3.2.3”) it is possible to align the trigger with the end, the middle, or the beginning of a tracing session.

If End or Mid tracing is selected, tracing begins when the ARM bit in DBGC1 is set and State1 is entered. The transition to Final State if End is selected signals the end of the tracing session. The transition to Final State if Mid is selected signals that another 32 lines will be traced before ending the tracing session. Tracing with Begin-Trigger starts at the opcode of the trigger. Using End or Mid-Trigger or when the tracing is initiated by writing to the TRIG bit whilst configured for Begin-Trigger, tracing starts at the second opcode after writing to DBGC1 if written in the CPU thread, .

20.4.5.1.1 Storing with Begin-Trigger

Storing with Begin-Trigger, data is not stored in the Trace Buffer until the Final State is entered. Once the trigger condition is met the S12XDBG module will remain armed until 64 lines are stored in the Trace Buffer. If the trigger is at the address of the change-of-flow instruction the change of flow associated with the trigger will be stored in the Trace Buffer. Using Begin-trigger together with tagging, if the tagged instruction is about to be executed then the trace is started. Upon completion of the tracing session the breakpoint is generated, thus the breakpoint does not occur at the tagged instruction boundary.

20.4.5.1.2 Storing with Mid-Trigger

Storing with Mid-Trigger, data is stored in the Trace Buffer as soon as the S12XDBG module is armed. When the trigger condition is met, another 32 lines will be traced before ending the tracing session, irrespective of the number of lines stored before the trigger occurred, then the S12XDBG module is disarmed and no more data is stored. If the trigger is at the address of a change of flow instruction the trigger event is not stored in the Trace Buffer. Using Mid-trigger with tagging, if the tagged instruction is about to be executed then the trace is continued for another 32 lines. Upon tracing completion the breakpoint is generated, thus the breakpoint does not occur at the tagged instruction boundary.

20.4.5.1.3 Storing with End-Trigger

Storing with End-Trigger, data is stored in the Trace Buffer until the Final State is entered, at which point the S12XDBG module will become disarmed and no more data will be stored. If the trigger is at the address of a change of flow instruction the trigger event will not be stored in the Trace Buffer.

20.4.5.2 Trace Modes

The S12XDBG module can operate in four trace modes. The mode is selected using the TRCMOD bits in the DBGTCR register. In each mode tracing of XGATE or S12XCPU information is possible. The source for the trace is selected using the TSOURCE bits in the DBGTCR register. The modes are described in the following subsections. The trace buffer organization is shown in Table 20-39.

20.4.5.2.1 Normal Mode

In Normal Mode, change of flow (COF) program counter (PC) addresses will be stored.

COF addresses are defined as follows for the S12XCPU:

- Source address of taken conditional branches (long, short, bit-conditional, and loop primitives)
- Destination address of indexed JMP, JSR, and CALL instruction.
- Destination address of RTI, RTS, and RTC instructions
- Vector address of interrupts, except for SWI and BDM vectors

LBRA, BRA, BSR, BGND as well as non-indexed JMP, JSR, and CALL instructions are not classified as change of flow and are not stored in the trace buffer.

COF addresses are defined as follows for the XGATE:

- Source address of taken conditional branches
- Destination address of indexed JAL instructions.
- First XGATE code address in a thread

Change-of-flow addresses stored include the full 23-bit address bus in the case of S12XCPU, the 16-bit address bus for the XGATE module and an information byte, which contains a source/destination bit to indicate whether the stored address was a source address or destination address.

20.4.5.2.2 Loop1 Mode

Loop1 Mode, similarly to Normal Mode also stores only COF address information to the trace buffer, it however allows the filtering out of redundant information.

The intent of Loop1 Mode is to prevent the Trace Buffer from being filled entirely with duplicate information from a looping construct such as delays using the DBNE instruction or polling loops using BRSET/BRCLR instructions. Immediately after address information is placed in the Trace Buffer, the S12XDBG module writes this value into a background register. This prevents consecutive duplicate address entries in the Trace Buffer resulting from repeated branches.

Loop1 Mode only inhibits consecutive duplicate source address entries that would typically be stored in most tight looping constructs. It does not inhibit repeated entries of destination addresses or vector addresses, since repeated entries of these would most likely indicate a bug in the user's code that the S12XDBG module is designed to help find.

NOTE

In certain very tight loops, the source address will have already been fetched again before the background comparator is updated. This results in the source address being stored twice before further duplicate entries are suppressed. This condition occurs with branch-on-bit instructions when the branch is fetched by the first P-cycle of the branch or with loop-construct instructions in which the branch is fetched with the first or second P cycle. See examples below:

```
LOOP     INX                            ; 1-byte instruction fetched by 1st P-cycle of BRCLR
         BRCLR      CMPTMP,#$0c, LOOP   ; the BRCLR instruction also will be fetched by 1st
                                        ; P-cycle of BRCLR

LOOP2    BRN     *                      ; 2-byte instruction fetched by 1st P-cycle of DBNE
         NOP                            ; 1-byte instruction fetched by 2nd P-cycle of DBNE
         DBNE       A,LOOP2             ; this instruction also fetched by 2nd P-cycle of DBNE
```

20.4.5.2.3 Detail Mode

In Detail Mode, address and data for all memory and register accesses is stored in the trace buffer. In the case of XGATE tracing this means that initialization of the R1 register during a vector fetch is not traced. This mode is intended to supply additional information on indexed, indirect addressing modes where storing only the destination address would not provide all information required for a user to determine where the code is in error. This mode also features information byte storage to the trace buffer, for each address byte storage. The information byte indicates the size of access (word or byte), the type of access (read or write).

When tracing S12XCPU activity in Detail Mode, all cycles are traced except those when the S12XCPU is either in a free or opcode fetch cycle. In this mode the XGATE program counter is also traced to provide a snapshot of the XGATE activity. CXINF information byte bits indicate the type of XGATE activity occurring at the time of the trace buffer entry. When tracing S12XCPU activity alone in Detail Mode, the address range can be limited to a range specified by the TRANGE bits in DBGTCR. This function uses comparators C and D to define an address range inside which S12XCPU activity should be traced (see Table 20-39). Thus the traced S12XCPU activity can be restricted to register range accesses.

When tracing XGATE activity in Detail Mode, all load and store cycles are traced. Additionally the S12XCPU program counter is stored at the time of the XGATE trace buffer entry to provide a snapshot of S12XCPU activity.

20.4.5.2.4 Pure PC Mode

In Pure PC Mode, tracing from the CPU the PC addresses of all executed opcodes are stored with the exception of WAI and STOP instructions.

In Pure PC Mode, tracing from the XGATE the PC addresses of all executed opcodes are stored.

20.4.5.3 Trace Buffer Organization

The buffer can be used to trace either from S12XCPU, from XGATE or from both sources. An X prefix denotes information from the XGATE module, a C prefix denotes information from the S12XCPU. ADRH, ADRM, ADRL denote address high, middle and low byte respectively. INF bytes contain control information (R/W, S/D etc.). The numerical suffix indicates which tracing step. The information format for Loop1 Mode is the same as that of Normal Mode. Whilst tracing from XGATE or S12XCPU only, in Normal or Loop1 modes each array line contains data from entries made at two separate times, thus in this case the DBGCNT[0] is incremented after each separate entry. In all other modes DBGCNT[0] remains cleared whilst the other DBGCNT bits are incremented on each trace buffer entry.

XGATE and S12XCPU COFs occur independently of each other and the profile of COFs for the two sources is totally different. When both sources are being traced in Normal or Loop1 mode, for each COF from one source, there may be many COFs from the other source, depending on user code. COF events could occur far from each other in the time domain, on consecutive cycles or simultaneously. When a COF occurs in either source (S12X or XGATE) a trace buffer entry is made and the corresponding CDV or XDV bit is set. The current PC of the other source is simultaneously stored to the trace buffer even if no COF has occurred, in which case CDV/XDV remains cleared indicating the address is not associated with a COF, but is simply a snapshot of the PC contents at the time of the COF from the other source.

Single byte data accesses in Detail Mode are always stored to the low byte of the trace buffer (CDATAL or XDATAL) and the high byte is cleared. When tracing word accesses, the byte at the lower address is always stored to trace buffer byte3 and the byte at the higher address is stored to byte2

Table 20-39. Trace Buffer Organization

Mode	8-Byte Wide Word Buffer							
	7	6	5	4	3	2	1	0
XGATE Detail	CXINF1	CADRH1	CADRM1	CADRL1	XDATAH1	XDATAL1	XADRM1	XADRL1
	CXINF2	CADRH2	CADRM2	CADRL2	XDATAH2	XDATAL2	XADRM2	XADRL2
S12XCPU Detail	CXINF1	CADRH1	CADRM1	CADRL1	CDATAH1	CDATAL1	XADRM1	XADRL1
	CXINF2	CADRH2	CADRM2	CADRL2	CDATAH2	CDATAL2	XADRM2	XADRL2
Both Other Modes	XINF0		XPCM0	XPCL0	CINF0	CPCH0	CPCM0	CPCL0
	XINF1		XPCM1	XPCL1	CINF1	CPCH1	CPCM1	CPCL1
XGATE Other Modes	XINF1		XPCM1	XPCL1	XINF0		XPCM0	XPCL0
	XINF3		XPCM3	XPCL3	XINF2		XPCM2	XPCL2
S12XCPU Other Modes	CINF1	CPCH1	CPCM1	CPCL1	CINF0	CPCH0	CPCM0	CPCL0
	CINF3	CPCH3	CPCM3	CPCL3	CINF2	CPCH2	CPCM2	CPCL2

20.4.5.3.1 Information Byte Organization

The format of the control information byte for both S12XCPU and XGATE modules is dependent upon the active trace mode and tracing source as described below. In Normal, Loop1, or Pure PC modes tracing of XGATE activity, XINF is used to store control information. In Normal, Loop1, or Pure PC modes tracing of S12XCPU activity, CINF is used to store control information. In Detail Mode, CXINF contains the control information

XGATE Information Byte

Bit 7	Bit 6	Bit 5	Bit 4	Bit 3	Bit 2	Bit 1	Bit 0
XSD	XSOT	XCOT	XDV	0	0	0	0

Figure 20-24. XGATE Information Byte XINF

Table 20-40. XINF Field Descriptions

Field	Description
7 XSD	**Source Destination Indicator** — This bit indicates if the corresponding stored address is a source or destination address. This is only used in Normal and Loop1 mode tracing. 0 Source Address 1 Destination Address or Start of Thread or Continuation of Thread
6 XSOT	**Source Of Thread Indicator** — This bit indicates that the corresponding stored address is a start of thread address. This is only used in Normal and Loop1 mode tracing. **NOTE. This bit only has effect on devices where the XGATE module supports multiple interrupt levels**. 0 Stored address not from a start of thread 1 Stored address from a start of thread
5 XCOT	**Continuation Of Thread Indicator** — This bit indicates that the corresponding stored address is the first address following a return from a higher priority thread. This is only used in Normal and Loop1 mode tracing. **NOTE. This bit only has effect on devices where the XGATE module supports multiple interrupt levels.** 0 Stored address not from a continuation of thread 1 Stored address from a continuation of thread
4 XDV	**Data Invalid Indicator** — This bit indicates if the trace buffer entry is invalid. It is only used when tracing from both sources in Normal, Loop1 and Pure PC modes, to indicate that the XGATE trace buffer entry is valid. 0 Trace buffer entry is invalid 1 Trace buffer entry is valid

X12X_CPU Information Byte

Bit 7	Bit 6	Bit 5	Bit 4	Bit 3	Bit 2	Bit 1	Bit 0
CSD	CVA	0	CDV	0	0	0	0

Figure 20-25. S12XCPU Information Byte CINF

Table 20-41. CINF Field Descriptions

Field	Description
7 CSD	**Source Destination Indicator** — This bit indicates if the corresponding stored address is a source or destination address. This is only used in Normal and Loop1 mode tracing. 0 Source Address 1 Destination Address
6 CVA	**Vector Indicator** — This bit indicates if the corresponding stored address is a vector address.. This is only used in Normal and Loop1 mode tracing. 0 Source Address 1 Destination Address
4 CDV	**Data Invalid Indicator** — This bit indicates if the trace buffer entry is invalid. It is only used when tracing from both sources in Normal, Loop1 and Pure PC modes, to indicate that the S12XCPU trace buffer entry is valid. 0 Trace buffer entry is invalid 1 Trace buffer entry is valid

CXINF Information Byte

Bit 7	Bit 6	Bit 5	Bit 4	Bit 3	Bit 2	Bit 1	Bit 0
CFREE	CSZ	CRW	COCF	XACK	XSZ	XRW	XOCF

Figure 20-26. Information Byte CXINF

This describes the format of the information byte used only when tracing from S12XCPU or XGATE in Detail Mode. When tracing from the S12XCPU in Detail Mode, information is stored to the trace buffer on all cycles except opcode fetch and free cycles. The XGATE entry stored on the same line is a snapshot of the XGATE program counter. In this case the CSZ and CRW bits indicate the type of access being made by the S12XCPU, whilst the XACK and XOCF bits indicate if the simultaneous XGATE cycle is a free cycle (no bus acknowledge) or opcode fetch cycle. Similarly when tracing from the XGATE in Detail Mode, information is stored to the trace buffer on all cycles except opcode fetch and free cycles. The S12XCPU entry stored on the same line is a snapshot of the S12XCPU program counter. In this case the XSZ and XRW bits indicate the type of access being made by the XGATE, whilst the CFREE and COCF bits indicate if the simultaneous S12XCPU cycle is a free cycle or opcode fetch cycle.

Table 20-42. CXINF Field Descriptions

Field	Description
7 CFREE	**S12XCPU Free Cycle Indicator** — This bit indicates if the stored S12XCPU address corresponds to a free cycle. This bit only contains valid information when tracing the XGATE accesses in Detail Mode. 0 Stored information corresponds to free cycle 1 Stored information does not correspond to free cycle
6 CSZ	**Access Type Indicator** — This bit indicates if the access was a byte or word size access.This bit only contains valid information when tracing S12XCPU activity in Detail Mode. 0 Word Access 1 Byte Access

Table 20-42. CXINF Field Descriptions (continued)

Field	Description
5 CRW	**Read Write Indicator** — This bit indicates if the corresponding stored address corresponds to a read or write access. This bit only contains valid information when tracing S12XCPU activity in Detail Mode. 0 Write Access 1 Read Access
4 COCF	**S12XCPU Opcode Fetch Indicator** — This bit indicates if the stored address corresponds to an opcode fetch cycle. This bit only contains valid information when tracing the XGATE accesses in Detail Mode. 0 Stored information does not correspond to opcode fetch cycle 1 Stored information corresponds to opcode fetch cycle
3 XACK	**XGATE Access Indicator** — This bit indicates if the stored XGATE address corresponds to a free cycle. This bit only contains valid information when tracing the S12XCPU accesses in Detail Mode. 0 Stored information corresponds to free cycle 1 Stored information does not correspond to free cycle
2 XSZ	**Access Type Indicator** — This bit indicates if the access was a byte or word size access. This bit only contains valid information when tracing XGATE activity in Detail Mode. 0 Word Access 1 Byte Access
1 XRW	**Read Write Indicator** — This bit indicates if the corresponding stored address corresponds to a read or write access. This bit only contains valid information when tracing XGATE activity in Detail Mode. 0 Write Access 1 Read Access
0 XOCF	**XGATE Opcode Fetch Indicator** — This bit indicates if the stored address corresponds to an opcode fetch cycle.This bit only contains valid information when tracing the S12XCPU accesses in Detail Mode. 0 Stored information does not correspond to opcode fetch cycle 1 Stored information corresponds to opcode fetch cycle

20.4.5.4 Reading Data from Trace Buffer

The data stored in the Trace Buffer can be read using either the background debug module (BDM) module or the S12XCPU provided the S12XDBG module is not armed, is configured for tracing (at least one TSOURCE bit is set) and the system not secured. When the ARM bit is written to 1 the trace buffer is locked to prevent reading. The trace buffer can only be unlocked for reading by a single aligned word write to DBGTB when the module is disarmed. Multiple writes to the DBGTB are not allowed since they increment the pointer.

The Trace Buffer can only be read through the DBGTB register using aligned word reads, any byte or misaligned reads return 0 and do not cause the trace buffer pointer to increment to the next trace buffer address. The Trace Buffer data is read out first-in first-out. By reading CNT in DBGCNT the number of valid 64-bit lines can be determined. DBGCNT will not decrement as data is read.

Whilst reading an internal pointer is used to determine the next line to be read. After a tracing session, the pointer points to the oldest data entry, thus if no overflow has occurred, the pointer points to line0, otherwise it points to the line with the oldest entry. The pointer is initialized by each aligned write to DBGTBH to point to the oldest data again. This enables an interrupted trace buffer read sequence to be easily restarted from the oldest data entry.

The least significant word of each 64-bit wide array line is read out first. This corresponds to the bytes 1 and 0 of Table 20-39. The bytes containing invalid information (shaded in Table 20-39) are also read out.

Reading the Trace Buffer while the S12XDBG module is armed will return invalid data and no shifting of the RAM pointer will occur. Reading the trace buffer is not possible if both TSOURCE bits are cleared.

20.4.5.5 Trace Buffer Reset State

The Trace Buffer contents are not initialized by a system reset. Thus should a system reset occur, the trace session information from immediately before the reset occurred can be read out. The DBGCNT bits are not cleared by a system reset. Thus should a reset occur, the number of valid lines in the trace buffer is indicated by DBGCNT. The internal pointer to the current trace buffer address is initialized by unlocking the trace buffer thus points to the oldest valid data even if a reset occurred during the tracing session. Generally debugging occurrences of system resets is best handled using mid or end trigger alignment since the reset may occur before the trace trigger, which in the begin trigger alignment case means no information would be stored in the trace buffer.

20.4.6 Tagging

A tag follows program information as it advances through the instruction queue. When a tagged instruction reaches the head of the queue a tag hit occurs and triggers the state sequencer.

Each comparator control register features a TAG bit, which controls whether the comparator match will cause a trigger immediately or tag the opcode at the matched address. If a comparator is enabled for tagged comparisons, the address stored in the comparator match address registers must be an opcode address for the trigger to occur.

Both S12XCPU and XGATE opcodes can be tagged with the comparator register TAG bits.

Using Begin trigger together with tagging, if the tagged instruction is about to be executed then the transition to the next state sequencer state occurs. If the transition is to the Final State, tracing is started. Only upon completion of the tracing session can a breakpoint be generated. Similarly using Mid trigger with tagging, if the tagged instruction is about to be executed then the trace is continued for another 32 lines. Upon tracing completion the breakpoint is generated. Using End trigger, when the tagged instruction is about to be executed and the next transition is to Final State then a breakpoint is generated immediately, before the tagged instruction is carried out.

R/W monitoring is not useful for tagged operations since the trigger occurs based on the tagged opcode reaching the execution stage of the instruction queue. Similarly access size (SZ) monitoring and data bus monitoring is not useful if tagged triggering is selected, since the tag is attached to the opcode at the matched address and is not dependent on the data bus nor on the size of access. Thus these bits are ignored if tagged triggering is selected.

When configured for range comparisons and tagging, the ranges are accurate only to word boundaries.

S12X tagging is disabled when the BDM becomes active. Conversely BDM firmware commands are not processed while tagging is active. XGATE tagging is possible when the BDM is active.

20.4.6.1 External Tagging using $\overline{\text{TAGHI}}$ and $\overline{\text{TAGLO}}$

External tagging using the external $\overline{\text{TAGHI}}$ and $\overline{\text{TAGLO}}$ pins can only be used to tag S12XCPU opcodes; tagging of XGATE code using these pins is not possible. An external tag triggers the state sequencer into state0 when the tagged opcode reaches the execution stage of the instruction queue.

The pins operate independently, thus the state of one pin does not affect the function of the other. External tagging is possible in emulation modes only. The presence of logic level 0 on either pin at the rising edge of the external clock (ECLK) performs the function indicated in the Table 20-43. It is possible to tag both bytes of an instruction word. If a taghit occurs, a breakpoint can be generated as defined by the DBGBRK and BDM bits in DBGC1. Each time $\overline{\text{TAGHI}}$ or $\overline{\text{TAGLO}}$ are low on the rising edge of ECLK, the old tag is replaced by a new one.

Table 20-43. Tag Pin Function

$\overline{\text{TAGHI}}$	$\overline{\text{TAGLO}}$	Tag
1	1	No tag
1	0	Low byte
0	1	High byte
0	0	Both bytes

20.4.6.2 Unconditional Tagging Function

In emulation modes a low assertion of PE5/$\overline{\text{TAGLO}}$/MODA in the 7th or 8th bus cycle after reset enables the unconditional tagging function, allowing immediate tagging via $\overline{\text{TAGHI}}$/$\overline{\text{TAGLO}}$ with breakpoint to BDM independent of the ARM, BDM and DBGBRK bits. Conversely these bits are not affected by unconditional tagging. The unconditional tagging function remains enabled until the next reset. This function allows an immediate entry to BDM in emulation modes before user code execution. The $\overline{\text{TAGLO}}$ assertion must be in the 7th or 8th bus cycle following the end of reset, whereby the prior $\overline{\text{RESET}}$ pin assertion lasts the full 192 bus cycles.

20.4.7 Breakpoints

There are several ways to generate breakpoints to the XGATE and S12XCPU modules

- Through XGATE software breakpoint requests.
- From comparator channel triggers to final state.
- Using software to write to the TRIG bit in the DBGC1 register.
- From taghits generated using the external $\overline{\text{TAGHI}}$ and $\overline{\text{TAGLO}}$ pins.
- Through the auxilliary forced breakpoint input.

20.4.7.1 XGATE Software Breakpoints

The XGATE software breakpoint instruction BRK can request an S12XCPU breakpoint, via the S12XDBG module. In this case, if the XGSBPE bit is set, the S12XDBG module immediately generates a forced breakpoint request to the S12XCPU, the state sequencer is returned to state0 and tracing, if active, is terminated. If configured for BEGIN trigger and tracing has not yet been triggered from another source, the trace buffer contains no information. Breakpoint requests from the XGATE module do not depend

upon the state of the DBGBRK or ARM bits in DBGC1. They depend solely on the state of the XGSBPE and BDM bits. Thus it is not necessary to ARM the DBG module to use XGATE software breakpoints to generate breakpoints in the S12XCPU program flow, but it is necessary to set XGSBPE. Furthermore, if a breakpoint to BDM is required, the BDM bit must also be set. When the XGATE requests an S12XCPU breakpoint, the XGATE program flow stops by default, independent of the S12XDBG module.

20.4.7.2 Breakpoints From Internal Comparator Channel Final State Triggers

Breakpoints can be generated when internal comparator channels trigger the state sequencer to the Final State. If configured for tagging, then the breakpoint is generated when the tagged opcode reaches the execution stage of the instruction queue.

If a tracing session is selected by the TSOURCE bits, breakpoints are requested when the tracing session has completed, thus if Begin or Mid aligned triggering is selected, the breakpoint is requested only on completion of the subsequent trace (see Table 20-44). If no tracing session is selected, breakpoints are requested immediately.

If the BRK bit is set on the triggering channel, then the breakpoint is generated immediately independent of tracing trigger alignment.

Table 20-44. Breakpoint Setup For Both XGATE and S12XCPU Breakpoints

BRK	TALIGN	DBGBRK[n]	Breakpoint Alignment
0	00	0	Fill Trace Buffer until trigger (no breakpoints — keep running)
0	00	1	Fill Trace Buffer until trigger, then breakpoint request occurs
0	01	0	Start Trace Buffer at trigger (no breakpoints — keep running)
0	01	1	Start Trace Buffer at trigger A breakpoint request occurs when Trace Buffer is full
0	10	0	Store a further 32 Trace Buffer line entries after trigger (no breakpoints — keep running)
0	10	1	Store a further 32 Trace Buffer line entries after trigger Request breakpoint after the 32 further Trace Buffer entries
1	00,01,10	1	Terminate tracing and generate breakpoint immediately on trigger
1	00,01,10	0	Terminate tracing immediately on trigger
x	11	x	Reserved

20.4.7.3 Breakpoints Generated Via The TRIG Bit

If a TRIG triggers occur, the Final State is entered. Tracing trigger alignment is defined by the TALIGN bits. If a tracing session is selected by the TSOURCE bits, breakpoints are requested when the tracing session has completed, thus if Begin or Mid aligned triggering is selected, the breakpoint is requested only on completion of the subsequent trace (see Table 20-44). If no tracing session is selected, breakpoints are requested immediately. TRIG breakpoints are possible even if the S12XDBG module is disarmed.

20.4.7.4 Breakpoints Via TAGHI Or TAGLO Pin Taghits

Tagging using the external $\overline{\text{TAGHI}}$/$\overline{\text{TAGLO}}$ pins always ends the session immediately at the tag hit. It is always end aligned, independent of internal channel trigger alignment configuration.

20.4.7.5 Auxilliary Breakpoint Input

When this signal asserts tracing is terminated and an immediate forced breakpoints are generated, depending on the configuration of DBGBRK bits.

20.4.7.6 S12XDBG Breakpoint Priorities

XGATE software breakpoints have the highest priority. Active tracing sessions are terminated immediately.

If a TRIG trigger occurs after Begin or Mid aligned tracing has already been triggered by a comparator instigated transition to Final State, then TRIG no longer has an effect. When the associated tracing session is complete, the breakpoint occurs. Similarly if a TRIG is followed by a subsequent trigger from a comparator channel whose BRK = 0, it has no effect, since tracing has already started.

If a comparator tag hit occurs simultaneously with an external $\overline{\text{TAGHI}}$/$\overline{\text{TAGLO}}$ hit, the state sequencer enters state0. TAGHI/TAGLO triggers are always end aligned, to end tracing immediately, independent of the tracing trigger alignment bits TALIGN[1:0].

If a forced and tagged breakpoint coincide, the forced breakpoint occurs too late to prevent the tagged instruction being loaded into the execution unit. Conversely the taghit is too late to prevent the breakpoint request in the DBG module. Thus the S12XCPU suppresses the taghit although the tagged instruction is executed.

Considering the code example below the forced breakpoint is requested when the location COUNTER is accessed. This is signalled to the S12XCPU when the next (tagged) instruction (NOP) is already in the execution stage, thus the tagged instruction is carried out but the tagged breakpoint is suppressed. Reading the PC with BDM READ_PC returns $C008

```
c000 cf ff 00    START           LDS    #$FF00
c003 a7                          NOP
c004 72 70 08                    INC    COUNTER ; Forced breakpoint location = COUNTER
c007 a7          MARK            NOP                ; Tagged opcode location = MARK
00                               BGND
[BDM firmware commands]
c008 20 01                       BRA    END ; 1st instruction on return from BDM
```

20.4.7.6.1 S12XDBG Breakpoint Priorities And BDM Interfacing

Breakpoint operation is dependent on the state of the S12XBDM module. If the S12XBDM module is active, the S12XCPU is executing out of BDM firmware and S12X breakpoints are disabled. In addition, while executing a BDM TRACE command, tagging into BDM is disabled. If BDM is not active, the breakpoint will give priority to BDM requests over SWI requests if the breakpoint happens to coincide with a SWI instruction in the user's code. On returning from BDM, the SWI from user code gets executed.

Table 20-45. Breakpoint Mapping Summary

DBGBRK[1] (DBGC1[3])	BDM Bit (DBGC1[4])	BDM Enabled	BDM Active	S12X Breakpoint Mapping
0	X	X	X	No Breakpoint
1	0	X	0	Breakpoint to SWI
1	0	X	1	No Breakpoint
1	1	0	X	Breakpoint to SWI
1	1	1	0	Breakpoint to BDM
1	1	1	1	No Breakpoint

BDM cannot be entered from a breakpoint unless the ENABLE bit is set in the BDM. If entry to BDM via a BGND instruction is attempted and the ENABLE bit in the BDM is cleared, the S12XCPU actually executes the BDM firmware code. It checks the ENABLE and returns if ENABLE is not set. If not serviced by the monitor then the breakpoint is re-asserted when the BDM returns to normal S12XCPU flow.

If the comparator register contents coincide with the SWI/BDM vector address then an SWI in user code and DBG breakpoint could occur simultaneously. The S12XCPU ensures that BDM requests have a higher priority than SWI requests. Returning from the BDM/SWI service routine care must be taken to avoid re triggering a breakpoint.

NOTE

When program control returns from a tagged breakpoint using an RTI or BDM GO command without program counter modification it will return to the instruction whose tag generated the breakpoint. To avoid re triggering a breakpoint at the same location reconfigure the S12XDBG module in the SWI routine, if configured for an SWI breakpoint, or over the BDM interface by executing a TRACE command before the GO to increment the program flow past the tagged instruction.

An XGATE software breakpoint is forced immediately, the tracing session terminated and the XGATE module execution stops. The user can thus determine if an XGATE breakpoint has occurred by reading out the XGATE program counter over the BDM interface.

Chapter 21
External Bus Interface (S12XEBIV2)

21.1 Introduction

This document describes the functionality of the XEBI block controlling the external bus interface.

The XEBI controls the functionality of a non-multiplexed external bus (a.k.a. ‘expansion bus’) in relationship with the chip operation modes. Dependent on the mode, the external bus can be used for data exchange with external memory, peripherals or PRU, and provide visibility to the internal bus externally in combination with an emulator.

21.1.1 Features

The XEBI includes the following features:

- Output of up to 23-bit address bus and control signals to be used with a non-muxed external bus
- Bidirectional 16-bit external data bus with option to disable upper half
- Visibility of internal bus activity

21.1.2 Modes of Operation

- Single-chip modes

  The external bus interface is not available in these modes.
- Expanded modes

  Address, data, and control signals are activated on the external bus in normal expanded mode and special test mode.
- Emulation modes

  The external bus is activated to interface to an external tool for emulation of normal expanded mode or normal single-chip mode applications.

Refer to the S12X_MMC section for a detailed description of the MCU operating modes.

21.1.3 Block Diagram

Figure 21-1 is a block diagram of the XEBI with all related I/O signals.

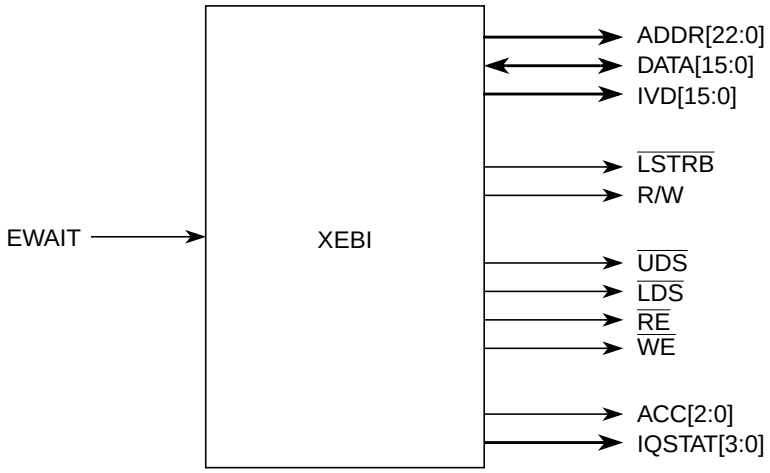

Figure 21-1. XEBI Block Diagram

21.2 External Signal Description

The user is advised to refer to the SoC section for port configuration and location of external bus signals.

NOTE

The following external bus related signals are described in other sections:
$\overline{CS2}$, $\overline{CS1}$, $\overline{CS0}$ (chip selects) — S12X_MMC section
ECLK, ECLKX2 (free-running clocks) — PIM section
$\overline{TAGHI}$, $\overline{TAGLO}$ (tag inputs) — PIM section, S12X_DBG section

Table 21-1 outlines the pin names and gives a brief description of their function. Refer to the SoC section and PIM section for reset states of these pins and associated pull-ups or pull-downs.

Table 21-1. External System Signals Associated with XEBI

Signal	I[1]/O	EBI Signal Multiplex (T)ime[2] (F)unction[3]		Description	Available in Modes					
					NS	SS	NX	ES	EX	ST
$\overline{RE}$	O	—	—	Read Enable, indicates external read access	No	No	Yes	No	No	No
ADDR[22:20]	O	T	—	External address	No	No	Yes	Yes	Yes	Yes
ACC[2:0]	O		—	Access source	No	No	No	Yes	Yes	Yes
ADDR[19:16]	O	T	—	External address	No	No	Yes	Yes	Yes	Yes
IQSTAT[3:0]	O		—	Instruction Queue Status	No	No	No	Yes	Yes	Yes
ADDR[15:1]	O	T	—	External address	No	No	Yes	Yes	Yes	Yes
IVD[15:1]	O		—	Internal visibility read data (IVIS = 1)	No	No	No	Yes	Yes	Yes
ADDR0	O	T	F	External address	No	No	No	Yes	Yes	Yes
IVD0	O			Internal visibility read data (IVIS = 1)	No	No	No	Yes	Yes	Yes
$\overline{UDS}$	O	—		Upper Data Select, indicates external access to the high byte DATA[15:8]	No	No	Yes	No	No	No
$\overline{LSTRB}$	O	—	F	Low Strobe, indicates valid data on DATA[7:0]	No	No	No	Yes	Yes	Yes
$\overline{LDS}$	O	—		Lower Data Select, indicates external access to the low byte DATA[7:0]	No	No	Yes	No	No	No
R/$\overline{W}$	O	—	F	Read/Write, indicates the direction of internal data transfers	No	No	No	Yes	Yes	Yes
$\overline{WE}$	O	—		Write Enable, indicates external write access	No	No	Yes	No	No	No
DATA[15:8]	I/O	—	—	Bidirectional data (even address)	No	No	Yes	Yes	Yes	Yes
DATA[7:0]	I/O	—	—	Bidirectional data (odd address)	No	No	Yes	Yes	Yes	Yes
$\overline{EWAIT}$	I	—	—	External control for external bus access stretches (adding wait states)	No	No	Yes	No	Yes	No

1 All inputs are capable of reducing input threshold level

2 Time-multiplex means that the respective signals share the same pin on chip level and are active alternating in a dedicated time slot (in modes where applicable).

3 Function-multiplex means that one of the respective signals sharing the same pin on chip level continuously uses the pin depending on configuration and reset state.

21.3 Memory Map and Register Definition

This section provides a detailed description of all registers accessible in the XEBI.

21.3.1 Module Memory Map

The registers associated with the XEBI block are shown in Figure 21-2.

Register Name		Bit 7	6	5	4	3	2	1	Bit 0
EBICTL0	R	ITHRS	0	HDBE	ASIZ4	ASIZ3	ASIZ2	ASIZ1	ASIZ0
	W								
EBICTL1	R	EWAITE	0	0	0	0	EXSTR2	EXSTR1	EXSTR0
	W								

= Unimplemented or Reserved

Figure 21-2. XEBI Register Summary

21.3.2 Register Descriptions

The following sub-sections provide a detailed description of each register and the individual register bits.

All control bits can be written anytime, but this may have no effect on the related function in certain operating modes. This allows specific configurations to be set up before changing into the target operating mode.

NOTE

Depending on the operating mode an available function may be enabled, disabled or depend on the control register bit. Reading the register bits will reflect the status of related function only if the current operating mode allows user control. Please refer the individual bit descriptions.

21.3.2.1 External Bus Interface Control Register 0 (EBICTL0)

	7	6	5	4	3	2	1	0
R W	ITHRS	0	HDBE	ASIZ4	ASIZ3	ASIZ2	ASIZ1	ASIZ0
Reset	0	0	1	1	1	1	1	1

= Unimplemented or Reserved

Figure 21-3. External Bus Interface Control Register 0 (EBICTL0)

Read: Anytime. In emulation modes, read operations will return the data from the external bus, in all other modes, the data are read from this register.

Write: Anytime. In emulation modes, write operations will also be directed to the external bus.

This register controls input pin threshold level and determines the external address and data bus sizes in normal expanded mode. If not in use with the external bus interface, the related pins can be used for alternative functions.

External bus is available as programmed in normal expanded mode and always full-sized in emulation modes and special test mode; function not available in single-chip modes.

Table 21-2. EBICTL0 Field Descriptions

Field	Description
7 ITHRS	**Reduced Input Threshold** — This bit selects reduced input threshold on external data bus pins and specific control input signals which are in use with the external bus interface in order to adapt to external devices with a 3.3 V, 5 V tolerant I/O. The reduced input threshold level takes effect depending on ITHRS, the operating mode and the related enable signals of the EBI pin function as summarized in Table 21-3. 0 Input threshold is at standard level on all pins 1 Reduced input threshold level enabled on pins in use with the external bus interface
5 HDBE	**High Data Byte Enable** — This bit enables the higher half of the 16-bit data bus. If disabled, only the lower 8-bit data bus can be used with the external bus interface. In this case the unused data pins and the data select signals ($\overline{UDS}$ and $\overline{LDS}$) are free to be used for alternative functions. 0 DATA[15:8], $\overline{UDS}$, and $\overline{LDS}$ disabled 1 DATA[15:8], $\overline{UDS}$, and $\overline{LDS}$ enabled
4–0 ASIZ[4:0]	**External Address Bus Size** — These bits allow scalability of the external address bus. The programmed value corresponds to the number of available low-aligned address lines (refer to Table 21-4). All address lines ADDR[22:0] start up as outputs after reset in expanded modes. This needs to be taken into consideration when using alternative functions on relevant pins in applications which utilize a reduced external address bus.

Table 21-3. Input Threshold Levels on External Signals

ITHRS	External Signal	NS	SS	NX	ES	EX	ST
0	DATA[15:8] $\overline{TAGHI}$, $\overline{TAGLO}$	Standard	Standard	Standard	Reduced	Reduced	Standard
	DATA[7:0]						
	EWAIT				Standard	Standard	
1	DATA[15:8] $\overline{TAGHI}$, $\overline{TAGLO}$	Standard	Standard	Reduced if HDBE = 1	Reduced	Reduced	Reduced
	DATA[7:0]			Reduced			
	$\overline{EWAIT}$			Reduced if EWAITE = 1	Standard	Reduced if EWAITE = 1	Standard

Table 21-4. External Address Bus Size

ASIZ[4:0]	Available External Address Lines
00000	None
00001	$\overline{UDS}$
00010	ADDR1, $\overline{UDS}$
00011	ADDR[2:1], $\overline{UDS}$
:	:
10110	ADDR[21:1], $\overline{UDS}$
10111 : 11111	ADDR[22:1], $\overline{UDS}$

21.3.2.2 External Bus Interface Control Register 1 (EBICTL1)

	7	6	5	4	3	2	1	0
R	EWAITE	0	0	0	0	EXSTR2	EXSTR1	EXSTR0
W								
Reset	0	0	0	0	0	1	1	1

= Unimplemented or Reserved

Figure 21-4. External Bus Interface Control Register 1 (EBICTL1)

Read: Anytime. In emulation modes, read operations will return the data from the external bus, in all other modes the data are read from this register.

Write: Anytime. In emulation modes, write operations will also be directed to the external bus.

This register is used to configure the external access stretch (wait) function.

Table 21-5. EBICTL1 Field Descriptions

Field	Description
7 EWAITE	**External Wait Enable** — This bit enables the external access stretch function using the external $\overline{\text{EWAIT}}$ input pin. Enabling this feature may have effect on the minimum number of additional stretch cycles (refer to Table 21-6). External wait feature is only active if enabled in normal expanded mode and emulation expanded mode; function not available in all other operating modes. 0 External wait is disabled 1 External wait is enabled
2–0 EXSTR[2:0]	**External Access Stretch Bits 2, 1, 0** — This three bit field determines the amount of additional clock stretch cycles on every access to the external address space as shown in Table 21-6. The minimum number of stretch cycles depends on the EWAITE setting. Stretch cycles are added as programmed in normal expanded mode and emulation expanded mode; function not available in all other operating modes.

Table 21-6. External Access Stretch Bit Definition

EXSTR[2:0]	Number of Stretch Cycles	
	EWAITE = 0	EWAITE = 1
000	1 cycle	>= 2 cycles
001	2 cycles	>= 2 cycles
010	3 cycles	>= 3 cycles
011	4 cycles	>= 4 cycles
100	5 cycles	>= 5 cycles
101	6 cycles	>= 6 cycles
110	7 cycles	>= 7 cycles
111	8 cycles	>= 8 cycles

21.4 Functional Description

This section describes the functions of the external bus interface. The availability of external signals and functions in relation to the operating mode is initially summarized and described in more detail in separate sub-sections.

21.4.1 Operating Modes and External Bus Properties

A summary of the external bus interface functions for each operating mode is shown in Table 21-7.

Table 21-7. Summary of Functions

Properties (if Enabled)	Single-Chip Modes		Expanded Modes			
	Normal Single-Chip	Special Single-Chip	Normal Expanded	Emulation Single-Chip	Emulation Expanded	Special Test
Timing Properties						
PRR access[1]	2 cycles read internal write internal	2 cycles read internal write internal	2 cycles read internal write internal	2 cycles read external write int & ext	2 cycles read external write int & ext	2 cycles read internal write internal
Internal access visible externally	—	—	—	1 cycle	1 cycle	1 cycle
External address access and unimplemented area access[2]	—	—	Max. of 2 to 9 programmed cycles or n cycles of ext. wait[3]	1 cycle	Max. of 2 to 9 programmed cycles or n cycles of ext. wait[3]	1 cycle
Flash area address access[4]	—	—	—	1 cycle	1 cycle	1 cycle
Signal Properties						
Bus signals	—	—	ADDR[22:1] DATA[15:0]	ADDR[22:20]/ACC[2:0] ADDR[19:16]/IQSTAT[3:0] ADDR[15:0]/IVD[15:0] DATA[15:0]	ADDR[22:20]/ACC[2:0] ADDR[19:16]/IQSTAT[3:0] ADDR[15:0]/IVD[15:0] DATA[15:0]	ADDR[22:0] DATA[15:0]
Data select signals (if 16-bit data bus)	—	—	$\overline{UDS}$ $\overline{LDS}$	ADDR0 $\overline{LSTRB}$	ADDR0 $\overline{LSTRB}$	ADDR0 $\overline{LSTRB}$
Data direction signals	—	—	$\overline{RE}$ $\overline{WE}$	R/$\overline{W}$	R/$\overline{W}$	R/$\overline{W}$
External wait feature	—	—	$\overline{EWAIT}$	—	$\overline{EWAIT}$	—
Reduced input threshold enabled on	—	—	Refer to Table 21-3	DATA[15:0] $\overline{EWAIT}$	DATA[15:0] $\overline{EWAIT}$	Refer to Table 21-3

1 Incl. S12X_EBI registers

2 Refer to S12X_MMC section.

3 If EWAITE = 1, the minimum number of external bus cycles is 3.

4 Available only if configured appropriately by ROMON and EROMON (refer to S12X_MMC section).

21.4.2 Internal Visibility

Internal visibility allows the observation of the internal MCU address and data bus as well as the determination of the access source and the CPU pipe (queue) status through the external bus interface.

Internal visibility is always enabled in emulation single chip mode and emulation expanded mode. Internal CPU and BDM accesses are made visible on the external bus interface, except those to BDM firmware and BDM registers.

Internal reads are made visible on ADDRx/IVDx (address and read data multiplexed, see Table 21-9 to Table 21-11), internal writes on ADDRx and DATAx (see Table 21-12 to Table 21-14). R/$\overline{W}$ and $\overline{LSTRB}$ show the type of access. External read data are also visible on IVDx.

21.4.2.1 Access Source and Instruction Queue Status Signals

The access source (bus master) can be determined from the external bus control signals ACC[2:0] as shown in Table 21-8.

Table 21-8. Determining Access Source from Control Signals

ACC[2:0]	Access Description
000	Repetition of previous access cycle
001	CPU access
010	BDM access
011	XGATE PRR access[1]
100	No access[2]
101, 110, 111	Reserved

[1] Invalid IVD brought out in read cycles

[2] Denotes also accesses to BDM firmware and BDM registers (IQSTATx are ‘XXXX’ and R/$\overline{W}$ = 1 in these cases)

The CPU instruction queue status (execution-start and data-movement information) is brought out as IQSTAT[3:0] signals. For decoding of the IQSTAT values, refer to the S12X_CPU section.

21.4.2.2 Emulation Modes Timing

A bus access lasts 1 ECLK cycle. In case of a stretched external access (emulation expanded mode), up to an infinite amount of ECLK cycles may be added. ADDRx values will only be shown in ECLK high phases, while ACCx, IQSTATx, and IVDx values will only be presented in ECLK low phases.

Based on this multiplex timing, ACCx are only shown in the current (first) access cycle. IQSTATx and (for read accesses) IVDx follow in the next cycle. If the access takes more than one bus cycle, ACCx display NULL (0x000) in the second and all following cycles of the access. IQSTATx display NULL (0x0000) from the third until one cycle after the access to indicate continuation.

The resulting timing pattern of the external bus signals is outlined in the following tables for read, write and interleaved read/write accesses. Three examples represent different access lengths of 1, 2, and n–1 bus cycles. Non-shaded bold entries denote all values related to Access #0.

The following terminology is used:

‘addr’ — value(ADDRx); small letters denote the logic values at the respective pins
‘x’ — Undefined output pin values
‘z’ — Tristate pins
‘?’ — Dependent on previous access (read or write); IVDx: ‘ivd’ or ‘x’; DATAx: ‘data’ or ‘z’

21.4.2.2.1 Read Access Timing

Table 21-9. Read Access (1 Cycle)

		Access #0				Access #1		
Bus cycle ->	...	**1**		**2**		**3**		...
ECLK phase	...	high	low	high	low	high	low	...
ADDR[22:20] / ACC[2:0]	...		**acc 0**		acc 1		acc 2	...
ADDR[19:16] / IQSTAT[3:0]	...	**addr 0**	iqstat -1	addr 1	**iqstat 0**	addr 2	iqstat 1	...
ADDR[15:0] / IVD[15:0]	...		?		**ivd 0**		ivd 1	...
DATA[15:0] (internal read)	...	?	**z**	**z**	z	z	z	...
DATA[15:0] (external read)	...	?	**z**	**data 0**	z	data 1	z	...
R/$\overline{W}$	...	1	1	1	1	1	1	...

Table 21-10. Read Access (2 Cycles)

		Access #0				Access #1		
Bus cycle ->	...	**1**		**2**		**3**		...
ECLK phase	...	high	low	high	low	high	low	...
ADDR[22:20] / ACC[2:0]	...		**acc 0**		**000**		acc 1	...
ADDR[19:16] / IQSTAT[3:0]	...	**addr 0**	iqstat-1	**addr 0**	**iqstat 0**	addr 1	**0000**	...
ADDR[15:0] / IVD[15:0]	...		?		**x**		**ivd 0**	...
DATA[15:0] (internal read)	...	?	**z**	**z**	**z**	**z**	z	...
DATA[15:0] (external read)	...	?	**z**	**z**	**z**	**data 0**	z	...
R/$\overline{W}$	...	1	1	1	1	1	1	...

Table 21-11. Read Access (n–1 Cycles)

		Access #0							Access #1		
Bus cycle ->	...	**1**		**2**		**3**		...	**n**		...
ECLK phase	...	high	low	high	low	high	low	...	high	low	...
ADDR[22:20] / ACC[2:0]	...		**acc 0**		**000**		**000**	...		acc 1	...
ADDR[19:16] / IQSTAT[3:0]	...	**addr 0**	iqstat-1	**addr 0**	**iqstat 0**	**addr 0**	**0000**	...	addr 1	**0000**	...
ADDR[15:0] / IVD[15:0]	...		?		**x**		**x**	...		**ivd 0**	...
DATA[15:0] (internal read)	...	?	**z**	**z**	**z**	**z**	**z**	...	**z**	z	...
DATA[15:0] (external read)	...	?	**z**	**z**	**z**	**z**	**z**	...	**data 0**	z	...
R/$\overline{W}$	...	1	1	1	1	1	1	...	1	1	...

21.4.2.2.2 Write Access Timing

Table 21-12. Write Access (1 Cycle)

		Access #0		Access #1		Access #2		
Bus cycle ->	...	**1**		**2**		**3**		...
ECLK phase	...	high	low	high	low	high	low	...
ADDR[22:20] / ACC[2:0]	...		**acc 0**		acc 1		acc 2	...
ADDR[19:16] / IQSTAT[3:0]	...	**addr 0**	iqstat -1	addr 1	**iqstat 0**	addr 2	iqstat 1	...
ADDR[15:0] / IVD[15:0]	...		?		**x**		x	...
DATA[15:0] (write)	...	?	**data 0**		data 1		data 2	...
R/$\overline{W}$	...	0	0	1	1	1	1	...

Table 21-13. Write Access (2 Cycles)

		Access #0				Access #1		
Bus cycle ->	...	**1**		**2**		**3**		...
ECLK phase	...	high	low	high	low	high	low	...
ADDR[22:20] / ACC[2:0]	...		**acc 0**		**000**		acc 1	...
ADDR[19:16] / IQSTAT[3:0]	...	**addr 0**	iqstat-1	**addr 0**	**iqstat 0**	addr 1	**0000**	...
ADDR[15:0] / IVD[15:0]	...		?		**x**		**x**	...
DATA[15:0] (write)	...	?	**data 0**				x	...
R/$\overline{W}$	...	0	0	0	0	1	1	...

Table 21-14. Write Access (n–1 Cycles)

		Access #0							Access #1		
Bus cycle ->	...	**1**		**2**		**3**		...	**n**		...
ECLK phase	...	high	low	high	low	high	low	...	high	low	...
ADDR[22:20] / ACC[2:0]	...		**acc 0**		**000**		**000**	**...**		acc 1	...
ADDR[19:16] / IQSTAT[3:0]	...	**addr 0**	iqstat-1	**addr 0**	**iqstat 0**	**addr 0**	**0000**	**...**	addr 1	**0000**	...
ADDR[15:0] / IVD[15:0]	...		?		**x**		**x**	**...**		**x**	...
DATA[15:0] (write)	...	?	**data 0**							x	...
R/$\overline{W}$	...	0	0	0	0	0	0	...	1	1	...

21.4.2.2.3 Read-Write-Read Access Timing

Table 21-15. Interleaved Read-Write-Read Accesses (1 Cycle)

		Access #0		Access #1		Access #2		
Bus cycle ->	...	**1**		**2**		**3**		...
ECLK phase	...	high	low	high	low	high	low	...
ADDR[22:20] / ACC[2:0]	...		**acc 0**		acc 1		acc 2	...
ADDR[19:16] / IQSTAT[3:0]	...	**addr 0**	iqstat -1	addr 1	**iqstat 0**	addr 2	iqstat 1	...
ADDR[15:0] / IVD[15:0]	...		?		**ivd 0**		x	...
DATA[15:0] (internal read)	...	?	**z**	**z**	(write) data 1		z	...
DATA[15:0] (external read)	...	?	**z**	**data 0**	(write) data 1		z	...
R/$\overline{W}$	...	1	1	0	0	1	1	...

21.4.2.3 Internal Visibility Data

Depending on the access size and alignment, either a word of read data is made visible on the address lines or only the related data byte will be presented in the ECLK low phase. For details refer to Table 21-16.

Table 21-16. IVD Read Data Output

Access	IVD[15:8]	IVD[7:0]
Word read of data at an even and even+1 address	ivd(even)	ivd(even+1)
Word read of data at an odd and odd+1 internal RAM address (misaligned)	ivd(odd+1)	ivd(odd)
Byte read of data at an even address	ivd(even)	addr[7:0] (rep.)
Byte read of data at an odd address	addr[15:8] (rep.)	ivd(odd)

21.4.3 Accesses to Port Replacement Registers

All read and write accesses to PRR addresses take two bus clock cycles independent of the operating mode. If writing to these addresses in emulation modes, the access is directed to both, the internal register and the external resource while reads will be treated external.

The XEBI control registers also belong to this category.

21.4.4 Stretched External Bus Accesses

In order to allow fast internal bus cycles to coexist in a system with slower external resources, the XEBI supports stretched external bus accesses (wait states).

This feature is available in normal expanded mode and emulation expanded mode for accesses to all external addresses except emulation memory and PRR. In these cases the fixed access times are 1 or 2 cycles, respectively.

Stretched accesses are controlled by:

1. EXSTR[2:0] bits in the EBICTL1 register configuring fixed amount of stretch cycles
2. Activation of the external wait feature by EWAITE in EBICTL1 register
3. Assertion of the external $\overline{\text{EWAIT}}$ signal when EWAITE = 1

The EXSTR[2:0] control bits can be programmed for generation of a fixed number of 1 to 8 stretch cycles. If the external wait feature is enabled, the minimum number of additional stretch cycles is 2. An arbitrary amount of stretch cycles can be added using the $\overline{\text{EWAIT}}$ input.

$\overline{\text{EWAIT}}$ needs to be asserted at least for a minimal specified time window within an external access cycle for the internal logic to detect it and add a cycle (refer to electrical characteristics). Holding it for additional cycles will cause the external bus access to be stretched accordingly.

Write accesses are stretched by holding the initiator in its current state for additional cycles as programmed and controlled by external wait after the data have been driven out on the external bus. This results in an extension of time the bus signals and the related control signals are valid externally.

Read data are not captured by the system in normal expanded mode until the specified setup time before the $\overline{\text{RE}}$ rising edge.

Read data are not captured in emulation expanded mode until the specified setup time before the falling edge of ECLK.

In emulation expanded mode, accesses to the internal flash or the emulation memory (determined by EROMON and ROMON bits; see S12X_MMC section for details) always take 1 cycle and stretching is not supported. In case the internal flash is taken out of the map in user applications, accesses are stretched as programmed and controlled by external wait.

21.4.5 Data Select and Data Direction Signals

The S12X_EBI supports byte and word accesses at any valid external address. The big endian system of the MCU is extended to the external bus; however, word accesses are restricted to even aligned addresses. The only exception is the visibility of misaligned word accesses to addresses in the internal RAM as this module exclusively supports these kind of accesses in a single cycle.

With the above restriction, a fixed relationship is implied between the address parity and the dedicated bus halves where the data are accessed: DATA[15:8] is related to even addresses and DATA[7:0] is related to odd addresses.

In expanded modes the data access type is externally determined by a set of control signals, i.e., data select and data direction signals, as described below. The data select signals are not available if using the external bus interface with an 8-bit data bus.

21.4.5.1 Normal Expanded Mode

In normal expanded mode, the external signals $\overline{\text{RE}}$, $\overline{\text{WE}}$, $\overline{\text{UDS}}$, $\overline{\text{LDS}}$ indicate the access type (read/write), data size and alignment of an external bus access (Table 21-17).

Table 21-17. Access in Normal Expanded Mode

Access	$\overline{RE}$	$\overline{WE}$	$\overline{UDS}$	$\overline{LDS}$	DATA[15:8]		DATA[7:0]	
					I/O	data(addr)	I/O	data(addr)
Word write of data on DATA[15:0] at an even and even+1 address	1	0	0	0	Out	data(even)	Out	data(odd)
Byte write of data on DATA[7:0] at an odd address	1	0	1	0	In	x	Out	data(odd)
Byte write of data on DATA[15:8] at an even address	1	0	0	1	Out	data(even)	In	x
Word read of data on DATA[15:0] at an even and even+1 address	0	1	0	0	In	data(even)	In	data(odd)
Byte read of data on DATA[7:0] at an odd address	0	1	1	0	In	x	In	data(odd)
Byte read of data on DATA[15:8] at an even address	0	1	0	1	In	data(even)	In	x
Indicates No Access	1	1	1	1	In	x	In	x
Unimplemented	1	1	1	0	In	x	In	x
	1	1	0	1	In	x	In	x

21.4.5.2 Emulation Modes and Special Test Mode

In emulation modes and special test mode, the external signals $\overline{LSTRB}$, R/$\overline{W}$, and ADDR0 indicate the access type (read/write), data size and alignment of an external bus access. Misaligned accesses to the internal RAM and misaligned XGATE PRR accesses in emulation modes are the only type of access that are able to produce $\overline{LSTRB}$ = ADDR0 = 1. This is summarized in Table 21-18.

Table 21-18. Access in Emulation Modes and Special Test Mode

Access	R/$\overline{W}$	$\overline{LSTRB}$	ADDR0	DATA[15:8]		DATA[7:0]	
				I/O	data(addr)	I/O	data(addr)
Word write of data on DATA[15:0] at an even and even+1 address	0	0	0	Out	data(even)	Out	data(odd)
Byte write of data on DATA[7:0] at an odd address	0	0	1	In	x	Out	data(odd)
Byte write of data on DATA[15:8] at an even address	0	1	0	Out	data(odd)	In	x
Word write at an odd and odd+1 internal RAM address (misaligned — only in emulation modes)	0	1	1	Out	data(odd+1)	Out	data(odd)
Word read of data on DATA[15:0] at an even and even+1 address	1	0	0	In	data(even)	In	data(even+1)
Byte read of data on DATA[7:0] at an odd address	1	0	1	In	x	In	data(odd)
Byte read of data on DATA[15:8] at an even address	1	1	0	In	data(even)	In	x
Word read at an odd and odd+1 internal RAM address (misaligned - only in emulation modes)	1	1	1	In	data(odd+1)	In	data(odd)

21.4.6 Low-Power Options

The XEBI does not support any user-controlled options for reducing power consumption.

21.4.6.1 Run Mode

The XEBI does not support any options for reducing power in run mode.

Power consumption is reduced in single-chip modes due to the absence of the external bus interface. Operation in expanded modes results in a higher power consumption, however any unnecessary toggling of external bus signals is reduced to the lowest indispensable activity by holding the previous states between external accesses.

21.4.6.2 Wait Mode

The XEBI does not support any options for reducing power in wait mode.

21.4.6.3 Stop Mode

The XEBI will cease to function in stop mode.

21.5 Initialization/Application Information

This section describes the external bus interface usage and timing. Typical customer operating modes are normal expanded mode and emulation modes, specifically to be used in emulator applications. Taking the availability of the external wait feature into account the use cases are divided into four scenarios:

- Normal expanded mode
  - External wait feature disabled
  - External wait feature enabled
- Emulation modes
  - Emulation single-chip mode (without wait states)
  - Emulation expanded mode (with optional access stretching)

Normal single-chip mode and special single-chip mode do not have an external bus. Special test mode is used for factory test only. Therefore, these modes are omitted here.

All timing diagrams referred to throughout this section are available in the Electrical Characteristics appendix of the SoC section.

21.5.1 Normal Expanded Mode

This mode allows interfacing to external memories or peripherals which are available in the commercial market. In these applications the normal bus operation requires a minimum of 1 cycle stretch for each external access.

21.5.1.1 Example 1a: External Wait Feature Disabled

The first example of bus timing of an external read and write access with the external wait feature disabled is shown in

- Figure ‘Example 1a: Normal Expanded Mode — Read Followed by Write’

The associated supply voltage dependent timing are numbers given in

- Table ‘Example 1a: Normal Expanded Mode Timing V_{DD5} = 5.0 V (EWAITE = 0)’
- Table ‘Example 1a: Normal Expanded Mode Timing V_{DD5} = 3.0 V (EWAITE = 0)’

Systems designed this way rely on the internal programmable access stretching. These systems have predictable external memory access times. The additional stretch time can be programmed up to 8 cycles to provide longer access times.

21.5.1.2 Example 1b: External Wait Feature Enabled

The external wait operation is shown in this example. It can be used to exceed the amount of stretch cycles over the programmed number in EXSTR[2:0]. The feature must be enabled by writing EWAITE = 1.

If the $\overline{\text{EWAIT}}$ signal is not asserted, the number of stretch cycles is forced to a minimum of 2 cycles. If $\overline{\text{EWAIT}}$ is asserted within the predefined time window during the access it will be strobed active and another stretch cycle is added. If strobed inactive, the next cycle will be the last cycle before the access is finished. $\overline{\text{EWAIT}}$ can be held asserted as long as desired to stretch the access.

An access with 1 cycle stretch by $\overline{\text{EWAIT}}$ assertion is shown in

- Figure ‘Example 1b: Normal Expanded Mode — Stretched Read Access’
- Figure ‘Example 1b: Normal Expanded Mode — Stretched Write Access’

The associated timing numbers for both operations are given in

- Table ‘Example 1b: Normal Expanded Mode Timing V_{DD5} = 5.0 V (EWAITE = 1)’
- Table ‘Example 1b: Normal Expanded Mode Timing V_{DD5} = 3.0 V (EWAITE = 1)’

It is recommended to use the free-running clock (ECLK) at the fastest rate (bus clock rate) to synchronize the $\overline{\text{EWAIT}}$ input signal.

21.5.2 Emulation Modes

In emulation mode applications, the development systems use a custom PRU device to rebuild the single-chip or expanded bus functions which are lost due to the use of the external bus with an emulator.

Accesses to a set of registers controlling the related ports in normal modes (refer to SoC section) are directed to the external bus in emulation modes which are substituted by PRR as part of the PRU. Accesses to these registers take a constant time of 2 cycles.

Depending on the setting of ROMON and EROMON (refer to S12X_MMC section), the program code can be executed from internal memory or an optional external emulation memory (EMULMEM). No wait state operation (stretching) of the external bus access is done in emulation modes when accessing internal memory or emulation memory addresses.

In both modes observation of the internal operation is supported through the external bus (internal visibility).

21.5.2.1 Example 2a: Emulation Single-Chip Mode

This mode is used for emulation systems in which the target application is operating in normal single-chip mode.

Figure 21-5 shows the PRU connection with the available external bus signals in an emulator application.

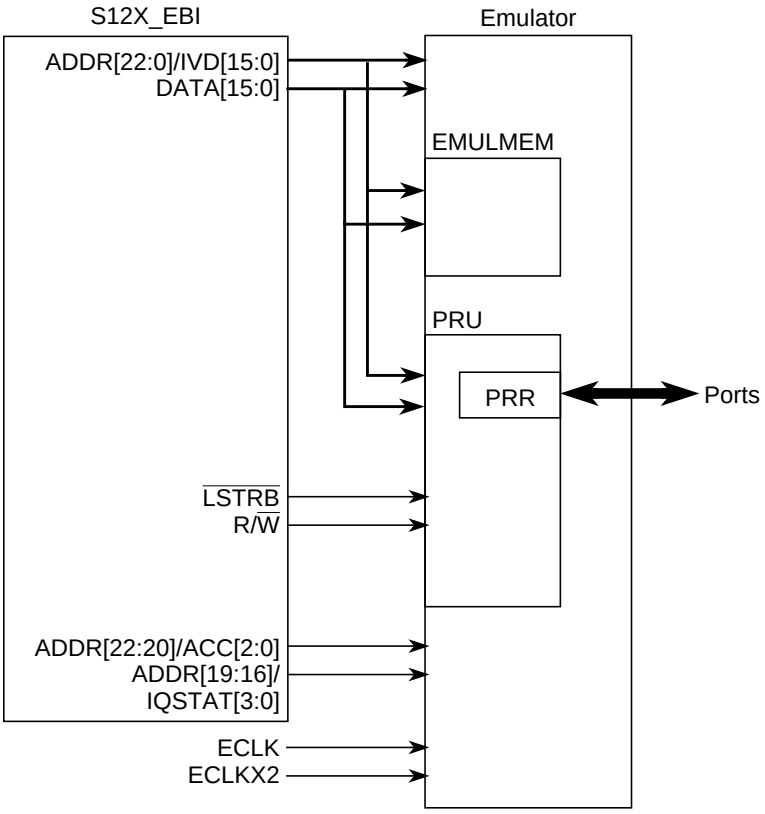

Figure 21-5. Application in Emulation Single-Chip Mode

The timing diagram for this operation is shown in:

- Figure ‘Example 2a: Emulation Single-Chip Mode — Read Followed by Write’

The associated timing numbers are given in:

- Table ‘Example 2a: Emulation Single-Chip Mode Timing (EWAITE = 0)’

Timing considerations:

- Signals muxed with address lines ADDRx, i.e., IVDx, IQSTATx and ACCx, have the same timing.
- $\overline{\text{LSTRB}}$ has the same timing as R/$\overline{\text{W}}$.
- ECLKX2 rising edges have the same timing as ECLK edges.
- The timing for accesses to PRU registers, which take 2 cycles to complete, is the same as the timing for an external non-PRR access with 1 cycle of stretch as shown in example 2b.

21.5.2.2 Example 2b: Emulation Expanded Mode

This mode is used for emulation systems in which the target application is operating in normal expanded mode.

If the external bus is used with a PRU, the external device rebuilds the data select and data direction signals $\overline{UDS}$, $\overline{LDS}$, $\overline{RE}$, and $\overline{WE}$ from the ADDR0, $\overline{LSTRB}$, and R/$\overline{W}$ signals.

Figure 21-6 shows the PRU connection with the available external bus signals in an emulator application.

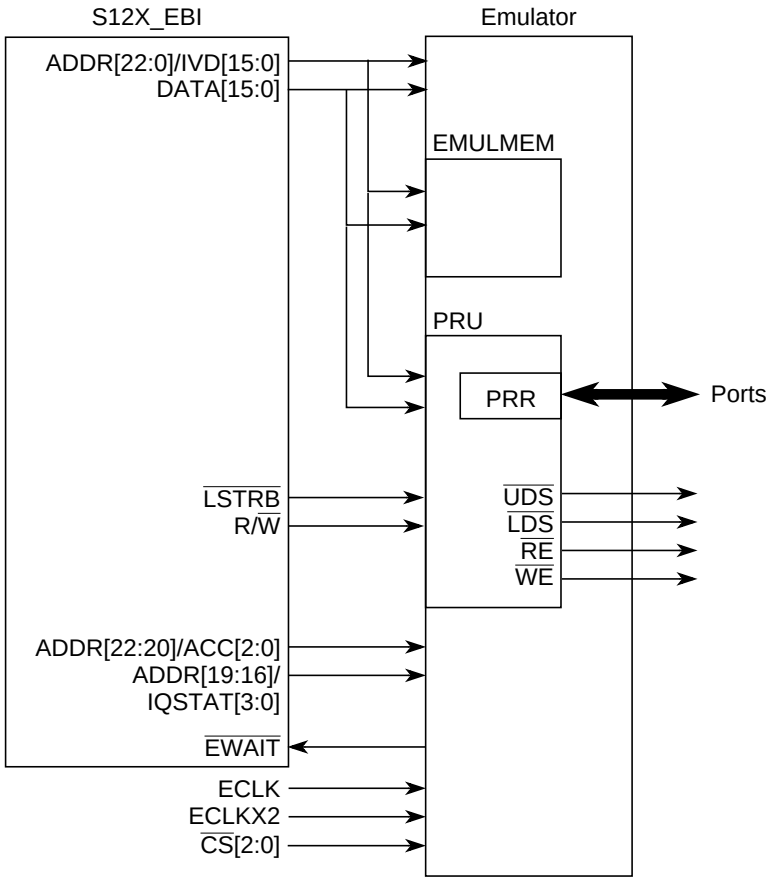

Figure 21-6. Application in Emulation Expanded Mode

The timings of accesses with 1 stretch cycle are shown in

- Figure ‘Example 2b: Emulation Expanded Mode — Read with 1 Stretch Cycle’
- Figure ‘Example 2b: Emulation Expanded Mode — Write with 1 Stretch Cycle’

The associated timing numbers are given in

- Table ‘Example 2b: Emulation Expanded Mode Timing V_{DD5} = 5.0 V (EWAITE = 0)’ (this also includes examples for alternative settings of 2 and 3 additional stretch cycles)

Timing considerations:

- If no stretch cycle is added, the timing is the same as in Emulation Single-Chip Mode.

Chapter 22
DP512 Port Integration Module (S12XDP512PIMV2)

22.1 Introduction

The S12XD family port integration module (below referred to as PIM) establishes the interface between the peripheral modules including the non-multiplexed external bus interface module (S12X_EBI) and the I/O pins for all ports. It controls the electrical pin properties as well as the signal prioritization and multiplexing on shared pins.

This document covers the description of:

- Port A, B used as address output of the S12X_EBI
- Port C, D used as data I/O of the S12X_EBI
- Port E associated with the S12X_EBI control signals and the IRQ, XIRQ interrupt inputs
- Port K associated with address output and control signals of the S12X_EBI
- Port T connected to the Enhanced Capture Timer (ECT) module
- Port S associated with 2 SCI and 1 SPI modules
- Port M associated with 4 MSCAN modules and 1 SCI module
- Port P connected to the PWM and 2 SPI modules — inputs can be used as an external interrupt source
- Port H associated with 2 SCI modules — inputs can be used as an external interrupt source
- Port J associated with 1 MSCAN, 1 SCI, and 2 IIC modules — inputs can be used as an external interrupt source
- Port AD0 and AD1 associated with one 8-channel and one 16-channel ATD module

Most I/O pins can be configured by register bits to select data direction and drive strength, to enable and select pull-up or pull-down devices. Interrupts can be enabled on specific pins resulting in status flags.

The I/O's of 2 MSCAN and all 3 SPI modules can be routed from their default location to alternative port pins.

NOTE

The implementation of the PIM is device dependent. Therefore some functions are not available on certain derivatives or 112-pin and 80-pin package options.

22.1.1 Features

A full-featured PIM module includes these distinctive registers:

- Data and data direction registers for Ports A, B, C, D, E, K, T, S, M, P, H, J, AD0, and AD1 when used as general-purpose I/O
- Control registers to enable/disable pull-device and select pull-ups/pull-downs on Ports T, S, M, P, H, and J on per-pin basis
- Control registers to enable/disable pull-up devices on Ports AD0, and AD1 on per-pin basis
- Single control register to enable/disable pull-ups on Ports A, B, C, D, E, and K on per-port basis and on BKGD pin
- Control registers to enable/disable reduced output drive on Ports T, S, M, P, H, J, AD0, and AD1 on per-pin basis
- Single control register to enable/disable reduced output drive on Ports A, B, C, D, E, and K on per-port basis
- Control registers to enable/disable open-drain (wired-OR) mode on Ports S and M
- Control registers to enable/disable pin interrupts on Ports P, H, and J
- Interrupt flag register for pin interrupts on Ports P, H, and J
- Control register to configure $\overline{\text{IRQ}}$ pin operation
- Free-running clock outputs

A standard port pin has the following minimum features:

- Input/output selection
- 5V output drive with two selectable drive strengths
- 5V digital and analog input
- Input with selectable pull-up or pull-down device

Optional features:

- Open drain for wired-OR connections
- Interrupt inputs with glitch filtering
- Reduced input threshold to support low voltage applications

22.1.2 Block Diagram

Figure 22-1 is a block diagram of the PIM.

- Signals shown in **Bold** are not available in 80-pin packages.
- Signals shown in ***Bold-Italics*** are neither available in 112-pin nor in 80-pin packages.
- Shaded labels denote alternative module routing ports.

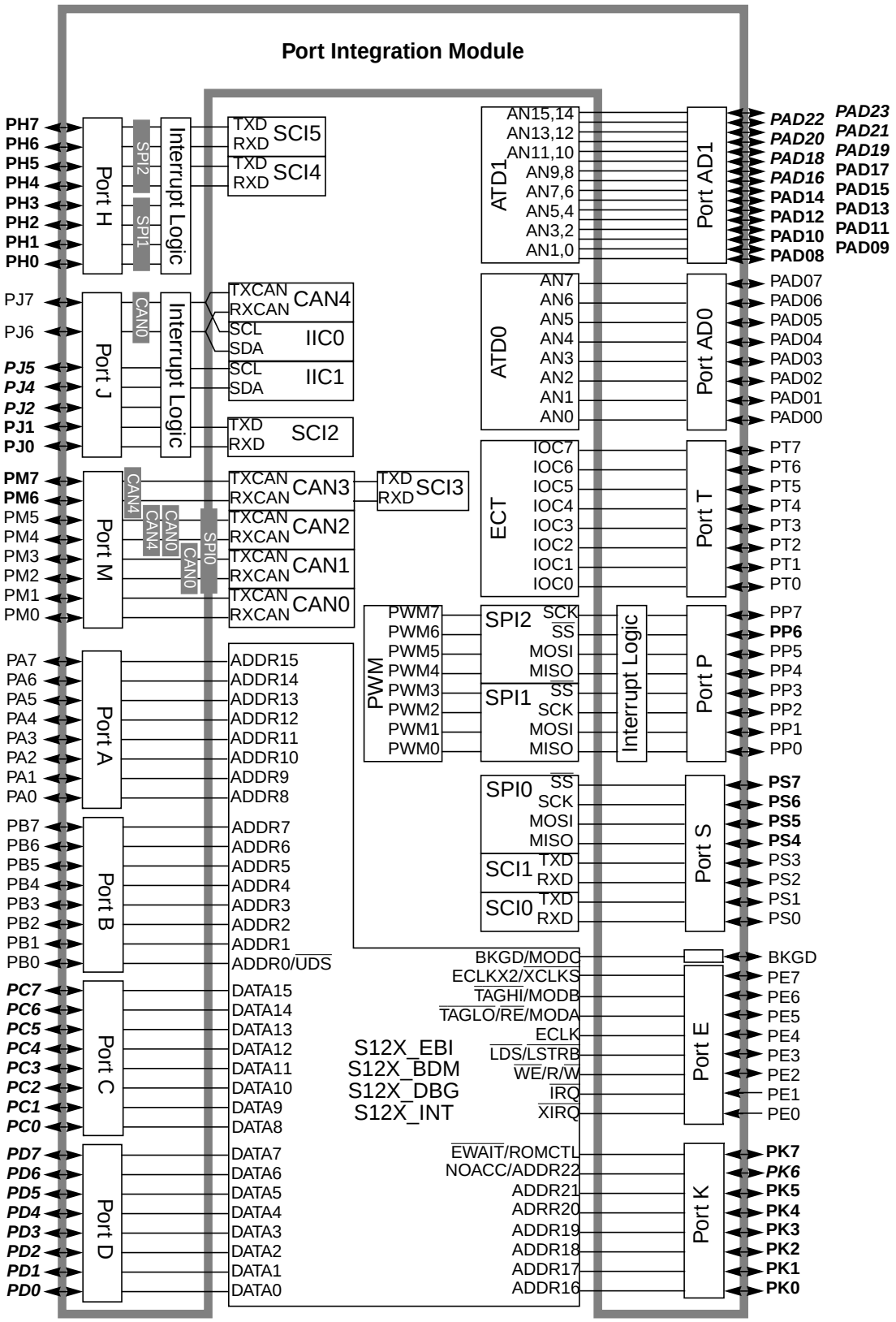

Figure 22-1. PIM Block Diagram

22.2 External Signal Description

This section lists and describes the signals that do connect off-chip.

22.2.1 Signal Properties

Table 22-1 shows all the pins and their functions that are controlled by the PIM. *Refer to Section 22.4, "Functional Description" for the availability of the individual pins in the different package options.*

NOTE

If there is more than one function associated with a pin, the priority is indicated by the position in the table from top (highest priority) to bottom (lowest priority).

Table 22-1. Pin Functions and Priorities (Sheet 1 of 7)

Port	Pin Name	Pin Function and Priority	I/O	Description	Pin Function after Reset
—	BKGD	MODC[1]	I	MODC input during $\overline{\text{RESET}}$	BKGD
		BKGD	I/O	S12X_BDM communication pin	
A	PA[7:0]	ADDR[15:8] mux IVD[15:8][2]	O	High-order external bus address output (multiplexed with IVIS data)	Mode dependent[3]
		GPIO	I/O	General-purpose I/O	
B	PB[7:1]	ADDR[7:1] mux IVD[7:1][2]	O	Low-order external bus address output (multiplexed with IVIS data)	Mode dependent[3]
		GPIO	I/O	General-purpose I/O	
	PB[0]	ADDR[0] mux IVD0[2]	O	Low-order external bus address output (multiplexed with IVIS data)	
		$\overline{\text{UDS}}$	O	Upper data strobe	
		GPIO	I/O	General-purpose I/O	
C	PC[7:0]	DATA[15:8]	I/O	High-order bidirectional data input/output Configurable for reduced input threshold	Mode dependent[3]
		GPIO	I/O	General-purpose I/O	
D	PD[7:0]	DATA[7:0]	I/O	Low-order bidirectional data input/output Configurable for reduced input threshold	Mode dependent[3]
		GPIO	I/O	General-purpose I/O	

Table 22-1. Pin Functions and Priorities (Sheet 2 of 7)

Port	Pin Name	Pin Function and Priority	I/O	Description	Pin Function after Reset
E	PE[7]	$\overline{XCLKS}$[1]	I	External clock selection input during $\overline{RESET}$	Mode dependent[3]
		ECLKX2	I	Free-running clock output at Core Clock rate (ECLK x 2)	
		GPIO	I/O	General-purpose I/O	
	PE[6]	MODB[1]	I	MODB input during $\overline{RESET}$	
		$\overline{TAGHI}$	I	Instruction tagging low pin Configurable for reduced input threshold	
		GPIO	I/O	General-purpose I/O	
	PE[5]	MODA[1]	I	MODA input during $\overline{RESET}$	
		$\overline{RE}$	O	Read enable signal	
		$\overline{TAGLO}$	I	Instruction tagging low pin Configurable for reduced input threshold	
		GPIO	I/O	General-purpose I/O	
	PE[4]	ECLK	O	Free-running clock output at the Bus Clock rate or programmable divided in normal modes	
		GPIO	I/O	General-purpose I/O	
	PE[3]	EROMCTL[1]	I	EROMON bit control input during $\overline{RESET}$	
		$\overline{LSTRB}$	O	Low strobe bar output	
		$\overline{LDS}$	O	Lower data strobe	
		GPIO	I/O	General-purpose I/O	
	PE[2]	R/$\overline{W}$	O	Read/write output for external bus	
		$\overline{WE}$	O	Write enable signal	
		GPIO	I/O	General-purpose I/O	
	PE[1]	$\overline{IRQ}$	I	Maskable level- or falling edge-sensitive interrupt input	
		GPIO	I/O	General-purpose I/O	
	PE[0]	$\overline{XIRQ}$	I	Non-maskable level-sensitive interrupt input	
		GPIO	I/O	General-purpose I/O	

Table 22-1. Pin Functions and Priorities (Sheet 3 of 7)

Port	Pin Name	Pin Function and Priority	I/O	Description	Pin Function after Reset
K	PK[7]	ROMCTL[1]	I	ROMON bit control input during $\overline{\text{RESET}}$	Mode dependent[3]
		$\overline{\text{EWAIT}}$	I	External Wait signal Configurable for reduced input threshold	
		GPIO	I/O	General-purpose I/O	
	PK[6:4]	ADDR[22:20] mux ACC[2:0][2]	O	Extended external bus address output (multiplexed with access master output)	
		GPIO	I/O	General-purpose I/O	
	PK[3:0]	ADDR[19:16] mux IQSTAT[3:0][2]	O	Extended external bus address output (multiplexed with instruction pipe status bits)	
		GPIO	I/O	General-purpose I/O	
T	PT[7:0]	IOC[7:0]	I/O	Enhanced Capture Timer Channels 7–0 input/output	GPIO
		GPIO	I/O	General-purpose I/O	
S	PS7	$\overline{\text{SS0}}$	I/O	Serial Peripheral Interface 0 slave select output in master mode, input in slave mode or master mode.	GPIO
		GPIO	I/O	General-purpose I/O	
	PS6	SCK0	I/O	Serial Peripheral Interface 0 serial clock pin	
		GPIO	I/O	General-purpose I/O	
	PS5	MOSI0	I/O	Serial Peripheral Interface 0 master out/slave in pin	
		GPIO	I/O	General-purpose I/O	
	PS4	MISO0	I/O	Serial Peripheral Interface 0 master in/slave out pin	
		GPIO	I/O	General-purpose I/O	
	PS3	TXD1	O	Serial Communication Interface 1 transmit pin	
		GPIO	I/O	General-purpose I/O	
	PS2	RXD1	I	Serial Communication Interface 1 receive pin	
		GPIO	I/O	General-purpose I/O	
	PS1	TXD0	O	Serial Communication Interface 0 transmit pin	
		GPIO	I/O	General-purpose I/O	
	PS0	RXD0	I	Serial Communication Interface 0 receive pin	
		GPIO	I/O	General-purpose I/O	

Table 22-1. Pin Functions and Priorities (Sheet 4 of 7)

Port	Pin Name	Pin Function and Priority	I/O	Description	Pin Function after Reset
M	PM7	TXCAN3	O	MSCAN3 transmit pin	GPIO
		TXCAN4	O	MSCAN4 transmit pin	
		TXD3	O	Serial Communication Interface 3 transmit pin	
		GPIO	I/O	General-purpose I/O	
	PM6	RXCAN3	I	MSCAN3 receive pin	
		RXCAN4	I	MSCAN4 receive pin	
		RXD3	I	Serial Communication Interface 3 receive pin	
		GPIO	I/O	General-purpose I/O	
	PM5	TXCAN2	O	MSCAN2 transmit pin	
		TXCAN0	O	MSCAN0 transmit pin	
		TXCAN4	O	MSCAN4 transmit pin	
		SCK0	I/O	Serial Peripheral Interface 0 serial clock pin *If CAN0 is routed to PM[3:2] the SPI0 can still be used in bidirectional master mode.*	
		GPIO	I/O	General-purpose I/O	
	PM4	RXCAN2	I	MSCAN2 receive pin	
		RXCAN0	I	MSCAN0 receive pin	
		RXCAN4	I	MSCAN4 receive pin	
		MOSI0	I/O	Serial Peripheral Interface 0 master out/slave in pin *If CAN0 is routed to PM[3:2] the SPI0 can still be used in bidirectional master mode.*	
		GPIO	I/O	General-purpose I/O	
	PM3	TXCAN1	O	MSCAN1 transmit pin	
		TXCAN0	O	MSCAN0 transmit pin	
		$\overline{SS0}$	I/O	Serial Peripheral Interface 0 slave select output in master mode, input for slave mode or master mode.	
		GPIO	I/O	General-purpose I/O	
	PM2	RXCAN1	I	MSCAN1 receive pin	
		RXCAN0	I	MSCAN0 receive pin	
		MISO0	I/O	Serial Peripheral Interface 0 master in/slave out pin	
		GPIO	I/O	General-purpose I/O	
	PM1	TXCAN0	O	MSCAN0 transmit pin	
		GPIO	I/O	General-purpose I/O	
	PM0	RXCAN0	I	MSCAN0 receive pin	
		GPIO	I/O	General-purpose I/O	

Table 22-1. Pin Functions and Priorities (Sheet 5 of 7)

Port	Pin Name	Pin Function and Priority	I/O	Description	Pin Function after Reset
P	PP7	PWM7	I/O	Pulse Width Modulator input/output channel 7	GPIO
		SCK2	I/O	Serial Peripheral Interface 2 serial clock pin	
		GPIO/KWP7	I/O	General-purpose I/O with interrupt	
	PP6	PWM6	O	Pulse Width Modulator output channel 6	
		$\overline{SS2}$	I/O	Serial Peripheral Interface 2 slave select output in master mode, input for slave mode or master mode.	
		GPIO/KWP6	I/O	General-purpose I/O with interrupt	
	PP5	PWM5	O	Pulse Width Modulator output channel 5	
		MOSI2	I/O	Serial Peripheral Interface 2 master out/slave in pin	
		GPIO/KWP5	I/O	General-purpose I/O with interrupt	
	PP4	PWM4	O	Pulse Width Modulator output channel 4	
		MISO2	I/O	Serial Peripheral Interface 2 master in/slave out pin	
		GPIO/KWP4	I/O	General-purpose I/O with interrupt	
	PP3	PWM3	O	Pulse Width Modulator output channel 3	
		$\overline{SS1}$	I/O	Serial Peripheral Interface 1 slave select output in master mode, input for slave mode or master mode.	
		GPIO/KWP3	I/O	General-purpose I/O with interrupt	
	PP2	PWM2	O	Pulse Width Modulator output channel 2	
		SCK1	I/O	Serial Peripheral Interface 1 serial clock pin	
		GPIO/KWP2	I/O	General-purpose I/O with interrupt	
	PP1	PWM1	O	Pulse Width Modulator output channel 1	
		MOSI1	I/O	Serial Peripheral Interface 1 master out/slave in pin	
		GPIO/KWP1	I/O	General-purpose I/O with interrupt	
	PP0	PWM0	O	Pulse Width Modulator output channel 0	
		MISO1	I/O	Serial Peripheral Interface 1 master in/slave out pin	
		GPIO/KWP0	I/O	General-purpose I/O with interrupt	

Table 22-1. Pin Functions and Priorities (Sheet 6 of 7)

Port	Pin Name	Pin Function and Priority	I/O	Description	Pin Function after Reset
H	PH7	$\overline{SS2}$	I/O	Serial Peripheral Interface 2 slave select output in master mode, input for slave mode or master mode	GPIO
		TXD5	O	Serial Communication Interface 5 transmit pin	
		GPIO/KWH7	I/O	General-purpose I/O with interrupt	
	PH6	SCK2	I/O	Serial Peripheral Interface 2 serial clock pin	
		RXD5	I	Serial Communication Interface 5 receive pin	
		GPIO/KWH6	I/O	General-purpose I/O with interrupt	
	PH5	MOSI2	I/O	Serial Peripheral Interface 2 master out/slave in pin	
		TXD4	O	Serial Communication Interface 4 transmit pin	
		GPIO/KWH5	I/O	General-purpose I/O with interrupt	
	PH4	MISO2	I/O	Serial Peripheral Interface 2 master in/slave out pin	
		RXD4	I	Serial Communication Interface 4 receive pin	
		GPIO/KWH4	I/O	General-purpose I/O with interrupt	
	PH3	$\overline{SS1}$	I/O	Serial Peripheral Interface 1 slave select output in master mode, input for slave mode or master mode.	
		GPIO/KWH3	I/O	General-purpose I/O with interrupt	
	PH2	SCK1	I/O	Serial Peripheral Interface 1 serial clock pin	
		GPIO/KWH2	I/O	General-purpose I/O with interrupt	
	PH1	MOSI1	I/O	Serial Peripheral Interface 1 master out/slave in pin	
		GPIO/KWH1	I/O	General-purpose I/O with interrupt	
	PH0	MISO1	I/O	Serial Peripheral Interface 1 master in/slave out pin	
		GPIO/KWH0	I/O	General-purpose I/O with interrupt	

Table 22-1. Pin Functions and Priorities (Sheet 7 of 7)

Port	Pin Name	Pin Function and Priority	I/O	Description	Pin Function after Reset
J	PJ7	TXCAN4	O	MSCAN4 transmit pin	GPIO
		SCL0	O	Inter Integrated Circuit 0 serial clock line	
		TXCAN0	O	MSCAN0 transmit pin	
		GPIO/KWJ7	I/O	General-purpose I/O with interrupt	
	PJ6	RXCAN4	I	MSCAN4 receive pin	
		SDA0	I/O	Inter Integrated Circuit 0 serial data line	
		RXCAN0	I	MSCAN0 receive pin	
		GPIO/KWJ6	I/O	General-purpose I/O with interrupt	
	PJ5	SCL1	O	Inter Integrated Circuit 1 serial clock line	
		$\overline{CS2}$	O	Chip select 2	
		GPIO/KWJ7	I/O	General-purpose I/O with interrupt	
	PJ4	SDA1	I/O	Inter Integrated Circuit 1 serial data line	
		$\overline{CS0}$	O	Chip select 0	
		GPIO/KWJ6	I/O	General-purpose I/O with interrupt	
	PJ2	$\overline{CS1}$	O	Chip select 1	
		GPIO/KWJ2	I/O	General-purpose I/O with interrupt	
	PJ1	TXD2	O	Serial Communication Interface 2 transmit pin	
		GPIO/KWJ1	I/O	General-purpose I/O with interrupt	
	PJ0	RXD2	I	Serial Communication Interface 2 receive pin	
		$\overline{CS3}$	O	Chip select 3	
		GPIO/KWJ0	I/O	General-purpose I/O with interrupt	
AD0	PAD[07:00]	GPIO	I/O	General-purpose I/O	GPIO
		AN[7:0]	I	ATD0 analog inputs	
AD1	PAD[23:08]	GPIO	I/O	General-purpose I/O	GPIO
		AN[15:0]	I	ATD1 analog inputs	

1 Function active when $\overline{RESET}$ asserted.

2 Only available in emulation modes or in Special Test Mode with IVIS on.

3 Refer also to Table 22-70 and S12X_EBI section.

22.3 Memory Map and Register Definition

This section provides a detailed description of all PIM registers.

22.3.1 Module Memory Map

Table 22-2 shows the register map of the port integration module.

Table 22-2. PIM Memory Map (Sheet 1 of 3)

Address	Use	Access
0x0000	Port A Data Register (PORTA)	Read / Write
0x0001	Port B Data Register (PORTB)	Read / Write
0x0002	Port A Data Direction Register (DDRA)	Read / Write
0x0003	Port B Data Direction Register (DDRB)	Read / Write
0x0004	Port C Data Register (PORTC)	Read / Write
0x0005	Port D Data Register (PORTD)	Read / Write
0x0006	Port C Data Direction Register (DDRC)	Read / Write
0x0007	Port D Data Direction Register (DDRD)	Read / Write
0x0008	Port E Data Register (PORTE)	Read / Write[1]
0x0009	Port E Data Direction Register (DDRE)	Read / Write[1]
0x000A : 0x000B	Non-PIM Address Range	—
0x000C	Pull-up Up Control Register (PUCR)	Read / Write[1]
0x000D	Reduced Drive Register (RDRIV)	Read / Write[1]
0x000E : 0x001B	Non-PIM Address Range	—
0x001C	ECLK Control Register (ECLKCTL)	Read / Write[1]
0x001D	PIM Reserved	—
0x001E	IRQ Control Register (IRQCR)	Read / Write[1]
0x001F	PIM Reserved	—
0x0020 : 0x0031	Non-PIM Address Range	—
0x0032	Port K Data Register (PORTK)	Read / Write
0x0033	Port K Data Direction Register (DDRK)	Read / Write
0x0034 : 0x023F	Non-PIM Address Range	—
0x0240	Port T Data Register (PTT)	Read / Write

Table 22-2. PIM Memory Map (Sheet 2 of 3)

Address	Use	Access
0x0241	Port T Input Register (PTIT)	Read
0x0242	Port T Data Direction Register (DDRT)	Read / Write
0x0243	Port T Reduced Drive Register (RDRT)	Read / Write
0x0244	Port T Pull Device Enable Register (PERT)	Read / Write
0x0245	Port T Polarity Select Register (PPST)	Read / Write
0x0246	Reserved	—
0x0247	Reserved	—
0x0248	Port S Data Register (PTS)	Read / Write
0x0249	Port S Input Register (PTIS)	Read
0x024A	Port S Data Direction Register (DDRS)	Read / Write
0x024B	Port S Reduced Drive Register (RDRS)	Read / Write
0x024C	Port S Pull Device Enable Register (PERS)	Read / Write
0x024D	Port S Polarity Select Register (PPSS)	Read / Write
0x024E	Port S Wired-OR Mode Register (WOMS)	Read / Write
0x024F	Reserved	—
0x0250	Port M Data Register (PTM)	Read / Write
0x0251	Port M Input Register (PTIM)	Read
0x0252	Port M Data Direction Register (DDRM)	Read / Write
0x0253	Port M Reduced Drive Register (RDRM)	Read / Write
0x0254	Port M Pull Device Enable Register (PERM)	Read / Write
0x0255	Port M Polarity Select Register (PPSM)	Read / Write
0x0256	Port M Wired-OR Mode Register (WOMM)	Read / Write
0x0257	Module Routing Register (MODRR)	Read / Write
0x0258	Port P Data Register (PTP)	Read / Write
0x0259	Port P Input Register (PTIP)	Read
0x025A	Port P Data Direction Register (DDRP)	Read / Write
0x025B	Port P Reduced Drive Register (RDRP)	Read / Write
0x025C	Port P Pull Device Enable Register (PERP)	Read / Write
0x025D	Port P Polarity Select Register (PPSP)	Read / Write
0x025E	Port P Interrupt Enable Register (PIEP)	Read / Write
0x025F	Port P Interrupt Flag Register (PIFP)	Read / Write
0x0260	Port H Data Register (PTH)	Read / Write
0x0261	Port H Input Register (PTIH)	Read
0x0262	Port H Data Direction Register (DDRH)	Read / Write
0x0263	Port H Reduced Drive Register (RDRH)	Read / Write

Table 22-2. PIM Memory Map (Sheet 3 of 3)

Address	Use	Access
0x0264	Port H Pull Device Enable Register (PERH)	Read / Write
0x0265	Port H Polarity Select Register (PPSH)	Read / Write
0x0266	Port H Interrupt Enable Register (PIEH)	Read / Write
0x0267	Port H Interrupt Flag Register (PIFH)	Read / Write
0x0268	Port J Data Register (PTJ)	Read / Write[1]
0x0269	Port J Input Register (PTIJ)	Read
0x026A	Port J Data Direction Register (DDRJ)	Read / Write[1]
0x026B	Port J Reduced Drive Register (RDRJ)	Read / Write[1]
0x026C	Port J Pull Device Enable Register (PERJ)	Read / Write[1]
0x026D	Port J Polarity Select Register (PPSJ)	Read / Write[1]
0x026E	Port J Interrupt Enable Register (PIEJ)	Read / Write[1]
0x026F	Port J Interrupt Flag Register (PIFJ)	Read / Write[1]
0x0270	Reserved	—
0x0271	Port AD0 Data Register 1 (PT1AD0)	Read / Write
0x0272	Reserved	—
0x0273	Port AD0 Data Direction Register 1 (DDR1AD0)	Read / Write
0x0274	Reserved	—
0x0275	Port AD0 Reduced Drive Register 1 (RDR1AD0)	Read / Write
0x0276	Reserved	—
0x0277	Port AD0 Pull Up Enable Register 1 (PER1AD0)	Read / Write
0x0278	Port AD1 Data Register 0 (PT0AD1)	Read / Write
0x0279	Port AD1 Data Register 1 (PT1AD1)	Read / Write
0x027A	Port AD1 Data Direction Register 0 (DDR0AD1)	Read / Write
0x027B	Port AD1 Data Direction Register 1 (DDR1AD1)	Read / Write
0x027C	Port AD1 Reduced Drive Register 0 (RDR0AD1)	Read / Write
0x027D	Port AD1 Reduced Drive Register 1 (RDR1AD1)	Read / Write
0x027E	Port AD1 Pull Up Enable Register 0 (PER0AD1)	Read / Write
0x027F	Port AD1 Pull Up Enable Register 1 (PER1AD1)	Read / Write

[1] Write access not applicable for one or more register bits. Refer to Section 22.3.2, “Register Descriptions”.

22.3.2 Register Descriptions

Table 22-3 summarizes the effect on the various configuration bits, data direction (DDR), output level (IO), reduced drive (RDR), pull enable (PE), pull select (PS), and interrupt enable (IE) for the ports.

The configuration bit PS is used for two purposes:

1. Configure the sensitive interrupt edge (rising or falling), if interrupt is enabled.
2. Select either a pull-up or pull-down device if PE is active.

Table 22-3. Pin Configuration Summary

DDR	IO	RDR	PE	PS[1]	IE[2]	Function	Pull Device	Interrupt
0	x	x	0	x	0	Input	Disabled	Disabled
0	x	x	1	0	0	Input	Pull Up	Disabled
0	x	x	1	1	0	Input	Pull Down	Disabled
0	x	x	0	0	1	Input	Disabled	Falling edge
0	x	x	0	1	1	Input	Disabled	Rising edge
0	x	x	1	0	1	Input	Pull Up	Falling edge
0	x	x	1	1	1	Input	Pull Down	Rising edge
1	0	0	x	x	0	Output, full drive to 0	Disabled	Disabled
1	1	0	x	x	0	Output, full drive to 1	Disabled	Disabled
1	0	1	x	x	0	Output, reduced drive to 0	Disabled	Disabled
1	1	1	x	x	0	Output, reduced drive to 1	Disabled	Disabled
1	0	0	x	0	1	Output, full drive to 0	Disabled	Falling edge
1	1	0	x	1	1	Output, full drive to 1	Disabled	Rising edge
1	0	1	x	0	1	Output, reduced drive to 0	Disabled	Falling edge
1	1	1	x	1	1	Output, reduced drive to 1	Disabled	Rising edge

[1] Always “0” on Port A, B, C, D, E, K, AD0, and AD1.

[2] Applicable only on Port P, H, and J.

NOTE

All register bits in this module are completely synchronous to internal clocks during a register read.

Register Name		Bit 7	6	5	4	3	2	1	Bit 0
PORTA	R/W	PA7	PA6	PA5	PA4	PA3	PA2	PA1	PA0
PORTB	R/W	PB7	PB6	PB5	PB4	PB3	PB2	PB1	PB0
DDRA	R/W	DDRA7	DDRA6	DDRA5	DDRA4	DDRA3	DDRA2	DDRA1	DDRA0
DDRB	R/W	DDRB7	DDRB6	DDRB5	DDRB4	DDRB3	DDRB2	DDRB1	DDRB0
PORTC	R/W	PC7	PC6	PC5	PC4	PC3	PC2	PC1	PC0
PORTD	R/W	PD7	PD6	PD5	PD4	PD3	PD2	PD1	PD0
DDRC	R/W	DDRC7	DDRC6	DDRC5	DDRC4	DDRC3	DDRC2	DDRC1	DDRC0
DDRD	R/W	DDRD7	DDRD6	DDRD5	DDRD4	DDRD3	DDRD2	DDRD1	DDRD0
PORTE	R/W	PE7	PE6	PE5	PE4	PE3	PE2	PE1	PE0
DDRE	R/W	DDRE7	DDRE6	DDRE5	DDRE4	DDRE3	DDRE2	0	0
Non-PIM Address Range	R/W	Non-PIM Address Range							
PUCR	R/W	PUPKE	BKPUE	0	PUPEE	PUPDE	PUPCE	PUPBE	PUPAE
RDRIV	R/W	RDPK	0	0	RDPE	RDPD	RDPC	RDPB	RDPA
Non-PIM Address Range	R/W	Non-PIM Address Range							

= Unimplemented or Reserved

Figure 22-2. PIM Register Summary (Sheet 1 of 6)

Register Name		Bit 7	6	5	4	3	2	1	Bit 0
ECLKCTL	R	NECLK	NCLKX2	0	0	0	0	EDIV1	EDIV0
	W								
Reserved	R	0	0	0	0	0	0	0	0
	W								
IRQCR	R	IRQE	IRQEN	0	0	0	0	0	0
	W								
Reserved	R	0	0	0	0	0	0	0	0
	W								
Non-PIM Address Range	R/W	Non-PIM Address Range							
PORTK	R	PK7	PK6	PK5	PK4	PK3	PK2	PK1	PK0
	W								
DDRK	R	DDRK7	DDRK6	DDRK5	DDRK4	DDRK3	DDRK2	DDRK1	DDRK0
	W								
Non-PIM Address Range	R/W	Non-PIM Address Range							
PTT	R	PTT7	PTT6	PTT5	PTT4	PTT3	PTT2	PTT1	PTT0
	W								
PTIT	R	PTIT7	PTIT6	PTIT5	PTIT4	PTIT3	PTIT2	PTIT1	PTIT0
	W								
DDRT	R	DDRT7	DDRT6	DDRT5	DDRT4	DDRT3	DDRT2	DDRT1	DDRT0
	W								
RDRT	R	RDRT7	RDRT6	RDRT5	RDRT4	RDRT3	RDRT2	RDRT1	RDRT0
	W								
PERT	R	PERT7	PERT6	PERT5	PERT4	PERT3	PERT2	PERT1	PERT0
	W								
PPST	R	PPST7	PPST6	PPST5	PPST4	PPST3	PPST2	PPST1	PPST0
	W								

= Unimplemented or Reserved

Figure 22-2. PIM Register Summary (Sheet 2 of 6)

Register Name		Bit 7	6	5	4	3	2	1	Bit 0
Reserved	R	0	0	0	0	0	0	0	0
	W								
Reserved	R	0	0	0	0	0	0	0	0
	W								
PTS	R/W	PTS7	PTS6	PTS5	PTS4	PTS3	PTS2	PTS1	PTS0
PTIS	R	PTIS7	PTIS6	PTIS5	PTIS4	PTIS3	PTIS2	PTIS1	PTIS0
	W								
DDRS	R/W	DDRS7	DDRS6	DDRS5	DDRS4	DDRS3	DDRS2	DDRS1	DDRS0
RDRS	R/W	RDRS7	RDRS6	RDRS5	RDRS4	RDRS3	RDRS2	RDRS1	RDRS0
PERS	R/W	PERS7	PERS6	PERS5	PERS4	PERS3	PERS2	PERS1	PERS0
PPSS	R/W	PPSS7	PPSS6	PPSS5	PPSS4	PPSS3	PPSS2	PPSS1	PPSS0
WOMS	R/W	WOMS7	WOMS6	WOMS5	WOMS4	WOMS3	WOMS2	WOMS1	WOMS0
Reserved	R	0	0	0	0	0	0	0	0
	W								
PTM	R/W	PTM7	PTM6	PTM5	PTM4	PTM3	PTM2	PTM1	PTM0
PTIM	R	PTIM7	PTIM6	PTIM5	PTIM4	PTIM3	PTIM2	PTIM1	PTIM0
	W								
DDRM	R/W	DDRM7	DDRM6	DDRM5	DDRM4	DDRM3	DDRM2	DDRM1	DDRM0
RDRM	R/W	RDRM7	RDRM6	RDRM5	RDRM4	RDRM3	RDRM2	RDRM1	RDRM0
PERM	R/W	PERM7	PERM6	PERM5	PERM4	PERM3	PERM2	PERM1	PERM0

= Unimplemented or Reserved

Figure 22-2. PIM Register Summary (Sheet 3 of 6)

Register Name		Bit 7	6	5	4	3	2	1	Bit 0
PPSM	R/W	PPSM7	PPSM6	PPSM5	PPSM4	PPSM3	PPSM2	PPSM1	PPSM0
WOMM	R/W	WOMM7	WOMM6	WOMM5	WOMM4	WOMM3	WOMM2	WOMM1	WOMM0
MODRR	R	0	MODRR6	MODRR5	MODRR4	MODRR3	MODRR2	MODRR1	MODRR0
	W								
PTP	R/W	PTP7	PTP6	PTP5	PTP4	PTP3	PTP2	PTP1	PTP0
PTIP	R	PTIP7	PTIP6	PTIP5	PTIP4	PTIP3	PTIP2	PTIP1	PTIP0
	W								
DDRP	R/W	DDRP7	DDRP6	DDRP5	DDRP4	DDRP3	DDRP2	DDRP1	DDRP0
RDRP	R/W	RDRP7	RDRP6	RDRP5	RDRP4	RDRP3	RDRP2	RDRP1	RDRP0
PERP	R/W	PERP7	PERP6	PERP5	PERP4	PERP3	PERP2	PERP1	PERP0
PPSP	R/W	PPSP7	PPSP6	PPSP5	PPSP4	PPSP3	PPSP2	PPSP1	PPSP0
PIEP	R/W	PIEP7	PIEP6	PIEP5	PIEP4	PIEP3	PIEP2	PIEP1	PIEP0
PIFP	R/W	PIFP7	PIFP6	PIFP5	PIFP4	PIFP3	PIFP2	PIFP1	PIFP0
PTH	R/W	PTH7	PTH6	PTH5	PTH4	PTH3	PTH2	PTH1	PTH0
PTIH	R	PTIH7	PTIH6	PTIH5	PTIH4	PTIH3	PTIH2	PTIH1	PTIH0
	W								
DDRH	R/W	DDRH7	DDRH6	DDRH5	DDRH4	DDRH3	DDRH2	DDRH1	DDRH0
RDRH	R/W	RDRH7	RDRH6	RDRH5	RDRH4	RDRH3	RDRH2	RDRH1	RDRH0

= Unimplemented or Reserved

Figure 22-2. PIM Register Summary (Sheet 4 of 6)

Register Name		Bit 7	6	5	4	3	2	1	Bit 0
PERH	R	PERH7	PERH6	PERH5	PERH4	PERH3	PERH2	PERH1	PERH0
	W								
PPSH	R	PPSH7	PPSH6	PPSH5	PPSH4	PPSH3	PPSH2	PPSH1	PPSH0
	W								
PIEH	R	PIEH7	PIEH6	PIEH5	PIEH4	PIEH3	PIEH2	PIEH1	PIEH0
	W								
PIFH	R	PIFH7	PIFH6	PIFH5	PIFH4	PIFH3	PIFH2	PIFH1	PIFH0
	W								
PTJ	R	PTJ7	PTJ6	PTJ5	PTJ4	0	PTJ2	PTJ1	PTJ0
	W								
PTIJ	R	PTIJ7	PTIJ6	PTIJ5	PTIJ4	0	PTIJ2	PTIJ1	PTIJ0
	W								
DDRJ	R	DDRJ7	DDRJ6	DDRJ5	DDRJ4	0	DDRJ2	DDRJ1	DDRJ0
	W								
RDRJ	R	RDRJ7	RDRJ6	RDRJ5	RDRJ4	0	RDRJ2	RDRJ1	RDRJ0
	W								
PERJ	R	PERJ7	PERJ6	PERJ5	PERJ4	0	PERJ2	PERJ1	PERJ0
	W								
PPSJ	R	PPSJ7	PPSJ6	PPSJ5	PPSJ4	0	PPSJ2	PPSJ1	PPSJ0
	W								
PIEJ	R	PIEJ7	PIEJ6	PIEJ5	PIEJ4	0	PIEJ2	PIEJ1	PIEJ0
	W								
PIFJ	R	PPSJ7	PPSJ6	PPSJ5	PPSJ4	0	PPSJ2	PPSJ1	PPSJ0
	W								
Reserved	R	0	0	0	0	0	0	0	0
	W								
PT1AD0	R	PT1AD07	PT1AD06	PT1AD05	PT1AD04	PT1AD03	PT1AD02	PT1AD01	PT1AD00
	W								
Reserved	R	0	0	0	0	0	0	0	0
	W								

= Unimplemented or Reserved

Figure 22-2. PIM Register Summary (Sheet 5 of 6)

Register Name		Bit 7	6	5	4	3	2	1	Bit 0
Name	R/W	DDR1AD07	DDR1AD06	DDR1AD05	DDR1AD04	DDR1AD03	DDR1AD02	DDR1AD01	DDR1AD00
Reserved	R	0	0	0	0	0	0	0	0
	W								
RDR1AD0	R/W	RDR1AD07	RDR1AD06	RDR1AD05	RDR1AD04	RDR1AD03	RDR1AD02	RDR1AD01	RDR1AD00
Reserved	R	0	0	0	0	0	0	0	0
	W								
PER1AD0	R/W	PER1AD07	PER1AD06	PER1AD05	PER1AD04	PER1AD03	PER1AD02	PER1AD01	PER1AD00
PT0AD1	R/W	PT0AD123	PT0AD122	PT0AD121	PT0AD120	PT0AD119	PT0AD118	PT0AD117	PT0AD116
PT1AD1	R/W	PT1AD115	PT1AD114	PT1AD113	PT1AD112	PT1AD111	PT1AD110	PT1AD19	PT1AD18
DDR0AD1	R/W	DDR0AD123	DDR0AD122	DDR0AD121	DDR0AD120	DDR0AD119	DDR0AD118	DDR0AD117	DDR0AD116
DDR1AD1	R/W	DDR1AD115	DDR1AD114	DDR1AD113	DDR1AD112	DDR1AD111	DDR1AD110	DDR1AD19	DDR1AD18
RDR0AD1	R/W	RDR0AD123	RDR0AD122	RDR0AD121	RDR0AD120	RDR0AD119	RDR0AD118	RDR0AD117	RDR0AD116
RDR1AD1	R/W	RDR1AD115	RDR1AD114	RDR1AD113	RDR1AD112	RDR1AD111	RDR1AD110	RDR1AD19	RDR1AD18
PER0AD1	R/W	PER0AD123	PER0AD122	PER0AD121	PER0AD120	PER0AD119	PER0AD118	PER0AD117	PER0AD116
PER1AD1	R/W	PER1AD115	PER1AD114	PER1AD113	PER1AD112	PER1AD111	PER1AD110	PER1AD19	PER1AD18

= Unimplemented or Reserved

Figure 22-2. PIM Register Summary (Sheet 6 of 6)

22.3.2.1 Port A Data Register (PORTA)

	7	6	5	4	3	2	1	0
R W	PA7	PA6	PA5	PA4	PA3	PA2	PA1	PA0
Alt. Function	ADDR15 mux IVD15	ADDR14 mux IVD14	ADDR13 mux IVD13	ADDR12 mux IVD12	ADDR11 mux IVD11	ADDR10 mux IVD10	ADDR9 mux IVD9	ADDR8 mux IVD8
Reset	0	0	0	0	0	0	0	0

Figure 22-3. Port A Data Register (PORTA)

Read: Anytime. In emulation modes, read operations will return the data from the external bus, in all other modes the data source is depending on the data direction value.

Write: Anytime. In emulation modes, write operations will also be directed to the external bus.

Table 22-4. PORTA Field Descriptions

Field	Description
7–0 PA[7:0]	Port A — Port A pins 7–0 are associated with address outputs ADDR15 through ADDR8 respectively in expanded modes. When this port is not used for external addresses, these pins can be used as general purpose I/O. If the data direction bits of the associated I/O pins are set to logic level “1”, a read returns the value of the port register, otherwise the buffered pin input state is read.

22.3.2.2 Port B Data Register (PORTB)

	7	6	5	4	3	2	1	0
R W	PB7	PB6	PB5	PB4	PB3	PB2	PB1	PB0
Alt. Function	ADDR7 mux IVD7	ADDR6 mux IVD6	ADDR5 mux IVD5	ADDR4 mux IVD4	ADDR3 mux IVD3	ADDR2 mux IVD2	ADDR1 mux IVD1	ADDR0 mux IVD0 or $\overline{\text{UDS}}$
Reset	0	0	0	0	0	0	0	0

Figure 22-4. Port B Data Register (PORTB)

Read: Anytime. In emulation modes, read operations will return the data from the external bus, in all other modes the data source is depending on the data direction value.

Write: Anytime. In emulation modes, write operations will also be directed to the external bus.

Table 22-5. PORTB Field Descriptions

Field	Description
7–0 PB[7:0]	**Port B** — Port B pins 7–0 are associated with address outputs ADDR7 through ADDR1 respectively in expanded modes. Pin 0 is associated with output ADDR0 in emulation modes and special test mode and with Upper Data Select ($\overline{UDS}$) in normal expanded mode. When this port is not used for external addresses, these pins can be used as general purpose I/O. If the data direction bits of the associated I/O pins are set to logic level “1”, a read returns the value of the port register, otherwise the buffered pin input state is read.

22.3.2.3 Port A Data Direction Register (DDRA)

	7	6	5	4	3	2	1	0
R W	DDRA7	DDRA6	DDRA5	DDRA4	DDRA3	DDRA2	DDRA1	DDRA0
Reset	0	0	0	0	0	0	0	0

Figure 22-5. Port A Data Direction Register (DDRA)

Read: Anytime. In emulation modes, read operations will return the data from the external bus, in all other modes the data are read from this register.

Write: Anytime. In emulation modes, write operations will also be directed to the external bus.

Table 22-6. DDRA Field Descriptions

Field	Description
7–0 DDRA[7:0]	Data Direction Port A — This register controls the data direction for port A. When Port A is operating as a general purpose I/O port, DDRA determines whether each pin is an input or output. A logic level “1” causes the associated port pin to be an output and a logic level “0” causes the associated pin to be a high-impedance input. 0 Associated pin is configured as input. 1 Associated pin is configured as output. **Note:** Due to internal synchronization circuits, it can take up to 2 bus clock cycles until the correct value is read on PORTA after changing the DDRA register.

22.3.2.4 Port B Data Direction Register (DDRB)

	7	6	5	4	3	2	1	0
R W	DDRB7	DDRB6	DDRB5	DDRB4	DDRB3	DDRB2	DDRB1	DDRB0
Reset	0	0	0	0	0	0	0	0

Figure 22-6. Port B Data Direction Register (DDRB)

Read: Anytime. In emulation modes, read operations will return the data from the external bus, in all other modes the data are read from this register.

Write: Anytime. In emulation modes, write operations will also be directed to the external bus.

Table 22-7. DDRB Field Descriptions

Field	Description
7–0 DDRB[7:0]	Data Direction Port B — This register controls the data direction for port B. When Port B is operating as a general purpose I/O port, DDRB determines whether each pin is an input or output. A logic level “1” causes the associated port pin to be an output and a logic level “0” causes the associated pin to be a high-impedance input. 0 Associated pin is configured as input. 1 Associated pin is configured as output. **Note:** Due to internal synchronization circuits, it can take up to 2 bus clock cycles until the correct value is read on PORTB after changing the DDRB register.

22.3.2.5 Port C Data Register (PORTC)

	7	6	5	4	3	2	1	0
R W	PC7	PC6	PC5	PC4	PC3	PC2	PC1	PC0
Exp.:	DATA15	DATA14	DATA13	DATA12	DATA11	DATA10	DATA9	DATA8
Reset	0	0	0	0	0	0	0	0

Figure 22-7. Port C Data Register (PORTC)

Read: Anytime. In emulation modes, read operations will return the data from the external bus, in all other modes the data source is depending on the data direction value.

Write: Anytime. In emulation modes, write operations will also be directed to the external bus.

Table 22-8. PORTC Field Descriptions

Field	Description
7–0 PC[7:0]	Port C — Port C pins 7–0 are associated with data I/O lines DATA15 through DATA8 respectively in expanded modes. When this port is not used for external data, these pins can be used as general purpose I/O. If the data direction bits of the associated I/O pins are set to logic level “1”, a read returns the value of the port register, otherwise the buffered pin input state is read.

22.3.2.6 Port D Data Register (PORTD)

	7	6	5	4	3	2	1	0
R W	PD7	PD6	PD5	PD4	PD3	PD2	PD1	PD0
Exp.:	DATA7	DATA6	DATA5	DATA4	DATA3	DATA2	DATA1	DATA0
Reset	0	0	0	0	0	0	0	0

Figure 22-8. Port D Data Register (PORTD)

Read: Anytime. In emulation modes, read operations will return the data from the external bus, in all other modes the data source is depending on the data direction value.

Write: Anytime. In emulation modes, write operations will also be directed to the external bus.

Table 22-9. PORTD Field Descriptions

Field	Description
7–0 PD[7:0]	Port D — Port D pins 7–0 are associated with data I/O lines DATA7 through DATA0 respectively in expanded modes. When this port is not used for external data, these pins can be used as general purpose I/O. — If the data direction bits of the associated I/O pins are set to logic level “1”, a read returns the value of the port register, otherwise the buffered pin input state is read.

22.3.2.7 Port C Data Direction Register (DDRC)

	7	6	5	4	3	2	1	0
R W	DDRC7	DDRC6	DDRC5	DDRC4	DDRC3	DDRC2	DDRC1	DDRC0
Reset	0	0	0	0	0	0	0	0

Figure 22-9. Port C Data Direction Register (DDRC)

Read: Anytime. In emulation modes, read operations will return the data from the external bus, in all other modes the data are read from this register.

Write: Anytime. In emulation modes, write operations will also be directed to the external bus.

Table 22-10. DDRC Field Descriptions

Field	Description
7–0 DDRC[7:0]	Data Direction Port C — This register controls the data direction for port C. When Port C is operating as a general purpose I/O port, DDRC determines whether each pin is an input or output. A logic level “1” causes the associated port pin to be an output and a logic level “0” causes the associated pin to be a high-impedance input. 0 Associated pin is configured as input. 1 Associated pin is configured as output. **Note:** Due to internal synchronization circuits, it can take up to 2 bus clock cycles until the correct value is read on PORTC after changing the DDRC register.

22.3.2.8 Port D Data Direction Register (DDRD)

	7	6	5	4	3	2	1	0
R W	DDRD7	DDRD6	DDRD5	DDRD4	DDRD3	DDRD2	DDRD1	DDRD0
Reset	0	0	0	0	0	0	0	0

Figure 22-10. Port D Data Direction Register (DDRD)

Read: Anytime. In emulation modes, read operations will return the data from the external bus, in all other modes the data are read from this register.

Write: Anytime. In emulation modes, write operations will also be directed to the external bus.

Table 22-11. DDRD Field Descriptions

Field	Description
7–0 DDRD[7:0]	Data Direction Port D — This register controls the data direction for port D. When Port D is operating as a general purpose I/O port, DDRD determines whether each pin is an input or output. A logic level “1” causes the associated port pin to be an output and a logic level “0” causes the associated pin to be a high-impedance input. 0 Associated pin is configured as input. 1 Associated pin is configured as output. **Note:** Due to internal synchronization circuits, it can take up to 2 bus clock cycles until the correct value is read on PORTD after changing the DDRD register.

22.3.2.9 Port E Data Register (PORTE)

	7	6	5	4	3	2	1	0
R	PE7	PE6	PE5	PE4	PE3	PE2	PE1	PE0
W								
Alt. Func.	$\overline{XCLKS}$ or ECLKX2	MODB or $\overline{TAGHI}$	MODA or $\overline{RE}$ or $\overline{TAGLO}$	ECLK	EROMCTL or $\overline{LSTRB}$ or $\overline{LDS}$	R/$\overline{W}$ or $\overline{WE}$	$\overline{IRQ}$	$\overline{XIRQ}$
Reset	0	0	0	0	0	0	—[1]	—[1]

= Unimplemented or Reserved

Figure 22-11. Port E Data Register (PORTE)

[1] These registers are reset to zero. Two bus clock cycles after reset release the register values are updated with the associated pin values.

Read: Anytime. In emulation modes, read operations will return the data from the external bus, in all other modes the data source is depending on the data direction value.

Write: Anytime. In emulation modes, write operations will also be directed to the external bus.

Table 22-12. PORTE Field Descriptions

Field	Description
7–0 PE[7:0]	**Port E** — Port E bits 7–0 are associated with external bus control signals and interrupt inputs. These include mode select (MODB, MODA), E clock, double frequency E clock, Instruction Tagging High and Low ($\overline{TAGHI}$, $\overline{TAGLO}$), Read/Write (R/$\overline{W}$), Read Enable and Write Enable ($\overline{RE}$, $\overline{WE}$), Lower Data Select ($\overline{LDS}$), $\overline{IRQ}$, and $\overline{XIRQ}$. When not used for any of these specific functions, Port E pins 7–2 can be used as general purpose I/O and pins 1–0 can be used as general purpose inputs. If the data direction bits of the associated I/O pins are set to logic level “1”, a read returns the value of the port register, otherwise the buffered pin input state is read. Pins 6 and 5 are inputs with enabled pull-down devices while RESET pin is low. Pins 7 and 3 are inputs with enabled pull-up devices while RESET pin is low.

22.3.2.10 Port E Data Direction Register (DDRE)

	7	6	5	4	3	2	1	0
R W	DDRE7	DDRE6	DDRE5	DDRE4	DDRE3	DDRE2	0	0
Reset	0	0	0	0	0	0	0	0

= Unimplemented or Reserved

Figure 22-12. Port E Data Direction Register (DDRE)

Read: Anytime. In emulation modes, read operations will return the data from the external bus, in all other modes the data are read from this register.

Write: Anytime. In emulation modes, write operations will also be directed to the external bus.

Table 22-13. DDRE Field Descriptions

Field	Description
7–0 DDRE[7:2]	Data Direction Port E — his register controls the data direction for port E. When Port E is operating as a general purpose I/O port, DDRE determines whether each pin is an input or output. A logic level “1” causes the associated port pin to be an output and a logic level “0” causes the associated pin to be a high-impedance input. Port E bit 1 (associated with $\overline{IRQ}$) and bit 0 (associated with $\overline{XIRQ}$) cannot be configured as outputs. Port E, bits 1 and 0, can be read regardless of whether the alternate interrupt function is enabled. 0 Associated pin is configured as input. 1 Associated pin is configured as output. **Note:** Due to internal synchronization circuits, it can take up to 2 bus clock cycles until the correct value is read on PORTE after changing the DDRE register.

22.3.2.11 S12X_EBI Ports, BKGD, VREGEN Pin Pull-up Control Register (PUCR)

	7	6	5	4	3	2	1	0
R	PUPKE	BKPUE	0	PUPEE	PUPDE	PUPCE	PUPBE	PUPAE
W								
Reset	1	1	0	1	0	0	0	0

= Unimplemented or Reserved

Figure 22-13. S12X_EBI Ports, BKGD, VREGEN Pin Pull-up Control Register (PUCR)

Read: Anytime in single-chip modes.

Write: Anytime, except BKPUE which is writable in special test mode only.

This register is used to enable pull-up devices for the associated ports A, B, C, D, E, and K. Pull-up devices are assigned on a per-port basis and apply to any pin in the corresponding port that is currently configured as an input.

Table 22-14. PUCR Field Descriptions

Field	Description
7 PUPKE	**Pull-up Port K Enable** 0 Port K pull-up devices are disabled. 1 Enable pull-up devices for Port K input pins.
6 BKPUE	**BKGD and VREGEN Pin Pull-up Enable** 0 BKGD and V_{REGEN} pull-up devices are disabled. 1 Enable pull-up devices on BKGD and V_{REGEN} pins.
4 PUPEE	**Pull-up Port E Enable** 0 Port E pull-up devices on bit 7, 4–0 are disabled. 1 Enable pull-up devices for Port E input pins bits 7, 4–0. **Note:** Bits 5 and 6 of Port E have pull-down devices which are only enabled during reset. This bit has no effect on these pins.
3 PUPDE	**Pull-up Port D Enable** 0 Port D pull-up devices are disabled. 1 Enable pull-up devices for all Port D input pins.
2 PUPCE	**Pull-up Port C Enable** 0 Port C pull-up devices are disabled. 1 Enable pull-up devices for all Port C input pins.
1 PUPBE	**Pull-up Port B Enable** 0 Port B pull-up devices are disabled. 1 Enable pull-up devices for all Port B input pins.
0 PUPAE	**Pull-up Port A Enable** 0 Port A pull-up devices are disabled. 1 Enable pull-up devices for all Port A input pins.

22.3.2.12 S12X_EBI Ports Reduced Drive Register (RDRIV)

	7	6	5	4	3	2	1	0
R	RDPK	0	0	RDPE	RDPD	RDPC	RDPB	RDPA
W								
Reset	0	0	0	0	0	0	0	0

= Unimplemented or Reserved

Figure 22-14. S12X_EBI Ports Reduced Drive Register (RDRIV)

Read: Anytime. In emulation modes, read operations will return the data from the external bus, in all other modes the data are read from this register.

Write: Anytime. In emulation modes, write operations will also be directed to the external bus.

This register is used to select reduced drive for the pins associated with the S12X_EBI ports A, B, C, D, E, and K. If enabled, the pins drive at about 1/6 of the full drive strength. The reduced drive function is independent of which function is being used on a particular pin.

The reduced drive functionality does not take effect on the pins in emulation modes.

Table 22-15. RDRIV Field Descriptions

Field	Description
7 RDPK	**Reduced Drive of Port K** 0 All port K output pins have full drive enabled. 1 All port K output pins have reduced drive enabled.
4 RDPE	**Reduced Drive of Port E** 0 All port E output pins have full drive enabled. 1 All port E output pins have reduced drive enabled.
3 RDPD	**Reduced Drive of Port D** 0 All port D output pins have full drive enabled. 1 All port D output pins have reduced drive enabled.
2 RDPC	**Reduced Drive of Port C** 0 All port C output pins have full drive enabled. 1 All port C output pins have reduced drive enabled.
1 RDPB	**Reduced Drive of Port B** 0 All port B output pins have full drive enabled. 1 All port B output pins have reduced drive enabled.
0 RDPA	**Reduced Drive of Ports A** 0 All Port A output pins have full drive enabled. 1 All port A output pins have reduced drive enabled.

22.3.2.13 ECLK Control Register (ECLKCTL)

	7	6	5	4	3	2	1	0	
R	NECLK	NCLKX2	0	0	0	0	EDIV1	EDIV0	
W									
Reset[1]	Mode Dependent	1	0	0	0	0	0	0	Mode
SS	0	1	0	0	0	0	0	0	Special Single-Chip
ES	1	1	0	0	0	0	0	0	Emulation Single-Chip
ST	0	1	0	0	0	0	0	0	Special Test
EX	0	1	0	0	0	0	0	0	Emulation Expanded
NS	1	1	0	0	0	0	0	0	Normal Single-Chip
NX	0	1	0	0	0	0	0	0	Normal Expanded

= Unimplemented or Reserved

Figure 22-15. ECLK Control Register (ECLKCTL)

[1] Reset values in emulation modes are identical to those of the target mode.

Read: Anytime. In emulation modes, read operations will return the data from the external bus, in all other modes the data are read from this register.

Write: Anytime. In emulation modes, write operations will also be directed to the external bus.

The ECLKCTL register is used to control the availability of the free-running clocks and the free-running clock divider.

Table 22-16. ECLKCTL Field Descriptions

Field	Description
7 NECLK	**No ECLK** — This bit controls the availability of a free-running clock on the ECLK pin. Clock output is always active in emulation modes and if enabled in all other operating modes. 0 ECLK enabled 1 ECLK disabled

Table 22-16. ECLKCTL Field Descriptions (continued)

Field	Description
6 NCLKX2	**No ECLKX2** — This bit controls the availability of a free-running clock on the ECLKX2 pin. This clock has a fixed rate of twice the internal bus clock. Clock output is always active in emulation modes and if enabled in all other operating modes. 0 ECLKX2 is enabled 1 ECLKX2 is disabled
1–0 EDIV[1:0]	**Free-Running ECLK Divider** — These bits determine the rate of the free-running clock on the ECLK pin. The usage of the bits is shown in Table 22-17. Divider is always disabled in emulation modes and active as programmed in all other operating modes.

Table 22-17. Free-Running ECLK Clock Rate

EDIV[1:0]	Rate of Free-Running ECLK
00	ECLK = Bus clock rate
01	ECLK = Bus clock rate divided by 2
10	ECLK = Bus clock rate divided by 3
11	ECLK = Bus clock rate divided by 4

22.3.2.14 IRQ Control Register (IRQCR)

	7	6	5	4	3	2	1	0
R	IRQE	IRQEN	0	0	0	0	0	0
W								
Reset	0	1	0	0	0	0	0	0

= Unimplemented or Reserved

Figure 22-16. IRQ Control Register (IRQCR)

Read: See individual bit descriptions below.

Write: See individual bit descriptions below.

Table 22-18. IRQCR Field Descriptions

Field	Description
7 IRQE	**IRQ Select Edge Sensitive Only** Special modes: Read or write anytime. Normal and emulation modes: Read anytime, write once. 0 $\overline{\text{IRQ}}$ configured for low level recognition. 1 $\overline{\text{IRQ}}$ configured to respond only to falling edges. Falling edges on the $\overline{\text{IRQ}}$ pin will be detected anytime IRQE = 1 and will be cleared only upon a reset or the servicing of the $\overline{\text{IRQ}}$ interrupt.
6 IRQEN	**External IRQ Enable** Read or write anytime. 0 External $\overline{\text{IRQ}}$ pin is disconnected from interrupt logic. 1 External $\overline{\text{IRQ}}$ pin is connected to interrupt logic.

22.3.2.15 Port K Data Register (PORTK)

	7	6	5	4	3	2	1	0
R W	PK7	PK6	PK5	PK4	PK3	PK2	PK1	PK0
Alt. Func.	ROMCTL or $\overline{\text{EWAIT}}$	ADDR22 mux NOACC	ADDR21	ADDR20	ADDR19 mux IQSTAT3	ADDR18 mux IQSTAT2	ADDR17 mux IQSTAT1	ADDR16 mux IQSTAT0
Reset	0	0	0	0	0	0	0	0

Figure 22-17. Port K Data Register (PORTK)

Read: Anytime. In emulation modes, read operations will return the data from the external bus, in all other modes the data source is depending on the data direction value.

Write: Anytime. In emulation modes, write operations will also be directed to the external bus.

Table 22-19. PORTK Field Descriptions

Field	Description
7–0 PK[7:0]	Port K — Port K pins 7–0 are associated with external bus control signals and internal memory expansion emulation pins. These include ADDR22-ADDR16, No-Access (NOACC), External Wait ($\overline{\text{EWAIT}}$) and instruction pipe signals IQSTAT3-IQSTAT0. Bits 6-0 carry the external addresses in all expanded modes. In emulation or special test mode with internal visibility enabled the address is multiplexed with the alternate functions NOACC and IQSTAT on the respective pins. In single-chip modes the port pins can be used as general-purpose I/O. If the data direction bits of the associated I/O pins are set to logic level “1”, a read returns the value of the port register, otherwise the buffered pin input state is read.

22.3.2.16 Port K Data Direction Register (DDRK)

	7	6	5	4	3	2	1	0
R W	DDRK7	DDRK6	DDRK5	DDRK4	DDRK3	DDRK2	DDRK1	DDRK0
Reset	0	0	0	0	0	0	0	0

Figure 22-18. Port K Data Direction Register (DDRK)

Read: Anytime. In emulation modes, read operations will return the data from the external bus, in all other modes the data are read from this register.

Write: Anytime. In emulation modes, write operations will also be directed to the external bus.

This register controls the data direction for port K. When Port K is operating as a general purpose I/O port, DDRK determines whether each pin is an input or output. A logic level “1” causes the associated port pin to be an output and a logic level “0” causes the associated pin to be a high-impedance input.

Table 22-20. DDRK Field Descriptions

Field	Description
7–0 DDRK[7:0]	**Data Direction Port K** 0 Associated pin is configured as input. 1 Associated pin is configured as output. **Note:** Due to internal synchronization circuits, it can take up to 2 bus clock cycles until the correct value is read on PORTK after changing the DDRK register.

22.3.2.17 Port T Data Register (PTT)

	7	6	5	4	3	2	1	0
R W	PTT7	PTT6	PTT5	PTT4	PTT3	PTT2	PTT1	PTT0
ECT	IOC7	IOC6	IOC5	IOC4	IOC3	IOC2	IOC1	IOC0
Reset	0	0	0	0	0	0	0	0

Figure 22-19. Port T Data Register (PTT)

Read: Anytime.

Write: Anytime.

Table 22-21. PTT Field Descriptions

Field	Description
7–0 PTT[7:0]	**Port T** — Port T bits 7–0 are associated with ECT channels IOC7–IOC0 (*refer to ECT section*). When not used with the ECT, these pins can be used as general purpose I/O. If the data direction bits of the associated I/O pins are set to logic level “1”, a read returns the value of the port register, otherwise the buffered pin input state is read.

22.3.2.18 Port T Input Register (PTIT)

	7	6	5	4	3	2	1	0
R	PTIT7	PTIT6	PTIT5	PTIT4	PTIT3	PTIT2	PTIT1	PTIT0
W								
Reset[1]	—	—	—	—	—	—	—	—

= Unimplemented or Reserved

Figure 22-20. Port T Input Register (PTIT)

[1] These registers are reset to zero. Two bus clock cycles after reset release the register values are updated with the associated pin values.

Read: Anytime.

Write: Never, writes to this register have no effect.

Table 22-22. PTIT Field Descriptions

Field	Description
7–0 PTIT[7:0]	**Port T Input** — This register always reads back the buffered state of the associated pins. This can also be used to detect overload or short circuit conditions on output pins.

22.3.2.19 Port T Data Direction Register (DDRT)

	7	6	5	4	3	2	1	0
R W	DDRT7	DDRT6	DDRT5	DDRT4	DDRT3	DDRT2	DDRT1	DDRT0
Reset	0	0	0	0	0	0	0	0

Figure 22-21. Port T Data Direction Register (DDRT)

Read: Anytime.

Write: Anytime.

This register configures each port T pin as either input or output.

The ECT forces the I/O state to be an output for each timer port associated with an enabled output compare. In this case the data direction bits will not change.

The DDRT bits revert to controlling the I/O direction of a pin when the associated timer output compare is disabled.

The timer input capture always monitors the state of the pin.

Table 22-23. DDRT Field Descriptions

Field	Description
7–0 DDRT[7:0]	**Data Direction Port T** 0 Associated pin is configured as input. 1 Associated pin is configured as output. **Note:** Due to internal synchronization circuits, it can take up to 2 bus clock cycles until the correct value is read on PTT or PTIT registers, when changing the DDRT register.

22.3.2.20 Port T Reduced Drive Register (RDRT)

	7	6	5	4	3	2	1	0
R W	RDRT7	RDRT6	RDRT5	RDRT4	RDRT3	RDRT2	RDRT1	RDRT0
Reset	0	0	0	0	0	0	0	0

Figure 22-22. Port T Reduced Drive Register (RDRT)

Read: Anytime.

Write: Anytime.

This register configures the drive strength of each port T output pin as either full or reduced. If the port is used as input this bit is ignored.

Table 22-24. RDRT Field Descriptions

Field	Description
7–0 RDRT[7:0]	**Reduced Drive Port T** 0 Full drive strength at output. 1 Associated pin drives at about 1/6 of the full drive strength.

22.3.2.21 Port T Pull Device Enable Register (PERT)

	7	6	5	4	3	2	1	0
R W	PERT7	PERT6	PERT5	PERT4	PERT3	PERT2	PERT1	PERT0
Reset	0	0	0	0	0	0	0	0

Figure 22-23. Port T Pull Device Enable Register (PERT)

Read: Anytime.

Write: Anytime.

This register configures whether a pull-up or a pull-down device is activated, if the port is used as input. This bit has no effect if the port is used as output. Out of reset no pull device is enabled.

Table 22-25. PERT Field Descriptions

Field	Description
7–0 PERT[7:0]	**Pull Device Enable Port T** 0 Pull-up or pull-down device is disabled. 1 Either a pull-up or pull-down device is enabled.

22.3.2.22 Port T Polarity Select Register (PPST)

	7	6	5	4	3	2	1	0
R W	PPST7	PPST6	PPST5	PPST4	PPST3	PPST2	PPST1	PPST0
Reset	0	0	0	0	0	0	0	0

Figure 22-24. Port T Polarity Select Register (PPST)

Read: Anytime.

Write: Anytime.

This register selects whether a pull-down or a pull-up device is connected to the pin.

Table 22-26. PPST Field Descriptions

Field	Description
7–0 PPST[7:0]	**Pull Select Port T** 0 A pull-up device is connected to the associated port T pin, if enabled by the associated bit in register PERT and if the port is used as input. 1 A pull-down device is connected to the associated port T pin, if enabled by the associated bit in register PERT and if the port is used as input.

22.3.2.23 Port S Data Register (PTS)

	7	6	5	4	3	2	1	0
R W	PTS7	PTS6	PTS5	PTS4	PTS3	PTS2	PTS1	PTS0
SCI/SPI	$\overline{SS0}$	SCK0	MOSI0	MISO0	TXD1	RXD1	TXD0	RXD0
Reset	0	0	0	0	0	0	0	0

Figure 22-25. Port S Data Register (PTS)

Read: Anytime.

Write: Anytime.

Port S pins 7–4 are associated with the SPI0. The SPI0 pin configuration is determined by several status bits in the SPI0 module. *Refer to SPI section for details.* When not used with the SPI0, these pins can be used as general purpose I/O.

Port S bits 3–0 are associated with the SCI1 and SCI0. The SCI ports associated with transmit pins 3 and 1 are configured as outputs if the transmitter is enabled. The SCI ports associated with receive pins 2 and 0 are configured as inputs if the receiver is enabled. *Refer to SCI section for details.* When not used with the SCI, these pins can be used as general purpose I/O.

If the data direction bits of the associated I/O pins are set to logic level “1”, a read returns the value of the port register, otherwise the buffered pin input state is read.

22.3.2.24 Port S Input Register (PTIS)

	7	6	5	4	3	2	1	0
R	PTIS7	PTIS6	PTIS5	PTIS4	PTIS3	PTIS2	PTIS1	PTIS0
W								
Reset[1]	—	—	—	—	—	—	—	—

= Unimplemented or Reserved

Figure 22-26. Port S Input Register (PTIS)

[1] These registers are reset to zero. Two bus clock cycles after reset release the register values are updated with the associated pin values.

Read: Anytime.

Write: Never, writes to this register have no effect.

This register always reads back the buffered state of the associated pins. This also can be used to detect overload or short circuit conditions on output pins.

22.3.2.25 Port S Data Direction Register (DDRS)

	7	6	5	4	3	2	1	0
R W	DDRS7	DDRS6	DDRS5	DDRS4	DDRS3	DDRS2	DDRS1	DDRS0
Reset	0	0	0	0	0	0	0	0

Figure 22-27. Port S Data Direction Register (DDRS)

Read: Anytime.

Write: Anytime.

This register configures each port S pin as either input or output.

If SPI0 is enabled, the SPI0 determines the pin direction. *Refer to SPI section for details*.

If the associated SCI transmit or receive channel is enabled this register has no effect on the pins. The pin is forced to be an output if a SCI transmit channel is enabled, it is forced to be an input if the SCI receive channel is enabled.

The DDRS bits revert to controlling the I/O direction of a pin when the associated channel is disabled.

Table 22-27. DDRS Field Descriptions

Field	Description
7–0 DDRS[7:0]	**Data Direction Port S** 0 Associated pin is configured as input. 1 Associated pin is configured as output. **Note:** Due to internal synchronization circuits, it can take up to 2 bus clock cycles until the correct value is read on PTS or PTIS registers, when changing the DDRS register.

22.3.2.26 Port S Reduced Drive Register (RDRS)

	7	6	5	4	3	2	1	0
R W	RDRS7	RDRS6	RDRS5	RDRS4	RDRS3	RDRS2	RDRS1	RDRS0
Reset	0	0	0	0	0	0	0	0

Figure 22-28. Port S Reduced Drive Register (RDRS)

Read: Anytime.

Write: Anytime.

This register configures the drive strength of each port S output pin as either full or reduced. If the port is used as input this bit is ignored.

Table 22-28. RDRS Field Descriptions

Field	Description
7–0 RDRS[7:0]	**Reduced Drive Port S** 0 Full drive strength at output. 1 Associated pin drives at about 1/6 of the full drive strength.

22.3.2.27 Port S Pull Device Enable Register (PERS)

	7	6	5	4	3	2	1	0
R W	PERS7	PERS6	PERS5	PERS4	PERS3	PERS2	PERS1	PERS0
Reset	1	1	1	1	1	1	1	1

Figure 22-29. Port S Pull Device Enable Register (PERS)

Read: Anytime.

Write: Anytime.

This register configures whether a pull-up or a pull-down device is activated, if the port is used as input or as output in wired-OR (open drain) mode. This bit has no effect if the port is used as push-pull output. Out of reset a pull-up device is enabled.

Table 22-29. PERS Field Descriptions

Field	Description
7–0 PERS[7:0]	**Pull Device Enable Port S** 0 Pull-up or pull-down device is disabled. 1 Either a pull-up or pull-down device is enabled.

22.3.2.28 Port S Polarity Select Register (PPSS)

	7	6	5	4	3	2	1	0
R/W	PPSS7	PPSS6	PPSS5	PPSS4	PPSS3	PPSS2	PPSS1	PPSS0
Reset	0	0	0	0	0	0	0	0

Figure 22-30. Port S Polarity Select Register (PPSS)

Read: Anytime.

Write: Anytime.

This register selects whether a pull-down or a pull-up device is connected to the pin.

Table 22-30. PPSS Field Descriptions

Field	Description
7–0 PPSS[7:0]	**Pull Select Port S** 0 A pull-up device is connected to the associated port S pin, if enabled by the associated bit in register PERS and if the port is used as input or as wired-OR output. 1 A pull-down device is connected to the associated port S pin, if enabled by the associated bit in register PERS and if the port is used as input.

22.3.2.29 Port S Wired-OR Mode Register (WOMS)

	7	6	5	4	3	2	1	0
R/W	WOMS7	WOMS6	WOMS5	WOMS4	WOMS3	WOMS2	WOMS1	WOMS0
Reset	0	0	0	0	0	0	0	0

Figure 22-31. Port S Wired-OR Mode Register (WOMS)

Read: Anytime.

Write: Anytime.

This register configures the output pins as wired-OR. If enabled the output is driven active low only (open-drain). A logic level of “1” is not driven. It applies also to the SPI and SCI outputs and allows a multipoint connection of several serial modules. These bits have no influence on pins used as inputs.

Table 22-31. WOMS Field Descriptions

Field	Description
7–0 WOMS[7:0]	**Wired-OR Mode Port S** 0 Output buffers operate as push-pull outputs. 1 Output buffers operate as open-drain outputs.

22.3.2.30 Port M Data Register (PTM)

	7	6	5	4	3	2	1	0
R W	PTM7	PTM6	PTM5	PTM4	PTM3	PTM2	PTM1	PTM0
CAN	TXCAN3	RXCAN3	TXCAN2	RXCAN2	TXCAN1	RXCAN1	TXCAN0	RXCAN0
Routed CAN0			TXCAN0	RXCAN0	TXCAN0	RXCAN0		
Routed CAN4	TXCAN4	RXCAN4	TXCAN4	RXCAN4				
Routed SPIO			SCK0	MOSI0	$\overline{SS0}$	MISO0		
Reset	0	0	0	0	0	0	0	0

Figure 22-32. Port M Data Register (PTM)

Read: Anytime.

Write: Anytime.

Port M pins 75–0 are associated with the CAN0, CAN1, CAN2, CAN3, SCI3, as well as the routed CAN0, CAN4, and SPI0 modules. When not used with any of the peripherals, these pins can be used as general purpose I/O.

If the data direction bits of the associated I/O pins are set to logic level “1”, a read returns the value of the port register, otherwise the buffered pin input state is read.

Table 22-32. PTM Field Descriptions

Field	Description
7–6 PTM[7:6]	The CAN3 function (TXCAN3 and RXCAN3) takes precedence over the CAN4, SCI3 and the general purpose I/O function if the CAN3 module is enabled. *Refer to MSCAN section for details.* The CAN4 function (TXCAN4 and RXCAN4) takes precedence over the SCI3 and the general purpose I/O function if the CAN4 module is enabled. *Refer to MSCAN section for details.* The SCI3 function (TXD3 and RXD3) takes precedence over the general purpose I/O function if the SCI3 module is enabled. *Refer to SCI section for details.*
5–4 PTM[5:4]	The CAN2 function (TXCAN2 and RXCAN2) takes precedence over the routed CAN0, routed CAN4, the routed SPI0 and the general purpose I/O function if the CAN2 module is enabled{pim_9xd_prio.m}. The routed CAN0 function (TXCAN0 and RXCAN0) takes precedence over the routed CAN4, the routed SPI0 and the general purpose I/O function if the routed CAN0 module is enabled. The routed CAN4 function (TXCAN4 and RXCAN4) takes precedence over the routed SPI0 and general purpose I/O function if the routed CAN4 module is enabled. *Refer to MSCAN section for details.* The routed SPI0 function (SCK0 and MOSI0) takes precedence of the general purpose I/O function if the routed SPI0 is enabled. *Refer to SPI section for details.*

Table 22-32. PTM Field Descriptions (continued)

Field	Description
3–2 PTM[3:2]	The CAN1 function (TXCAN1 and RXCAN1) takes precedence over the routed CAN0, the routed SPI0 and the general purpose I/O function if the CAN1 module is enabled. The routed CAN0 function (TXCAN0 and RXCAN0) takes precedence over the routed SPI0 and the general purpose I/O function if the routed CAN0 module is enabled. *Refer to MSCAN section for details.* The routed SPI0 function ($\overline{SS0}$ and MISO0) takes precedence of the general purpose I/O function if the routed SPI0 is enabled and not in bidirectional mode. *Refer to SPI section for details.*
1–0 PTM[1:0]	The CAN0 function (TXCAN0 and RXCAN0) takes precedence over the general purpose I/O function if the CAN0 module is enabled. *Refer to MSCAN section for details.*

22.3.2.31 Port M Input Register (PTIM)

	7	6	5	4	3	2	1	0
R	PTIM7	PTIM6	PTIM5	PTIM4	PTIM3	PTIM2	PTIM1	PTIM0
W								
Reset[1]	—	—	—	—	—	—	—	—

= Unimplemented or Reserved

Figure 22-33. Port M Input Register (PTIM)

[1] These registers are reset to zero. Two bus clock cycles after reset release the register values are updated with the associated pin values.

Read: Anytime.

Write: Never, writes to this register have no effect.

This register always reads back the buffered state of the associated pins. This can also be used to detect overload or short circuit conditions on output pins.

22.3.2.32 Port M Data Direction Register (DDRM)

	7	6	5	4	3	2	1	0
R W	DDRM7	DDRM6	DDRM5	DDRM4	DDRM3	DDRM2	DDRM1	DDRM0
Reset	0	0	0	0	0	0	0	0

Figure 22-34. Port M Data Direction Register (DDRM)

Read: Anytime.

Write: Anytime.

This register configures each port M pin as either input or output.

The CAN/SCI3 forces the I/O state to be an output for each port line associated with an enabled output (TXCAN[3:0], TXD3). TheyAlso forces the I/O state to be an input for each port line associated with an enabled input (RXCAN[3:0], RXD3). In those cases the data direction bits will not change.

The DDRM bits revert to controlling the I/O direction of a pin when the associated peripheral module is disabled.

Table 22-33. DDRM Field Descriptions

Field	Description
7–0 DDRM[7:0]	**Data Direction Port M** 0 Associated pin is configured as input. 1 Associated pin is configured as output. **Note:** Due to internal synchronization circuits, it can take up to 2 bus clock cycles until the correct value is read on PTM or PTIM registers, when changing the DDRM register.

22.3.2.33 Port M Reduced Drive Register (RDRM)

	7	6	5	4	3	2	1	0
R W	RDRM7	RDRM6	RDRM5	RDRM4	RDRM3	RDRM2	RDRM1	RDRM0
Reset	0	0	0	0	0	0	0	0

Figure 22-35. Port M Reduced Drive Register (RDRM)

Read: Anytime.

Write: Anytime.

This register configures the drive strength of each Port M output pin as either full or reduced. If the port is used as input this bit is ignored.

Table 22-34. RDRM Field Descriptions

Field	Description
7–0 RDRM[7:0]	**Reduced Drive Port M** 0 Full drive strength at output. 1 Associated pin drives at about 1/6 of the full drive strength.

22.3.2.34 Port M Pull Device Enable Register (PERM)

	7	6	5	4	3	2	1	0
R W	PERM7	PERM6	PERM5	PERM4	PERM3	PERM2	PERM1	PERM0
Reset	0	0	0	0	0	0	0	0

Figure 22-36. Port M Pull Device Enable Register (PERM)

Read: Anytime.

Write: Anytime.

This register configures whether a pull-up or a pull-down device is activated, if the port is used as input or wired-OR output. This bit has no effect if the port is used as push-pull output. Out of reset no pull device is enabled.

Table 22-35. PERM Field Descriptions

Field	Description
7–0 PERM[7:0]	**Pull Device Enable Port M** 0 Pull-up or pull-down device is disabled. 1 Either a pull-up or pull-down device is enabled.

22.3.2.35 Port M Polarity Select Register (PPSM)

	7	6	5	4	3	2	1	0
R/W	PPSM7	PPSM6	PPSM5	PPSM4	PPSM3	PPSM2	PPSM1	PPSM0
Reset	0	0	0	0	0	0	0	0

Figure 22-37. Port M Polarity Select Register (PPSM)

Read: Anytime.

Write: Anytime.

This register selects whether a pull-down or a pull-up device is connected to the pin. If CAN is active a pull-up device can be activated on the RXCAN[3:0] inputs, but not a pull-down.

Table 22-36. PPSM Field Descriptions

Field	Description
7–0 PPSM[7:0]	**Pull Select Port M** 0 A pull-up device is connected to the associated port M pin, if enabled by the associated bit in register PERM and if the port is used as general purpose or RXCAN input. 1 A pull-down device is connected to the associated port M pin, if enabled by the associated bit in register PERM and if the port is used as a general purpose but not as RXCAN.

22.3.2.36 Port M Wired-OR Mode Register (WOMM)

	7	6	5	4	3	2	1	0
R/W	WOMM7	WOMM6	WOMM5	WOMM4	WOMM3	WOMM2	WOMM1	WOMM0
Reset	0	0	0	0	0	0	0	0

Figure 22-38. Port M Wired-OR Mode Register (WOMM)

Read: Anytime.

Write: Anytime.

This register configures the output pins as wired-OR. If enabled the output is driven active low only (open-drain). A logic level of “1” is not driven. It applies also to the CAN outputs and allows a multipoint connection of several serial modules. This bit has no influence on pins used as inputs.

Table 22-37. WOMM Field Descriptions

Field	Description
7–0 WOMM[7:0]	**Wired-OR Mode Port M** 0 Output buffers operate as push-pull outputs. 1 Output buffers operate as open-drain outputs.

22.3.2.37 Module Routing Register (MODRR)

	7	6	5	4	3	2	1	0
R	0	MODRR6	MODRR5	MODRR4	MODRR3	MODRR2	MODRR1	MODRR0
W								
Reset	0	0	0	0	0	0	0	0

= Unimplemented or Reserved

Figure 22-39. Module Routing Register (MODRR)

Read: Anytime.

Write: Anytime.

This register configures the re-routing of CAN0, CAN4, SPI0, SPI1, and SPI2 on alternative ports.

Table 22-38. Module Routing Summary

Module	MODRR							Related Pins			
	6	5	4	3	2	1	0	RXCAN		TXCAN	
CAN0	x	x	x	x	x	0	0	PM0		PM1	
	x	x	x	x	x	0	1	PM2		PM3	
	x	x	x	x	x	1	0	PM4		PM5	
	x	x	x	x	x	1	1	PJ6		PJ7	
CAN4	x	x	x	0	0	x	x	PJ6		PJ7	
	x	x	x	0	1	x	x	PM4		PM5	
	x	x	x	1	0	x	x	PM6		PM7	
	x	x	x	1	1	x	x	Reserved			
								MISO	MOSI	SCK	$\overline{SS}$
SPI0	x	x	0	x	x	x	x	PS4	PS5	PS6	PS7
	x	x	1	x	x	x	x	PM2	PM4	PM5	PM3
SPI1	x	0	x	x	x	x	x	PP0	PP1	PP2	PP3
	x	1	x	x	x	x	x	PH0	PH1	PH2	PH3
SPI2	0	x	x	x	x	x	x	PP4	PP5	PP7	PP6
	1	x	x	x	x	x	x	PH4	PH5	PH6	PH7

22.3.2.38 Port P Data Register (PTP)

	7	6	5	4	3	2	1	0
R W	PTP7	PTP6	PTP5	PTP4	PTP3	PTP2	PTP1	PTP0
PWM	PWM7	PWM6	PWM5	PWM4	PWM3	PWM2	PWM1	PWM0
SPI	SCK2	$\overline{SS2}$	MOSI2	MISO2	$\overline{SS1}$	SCK1	MOSI1	MISO1
Reset	0	0	0	0	0	0	0	0

Figure 22-40. Port P Data Register (PTP)

Read: Anytime.

Write: Anytime.

Port P pins 7, and 5–0 are associated with the PWM as well as the SPI1 and SPI2 modules. These pins can be used as general purpose I/O when not used with any of the peripherals.

If the data direction bits of the associated I/O pins are set to logic level “1”, a read returns the value of the port register, otherwise the buffered pin input state is read.

The PWM function takes precedence over the general purpose I/O and the SPI2 or SPI1 function if the associated PWM channel is enabled. While channels 6 and 5-0 are output only if the respective channel is enabled, channel 7 can be PWM output or input if the shutdown feature is enabled. *Refer to PWM section for details.*

The SPI2 function takes precedence over the general purpose I/O function if enabled. *Refer to SPI section for details.*

The SPI1 function takes precedence over the general purpose I/O function if enabled. *Refer to SPI section for details.*

22.3.2.39 Port P Input Register (PTIP)

	7	6	5	4	3	2	1	0
R	PTIP7	PTIP6	PTIP5	PTIP4	PTIP3	PTIP2	PTIP1	PTIP0
W								
Reset[1]	—	—	—	—	—	—	—	—

= Unimplemented or Reserved

Figure 22-41. Port P Input Register (PTIP)

[1] These registers are reset to zero. Two bus clock cycles after reset release the register values are updated with the associated pin values.

Read: Anytime.

Write: Never, writes to this register have no effect.

This register always reads back the buffered state of the associated pins. This can also be used to detect overload or short circuit conditions on output pins.

22.3.2.40 Port P Data Direction Register (DDRP)

	7	6	5	4	3	2	1	0
R W	DDRP7	DDRP6	DDRP5	DDRP4	DDRP3	DDRP2	DDRP1	DDRP0
Reset	0	0	0	0	0	0	0	0

Figure 22-42. Port P Data Direction Register (DDRP)

Read: Anytime.

Write: Anytime.

This register configures each port P pin as either input or output.

If the associated PWM channel or SPI module is enabled this register has no effect on the pins.

The PWM forces the I/O state to be an output for each port line associated with an enabled PWM7–0 channel. Channel 7 can force the pin to input if the shutdown feature is enabled. *Refer to PWM section for details.*

If a SPI module is enabled, the SPI determines the pin direction. *Refer to SPI section for details.*

The DDRP bits revert to controlling the I/O direction of a pin when the associated peripherals are disabled.

Table 22-39. DDRP Field Descriptions

Field	Description
7–0 DDRP[7:0]	**Data Direction Port P** 0 Associated pin is configured as input. 1 Associated pin is configured as output. **Note:** Due to internal synchronization circuits, it can take up to 2 bus clock cycles until the correct value is read on PTP or PTIP registers, when changing the DDRP register.

22.3.2.41 Port P Reduced Drive Register (RDRP)

	7	6	5	4	3	2	1	0
R W	RDRP7	RDRP6	RDRP5	RDRP4	RDRP3	RDRP2	RDRP1	RDRP0
Reset	0	0	0	0	0	0	0	0

Figure 22-43. Port P Reduced Drive Register (RDRP)

Read: Anytime.

Write: Anytime.

This register configures the drive strength of each port P output pin as either full or reduced. If the port is used as input this bit is ignored.

Table 22-40. RDRP Field Descriptions

Field	Description
7–0 RDRP[7:0]	**Reduced Drive Port P** 0 Full drive strength at output. 1 Associated pin drives at about 1/6 of the full drive strength.

22.3.2.42 Port P Pull Device Enable Register (PERP)

	7	6	5	4	3	2	1	0
R W	PERP7	PERP6	PERP5	PERP4	PERP3	PERP2	PERP1	PERP0
Reset	0	0	0	0	0	0	0	0

Figure 22-44. Port P Pull Device Enable Register (PERP)

Read: Anytime.

Write: Anytime.

This register configures whether a pull-up or a pull-down device is activated, if the port is used as input. This bit has no effect if the port is used as output. Out of reset no pull device is enabled.

Table 22-41. PERP Field Descriptions

Field	Description
7–0 PERP[7:0]	**Pull Device Enable Port P** 0 Pull-up or pull-down device is disabled. 1 Either a pull-up or pull-down device is enabled.

22.3.2.43 Port P Polarity Select Register (PPSP)

	7	6	5	4	3	2	1	0
R W	PPSP7	PPSP6	PPSP5	PPSP4	PPSP3	PPSP2	PPSP1	PPSP0
Reset	0	0	0	0	0	0	0	0

Figure 22-45. Port P Polarity Select Register (PPSP)

Read: Anytime.

Write: Anytime.

This register serves a dual purpose by selecting the polarity of the active interrupt edge as well as selecting a pull-up or pull-down device if enabled.

Table 22-42. PPSP Field Descriptions

Field	Description
7–0 PPSP[7:0]	**Polarity Select Port P** 0 Falling edge on the associated port P pin sets the associated flag bit in the PIFP register.A pull-up device is connected to the associated port P pin, if enabled by the associated bit in register PERP and if the port is used as input. 1 Rising edge on the associated port P pin sets the associated flag bit in the PIFP register.A pull-down device is connected to the associated port P pin, if enabled by the associated bit in register PERP and if the port is used as input.

22.3.2.44 Port P Interrupt Enable Register (PIEP)

	7	6	5	4	3	2	1	0
R W	PIEP7	PIEP6	PIEP5	PIEP4	PIEP3	PIEP2	PIEP1	PIEP0
Reset	0	0	0	0	0	0	0	0

Figure 22-46. Port P Interrupt Enable Register (PIEP)

Read: Anytime.

Write: Anytime.

This register disables or enables on a per-pin basis the edge sensitive external interrupt associated with Port P.

Table 22-43. PIEP Field Descriptions

Field	Description
7–0 PIEP[7:0]	**Interrupt Enable Port P** 0 Interrupt is disabled (interrupt flag masked). 1 Interrupt is enabled.

22.3.2.45 Port P Interrupt Flag Register (PIFP)

	7	6	5	4	3	2	1	0
R W	PIFP7	PIFP6	PIFP5	PIFP4	PIFP3	PIFP2	PIFP1	PIFP0
Reset	0	0	0	0	0	0	0	0

Figure 22-47. Port P Interrupt Flag Register (PIFP)

Read: Anytime.

Write: Anytime.

Each flag is set by an active edge on the associated input pin. This could be a rising or a falling edge based on the state of the PPSP register. To clear this flag, write logic level “1” to the corresponding bit in the PIFP register. Writing a “0” has no effect.

Table 22-44. PIFP Field Descriptions

Field	Description
7–0 PIFP[7:0]	**Interrupt Flags Port P** 0 No active edge pending. Writing a “0” has no effect. 1 Active edge on the associated bit has occurred (an interrupt will occur if the associated enable bit is set). Writing a logic level “1” clears the associated flag.

22.3.2.46 Port H Data Register (PTH)

	7	6	5	4	3	2	1	0
R W	PTH7	PTH6	PTH5	PTH4	PTH3	PTH2	PTH1	PTH0
Routed SPI	$\overline{SS2}$	SCK2	MOSI2	MISO2	$\overline{SS1}$	SCK1	MOSI1	MISO1
Reset	0	0	0	0	0	0	0	0

Figure 22-48. Port H Data Register (PTH)

Read: Anytime.

Write: Anytime.

Port H pins 7–0 are associated with the SCI4 and SCI5 as well as the routed SPI1 and SPI2 modules.

These pins can be used as general purpose I/O when not used with any of the peripherals.

If the data direction bits of the associated I/O pins are set to logic level “1”, a read returns the value of the port register, otherwise the buffered pin input state is read.

The routed SPI2 function takes precedence over the SCI4 and SCI5 and the general purpose I/O function if the routed SPI2 module is enabled. *Refer to SPI section for details.*

The routed SPI1 function takes precedence over the general purpose I/O function if the routed SPI1 is enabled. *Refer to SPI section for details.*

The SCI4 and SCI5 function takes precedence over the general purpose I/O function if the SCI4 or SCI5 is enabled. *Refer to SCI section for details.*

22.3.2.47 Port H Input Register (PTIH)

	7	6	5	4	3	2	1	0
R	PTIH7	PTIH6	PTIH5	PTIH4	PTIH3	PTIH2	PTIH1	PTIH0
W								
Reset[1]	—	—	—	—	—	—	—	—

= Unimplemented or Reserved

Figure 22-49. Port H Input Register (PTIH)

[1] These registers are reset to zero. Two bus clock cycles after reset release the register values are updated with the associated pin values.

Read: Anytime.

Write: Never, writes to this register have no effect.

This register always reads back the buffered state of the associated pins. This can also be used to detect overload or short circuit conditions on output pins.

22.3.2.48 Port H Data Direction Register (DDRH)

	7	6	5	4	3	2	1	0
R W	DDRH7	DDRH6	DDRH5	DDRH4	DDRH3	DDRH2	DDRH1	DDRH0
Reset	0	0	0	0	0	0	0	0

Figure 22-50. Port H Data Direction Register (DDRH)

Read: Anytime.

Write: Anytime.

This register configures each port H pin as either input or output.

If the associated SCI channel or routed SPI module is enabled this register has no effect on the pins.

The SCI forces the I/O state to be an output for each port line associated with an enabled output (TXD5, TXD4). It also forces the I/O state to be an input for each port line associated with an enabled input (RXD5, RXD4). In those cases the data direction bits will not change.

If a SPI module is enabled, the SPI determines the pin direction. *Refer to SPI section for details.*

The DDRH bits revert to controlling the I/O direction of a pin when the associated peripheral modules are disabled.

Table 22-45. DDRH Field Descriptions

Field	Description
7–0 DDRH[7:0]	**Data Direction Port H** 0 Associated pin is configured as input. 1 Associated pin is configured as output. **Note:** Due to internal synchronization circuits, it can take up to 2 bus clock cycles until the correct value is read on PTH or PTIH registers, when changing the DDRH register.

22.3.2.49 Port H Reduced Drive Register (RDRH)

	7	6	5	4	3	2	1	0
R W	RDRH7	RDRH6	RDRH5	RDRH4	RDRH3	RDRH2	RDRH1	RDRH0
Reset	0	0	0	0	0	0	0	0

Figure 22-51. Port H Reduced Drive Register (RDRH)

Read: Anytime.

Write: Anytime.

This register configures the drive strength of each Port H output pin as either full or reduced. If the port is used as input this bit is ignored.

Table 22-46. RDRH Field Descriptions

Field	Description
7–0 RDRH[7:0]	**Reduced Drive Port H** 0 Full drive strength at output. 1 Associated pin drives at about 1/6 of the full drive strength.

22.3.2.50 Port H Pull Device Enable Register (PERH)

	7	6	5	4	3	2	1	0
R W	PERH7	PERH6	PERH5	PERH4	PERH3	PERH2	PERH1	PERH0
Reset	0	0	0	0	0	0	0	0

Figure 22-52. Port H Pull Device Enable Register (PERH)

Read: Anytime.

Write: Anytime.

This register configures whether a pull-up or a pull-down device is activated, if the port is used as input. This bit has no effect if the port is used as output. Out of reset no pull device is enabled.

Table 22-47. PERH Field Descriptions

Field	Description
7–0 PERH[7:0]	**Pull Device Enable Port H** 0 Pull-up or pull-down device is disabled. 1 Either a pull-up or pull-down device is enabled.

22.3.2.51 Port H Polarity Select Register (PPSH)

	7	6	5	4	3	2	1	0
R W	PPSH7	PPSH6	PPSH5	PPSH4	PPSH3	PPSH2	PPSH1	PPSH0
Reset	0	0	0	0	0	0	0	0

Figure 22-53. Port H Polarity Select Register (PPSH)

Read: Anytime.

Write: Anytime.

This register serves a dual purpose by selecting the polarity of the active interrupt edge as well as selecting a pull-up or pull-down device if enabled.

Table 22-48. PPSH Field Descriptions

Field	Description
7–0 PPSH[7:0]	**Polarity Select Port H** 0 Falling edge on the associated port H pin sets the associated flag bit in the PIFH register. A pull-up device is connected to the associated port H pin, if enabled by the associated bit in register PERH and if the port is used as input. 1 Rising edge on the associated port H pin sets the associated flag bit in the PIFH register. A pull-down device is connected to the associated port H pin, if enabled by the associated bit in register PERH and if the port is used as input.

22.3.2.52 Port H Interrupt Enable Register (PIEH)

	7	6	5	4	3	2	1	0
R W	PIEH7	PIEH6	PIEH5	PIEH4	PIEH3	PIEH2	PIEH1	PIEH0
Reset	0	0	0	0	0	0	0	0

Figure 22-54. Port H Interrupt Enable Register (PIEH)

Read: Anytime.

Write: Anytime.

This register disables or enables on a per-pin basis the edge sensitive external interrupt associated with Port H.

Table 22-49. PIEH Field Descriptions

Field	Description
7–0 PIEH[7:0]	**Interrupt Enable Port H** 0 Interrupt is disabled (interrupt flag masked). 1 Interrupt is enabled.

22.3.2.53 Port H Interrupt Flag Register (PIFH)

	7	6	5	4	3	2	1	0
R W	PIFH7	PIFH6	PIFH5	PIFH4	PIFH3	PIFH2	PIFH1	PIFH0
Reset	0	0	0	0	0	0	0	0

Figure 22-55. Port H Interrupt Flag Register (PIFH)

Read: Anytime.

Write: Anytime.

Each flag is set by an active edge on the associated input pin. This could be a rising or a falling edge based on the state of the PPSH register. To clear this flag, write logic level “1” to the corresponding bit in the PIFH register. Writing a “0” has no effect.

Table 22-50. PIFH Field Descriptions

Field	Description
7–0 PIFH[7:0]	**Interrupt Flags Port H** 0 No active edge pending. Writing a “0” has no effect. 1 Active edge on the associated bit has occurred (an interrupt will occur if the associated enable bit is set). Writing a logic level “1” clears the associated flag.

22.3.2.54 Port J Data Register (PTJ)

	7	6	5	4	3	2	1	0
R	PTJ7	PTJ6	PTJ5	PTJ4	0	PTJ2	PTJ1	PTJ0
W								
CAN4/ SCI2	TXCAN4	RXCAN4					TXD2	RXD2
IICO	SCL0	SDA0						
IIC1			SCL1	SDA1				
Routed CAN0	TXCAN0	RXCAN0						
Alt. Function			$\overline{CS2}$	$\overline{CS0}$		$\overline{CS1}$		$\overline{CS3}$
Reset	0	0	0	0	0	0	0	0

= Unimplemented or Reserved

Figure 22-56. Port J Data Register (PTJ)

Read: Anytime.

Write: Anytime.

Port J pins 7–4 and 2–0 are associated with the CAN4, SCI2, IIC0 and IIC1, the routed CAN0 modules and chip select signals ($\overline{CS0}$, $\overline{CS1}$, $\overline{CS2}$, $\overline{CS3}$). These pins can be used as general purpose I/O when not used with any of the peripherals.

If the data direction bits of the associated I/O pins are set to logic level “1”, a read returns the value of the port register, otherwise the buffered pin input state is read.

Table 22-51. PTJ Field Descriptions

Field	Description
7–6 PJ[7:0]	The CAN4 function (TXCAN4 and RXCAN4) takes precedence over the IIC0, the routed CAN0 and the general purpose I/O function if the CAN4 module is enabled. The IIC0 function (SCL0 and SDA0) takes precedence over the routed CAN0 and the general purpose I/O function if the IIC0 is enabled. If the IIC0 module takes precedence the SDA0 and SCL0 outputs are configured as open drain outputs. *Refer to IIC section for details.* The routed CAN0 function (TXCAN0 and RXCAN0) takes precedence over the general purpose I/O function if the routed CAN0 module is enabled. *Refer to MSCAN section for details.*
5-4 PJ[5:4]	The IIC1 function (SCL1 and SDA1) takes precedence over the chip select ($\overline{CS0}$, $\overline{CS2}$) and general purpose I/O function if the IIC1 is enabled. The chip selects ($\overline{CS0}$, $\overline{CS2}$) take precedence over the general purpose I/O. If the IIC1 module takes precedence the SDA1 and SCL1 outputs are configured as open drain outputs. *Refer to IIC section for details.*
2 PJ2	The chip select function ($\overline{CS1}$) takes precedence over the general purpose I/O.

Table 22-51. PTJ Field Descriptions (continued)

Field	Description
1 PJ1	The SCI2 function takes precedence over the general purpose I/O function if the SCI2 module is enabled. *Refer to SCI section for details.*
0 PJ0	The SCI2 function takes precedence over the chip select ($\overline{CS3}$) and the general purpose I/O function if the SCI2 module is enabled. The chip select ($\overline{CS3}$) takes precedence over the general purpose I/O function. *Refer to SCI section for details.*

22.3.2.55 Port J Input Register (PTIJ)

	7	6	5	4	3	2	1	0
R	PTIJ7	PTIJ6	PTIJ5	PTIJ4	0	PTIJ2	PTIJ1	PTIJ0
W								
Reset[1]	0	0	0	0	0	0	0	0

= Unimplemented or Reserved

Figure 22-57. Port J Input Register (PTIJ)

[1] These registers are reset to zero. Two bus clock cycles after reset release the register values are updated with the associated pin values.

Read: Anytime.

Write: Never, writes to this register have no effect.

This register always reads back the buffered state of the associated pins. This can be used to detect overload or short circuit conditions on output pins.

22.3.2.56 Port J Data Direction Register (DDRJ)

	7	6	5	4	3	2	1	0
R	DDRJ7	DDRJ6	DDRJ5	DDRJ4	0	DDRJ2	DDRJ1	DDRJ0
W								
Reset	0	0	0	0	0	0	0	0

= Unimplemented or Reserved

Figure 22-58. Port J Data Direction Register (DDRJ)

Read: Anytime.

Write: Anytime.

This register configures each port J pin as either input or output.

The CAN forces the I/O state to be an output on PJ7 (TXCAN4) and an input on pin PJ6 (RXCAN4). The IIC takes control of the I/O if enabled. In these cases the data direction bits will not change.

The SCI2 forces the I/O state to be an output for each port line associated with an enabled output (TXD2). It also forces the I/O state to be an input for each port line associated with an enabled input (RXD2). In these cases the data direction bits will not change.

The DDRJ bits revert to controlling the I/O direction of a pin when the associated peripheral module is disabled.

Table 22-52. DDRJ Field Descriptions

Field	Description
7–0 DDRJ[7:4] DDRJ[2:0]	**Data Direction Port J** 0 Associated pin is configured as input. 1 Associated pin is configured as output. **Note:** Due to internal synchronization circuits, it can take up to 2 bus clock cycles until the correct value is read on PTJ or PTIJ registers, when changing the DDRJ register.

22.3.2.57 Port J Reduced Drive Register (RDRJ)

	7	6	5	4	3	2	1	0
R	RDRJ7	RDRJ6	RDRJ5	RDRJ4	0	RDRJ2	RDRJ1	RDRJ0
W								
Reset	0	0	0	0	0	0	0	0

= Unimplemented or Reserved

Figure 22-59. Port J Reduced Drive Register (RDRJ)

Read: Anytime.

Write: Anytime.

This register configures the drive strength of each port J output pin as either full or reduced. If the port is used as input this bit is ignored.

Table 22-53. RDRJ Field Descriptions

Field	Description
7–0 RDRJ[7:4] RDRJ[2:0]	**Reduced Drive Port J** 0 Full drive strength at output. 1 Associated pin drives at about 1/6 of the full drive strength.

22.3.2.58 Port J Pull Device Enable Register (PERJ)

	7	6	5	4	3	2	1	0
R	PERJ7	PERJ6	PERJ5	PERJ4	0	PERJ2	PERJ1	PERJ0
W								
Reset	1	1	1	1	0	1	1	1

= Unimplemented or Reserved

Figure 22-60. Port J Pull Device Enable Register (PERJ)

Read: Anytime.

Write: Anytime.

This register configures whether a pull-up or a pull-down device is activated, if the port is used as input or as wired-OR output. This bit has no effect if the port is used as push-pull output. Out of reset a pull-up device is enabled.

Table 22-54. PERJ Field Descriptions

Field	Description
7–0 PERJ[7:4] PERJ[2:0]	**Pull Device Enable Port J** 0 Pull-up or pull-down device is disabled. 1 Either a pull-up or pull-down device is enabled.

22.3.2.59 Port J Polarity Select Register (PPSJ)

	7	6	5	4	3	2	1	0
R W	PPSJ7	PPSJ6	PPSJ5	PPSJ4	0	PPSJ2	PPSJ1	PPSJ0
Reset	0	0	0	0	0	0	0	0

= Unimplemented or Reserved

Figure 22-61. Port J Polarity Select Register (PPSJ)

Read: Anytime.

Write: Anytime.

This register serves a dual purpose by selecting the polarity of the active interrupt edge as well as selecting a pull-up or pull-down device if enabled.

Table 22-55. PPSJ Field Descriptions

Field	Description
7–0 PPSJ[7:4] PPSJ[2:0]	**Polarity Select Port J** 0 Falling edge on the associated port J pin sets the associated flag bit in the PIFJ register. A pull-up device is connected to the associated port J pin, if enabled by the associated bit in register PERJ and if the port is used as general purpose input or as IIC port. 1 Rising edge on the associated port J pin sets the associated flag bit in the PIFJ register. A pull-down device is connected to the associated port J pin, if enabled by the associated bit in register PERJ and if the port is used as input.

22.3.2.60 Port J Interrupt Enable Register (PIEJ)

	7	6	5	4	3	2	1	0
R W	PIEJ7	PIEJ6	PIEJ5	PIEJ4	0	PIEJ2	PIEJ1	PIEJ0
Reset	0	0	0	0	0	0	0	0

= Unimplemented or Reserved

Figure 22-62. Port J Interrupt Enable Register (PIEJ)

This register disables or enables on a per-pin basis the edge sensitive external interrupt associated with Port J.

Table 22-56. PIEJ Field Descriptions

Field	Description
7–0 PIEJ[7:4] PIEJ[2:0]	**Interrupt Enable Port J** 0 Interrupt is disabled (interrupt flag masked). 1 Interrupt is enabled.

22.3.2.61 Port J Interrupt Flag Register (PIFJ)

	7	6	5	4	3	2	1	0
R	PIFJ7	PIFJ6	PIFJ5	PIFJ4	0	PIFJ2	PIFJ1	PIFJ0
W								
Reset	0	0	0	0	0	0	0	0

= Unimplemented or Reserved

Figure 22-63. Port J Interrupt Flag Register (PIFJ)

Read: Anytime.

Write: Anytime.

Each flag is set by an active edge on the associated input pin. This could be a rising or a falling edge based on the state of the PPSJ register. To clear this flag, write logic level “1” to the corresponding bit in the PIFJ register. Writing a “0” has no effect.

Table 22-57. PIEJ Field Descriptions

Field	Description
7–0 PIFJ[7:4] PIFJ[2:0]	**Interrupt Flags Port J** 0 No active edge pending. Writing a “0” has no effect. 1 Active edge on the associated bit has occurred (an interrupt will occur if the associated enable bit is set). Writing a logic level “1” clears the associated flag.

22.3.2.62 Port AD0 Data Register 1 (PT1AD0)

	7	6	5	4	3	2	1	0
R	PT1AD07	PT1AD06	PT1AD05	PT1AD04	PT1AD03	PT1AD02	PT1AD01	PT1AD00
W								
Reset	0	0	0	0	0	0	0	0

Figure 22-64. Port AD0 Data Register 1 (PT1AD0)

Read: Anytime.

Write: Anytime.

This register is associated with AD0 pins PAD[7:0]. These pins can also be used as general purpose I/O.

If the data direction bits of the associated I/O pins are set to 1, a read returns the value of the port register, otherwise the value at the pins is read.

22.3.2.63 Port AD0 Data Direction Register 1 (DDR1AD0)

	7	6	5	4	3	2	1	0
R W	DDR1AD07	DDR1AD06	DDR1AD05	DDR1AD04	DDR1AD03	DDR1AD02	DDR1AD01	DDR1AD00
Reset	0	0	0	0	0	0	0	0

Figure 22-65. Port AD0 Data Direction Register 1 (DDR1AD0)

Read: Anytime.

Write: Anytime.

This register configures pins PAD[07:00] as either input or output.

Table 22-58. DDR1AD0 Field Descriptions

Field	Description
7–0 DDR1AD0[7:0]	**Data Direction Port AD0 Register 1** 0 Associated pin is configured as input. 1 Associated pin is configured as output. **Note:** Due to internal synchronization circuits, it can take up to 2 bus clock cycles until the correct value is read on PTAD01 register, when changing the DDR1AD0 register. **Note:** To use the digital input function on port AD0 the ATD0 digital input enable register (ATD0DIEN) has to be set to logic level “1”.

22.3.2.64 Port AD0 Reduced Drive Register 1 (RDR1AD0)

	7	6	5	4	3	2	1	0
R/W	RDR1AD07	RDR1AD06	RDR1AD05	RDR1AD04	RDR1AD03	RDR1AD02	RDR1AD01	RDR1AD00
Reset	0	0	0	0	0	0	0	0

Figure 22-66. Port AD0 Reduced Drive Register 1 (RDR1AD0)

Read: Anytime.

Write: Anytime.

This register configures the drive strength of each output pin PAD[07:00] as either full or reduced. If the port is used as input this bit is ignored.

Table 22-59. RDR1AD0 Field Descriptions

Field	Description
7–0 RDR1AD0[7:0]	**Reduced Drive Port AD0 Register 1** 0 Full drive strength at output. 1 Associated pin drives at about 1/6 of the full drive strength.

22.3.2.65 Port AD0 Pull Up Enable Register 1 (PER1AD0)

	7	6	5	4	3	2	1	0
R/W	PER1AD07	PER1AD06	PER1AD05	PER1AD04	PER1AD03	PER1AD02	PER1AD01	PER1AD00
Reset	0	0	0	0	0	0	0	0

Figure 22-67. Port AD0 Pull Up Enable Register 1 (PER1AD0)

Read: Anytime.

Write: Anytime.

This register activates a pull-up device on the respective pin PAD[07:00] if the port is used as input. This bit has no effect if the port is used as output. Out of reset no pull device is enabled.

Table 22-60. PER1AD0 Field Descriptions

Field	Description
7–0 PER1AD0[7:0]	**Pull Device Enable Port AD0 Register 1** 0 Pull-up device is disabled. 1 Pull-up device is enabled.

22.3.2.66 Port AD1 Data Register 0 (PT0AD1)

	7	6	5	4	3	2	1	0
R W	PT0AD123	PT0AD122	PT0AD121	PT0AD120	PT0AD119	PT0AD118	PT0AD117	PT0AD116
Reset	0	0	0	0	0	0	0	0

Figure 22-68. Port AD1 Data Register 0 (PT0AD1)

Read: Anytime.

Write: Anytime.

This register is associated with AD1 pins PAD[23:16]. These pins can also be used as general purpose I/O.

If the data direction bits of the associated I/O pins are set to 1, a read returns the value of the port register, otherwise the value at the pins is read.

22.3.2.67 Port AD1 Data Register 1 (PT1AD1)

	7	6	5	4	3	2	1	0
R W	PT1AD115	PT1AD114	PT1AD113	PT1AD112	PT1AD111	PT1AD110	PT1AD19	PT1AD18
Reset	0	0	0	0	0	0	0	0

Figure 22-69. Port AD1 Data Register 1 (PT1AD1)

Read: Anytime.

Write: Anytime.

This register is associated with AD1 pins PAD[15:08]. These pins can also be used as general purpose I/O.

If the data direction bits of the associated I/O pins are set to 1, a read returns the value of the port register, otherwise the value at the pins is read.

22.3.2.68 Port AD1 Data Direction Register 0 (DDR0AD1)

	7	6	5	4	3	2	1	0
R W	DDR0AD123	DDR0AD122	DDR0AD121	DDR0AD120	DDR0AD119	DDR0AD118	DDR0AD117	DDR0AD116
Reset	0	0	0	0	0	0	0	0

Figure 22-70. Port AD1 Data Direction Register 0 (DDR0AD1)

Read: Anytime.

Write: Anytime.

This register configures pin PAD[23:16] as either input or output.

Table 22-61. DDR0AD1 Field Descriptions

Field	Description
7–0 DDR0AD1[23:16]	**Data Direction Port AD1 Register 0** 0 Associated pin is configured as input. 1 Associated pin is configured as output. **Note:** Due to internal synchronization circuits, it can take up to 2 bus clock cycles until the correct value is read on PTAD10 register, when changing the DDR0AD1 register. **Note:** To use the digital input function on Port AD1 the ATD1 digital input enable register (ATD1DIEN0) has to be set to logic level “1”.

22.3.2.69 Port AD1 Data Direction Register 1 (DDR1AD1)

	7	6	5	4	3	2	1	0
R W	DDR1AD115	DDR1AD114	DDR1AD113	DDR1AD112	DDR1AD111	DDR1AD110	DDR1AD19	DDR1AD18
Reset	0	0	0	0	0	0	0	0

Figure 22-71. Port AD1 Data Direction Register 1 (DDR1AD1)

Read: Anytime.

Write: Anytime.

This register configures pins PAD[15:08] as either input or output.

Table 22-62. DDR1AD1 Field Descriptions

Field	Description
7–0 DDR1AD1[15:8]	**Data Direction Port AD1 Register 1** 0 Associated pin is configured as input. 1 Associated pin is configured as output. **Note:** Due to internal synchronization circuits, it can take up to 2 bus clock cycles until the correct value is read on PTAD11 register, when changing the DDR1AD1 register. **Note:** To use the digital input function on port AD1 the ATD1 digital input enable register (ATD1DIEN1) has to be set to logic level “1”.

22.3.2.70 Port AD1 Reduced Drive Register 0 (RDR0AD1)

	7	6	5	4	3	2	1	0
R W	RDR0AD123	RDR0AD122	RDR0AD121	RDR0AD120	RDR0AD119	RDR0AD118	RDR0AD117	RDR0AD116
Reset	0	0	0	0	0	0	0	0

Figure 22-72. Port AD1 Reduced Drive Register 0 (RDR0AD1)

Read: Anytime.

Write: Anytime.

This register configures the drive strength of each PAD[23:16] output pin as either full or reduced. If the port is used as input this bit is ignored.

Table 22-63. RDR0AD1 Field Descriptions

Field	Description
7–0 RDR0AD1[23:16]	**Reduced Drive Port AD1 Register 0** 0 Full drive strength at output. 1 Associated pin drives at about 1/6 of the full drive strength.

22.3.2.71 Port AD1 Reduced Drive Register 1 (RDR1AD1)

	7	6	5	4	3	2	1	0
R W	RDR1AD115	RDR1AD114	RDR1AD113	RDR1AD112	RDR1AD111	RDR1AD110	RDR1AD19	RDR1AD18
Reset	0	0	0	0	0	0	0	0

Figure 22-73. Port AD1 Reduced Drive Register 1 (RDR1AD1)

Read: Anytime.

Write: Anytime.

This register configures the drive strength of each PAD[15:08] output pin as either full or reduced. If the port is used as input this bit is ignored.

Table 22-64. RDR1AD1 Field Descriptions

Field	Description
7–0 RDR1AD1[15:8]	**Reduced Drive Port AD1 Register 1** 0 Full drive strength at output. 1 Associated pin drives at about 1/6 of the full drive strength.

22.3.2.72 Port AD1 Pull Up Enable Register 0 (PER0AD1)

	7	6	5	4	3	2	1	0
R W	PER0AD123	PER0AD122	PER0AD121	PER0AD120	PER0AD119	PER0AD118	PER0AD117	PER0AD116
Reset	0	0	0	0	0	0	0	0

Figure 22-74. Port AD1 Pull Up Enable Register 0 (PER0AD1)

Read: Anytime.

Write: Anytime.

This register activates a pull-up device on the respective PAD[23:16] pin if the port is used as input. This bit has no effect if the port is used as output. Out of reset no pull-up device is enabled.

Table 22-65. PER0AD1 Field Descriptions

Field	Description
7–0 PER0AD1[23:16]	**Pull Device Enable Port AD1 Register 0** 0 Pull-up device is disabled. 1 Pull-up device is enabled.

22.3.2.73 Port AD1 Pull Up Enable Register 1 (PER1AD1)

	7	6	5	4	3	2	1	0
R W	PER1AD115	PER1AD114	PER1AD113	PER1AD112	PER1AD111	PER1AD110	PER1AD19	PER1AD18
Reset	0	0	0	0	0	0	0	0

Figure 22-75. Port AD1 Pull Up Enable Register 1 (PER1AD1)

Read: Anytime.

Write: Anytime.

This register activates a pull-up device on the respective PAD[15:08] pin if the port is used as input. This bit has no effect if the port is used as output. Out of reset no pull-up device is enabled.

Table 22-66. PER1AD1 Field Descriptions

Field	Description
7–0 PER1AD1[15:8]	**Pull Device Enable Port AD1 Register 1** 0 Pull-up device is disabled. 1 Pull-up device is enabled.

22.4 Functional Description

Each pin except PE0, PE1, and BKGD can act as general purpose I/O. In addition each pin can act as an output from the external bus interface module or a peripheral module or an input to the external bus interface module or a peripheral module.

A set of configuration registers is common to all ports with exceptions in the expanded bus interface and ATD ports (Table 22-67). All registers can be written at any time; however a specific configuration might not become active.

Example: Selecting a pull-up device

This device does not become active while the port is used as a push-pull output.

Table 22-67. Register Availability per Port[1]

Port	Data	Data Direction	Input	Reduced Drive	Pull Enable	Polarity Select	Wired-OR Mode	Interrupt Enable	Interrupt Flag
A	yes	yes	—	yes	yes	—	—	—	—
B	yes	yes	—			—	—	—	—
C	yes	yes	—			—	—	—	—
D	yes	yes	—			—	—	—	—
E	yes	yes	—			—	—	—	—
K	yes	yes	—			—	—	—	—
T	yes	yes	yes	yes	yes	—	—	—	—
S	yes	yes	yes	yes	yes	yes	yes	—	—
M	yes	yes	yes	yes	yes	yes	yes	—	—
P	yes	yes	yes	yes	yes	yes	—	yes	yes
H	yes	yes	yes	yes	yes	yes	—	yes	yes
J	yes	yes	yes	yes	yes	yes	—	yes	yes
AD0	yes	yes	—	yes	yes	—	—	—	—
AD1	yes	yes	—	yes	yes	—	—	—	—

[1] Each cell represents one register with individual configuration bits

22.4.1 Registers

22.4.1.1 Data Register

This register holds the value driven out to the pin if the pin is used as a general purpose I/O.

Writing to this register has only an effect on the pin if the pin is used as general purpose output. When reading this address, the buffered state of the pin is returned if the associated data direction register bit is set to “0”.

If the data direction register bits are set to logic level “1”, the contents of the data register is returned. This is independent of any other configuration (Figure 22-76).

22.4.1.2 Input Register

This is a read-only register and always returns the buffered state of the pin (Figure 22-76).

22.4.1.3 Data Direction Register

This register defines whether the pin is used as an input or an output.

If a peripheral module controls the pin the contents of the data direction register is ignored (Figure 22-76).

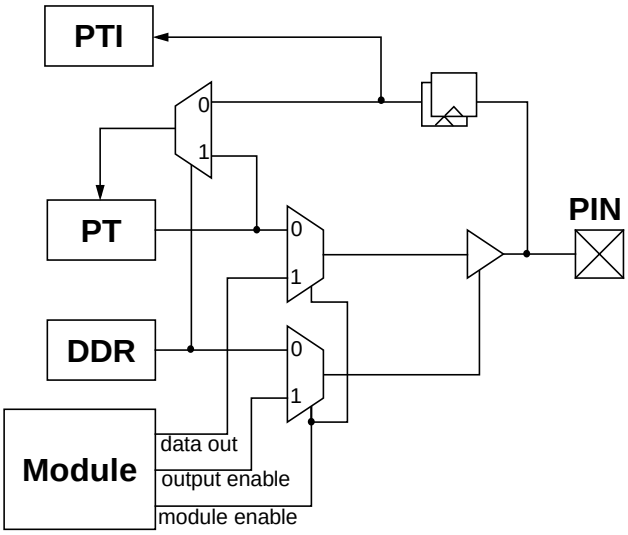

Figure 22-76. Illustration of I/O Pin Functionality

22.4.1.4 Reduced Drive Register

If the pin is used as an output this register allows the configuration of the drive strength.

22.4.1.5 Pull Device Enable Register

This register turns on a pull-up or pull-down device. It becomes active only if the pin is used as an input or as a wired-OR output.

22.4.1.6 Polarity Select Register

This register selects either a pull-up or pull-down device if enabled. It becomes active only if the pin is used as an input. A pull-up device can be activated if the pin is used as a wired-OR output. If the pin is used as an interrupt input this register selects the active interrupt edge.

22.4.1.7 Wired-OR Mode Register

If the pin is used as an output this register turns off the active high drive. This allows wired-OR type connections of outputs.

22.4.1.8 Interrupt Enable Register

If the pin is used as an interrupt input this register serves as a mask to the interrupt flag to enable/disable the interrupt.

22.4.1.9 Interrupt Flag Register

If the pin is used as an interrupt input this register holds the interrupt flag after a valid pin event.

22.4.1.10 Module Routing Register

This register supports the re-routing of the CAN0, CAN4, SPI0, SPI1, and SPI2 pins to alternative ports. This allows a software re-configuration of the pinouts of the different package options with respect to above peripherals.

NOTE

The purpose of the module routing register is to provide maximum flexibility for derivatives with a lower number of MSCAN and SPI modules.

Table 22-68. Module Implementations on Derivatives

Number of Modules	MSCAN Modules					SPI Modules		
	CAN0	CAN1	CAN2	CAN3	CAN4	SPI0	SPI1	SPI2
5	yes	yes	yes	yes	yes	—	—	—
4	yes	yes	yes	—	yes	—	—	—
3	yes	yes	—	—	yes	yes	yes	yes
2	yes	—	—	—	yes	yes	yes	—
1	yes	—	—	—	—	yes	—	—

22.4.2 Ports

22.4.2.1 BKGD Pin

The BKGD pin is associated with the S12X_BDM and S12X_EBI modules. During reset, the BKGD pin is used as MODC input.

22.4.2.2 Port A and B

Port A pins PA[7:0] and Port B pins PB[7:0] can be used for either general-purpose I/O, or, in 144-pin packages, also with the external bus interface. In this case port A and port B are associated with the external address bus outputs ADDR15–ADDR8 and ADDR7–ADDR0, respectively. PB0 is the ADDR0 or $\overline{\text{UDS}}$ output.

22.4.2.3 Port C and D

Port C pins PC[7:0] and port D pins PD[7:0] can be used for either general-purpose I/O, or, in 144-pin packages, also with the external bus interface. In this case port C and port D are associated with the external data bus inputs/outputs DATA15–DATA8 and DATA7–DATA0, respectively.

These pins are configured for reduced input threshold in certain operating modes (refer to S12X_EBI section).

NOTE

Port C and D are neither available in 112-pin nor in 80-pin packages.

22.4.2.4 Port E

Port E is associated with the external bus control outputs R/$\overline{W}$, $\overline{LSTRB}$, $\overline{LDS}$ and $\overline{RE}$, the free-running clock outputs ECLK and ECLK2X, as well as with the $\overline{TAGHI}$, $\overline{TAGLO}$, MODA and MODB and interrupt inputs $\overline{IRQ}$ and $\overline{XIRQ}$.

Port E pins PE[7:2] can be used for either general-purpose I/O or with the alternative functions.

Port E pin PE[7] an be used for either general-purpose I/O or as the free-running clock ECLKX2 output running at the core clock rate. The clock output is always enabled in emulation modes.

Port E pin PE[4] an be used for either general-purpose I/O or as the free-running clock ECLK output running at the bus clock rate or at the programmed divided clock rate. The clock output is always enabled in emulation modes.

Port E pin PE[1] can be used for either general-purpose input or as the level- or falling edge-sensitive $\overline{IRQ}$ interrupt input. $\overline{IRQ}$ will be enabled by setting the IRQEN configuration bit (Section 22.3.2.14, “IRQ Control Register (IRQCR)”) and clearing the I-bit in the CPU’s condition code register. It is inhibited at reset so this pin is initially configured as a simple input with a pull-up.

Port E pin PE[0] can be used for either general-purpose input or as the level-sensitive $\overline{XIRQ}$ interrupt input. $\overline{XIRQ}$ can be enabled by clearing the X-bit in the CPU’s condition code register. It is inhibited at reset so this pin is initially configured as a high-impedance input with a pull-up.

Port E pins PE[5] and PE[6] are configured for reduced input threshold in certain modes (refer to S12X_EBI section).

22.4.2.5 Port K

Port K pins PK[7:0] can be used for either general-purpose I/O, or, in 144-pin packages, also with the external bus interface. In this case port K pins PK[6:0] are associated with the external address bus outputs ADDR22–ADDR16 and PK7 is associated to the $\overline{EWAIT}$ input.

Port K pin PE[7] is configured for reduced input threshold in certain modes (refer to S12X_EBI section).

NOTE

Port K is not available in 80-pin packages. PK[6] is not available in 112-pin packages.

22.4.2.6 Port T

This port is associated with the ECT module. Port T pins PT[7:0] can be used for either general-purpose I/O, or with the channels of the enhanced capture timer.

22.4.2.7 Port S

This port is associated with SCI0, SCI1 and SPI0. Port S pins PS[7:0] can be used either for general-purpose I/O, or with the SCI and SPI subsystems.

The SPI0 pins can be re-routed. *Refer to Section 22.3.2.37, "Module Routing Register (MODRR)".*

NOTE

PS[7:4] are not available in 80-pin packages.

22.4.2.8 Port M

This port is associated with the SCI3, CAN4–0 and SPI0. Port M pins PM[7:0] can be used for either general purpose I/O, or with the CAN, SCI and SPI subsystems.

The CAN0, CAN4 and SPI0 pins can be re-routed. *Refer to Section 22.3.2.37, "Module Routing Register (MODRR)".*

NOTE

PM[7:6] are not available in 80-pin packages.

22.4.2.9 Port P

This port is associated with the PWM, SPI1 and SPI2. Port P pins PP[7:0] can be used for either general purpose I/O, or with the PWM and SPI subsystems.

The pins are shared between the PWM channels and the SPI1 and SPI2 modules. If the PWM is enabled the pins become PWM output channels with the exception of pin 7 which can be PWM input or output. If SPI1 or SPI2 are enabled and PWM is disabled, the respective pin configuration is determined by status bits in the SPI modules.

The SPI1 and SPI2 pins can be re-routed. *Refer to Section 22.3.2.37, "Module Routing Register (MODRR)".*

Port P offers 8 I/O pins with edge triggered interrupt capability in wired-OR fashion (Section 22.4.3, "Pin Interrupts").

NOTE

PP[6] is not available in 80-pin packages.

22.4.2.10 Port H

This port is associated with the SPI1, SPI2, SCI4, and SCI5. Port H pins PH[7:0] can be used for either general purpose I/O, or with the SPI and SCI subsystems. Port H pins can be used with the routed SPI1 and SPI2 modules. *Refer to Section 22.3.2.37, "Module Routing Register (MODRR)"*.

Port H offers 8 I/O pins with edge triggered interrupt capability (Section 22.4.3, "Pin Interrupts").

NOTE

Port H is not available in 80-pin packages.

22.4.2.11 Port J

This port is associated with the chip selects $\overline{CS0}$, $\overline{CS1}$, $\overline{CS2}$ and $\overline{CS3}$ as well as with CAN4, CAN0, IIC1, IIC0, and SCI2. Port J pins PJ[7:4] and PJ[2:0] can be used for either general purpose I/O, or with the CAN, IIC, or SCI subsystems. If IIC takes precedence the associated pins become IIC open-drain output pins. The CAN4 pins can be re-routed. *Refer to Section 22.3.2.37, "Module Routing Register (MODRR)"*.

Port J pins can be used with the routed CAN0 modules. *Refer to Section 22.3.2.37, "Module Routing Register (MODRR)"*.

Port J offers 7 I/O pins with edge triggered interrupt capability (Section 22.4.3, "Pin Interrupts").

NOTE

PJ[5,4,2] are not available in 112-pin packages. PJ[5,4,2,1,0] are not available in 80-pin packages.

22.4.2.12 Port AD0

This port is associated with the ATD0. Port AD0 pins PAD07–PAD00 can be used for either general purpose I/O, or with the ATD0 subsystem.

22.4.2.13 Port AD1

This port is associated with the ATD1. Port AD1 pins PAD23–PAD08 can be used for either general purpose I/O, or with the ATD1 subsystem.

NOTE

PAD[23:16] are not available in 112-pin packages. PAD[23:08] are not available in 80-pin packages.

22.4.3 Pin Interrupts

Ports P, H and J offer pin interrupt capability. The interrupt enable as well as the sensitivity to rising or falling edges can be individually configured on per-pin basis. All bits/pins in a port share the same interrupt vector. Interrupts can be used with the pins configured as inputs or outputs.

An interrupt is generated when a bit in the port interrupt flag register and its corresponding port interrupt enable bit are both set. The pin interrupt feature is also capable to wake up the CPU when it is in STOP or WAIT mode.

A digital filter on each pin prevents pulses (Figure 22-78) shorter than a specified time from generating an interrupt. The minimum time varies over process conditions, temperature and voltage (Figure 22-77 and Table 22-69).

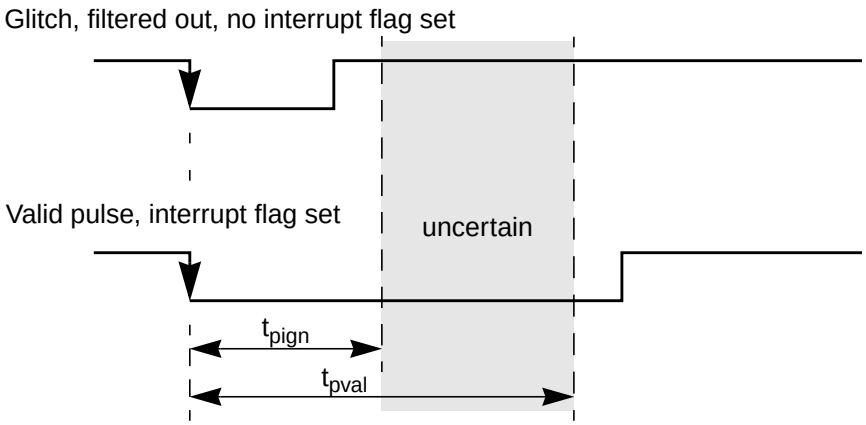

Figure 22-77. Interrupt Glitch Filter on Port P, H, and J (PPS = 0)

Table 22-69. Pulse Detection Criteria

Pulse	Mode		
	$\overline{STOP}$	Unit	STOP[1]
Ignored	$t_{pulse} \le 3$	Bus clocks	$t_{pulse} \le t_{pign}$
Uncertain	$3 < t_{pulse} < 4$	Bus clocks	$t_{pign} < t_{pulse} < t_{pval}$
Valid	$t_{pulse} \ge 4$	Bus clocks	$t_{pulse} \ge t_{pval}$

[1] These values include the spread of the oscillator frequency over temperature, voltage and process.

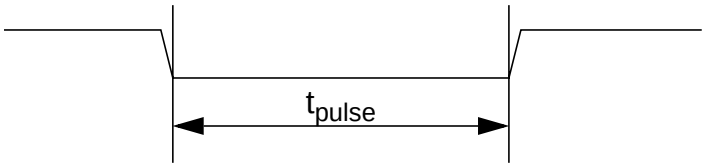

Figure 22-78. Pulse Illustration

A valid edge on an input is detected if 4 consecutive samples of a passive level are followed by 4 consecutive samples of an active level directly or indirectly.

The filters are continuously clocked by the bus clock in run and wait mode. In stop mode, the clock is generated by an RC-oscillator in the port integration module. To maximize current saving the RC oscillator runs only if the following condition is true on any pin individually:

Sample count <= 4 and interrupt enabled (PIE = 1) and interrupt flag not set (PIF = 0).

22.4.4 Expanded Bus Pin Functions

All peripheral ports T, S, M, P, H, J, AD0, and AD1 start up as general purpose inputs after reset.

Depending on the external mode pin condition, the external bus interface related ports A, B, C, D, E, and K start up as general purpose inputs on reset or are configured for their alternate functions.

Table 22-70 lists the pin functions in relationship with the different operating modes. If two entries per pin are displayed, a ‘mux’ indicates time-multiplexing between the two functions and an ‘or’ means that a configuration bit exists which can be altered after reset to select the respective function (displayed in *italics*). *Refer to S12X_EBI section for details.*

Table 22-70. Expanded Bus Pin Functions versus Operating Modes

Pin	Single-Chip Modes		Expanded Modes			
	Normal Single-Chip	Special Single-Chip	Normal Expanded	Emulation Single-Chip	Emulation Expanded	Special Test
PK7	GPIO	GPIO	GPIO *or* $\overline{EWAIT}$	GPIO	GPIO *or* $\overline{EWAIT}$	GPIO
PK[6:4]	GPIO	GPIO	ADDR[22:20] *or* *GPIO*	ADDR[22:20] mux ACC[2:0]	ADDR[22:20] mux ACC[2:0]	ADDR[22:20]
PK[3:0]	GPIO	GPIO	ADDR[19:16] *or* *GPIO*	ADDR[19:16] mux IQSTAT[3:0]	ADDR[19:16] mux IQSTAT[3:0]	ADDR[19:16]
PA[7:0]	GPIO	GPIO	ADDR[15:8] *or* *GPIO*	ADDR[15:8] mux IVD[15:8]	ADDR[15:8] mux IVD[15:8]	ADDR[15:8]
PB[7:1]	GPIO	GPIO	ADDR[7:1] *or* *GPIO*	ADDR[7:1] mux IVD[7:1]	ADDR[7:1] mux IVD[7:1]	ADDR[7:1]
PB0	GPIO	GPIO	UDS *or* *GPIO*	ADDR0 mux IVD0	ADDR0 mux IVD0	ADDR0
PC[7:0]	GPIO	GPIO	DATA[15:8] *or* *GPIO*	DATA[15:8]	DATA[15:8]	DATA[15:8] *or* *GPIO*
PD[7:0]	GPIO	GPIO	DATA[7:0]	DATA[7:0]	DATA[7:0]	DATA[7:0]
PE7	GPIO *or* *ECLKX2*	GPIO *or* *ECLKX2*	GPIO *or* *ECLKX2*	ECLKX2	ECLKX2	GPIO *or* *ECLKX2*

Table 22-70. Expanded Bus Pin Functions versus Operating Modes (continued)

Pin	Single-Chip Modes		Expanded Modes			
	Normal Single-Chip	Special Single-Chip	Normal Expanded	Emulation Single-Chip	Emulation Expanded	Special Test
PE6	GPIO	GPIO	GPIO	TAGHI	TAGHI	GPIO
PE5	GPIO	GPIO	RE	TAGLO	TAGLO	GPIO
PE4	GPIO *or* *ECLK*	ECLK *or* *GPIO*	ECLK *or* *GPIO*	ECLK	ECLK	ECLK *or* *GPIO*
PE3	GPIO	GPIO	$\overline{LDS}$ *or* *GPIO*	$\overline{LSTRB}$	$\overline{LSTRB}$	$\overline{LSTRB}$
PE2	GPIO	GPIO	$\overline{WE}$	R/$\overline{W}$	R/$\overline{W}$	R/$\overline{W}$
PJ5	GPIO	GPIO	GPIO *or* $\overline{CS2}$	GPIO	GPIO *or* $\overline{CS2}$	GPIO *or* $\overline{CS2}$
PJ4	GPIO	GPIO	GPIO *or* $\overline{CS0}$ [1]	GPIO	GPIO *or* $\overline{CS0}$ [1]	GPIO *or* $\overline{CS0}$
PJ2	GPIO	GPIO	GPIO *or* $\overline{CS1}$	GPIO	GPIO *or* $\overline{CS1}$	GPIO *or* $\overline{CS1}$
PJ0	GPIO	GPIO	GPIO *or* $\overline{CS3}$	GPIO	GPIO *or* $\overline{CS3}$	GPIO *or* $\overline{CS3}$

[1] Depending on ROMON bit. *Refer to Device Guide, S12X_EBI section and S12X_MMC section for details.*

22.4.5 Low-Power Options

22.4.5.1 Run Mode

No low-power options exist for this module in run mode.

22.4.5.2 Wait Mode

No low-power options exist for this module in wait mode.

22.4.5.3 Stop Mode

All clocks are stopped. There are asynchronous paths to generate interrupts from stop on port P, H, and J.

22.5 Initialization and Application Information

- It is not recommended to write PORTx and DDRx in a word access. When changing the register pins from inputs to outputs, the data may have extra transitions during the write access. Initialize the port data register before enabling the outputs.

- Power consumption will increase the more the voltages on general purpose input pins deviate from the supply voltages towards mid-range because the digital input buffers operate in the linear region.

Chapter 23
DQ256 Port Integration Module (S12XDQ256PIMV2)

Introduction

The S12XD family port integration module (below referred to as PIM) establishes the interface between the peripheral modules including the non-multiplexed external bus interface module (S12X_EBI) and the I/O pins for all ports. It controls the electrical pin properties as well as the signal prioritization and multiplexing on shared pins.

This document covers the description of:

- Port A, B used as address output of the S12X_EBI and Port C, D used as data I/O of the S12X_EBI
- Port E associated with the S12X_EBI control signals and the IRQ, XIRQ interrupt inputs
- Port K associated with address output and control signals of the S12X_EBI
- Port T connected to the Enhanced Capture Timer (ECT) module
- Port S associated with 2 SCI and 1 SPI modules
- Port M associated with 3 MSCAN modules
- Port P connected to the PWM and 2 SPI modules — inputs can be used as an external interrupt source
- Port H associated with 1 SCI module — inputs can be used as an external interrupt source
- Port J associated with 1 MSCAN, 1 SCI, and 1 IIC module — inputs can be used as an external interrupt source
- Port AD0 and AD1 associated with one 8-channel andone 16-channel ATD module

Most I/O pins can be configured by register bits to select data direction and drive strength, to enable and select pull-up or pull-down devices. Interrupts can be enabled on specific pins resulting in status flags.

The I/O's of 2 MSCAN and 3 SPI modules can be routed from their default location to alternative port pins.

NOTE

The implementation of the PIM is device dependent. Therefore some functions are not available on certain derivatives or 112-pin and 80-pin package options.

23.0.1 Features

A full-featured PIM module includes these distinctive registers:

- Data and data direction registers for Ports A, B, C, D, E, K, T, S, M, P, H, J, AD0, and AD1 when used as general-purpose I/O

- Control registers to enable/disable pull-device and select pull-ups/pull-downs on Ports T, S, M, P, H, and J on per-pin basis
- Control registers to enable/disable pull-up devices on Ports AD0, and AD1 on per-pin basis
- Single control register to enable/disable pull-ups on Ports A, B, C, D, E, and K on per-port basis and on BKGD pin
- Control registers to enable/disable reduced output drive on Ports T, S, M, P, H, J, AD0, and AD1 on per-pin basis
- Single control register to enable/disable reduced output drive on Ports A, B, C, D, E, and K on per-port basis
- Control registers to enable/disable open-drain (wired-OR) mode on Ports S and M
- Control registers to enable/disable pin interrupts on Ports P, H, and J
- Interrupt flag register for pin interrupts on Ports P, H, and J
- Control register to configure $\overline{\text{IRQ}}$ pin operation
- Free-running clock outputs

A standard port pin has the following minimum features:

- Input/output selection
- 5V output drive with two selectable drive strengths
- 5V digital and analog input
- Input with selectable pull-up or pull-down device

Optional features:

- Open drain for wired-OR connections
- Interrupt inputs with glitch filtering
- Reduced input threshold to support low voltage applications

23.0.2 Block Diagram

Figure 23-1 is a block diagram of the PIM.

- Signals shown in **Bold** are not available in 80-pin packages.
- Signals shown in ***Bold-Italics*** are neither available in 112-pin nor in 80-pin packages.
- Shaded labels denote alternative module routing ports.

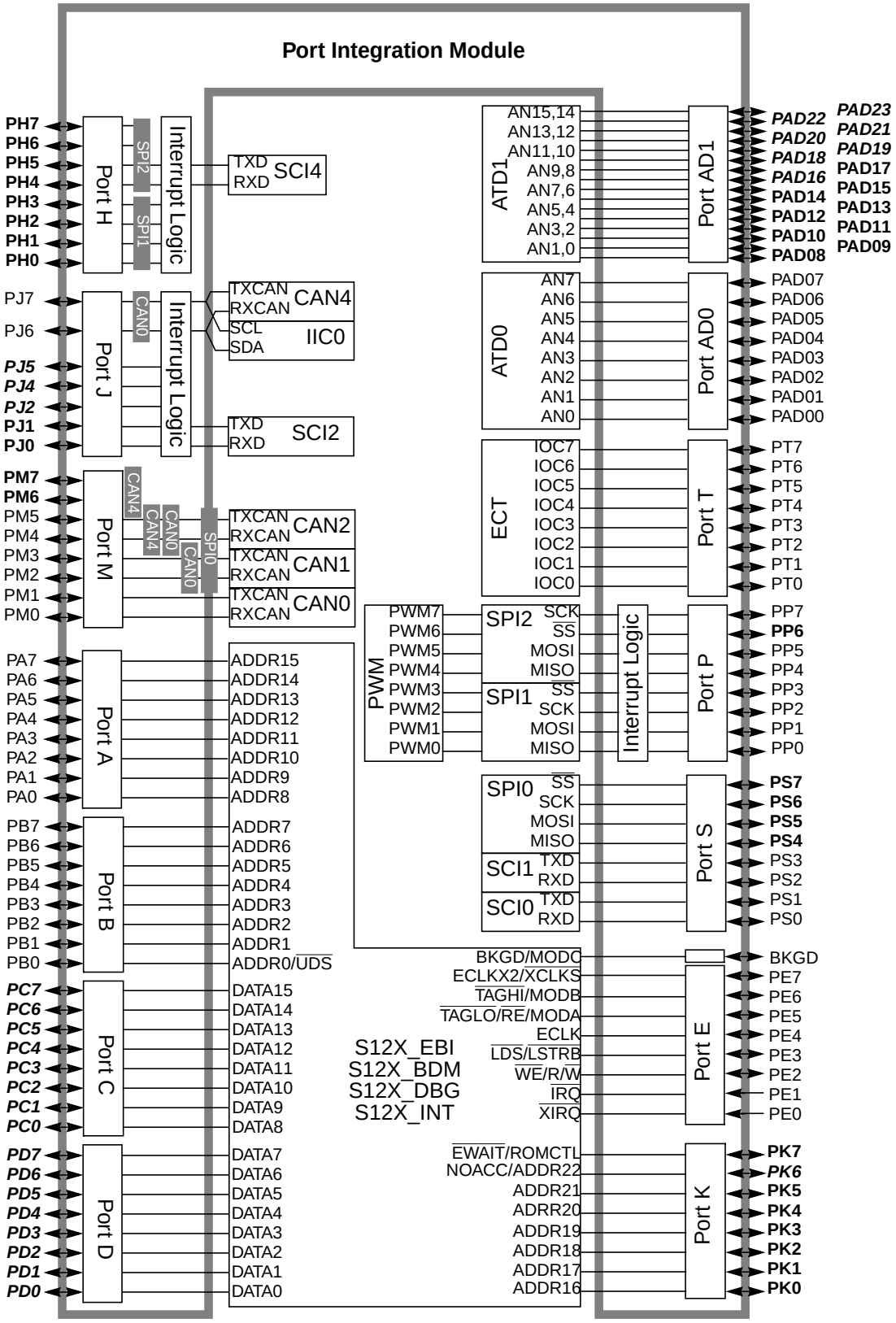

Figure 23-1. PIMXDQ256 Block Diagram

External Signal Description

This section lists and describes the signals that do connect off-chip.

23.0.3 Signal Properties

Table 23-1 shows all the pins and their functions that are controlled by the PIM. *Refer to Section , "Functional Description" for the availability of the individual pins in the different package options.*

NOTE

If there is more than one function associated with a pin, the priority is indicated by the position in the table from top (highest priority) to bottom (lowest priority).

Table 23-1. Pin Functions and Priorities (Sheet 1 of 7)

Port	Pin Name	Pin Function and Priority	I/O	Description	Pin Function after Reset
—	BKGD	MODC[1]	I	MODC input during $\overline{\text{RESET}}$	BKGD
		BKGD	I/O	S12X_BDM communication pin	
A	PA[7:0]	ADDR[15:8] mux IVD[15:8][2]	O	High-order external bus address output (multiplexed with IVIS data)	Mode dependent[3]
		GPIO	I/O	General-purpose I/O	
B	PB[7:1]	ADDR[7:1] mux IVD[7:1][2]	O	Low-order external bus address output (multiplexed with IVIS data)	Mode dependent[3]
		GPIO	I/O	General-purpose I/O	
	PB[0]	ADDR[0] mux IVD0[2]	O	Low-order external bus address output (multiplexed with IVIS data)	
		$\overline{\text{UDS}}$	O	Upper data strobe	
		GPIO	I/O	General-purpose I/O	
C	PC[7:0]	DATA[15:8]	I/O	High-order bidirectional data input/output Configurable for reduced input threshold	Mode dependent[3]
		GPIO	I/O	General-purpose I/O	
D	PD[7:0]	DATA[7:0]	I/O	Low-order bidirectional data input/output Configurable for reduced input threshold	Mode dependent[3]
		GPIO	I/O	General-purpose I/O	

Table 23-1. Pin Functions and Priorities (Sheet 2 of 7)

Port	Pin Name	Pin Function and Priority	I/O	Description	Pin Function after Reset
E	PE[7]	$\overline{\text{XCLKS}}$[1]	I	External clock selection input during $\overline{\text{RESET}}$	Mode dependent[3]
		ECLKX2	I	Free-running clock output at Core Clock rate (ECLK x 2)	
		GPIO	I/O	General-purpose I/O	
	PE[6]	MODB[1]	I	MODB input during $\overline{\text{RESET}}$	
		$\overline{\text{TAGHI}}$	I	Instruction tagging low pin Configurable for reduced input threshold	
		GPIO	I/O	General-purpose I/O	
	PE[5]	MODA[1]	I	MODA input during $\overline{\text{RESET}}$	
		$\overline{\text{RE}}$	O	Read enable signal	
		$\overline{\text{TAGLO}}$	I	Instruction tagging low pin Configurable for reduced input threshold	
		GPIO	I/O	General-purpose I/O	
	PE[4]	ECLK	O	Free-running clock output at the Bus Clock rate or programmable divided in normal modes	
		GPIO	I/O	General-purpose I/O	
	PE[3]	EROMCTL[1]	I	EROMON bit control input during $\overline{\text{RESET}}$	
		$\overline{\text{LSTRB}}$	O	Low strobe bar output	
		$\overline{\text{LDS}}$	O	Lower data strobe	
		GPIO	I/O	General-purpose I/O	
	PE[2]	R/$\overline{\text{W}}$	O	Read/write output for external bus	
		$\overline{\text{WE}}$	O	Write enable signal	
		GPIO	I/O	General-purpose I/O	
	PE[1]	$\overline{\text{IRQ}}$	I	Maskable level- or falling edge-sensitive interrupt input	
		GPIO	I/O	General-purpose I/O	
	PE[0]	$\overline{\text{XIRQ}}$	I	Non-maskable level-sensitive interrupt input	
		GPIO	I/O	General-purpose I/O	

Table 23-1. Pin Functions and Priorities (Sheet 3 of 7)

Port	Pin Name	Pin Function and Priority	I/O	Description	Pin Function after Reset
K	PK[7]	ROMCTL[1]	I	ROMON bit control input during $\overline{\text{RESET}}$	Mode dependent[3]
		$\overline{\text{EWAIT}}$	I	External Wait signal Configurable for reduced input threshold	
		GPIO	I/O	General-purpose I/O	
	PK[6:4]	ADDR[22:20] mux ACC[2:0][2]	O	Extended external bus address output (multiplexed with access master output)	
		GPIO	I/O	General-purpose I/O	
	PK[3:0]	ADDR[19:16] mux IQSTAT[3:0][2]	O	Extended external bus address output (multiplexed with instruction pipe status bits)	
		GPIO	I/O	General-purpose I/O	
T	PT[7:0]	IOC[7:0]	I/O	Enhanced Capture Timer Channels 7–0 input/output	GPIO
		GPIO	I/O	General-purpose I/O	
S	PS7	$\overline{\text{SS0}}$	I/O	Serial Peripheral Interface 0 slave select output in master mode, input in slave mode or master mode.	GPIO
		GPIO	I/O	General-purpose I/O	
	PS6	SCK0	I/O	Serial Peripheral Interface 0 serial clock pin	
		GPIO	I/O	General-purpose I/O	
	PS5	MOSI0	I/O	Serial Peripheral Interface 0 master out/slave in pin	
		GPIO	I/O	General-purpose I/O	
	PS4	MISO0	I/O	Serial Peripheral Interface 0 master in/slave out pin	
		GPIO	I/O	General-purpose I/O	
	PS3	TXD1	O	Serial Communication Interface 1 transmit pin	
		GPIO	I/O	General-purpose I/O	
	PS2	RXD1	I	Serial Communication Interface 1 receive pin	
		GPIO	I/O	General-purpose I/O	
	PS1	TXD0	O	Serial Communication Interface 0 transmit pin	
		GPIO	I/O	General-purpose I/O	
	PS0	RXD0	I	Serial Communication Interface 0 receive pin	
		GPIO	I/O	General-purpose I/O	

Table 23-1. Pin Functions and Priorities (Sheet 4 of 7)

Port	Pin Name	Pin Function and Priority	I/O	Description	Pin Function after Reset
M	PM7	TXCAN4	O	MSCAN4 transmit pin	GPIO
		GPIO	I/O	General-purpose I/O	
	PM6	RXCAN4	I	MSCAN4 receive pin	
		GPIO	I/O	General-purpose I/O	
	PM5	TXCAN2	O	MSCAN2 transmit pin	
		TXCAN0	O	MSCAN0 transmit pin	
		TXCAN4	O	MSCAN4 transmit pin	
		SCK0	I/O	Serial Peripheral Interface 0 serial clock pin *If CAN0 is routed to PM[3:2] the SPI0 can still be used in bidirectional master mode.*	
		GPIO	I/O	General-purpose I/O	
	PM4	RXCAN2	I	MSCAN2 receive pin	
		RXCAN0	I	MSCAN0 receive pin	
		RXCAN4	I	MSCAN4 receive pin	
		MOSI0	I/O	Serial Peripheral Interface 0 master out/slave in pin *If CAN0 is routed to PM[3:2] the SPI0 can still be used in bidirectional master mode.*	
		GPIO	I/O	General-purpose I/O	
	PM3	TXCAN1	O	MSCAN1 transmit pin	
		TXCAN0	O	MSCAN0 transmit pin	
		$\overline{SS0}$	I/O	Serial Peripheral Interface 0 slave select output in master mode, input for slave mode or master mode.	
		GPIO	I/O	General-purpose I/O	
	PM2	RXCAN1	I	MSCAN1 receive pin	
		RXCAN0	I	MSCAN0 receive pin	
		MISO0	I/O	Serial Peripheral Interface 0 master in/slave out pin	
		GPIO	I/O	General-purpose I/O	
	PM1	TXCAN0	O	MSCAN0 transmit pin	
		GPIO	I/O	General-purpose I/O	
	PM0	RXCAN0	I	MSCAN0 receive pin	
		GPIO	I/O	General-purpose I/O	

Table 23-1. Pin Functions and Priorities (Sheet 5 of 7)

Port	Pin Name	Pin Function and Priority	I/O	Description	Pin Function after Reset
P	PP7	PWM7	I/O	Pulse Width Modulator input/output channel 7	GPIO
		SCK2	I/O	Serial Peripheral Interface 2 serial clock pin	
		GPIO/KWP7	I/O	General-purpose I/O with interrupt	
	PP6	PWM6	O	Pulse Width Modulator output channel 6	
		$\overline{SS2}$	I/O	Serial Peripheral Interface 2 slave select output in master mode, input for slave mode or master mode.	
		GPIO/KWP6	I/O	General-purpose I/O with interrupt	
	PP5	PWM5	O	Pulse Width Modulator output channel 5	
		MOSI2	I/O	Serial Peripheral Interface 2 master out/slave in pin	
		GPIO/KWP5	I/O	General-purpose I/O with interrupt	
	PP4	PWM4	O	Pulse Width Modulator output channel 4	
		MISO2	I/O	Serial Peripheral Interface 2 master in/slave out pin	
		GPIO/KWP4	I/O	General-purpose I/O with interrupt	
	PP3	PWM3	O	Pulse Width Modulator output channel 3	
		$\overline{SS1}$	I/O	Serial Peripheral Interface 1 slave select output in master mode, input for slave mode or master mode.	
		GPIO/KWP3	I/O	General-purpose I/O with interrupt	
	PP2	PWM2	O	Pulse Width Modulator output channel 2	
		SCK1	I/O	Serial Peripheral Interface 1 serial clock pin	
		GPIO/KWP2	I/O	General-purpose I/O with interrupt	
	PP1	PWM1	O	Pulse Width Modulator output channel 1	
		MOSI1	I/O	Serial Peripheral Interface 1 master out/slave in pin	
		GPIO/KWP1	I/O	General-purpose I/O with interrupt	
	PP0	PWM0	O	Pulse Width Modulator output channel 0	
		MISO1	I/O	Serial Peripheral Interface 1 master in/slave out pin	
		GPIO/KWP0	I/O	General-purpose I/O with interrupt	

Table 23-1. Pin Functions and Priorities (Sheet 6 of 7)

Port	Pin Name	Pin Function and Priority	I/O	Description	Pin Function after Reset
H	PH7	$\overline{SS2}$	I/O	Serial Peripheral Interface 2 slave select output in master mode, input for slave mode or master mode	GPIO
		GPIO/KWH7	I/O	General-purpose I/O with interrupt	
	PH6	SCK2	I/O	Serial Peripheral Interface 2 serial clock pin	
		GPIO/KWH6	I/O	General-purpose I/O with interrupt	
	PH5	MOSI2	I/O	Serial Peripheral Interface 2 master out/slave in pin	
		TXD4	O	Serial Communication Interface 4 transmit pin	
		GPIO/KWH5	I/O	General-purpose I/O with interrupt	
	PH4	MISO2	I/O	Serial Peripheral Interface 2 master in/slave out pin	
		RXD4	I	Serial Communication Interface 4 receive pin	
		GPIO/KWH4	I/O	General-purpose I/O with interrupt	
	PH3	$\overline{SS1}$	I/O	Serial Peripheral Interface 1 slave select output in master mode, input for slave mode or master mode.	
		GPIO/KWH3	I/O	General-purpose I/O with interrupt	
	PH2	SCK1	I/O	Serial Peripheral Interface 1 serial clock pin	
		GPIO/KWH2	I/O	General-purpose I/O with interrupt	
	PH1	MOSI1	I/O	Serial Peripheral Interface 1 master out/slave in pin	
		GPIO/KWH1	I/O	General-purpose I/O with interrupt	
	PH0	MISO1	I/O	Serial Peripheral Interface 1 master in/slave out pin	
		GPIO/KWH0	I/O	General-purpose I/O with interrupt	

Table 23-1. Pin Functions and Priorities (Sheet 7 of 7)

Port	Pin Name	Pin Function and Priority	I/O	Description	Pin Function after Reset
J	PJ7	TXCAN4	O	MSCAN4 transmit pin	GPIO
		SCL0	O	Inter Integrated Circuit 0 serial clock line	
		TXCAN0	O	MSCAN0 transmit pin	
		GPIO/KWJ7	I/O	General-purpose I/O with interrupt	
	PJ6	RXCAN4	I	MSCAN4 receive pin	
		SDA0	I/O	Inter Integrated Circuit 0 serial data line	
		RXCAN0	I	MSCAN0 receive pin	
		GPIO/KWJ6	I/O	General-purpose I/O with interrupt	
	PJ5	$\overline{CS2}$	O	Chip select 2	
		GPIO/KWJ7	I/O	General-purpose I/O with interrupt	
	PJ4	$\overline{CS0}$	O	Chip select 0	
		GPIO/KWJ6	I/O	General-purpose I/O with interrupt	
	PJ2	$\overline{CS1}$	O	Chip select 1	
		GPIO/KWJ2	I/O	General-purpose I/O with interrupt	
	PJ1	TXD2	O	Serial Communication Interface 2 transmit pin	
		GPIO/KWJ1	I/O	General-purpose I/O with interrupt	
	PJ0	RXD2	I	Serial Communication Interface 2 receive pin	
		$\overline{CS3}$	O	Chip select 3	
		GPIO/KWJ0	I/O	General-purpose I/O with interrupt	
AD0	PAD[07:00]	GPIO	I/O	General-purpose I/O	GPIO
		AN[7:0]	I	ATD0 analog inputs	
AD1	PAD[23:08]	GPIO	I/O	General-purpose I/O	GPIO
		AN[15:0]	I	ATD1 analog inputs	

1. Function active when $\overline{RESET}$ asserted.
2. Only available in emulation modes or in Special Test Mode with IVIS on.
3. Refer also to Table 23-70 and S12X_EBI section.

Memory Map and Register Definition

This section provides a detailed description of all PIMregisters.

23.0.4 Module Memory Map

Table 23-2 shows the register map of the port integration module.

Table 23-2. PIM Memory Map (Sheet 1 of 3)

Address	Use	Access
0x0000	Port A Data Register (PORTA)	Read / Write
0x0001	Port B Data Register (PORTB)	Read / Write
0x0002	Port A Data Direction Register (DDRA)	Read / Write
0x0003	Port B Data Direction Register (DDRB)	Read / Write
0x0004	Port C Data Register (PORTC)	Read / Write
0x0005	Port D Data Register (PORTD)	Read / Write
0x0006	Port C Data Direction Register (DDRC)	Read / Write
0x0007	Port D Data Direction Register (DDRD)	Read / Write
0x0008	Port E Data Register (PORTE)	Read / Write[1]
0x0009	Port E Data Direction Register (DDRE)	Read / Write[1]
0x000A : 0x000B	Non-PIM Address Range	—
0x000C	Pull-up Up Control Register (PUCR)	Read / Write[1]
0x000D	Reduced Drive Register (RDRIV)	Read / Write[1]
0x000E : 0x001B	Non-PIM Address Range	—
0x001C	ECLK Control Register (ECLKCTL)	Read / Write[1]
0x001D	PIM Reserved	—
0x001E	IRQ Control Register (IRQCR)	Read / Write[1]
0x001F	PIM Reserved	—
0x0020 : 0x0031	Non-PIM Address Range	—
0x0032	Port K Data Register (PORTK)	Read / Write
0x0033	Port K Data Direction Register (DDRK)	Read / Write
0x0034 : 0x023F	Non-PIM Address Range	—
0x0240	Port T Data Register (PTT)	Read / Write
0x0241	Port T Input Register (PTIT)	Read
0x0242	Port T Data Direction Register (DDRT)	Read / Write
0x0243	Port T Reduced Drive Register (RDRT)	Read / Write
0x0244	Port T Pull Device Enable Register (PERT)	Read / Write
0x0245	Port T Polarity Select Register (PPST)	Read / Write
0x0246	PIM Reserved	—
0x0247	PIM Reserved	—

Table 23-2. PIM Memory Map (Sheet 2 of 3)

Address	Use	Access
0x0248	Port S Data Register (PTS)	Read / Write
0x0249	Port S Input Register (PTIS)	Read
0x024A	Port S Data Direction Register (DDRS)	Read / Write
0x024B	Port S Reduced Drive Register (RDRS)	Read / Write
0x024C	Port S Pull Device Enable Register (PERS)	Read / Write
0x024D	Port S Polarity Select Register (PPSS)	Read / Write
0x024E	Port S Wired-OR Mode Register (WOMS)	Read / Write
0x024F	PIM Reserved	—
0x0250	Port M Data Register (PTM)	Read / Write
0x0251	Port M Input Register (PTIM)	Read
0x0252	Port M Data Direction Register (DDRM)	Read / Write
0x0253	Port M Reduced Drive Register (RDRM)	Read / Write
0x0254	Port M Pull Device Enable Register (PERM)	Read / Write
0x0255	Port M Polarity Select Register (PPSM)	Read / Write
0x0256	Port M Wired-OR Mode Register (WOMM)	Read / Write
0x0257	Module Routing Register (MODRR)	Read / Write
0x0258	Port P Data Register (PTP)	Read / Write
0x0259	Port P Input Register (PTIP)	Read
0x025A	Port P Data Direction Register (DDRP)	Read / Write
0x025B	Port P Reduced Drive Register (RDRP)	Read / Write
0x025C	Port P Pull Device Enable Register (PERP)	Read / Write
0x025D	Port P Polarity Select Register (PPSP)	Read / Write
0x025E	Port P Interrupt Enable Register (PIEP)	Read / Write
0x025F	Port P Interrupt Flag Register (PIFP)	Read / Write
0x0260	Port H Data Register (PTH)	Read / Write
0x0261	Port H Input Register (PTIH)	Read
0x0262	Port H Data Direction Register (DDRH)	Read / Write
0x0263	Port H Reduced Drive Register (RDRH)	Read / Write
0x0264	Port H Pull Device Enable Register (PERH)	Read / Write
0x0265	Port H Polarity Select Register (PPSH)	Read / Write
0x0266	Port H Interrupt Enable Register (PIEH)	Read / Write
0x0267	Port H Interrupt Flag Register (PIFH)	Read / Write
0x0268	Port J Data Register (PTJ)	Read / Write[1]
0x0269	Port J Input Register (PTIJ)	Read
0x026A	Port J Data Direction Register (DDRJ)	Read / Write[1]

Table 23-2. PIM Memory Map (Sheet 3 of 3)

Address	Use	Access
0x026B	Port J Reduced Drive Register (RDRJ)	Read / Write[1]
0x026C	Port J Pull Device Enable Register (PERJ)	Read / Write[1]
0x026D	Port J Polarity Select Register (PPSJ)	Read / Write[1]
0x026E	Port J Interrupt Enable Register (PIEJ)	Read / Write[1]
0x026F	Port J Interrupt Flag Register (PIFJ)	Read / Write[1]
0x0270	PIM Reserved	—
0x0271	Port AD0 Data Register 1 (PT1AD0)	Read / Write
0x0272	PIM Reserved	—
0x0273	Port AD0 Data Direction Register 1 (DDR1AD0)	Read / Write
0x0274	PIM Reserved	—
0x0275	Port AD0 Reduced Drive Register 1 (RDR1AD0)	Read / Write
0x0276	PIM Reserved	—
0x0277	Port AD0 Pull Up Enable Register 1 (PER1AD0)	Read / Write
0x0278	Port AD1 Data Register 0 (PT0AD1)	Read / Write
0x0279	Port AD1 Data Register 1 (PT1AD1)	Read / Write
0x027A	Port AD1 Data Direction Register 0 (DDR0AD1)	Read / Write
0x027B	Port AD1 Data Direction Register 1 (DDR1AD1)	Read / Write
0x027C	Port AD1 Reduced Drive Register 0 (RDR0AD1)	Read / Write
0x027D	Port AD1 Reduced Drive Register 1 (RDR1AD1)	Read / Write
0x027E	Port AD1 Pull Up Enable Register 0 (PER0AD1)	Read / Write
0x027F	Port AD1 Pull Up Enable Register 1 (PER1AD1)	Read / Write

1. Write access not applicable for one or more register bits. Refer to Section 23.0.5, “Register Descriptions”.

23.0.5 Register Descriptions

Table 23-3 summarizes the effect on the various configuration bits, data direction (DDR), output level (IO), reduced drive (RDR), pull enable (PE), pull select (PS), and interrupt enable (IE) for the ports.

The configuration bit PS is used for two purposes:

1. Configure the sensitive interrupt edge (rising or falling), if interrupt is enabled.
2. Select either a pull-up or pull-down device if PE is active.

Table 23-3. Pin Configuration Summary

DDR	IO	RDR	PE	PS[1]	IE[2]	Function	Pull Device	Interrupt
0	x	x	0	x	0	Input	Disabled	Disabled
0	x	x	1	0	0	Input	Pull Up	Disabled
0	x	x	1	1	0	Input	Pull Down	Disabled
0	x	x	0	0	1	Input	Disabled	Falling edge
0	x	x	0	1	1	Input	Disabled	Rising edge
0	x	x	1	0	1	Input	Pull Up	Falling edge
0	x	x	1	1	1	Input	Pull Down	Rising edge
1	0	0	x	x	0	Output, full drive to 0	Disabled	Disabled
1	1	0	x	x	0	Output, full drive to 1	Disabled	Disabled
1	0	1	x	x	0	Output, reduced drive to 0	Disabled	Disabled
1	1	1	x	x	0	Output, reduced drive to 1	Disabled	Disabled
1	0	0	x	0	1	Output, full drive to 0	Disabled	Falling edge
1	1	0	x	1	1	Output, full drive to 1	Disabled	Rising edge
1	0	1	x	0	1	Output, reduced drive to 0	Disabled	Falling edge
1	1	1	x	1	1	Output, reduced drive to 1	Disabled	Rising edge

1. Always “0” on Port A, B, C, D, E, K, AD0, and AD1.
2. Applicable only on Port P, H, and J.

NOTE

All register bits in this module are completely synchronous to internal clocks during a register read.

Register Name		Bit 7	6	5	4	3	2	1	Bit 0
PORTA	R/W	PA7	PA6	PA5	PA4	PA3	PA2	PA1	PA0
PORTB	R/W	PB7	PB6	PB5	PB4	PB3	PB2	PB1	PB0
DDRA	R/W	DDRA7	DDRA6	DDRA5	DDRA4	DDRA3	DDRA2	DDRA1	DDRA0
DDRB	R/W	DDRB7	DDRB6	DDRB5	DDRB4	DDRB3	DDRB2	DDRB1	DDRB0

= Unimplemented or Reserved

Figure 23-2. PIM Register Summary (Sheet 1 of 7)

Register Name		Bit 7	6	5	4	3	2	1	Bit 0
PORTC	R/W	PC7	PC6	PC5	PC4	PC3	PC2	PC1	PC0
PORTD	R/W	PD7	PD6	PD5	PD4	PD3	PD2	PD1	PD0
DDRC	R/W	DDRC7	DDRC6	DDRC5	DDRC4	DDRC3	DDRC2	DDRC1	DDRC0
DDRD	R/W	DDRD7	DDRD6	DDRD5	DDRD4	DDRD3	DDRD2	DDRD1	DDRD0
PORTE	R	PE7	PE6	PE5	PE4	PE3	PE2	PE1	PE0
	W								
DDRE	R	DDRE7	DDRE6	DDRE5	DDRE4	DDRE3	DDRE2	0	0
	W								
Non-PIM Address Range	R/W	Non-PIM Address Range							
PUCR	R	PUPKE	BKPUE	0	PUPEE	PUPDE	PUPCE	PUPBE	PUPAE
	W								
RDRIV	R	RDPK	0	0	RDPE	RDPD	RDPC	RDPB	RDPA
	W								
Non-PIM Address Range	R/W	Non-PIM Address Range							
ECLKCTL	R	NECLK	NCLKX2	0	0	0	0	EDIV1	EDIV0
	W								
Reserved	R	0	0	0	0	0	0	0	0
	W								
IRQCR	R	IRQE	IRQEN	0	0	0	0	0	0
	W								
Reserved	R	0	0	0	0	0	0	0	0
	W								

= Unimplemented or Reserved

Figure 23-2. PIM Register Summary (Sheet 2 of 7)

Register Name		Bit 7	6	5	4	3	2	1	Bit 0
Non-PIM Address Range	R/W	Non-PIM Address Range							
PORTK	R/W	PK7	PK6	PK5	PK4	PK3	PK2	PK1	PK0
DDRK	R/W	DDRK7	DDRK6	DDRK5	DDRK4	DDRK3	DDRK2	DDRK1	DDRK0
Non-PIM Address Range	R/W	Non-PIM Address Range							
PTT	R/W	PTT7	PTT6	PTT5	PTT4	PTT3	PTT2	PTT1	PTT0
PTIT	R	PTIT7	PTIT6	PTIT5	PTIT4	PTIT3	PTIT2	PTIT1	PTIT0
	W								
DDRT	R/W	DDRT7	DDRT6	DDRT5	DDRT4	DDRT3	DDRT2	DDRT1	DDRT0
RDRT	R/W	RDRT7	RDRT6	RDRT5	RDRT4	RDRT3	RDRT2	RDRT1	RDRT0
PERT	R/W	PERT7	PERT6	PERT5	PERT4	PERT3	PERT2	PERT1	PERT0
PPST	R/W	PPST7	PPST6	PPST5	PPST4	PPST3	PPST2	PPST1	PPST0
Reserved	R	0	0	0	0	0	0	0	0
	W								
Reserved	R	0	0	0	0	0	0	0	0
	W								
PTS	R/W	PTS7	PTS6	PTS5	PTS4	PTS3	PTS2	PTS1	PTS0
PTIS	R	PTIS7	PTIS6	PTIS5	PTIS4	PTIS3	PTIS2	PTIS1	PTIS0
	W								

= Unimplemented or Reserved

Figure 23-2. PIM Register Summary (Sheet 3 of 7)

Register Name		Bit 7	6	5	4	3	2	1	Bit 0
DDRS	R/W	DDRS7	DDRS6	DDRS5	DDRS4	DDRS3	DDRS2	DDRS1	DDRS0
RDRS	R/W	RDRS7	RDRS6	RDRS5	RDRS4	RDRS3	RDRS2	RDRS1	RDRS0
PERS	R/W	PERS7	PERS6	PERS5	PERS4	PERS3	PERS2	PERS1	PERS0
PPSS	R/W	PPSS7	PPSS6	PPSS5	PPSS4	PPSS3	PPSS2	PPSS1	PPSS0
WOMS	R/W	WOMS7	WOMS6	WOMS5	WOMS4	WOMS3	WOMS2	WOMS1	WOMS0
Reserved	R	0	0	0	0	0	0	0	0
	W								
PTM	R/W	PTM7	PTM6	PTM5	PTM4	PTM3	PTM2	PTM1	PTM0
PTIM	R	PTIM7	PTIM6	PTIM5	PTIM4	PTIM3	PTIM2	PTIM1	PTIM0
	W								
DDRM	R/W	DDRM7	DDRM6	DDRM5	DDRM4	DDRM3	DDRM2	DDRM1	DDRM0
RDRM	R/W	RDRM7	RDRM6	RDRM5	RDRM4	RDRM3	RDRM2	RDRM1	RDRM0
PERM	R/W	PERM7	PERM6	PERM5	PERM4	PERM3	PERM2	PERM1	PERM0
PPSM	R/W	PPSM7	PPSM6	PPSM5	PPSM4	PPSM3	PPSM2	PPSM1	PPSM0
WOMM	R/W	WOMM7	WOMM6	WOMM5	WOMM4	WOMM3	WOMM2	WOMM1	WOMM0
MODRR	R	0	MODRR6	MODRR5	MODRR4	MODRR3	MODRR2	MODRR1	MODRR0
	W								
PTP	R/W	PTP7	PTP6	PTP5	PTP4	PTP3	PTP2	PTP1	PTP0

= Unimplemented or Reserved

Figure 23-2. PIM Register Summary (Sheet 4 of 7)

Register Name		Bit 7	6	5	4	3	2	1	Bit 0
PTIP	R	PTIP7	PTIP6	PTIP5	PTIP4	PTIP3	PTIP2	PTIP1	PTIP0
	W								
DDRP	R/W	DDRP7	DDRP6	DDRP5	DDRP4	DDRP3	DDRP2	DDRP1	DDRP0
RDRP	R/W	RDRP7	RDRP6	RDRP5	RDRP4	RDRP3	RDRP2	RDRP1	RDRP0
PERP	R/W	PERP7	PERP6	PERP5	PERP4	PERP3	PERP2	PERP1	PERP0
PPSP	R/W	PPSP7	PPSP6	PPSP5	PPSP4	PPSP3	PPSP2	PPSP1	PPSP0
PIEP	R/W	PIEP7	PIEP6	PIEP5	PIEP4	PIEP3	PIEP2	PIEP1	PIEP0
PIFP	R/W	PIFP7	PIFP6	PIFP5	PIFP4	PIFP3	PIFP2	PIFP1	PIFP0
PTH	R/W	PTH7	PTH6	PTH5	PTH4	PTH3	PTH2	PTH1	PTH0
PTIH	R	PTIH7	PTIH6	PTIH5	PTIH4	PTIH3	PTIH2	PTIH1	PTIH0
	W								
DDRH	R/W	DDRH7	DDRH6	DDRH5	DDRH4	DDRH3	DDRH2	DDRH1	DDRH0
RDRH	R/W	RDRH7	RDRH6	RDRH5	RDRH4	RDRH3	RDRH2	RDRH1	RDRH0
PERH	R/W	PERH7	PERH6	PERH5	PERH4	PERH3	PERH2	PERH1	PERH0
PPSH	R/W	PPSH7	PPSH6	PPSH5	PPSH4	PPSH3	PPSH2	PPSH1	PPSH0
PIEH	R/W	PIEH7	PIEH6	PIEH5	PIEH4	PIEH3	PIEH2	PIEH1	PIEH0
PIFH	R/W	PIFH7	PIFH6	PIFH5	PIFH4	PIFH3	PIFH2	PIFH1	PIFH0

= Unimplemented or Reserved

Figure 23-2. PIM Register Summary (Sheet 5 of 7)

Register Name		Bit 7	6	5	4	3	2	1	Bit 0
PTJ	R	PTJ7	PTJ6	PTJ5	PTJ4	0	PTJ2	PTJ1	PTJ0
	W								
PTIJ	R	PTIJ7	PTIJ6	PTIJ5	PTIJ4	0	PTIJ2	PTIJ1	PTIJ0
	W								
DDRJ	R	DDRJ7	DDRJ6	DDRJ5	DDRJ4	0	DDRJ2	DDRJ1	DDRJ0
	W								
RDRJ	R	RDRJ7	RDRJ6	RDRJ5	RDRJ4	0	RDRJ2	RDRJ1	RDRJ0
	W								
PERJ	R	PERJ7	PERJ6	PERJ5	PERJ4	0	PERJ2	PERJ1	PERJ0
	W								
PPSJ	R	PPSJ7	PPSJ6	PPSJ5	PPSJ4	0	PPSJ2	PPSJ1	PPSJ0
	W								
PIEJ	R	PIEJ7	PIEJ6	PIEJ5	PIEJ4	0	PIEJ2	PIEJ1	PIEJ0
	W								
PIFJ	R	PPSJ7	PPSJ6	PPSJ5	PPSJ4	0	PPSJ2	PPSJ1	PPSJ0
	W								
Reserved	R	0	0	0	0	0	0	0	0
	W								
PT1AD0	R	PT1AD07	PT1AD06	PT1AD05	PT1AD04	PT1AD03	PT1AD02	PT1AD01	PT1AD00
	W								
Reserved	R	0	0	0	0	0	0	0	0
	W								
DDR1AD0	R	DDR1AD07	DDR1AD06	DDR1AD05	DDR1AD04	DDR1AD03	DDR1AD02	DDR1AD01	DDR1AD00
	W								
Reserved	R	0	0	0	0	0	0	0	0
	W								
RDR1AD0	R	RDR1AD07	RDR1AD06	RDR1AD05	RDR1AD04	RDR1AD03	RDR1AD02	RDR1AD01	RDR1AD00
	W								
Reserved	R	0	0	0	0	0	0	0	0
	W								

= Unimplemented or Reserved

Figure 23-2. PIM Register Summary (Sheet 6 of 7)

Register Name		Bit 7	6	5	4	3	2	1	Bit 0
PER1AD0	R/W	PER1AD07	PER1AD06	PER1AD05	PER1AD04	PER1AD03	PER1AD02	PER1AD01	PER1AD00
PT0AD1	R/W	PT0AD123	PT0AD122	PT0AD121	PT0AD120	PT0AD119	PT0AD118	PT0AD117	PT0AD116
PT1AD1	R/W	PT1AD115	PT1AD114	PT1AD113	PT1AD112	PT1AD111	PT1AD110	PT1AD19	PT1AD18
DDR0AD1	R/W	DDR0AD123	DDR0AD122	DDR0AD121	DDR0AD120	DDR0AD119	DDR0AD118	DDR0AD117	DDR0AD116
DDR1AD1	R/W	DDR1AD115	DDR1AD114	DDR1AD113	DDR1AD112	DDR1AD111	DDR1AD110	DDR1AD19	DDR1AD18
RDR0AD1	R/W	RDR0AD123	RDR0AD122	RDR0AD121	RDR0AD120	RDR0AD119	RDR0AD118	RDR0AD117	RDR0AD116
RDR1AD1	R/W	RDR1AD115	RDR1AD114	RDR1AD113	RDR1AD112	RDR1AD111	RDR1AD110	RDR1AD19	RDR1AD18
PER0AD1	R/W	PER0AD123	PER0AD122	PER0AD121	PER0AD120	PER0AD119	PER0AD118	PER0AD117	PER0AD116
PER1AD1	R/W	PER1AD115	PER1AD114	PER1AD113	PER1AD112	PER1AD111	PER1AD110	PER1AD19	PER1AD18

= Unimplemented or Reserved

Figure 23-2. PIM Register Summary (Sheet 7 of 7)

23.0.5.1 Port A Data Register (PORTA)

	7	6	5	4	3	2	1	0
R/W	PA7	PA6	PA5	PA4	PA3	PA2	PA1	PA0
Alt. Function	ADDR15 mux IVD15	ADDR14 mux IVD14	ADDR13 mux IVD13	ADDR12 mux IVD12	ADDR11 mux IVD11	ADDR10 mux IVD10	ADDR9 mux IVD9	ADDR8 mux IVD8
Reset	0	0	0	0	0	0	0	0

Figure 23-3. Port A Data Register (PORTA)

Read: Anytime. In emulation modes, read operations will return the data from the external bus, in all other modes the data source is depending on the data direction value.

Write: Anytime. In emulation modes, write operations will also be directed to the external bus.

Table 23-4. PORTA Field Descriptions

Field	Description
7–0 PA[7:0]	Port A — Port A pins 7–0 are associated with address outputs ADDR15 through ADDR8 respectively inexpanded modesWhen this port is not used for external addresses, these pins can be used as general purpose I/O. If the data direction bits of the associated I/O pins are set to logic level “1”, a read returns the value of the port register, otherwise the buffered pin input state is read.

23.0.5.2 Port B Data Register (PORTB)

	7	6	5	4	3	2	1	0
R W	PB7	PB6	PB5	PB4	PB3	PB2	PB1	PB0
Reset	0	0	0	0	0	0	0	0

Figure 23-4. Port B Data Register (PORTB)

Read: Anytime.

Write: Anytime.

Table 23-5. PORTB Field Descriptions

Field	Description
7–0 PB[7:0]	**Port B** — Port B pins 7–0 are associated with address outputs ADDR7 through ADDR1 respectively in expanded modes. Pin 0 is associated with output ADDR0 in emulation modes and special test mode and with Upper Data Select ($\overline{UDS}$) in normal expanded mode. When this port is not used for external addresses, these pins can be used as general purpose I/O. If the data direction bits of the associated I/O pins are set to logic level “1”, a read returns the value of the port register, otherwise the buffered pin input state is read.

23.0.5.3 Port A Data Direction Register (DDRA)

	7	6	5	4	3	2	1	0
R W	DDRA7	DDRA6	DDRA5	DDRA4	DDRA3	DDRA2	DDRA1	DDRA0
Reset	0	0	0	0	0	0	0	0

Figure 23-5. Port A Data Direction Register (DDRA)

Read: Anytime. In emulation modes, read operations will return the data from the external bus, in all other modes the data source is depending on the data direction value.

Write: Anytime. In emulation modes, write operations will also be directed to the external bus.

Table 23-6. DDRA Field Descriptions

Field	Description
7–0 DDRA[7:0]	Data Direction Port A — This register controls the data direction for port A. When Port A is operating as a general purpose I/O port, DDRA determines whether each pin is an input or output. A logic level “1” causes the associated port pin to be an output and a logic level “0” causes the associated pin to be a high-impedance input. 0 Associated pin is configured as input. 1 Associated pin is configured as output. **Note:** Due to internal synchronization circuits, it can take up to 2 bus clock cycles until the correct value is read on PORTA after changing the DDRA register.

23.0.5.4 Port B Data Direction Register (DDRB)

	7	6	5	4	3	2	1	0
R W	DDRB7	DDRB6	DDRB5	DDRB4	DDRB3	DDRB2	DDRB1	DDRB0
Reset	0	0	0	0	0	0	0	0

Figure 23-6. Port B Data Direction Register (DDRB)

Read: Anytime. In emulation modes, read operations will return the data from the external bus, in all other modes the data source is depending on the data direction value.

Write: Anytime. In emulation modes, write operations will also be directed to the external bus.

Table 23-7. DDRB Field Descriptions

Field	Description
7–0 DDRB[7:0]	Data Direction Port B — This register controls the data direction for port B. When Port B is operating as a general purpose I/O port, DDRB determines whether each pin is an input or output. A logic level “1” causes the associated port pin to be an output and a logic level “0” causes the associated pin to be a high-impedance input. 0 Associated pin is configured as input. 1 Associated pin is configured as output. **Note:** Due to internal synchronization circuits, it can take up to 2 bus clock cycles until the correct value is read on PORTB after changing the DDRB register.

23.0.5.5 Port C Data Register (PORTC)

	7	6	5	4	3	2	1	0
R W	PC7	PC6	PC5	PC4	PC3	PC2	PC1	PC0
Reset	0	0	0	0	0	0	0	0

Figure 23-7. Port C Data Register (PORTC)

Read: Anytime. In emulation modes, read operations will return the data from the external bus, in all other modes the data source is depending on the data direction value.

Write: Anytime. In emulation modes, write operations will also be directed to the external bus.

Table 23-8. PORTC Field Descriptions

Field	Description
7–0 PC[7:0]	Port C — Port C pins 7–0 can be used as general purpose I/O. If the data direction bits of the associated I/O pins are set to logic level “1”, a read returns the value of the port register, otherwise the buffered pin input state is read.

23.0.5.6 Port D Data Register (PORTD)

	7	6	5	4	3	2	1	0
R W	PD7	PD6	PD5	PD4	PD3	PD2	PD1	PD0
Reset	0	0	0	0	0	0	0	0

Figure 23-8. Port D Data Register (PORTD)

Read: Anytime. In emulation modes, read operations will return the data from the external bus, in all other modes the data source is depending on the data direction value.

Write: Anytime. In emulation modes, write operations will also be directed to the external bus.

Table 23-9. PORTD Field Descriptions

Field	Description
7–0 PD[7:0]	Port D — Port D pins 7–0. — If the data direction bits of the associated I/O pins are set to logic level “1”, a read returns the value of the port register, otherwise the buffered pin input state is read.

23.0.5.7 Port C Data Direction Register (DDRC)

	7	6	5	4	3	2	1	0
R W	DDRC7	DDRC6	DDRC5	DDRC4	DDRC3	DDRC2	DDRC1	DDRC0
Reset	0	0	0	0	0	0	0	0

Figure 23-9. Port C Data Direction Register (DDRC)

Read: Anytime. In emulation modes, read operations will return the data from the external bus, in all other modes the data are read from this register.

Write: Anytime. In emulation modes, write operations will also be directed to the external bus.

Table 23-10. DDRC Field Descriptions

Field	Description
7–0 DDRC[7:0]	Data Direction Port C — This register controls the data direction for port C. DDRC determines whether each pin is an input or output. A logic level “1” causes the associated port pin to be an output and a logic level “0” causes the associated pin to be a high-impedance input. 0 Associated pin is configured as input. 1 Associated pin is configured as output. **Note:** Due to internal synchronization circuits, it can take up to 2 bus clock cycles until the correct value is read on PORTC after changing the DDRC register.

23.0.5.8 Port D Data Direction Register (DDRD)

	7	6	5	4	3	2	1	0
R W	DDRD7	DDRD6	DDRD5	DDRD4	DDRD3	DDRD2	DDRD1	DDRD0
Reset	0	0	0	0	0	0	0	0

Figure 23-10. Port D Data Direction Register (DDRD)

Read: Anytime. In emulation modes, read operations will return the data from the external bus, in all other modes the data are read from this register.

Write: Anytime. In emulation modes, write operations will also be directed to the external bus.

Table 23-11. DDRD Field Descriptions

Field	Description
7–0 DDRD[7:0]	Data Direction Port D — This register controls the data direction for port D. DDRD determines whether each pin is an input or output. A logic level “1” causes the associated port pin to be an output and a logic level “0” causes the associated pin to be a high-impedance input. 0 Associated pin is configured as input. 1 Associated pin is configured as output. **Note:** Due to internal synchronization circuits, it can take up to 2 bus clock cycles until the correct value is read on PORTD after changing the DDRD register.

23.0.5.9 Port E Data Register (PORTE)

	7	6	5	4	3	2	1	0
R W	PE7	PE6	PE5	PE4	PE3	PE2	PE1	PE0
Alt. Func.	$\overline{\text{XCLKS}}$ or ECLKX2	MODB or $\overline{\text{TAGHI}}$	MODA or $\overline{\text{RE}}$ or $\overline{\text{TAGLO}}$	ECLK	EROMCTL or $\overline{\text{LSTRB}}$ or $\overline{\text{LDS}}$	R/$\overline{\text{W}}$ or $\overline{\text{WE}}$	$\overline{\text{IRQ}}$	$\overline{\text{XIRQ}}$
Reset	0	0	0	0	0	0	—[1]	—[1]

= Unimplemented or Reserved

Figure 23-11. Port E Data Register (PORTE)

1. These registers are reset to zero. Two bus clock cycles after reset release the register values are updated with the associated pin values.

Read: Anytime. In emulation modes, read operations will return the data from the external bus, in all other modes the data source is depending on the data direction value.

Write: Anytime. In emulation modes, write operations will also be directed to the external bus.

Table 23-12. PORTE Field Descriptions

Field	Description
7–0 PE[7:0]	**Port E** — Port E bits 7–0 are associated with external bus control signals and interrupt inputs. These include mode select (MODB, MODA), E clock, double frequency E clock, Instruction Tagging High and Low ($\overline{\text{TAGHI}}$, $\overline{\text{TAGLO}}$), Read/Write (R/$\overline{\text{W}}$), Read Enable and Write Enable ($\overline{\text{RE}}$, $\overline{\text{WE}}$), Lower Data Select ($\overline{\text{LDS}}$), $\overline{\text{IRQ}}$, and $\overline{\text{XIRQ}}$. When not used for any of these specific functions, Port E pins 7–2 can be used as general purpose I/O and pins 1–0 can be used as general purpose inputs. If the data direction bits of the associated I/O pins are set to logic level “1”, a read returns the value of the port register, otherwise the buffered pin input state is read. Pins 6 and 5 are inputs with enabled pull-down devices while RESET pin is low. Pins 7 and 3 are inputs with enabled pull-up devices while RESET pin is low.

23.0.5.10 Port E Data Direction Register (DDRE)

	7	6	5	4	3	2	1	0
R	DDRE7	DDRE6	DDRE5	DDRE4	DDRE3	DDRE2	0	0
W								
Reset	0	0	0	0	0	0	0	0

= Unimplemented or Reserved

Figure 23-12. Port E Data Direction Register (DDRE)

Read: Anytime. In emulation modes, read operations will return the data from the external bus, in all other modes the data source is depending on the data direction value.

Write: Anytime. In emulation modes, write operations will also be directed to the external bus.

Table 23-13. DDRE Field Descriptions

Field	Description
7–0 DDRE[7:2]	Data Direction Port E — his register controls the data direction for port E. When Port E is operating as a general purpose I/O port, DDRE determines whether each pin is an input or output. A logic level “1” causes the associated port pin to be an output and a logic level “0” causes the associated pin to be a high-impedance input. Port E bit 1 (associated with $\overline{\text{IRQ}}$) and bit 0 (associated with $\overline{\text{XIRQ}}$) cannot be configured as outputs. Port E, bits 1 and 0, can be read regardless of whether the alternate interrupt function is enabled. 0 Associated pin is configured as input. 1 Associated pin is configured as output. **Note:** Due to internal synchronization circuits, it can take up to 2 bus clock cycles until the correct value is read on PORTE after changing the DDRE register.

23.0.5.11 S12X_EBI Ports, BKGD, VREGEN Pin Pull-up Control Register (PUCR)

	7	6	5	4	3	2	1	0
R	PUPKE	BKPUE	0	PUPEE	PUPDE	PUPCE	PUPBE	PUPAE
W								
Reset	1	1	0	1	0	0	0	0

= Unimplemented or Reserved

Figure 23-13. S12X_EBI Ports, BKGD, VREGEN Pin Pull-up Control Register (PUCR)

Read: Anytime in single-chip modes.

Write: Anytime, except BKPUE which is writable in special test mode only.

This register is used to enable pull-up devices for the associated ports A, B, C, D, E, and K. Pull-up devices are assigned on a per-port basis and apply to any pin in the corresponding port currently configured as an input.

Table 23-14. PUCR Field Descriptions

Field	Description
7 PUPKE	**Pull-up Port K Enable** 0 Port K pull-up devices are disabled. 1 Enable pull-up devices for Port K input pins.
6 BKPUE	**BKGD and VREGEN Pin Pull-up Enable** 0 BKGD and V_{REGEN} pull-up devices are disabled. 1 Enable pull-up devices on BKGD and V_{REGEN} pins.
4 PUPEE	**Pull-up Port E Enable** 0 Port E pull-up devices on bit 7, 4–0 are disabled. 1 Enable pull-up devices for Port E input pins bits 7, 4–0. **Note:** Bits 5 and 6 of Port E have pull-down devices which are only enabled during reset. This bit has no effect on these pins.
3 PUPDE	**Pull-up Port D Enable** 0 Port D pull-up devices are disabled. 1 Enable pull-up devices for all Port D input pins.
2 PUPCE	**Pull-up Port C Enable** 0 Port C pull-up devices are disabled. 1 Enable pull-up devices for all Port C input pins.
1 PUPBE	**Pull-up Port B Enable** 0 Port B pull-up devices are disabled. 1 Enable pull-up devices for all Port B input pins.
0 PUPAE	**Pull-up Port A Enable** 0 Port A pull-up devices are disabled. 1 Enable pull-up devices for all Port A input pins.

23.0.5.12 S12X_EBI Ports Reduced Drive Register (RDRIV)

	7	6	5	4	3	2	1	0
R	RDPK	0	0	RDPE	RDPD	RDPC	RDPB	RDPA
W								
Reset	0	0	0	0	0	0	0	0

= Unimplemented or Reserved

Figure 23-14. S12X_EBI Ports Reduced Drive Register (RDRIV)

Read: Anytime. In emulation modes, read operations will return the data from the external bus, in all other modes the data source is depending on the data direction value.

Write: Anytime. In emulation modes, write operations will also be directed to the external bus.

This register is used to select reduced drive for the pins associated with ports A, B, E, and K. If enabled, the pins drive at about 1/6 of the full drive strength. The reduced drive function is independent of which function is being used on a particular pin.

The reduced drive functionality does not take effect on the pins in emulation modes.

Table 23-15. RDRIV Field Descriptions

Field	Description
7 RDPK	**Reduced Drive of Port K** 0 All port K output pins have full drive enabled. 1 All port K output pins have reduced drive enabled.
4 RDPE	**Reduced Drive of Port E** 0 All port E output pins have full drive enabled. 1 All port E output pins have reduced drive enabled.
3 RDPD	**Reduced Drive of Port D** 0 All port D output pins have full drive enabled. 1 All port D output pins have reduced drive enabled.
2 RDPC	**Reduced Drive of Port C** 0 All port C output pins have full drive enabled. 1 All port C output pins have reduced drive enabled.
1 RDPB	**Reduced Drive of Port B** 0 All port B output pins have full drive enabled. 1 All port B output pins have reduced drive enabled.
0 RDPA	**Reduced Drive of Ports A** 0 All Port A output pins have full drive enabled. 1 All port A output pins have reduced drive enabled.

23.0.5.13 ECLK Control Register (ECLKCTL)

	7	6	5	4	3	2	1	0	
R	NECLK	NCLKX2	0	0	0	0	EDIV1	EDIV0	
W									
Reset[1]	Mode Dependent	1	0	0	0	0	0	0	Mode
SS	0	1	0	0	0	0	0	0	Special Single-Chip
ES	1	1	0	0	0	0	0	0	Emulation Single-Chip
ST	0	1	0	0	0	0	0	0	Special Test
EX	0	1	0	0	0	0	0	0	Emulation Expanded
NS	1	1	0	0	0	0	0	0	Normal Single-Chip
NX	0	1	0	0	0	0	0	0	Normal Expanded

= Unimplemented or Reserved

Figure 23-15. ECLK Control Register (ECLKCTL)

1. Reset values in emulation modes are identical to those of the target mode.

Read: Anytime. In emulation modes, read operations will return the data from the external bus, in all other modes the data source is depending on the data direction value.

Write: Anytime. In emulation modes, write operations will also be directed to the external bus.

The ECLKCTL register is used to control the availability of the free-running clocks and the free-running clock divider.

Table 23-16. ECLKCTL Field Descriptions

Field	Description
7 NECLK	**No ECLK** — This bit controls the availability of a free-running clock on the ECLK pin. Clock output is always active in emulation modes and if enabled in all other operating modes. 0 ECLK enabled 1 ECLK disabled

Table 23-16. ECLKCTL Field Descriptions (continued)

Field	Description
6 NCLKX2	**No ECLKX2** — This bit controls the availability of a free-running clock on the ECLKX2 pin. This clock has a fixed rate of twice the internal bus clock. Clock output is always active in emulation modes and if enabled in all other operating modes. 0 ECLKX2 is enabled 1 ECLKX2 is disabled
1–0 EDIV[1:0]	**Free-Running ECLK Divider** — These bits determine the rate of the free-running clock on the ECLK pin. The usage of the bits is shown in Table 23-17. Divider is always disabled in emulation modes and active as programmed in all other operating modes.

Table 23-17. Free-Running ECLK Clock Rate

EDIV[1:0]	Rate of Free-Running ECLK
00	ECLK = Bus clock rate
01	ECLK = Bus clock rate divided by 2
10	ECLK = Bus clock rate divided by 3
11	ECLK = Bus clock rate divided by 4

23.0.5.14 IRQ Control Register (IRQCR)

	7	6	5	4	3	2	1	0
R	IRQE	IRQEN	0	0	0	0	0	0
W								
Reset	0	1	0	0	0	0	0	0

= Unimplemented or Reserved

Figure 23-16. IRQ Control Register (IRQCR)

Read: See individual bit descriptions below.

Write: See individual bit descriptions below.

Table 23-18. IRQCR Field Descriptions

Field	Description
7 IRQE	**IRQ Select Edge Sensitive Only** Special modes: Read or write anytime. Normal and emulation modes: Read anytime, write once. 0 $\overline{\text{IRQ}}$ configured for low level recognition. 1 $\overline{\text{IRQ}}$ configured to respond only to falling edges. Falling edges on the $\overline{\text{IRQ}}$ pin will be detected anytime IRQE = 1 and will be cleared only upon a reset or the servicing of the $\overline{\text{IRQ}}$ interrupt.
6 IRQEN	**External IRQ Enable** Read or write anytime. 0 External $\overline{\text{IRQ}}$ pin is disconnected from interrupt logic. 1 External $\overline{\text{IRQ}}$ pin is connected to interrupt logic.

23.0.5.15 Port K Data Register (PORTK)

	7	6	5	4	3	2	1	0
R W	PK7	PK6	PK5	PK4	PK3	PK2	PK1	PK0
Alt. Func.	ROMCTL or $\overline{\text{EWAIT}}$	ADDR22 mux NOACC	ADDR21	ADDR20	ADDR19 mux IQSTAT3	ADDR18 mux IQSTAT2	ADDR17 mux IQSTAT1	ADDR16 mux IQSTAT0
Reset	0	0	0	0	0	0	0	0

Figure 23-17. Port K Data Register (PORTK)

Read: Anytime. In emulation modes, read operations will return the data from the external bus, in all other modes the data source is depending on the data direction value.

Write: Anytime. In emulation modes, write operations will also be directed to the external bus.

Table 23-19. PORTK Field Descriptions

Field	Description
7–0 PK[7:0]	Port K — Port K pins 7–0 are associated with external bus control signals and internal memory expansion emulation pins. These include ADDR22-ADDR16, No-Access (NOACC), External Wait ($\overline{\text{EWAIT}}$) and instruction pipe signals IQSTAT3-IQSTAT0. Bits 6-0 carry the external addresses in all expanded modes. In emulation or special test mode with internal visibility enabled the address is multiplexed with the alternate functions NOACC and IQSTAT on the respective pins. In single-chip modes the port pins can be used as general-purpose I/O. If the data direction bits of the associated I/O pins are set to logic level “1”, a read returns the value of the port register, otherwise the buffered pin input state is read.

23.0.5.16 Port K Data Direction Register (DDRK)

	7	6	5	4	3	2	1	0
R W	DDRK7	DDRK6	DDRK5	DDRK4	DDRK3	DDRK2	DDRK1	DDRK0
Reset	0	0	0	0	0	0	0	0

Figure 23-18. Port K Data Direction Register (DDRK)

Read: Anytime. In emulation modes, read operations will return the data from the external bus, in all other modes the data source is depending on the data direction value.

Write: Anytime. In emulation modes, write operations will also be directed to the external bus.

This register controls the data direction for port K. When Port K is operating as a general purpose I/O port, DDRK determines whether each pin is an input or output. A logic level “1” causes the associated port pin to be an output and a logic level “0” causes the associated pin to be a high-impedance input.

Table 23-20. DDRK Field Descriptions

Field	Description
7–0 DDRK[7:0]	**Data Direction Port K** 0 Associated pin is configured as input. 1 Associated pin is configured as output. **Note:** Due to internal synchronization circuits, it can take up to 2 bus clock cycles until the correct value is read on PORTK after changing the DDRK register.

23.0.5.17 Port T Data Register (PTT)

	7	6	5	4	3	2	1	0
R W	PTT7	PTT6	PTT5	PTT4	PTT3	PTT2	PTT1	PTT0
ECT	IOC7	IOC6	IOC5	IOC4	IOC3	IOC2	IOC1	IOC0
Reset	0	0	0	0	0	0	0	0

Figure 23-19. Port T Data Register (PTT)

Read: Anytime.

Write: Anytime.

Table 23-21. PTT Field Descriptions

Field	Description
7–0 PTT[7:0]	**Port T** — Port T bits 7–0 are associated with ECT channels IOC7–IOC0 (*refer to ECT section*). When not used with the ECT, these pins can be used as general purpose I/O. If the data direction bits of the associated I/O pins are set to logic level “1”, a read returns the value of the port register, otherwise the buffered pin input state is read.

23.0.5.18 Port T Input Register (PTIT)

	7	6	5	4	3	2	1	0
R	PTIT7	PTIT6	PTIT5	PTIT4	PTIT3	PTIT2	PTIT1	PTIT0
W								
Reset[1]	—	—	—	—	—	—	—	—

= Unimplemented or Reserved

Figure 23-20. Port T Input Register (PTIT)

1. These registers are reset to zero. Two bus clock cycles after reset release the register values are updated with the associated pin values.

Read: Anytime.

Write: Never, writes to this register have no effect.

Table 23-22. PTIT Field Descriptions

Field	Description
7–0 PTIT[7:0]	**Port T Input** — This register always reads back the buffered state of the associated pins. This can also be used to detect overload or short circuit conditions on output pins.

23.0.5.19 Port T Data Direction Register (DDRT)

	7	6	5	4	3	2	1	0
R W	DDRT7	DDRT6	DDRT5	DDRT4	DDRT3	DDRT2	DDRT1	DDRT0
Reset	0	0	0	0	0	0	0	0

Figure 23-21. Port T Data Direction Register (DDRT)

Read: Anytime.

Write: Anytime.

This register configures each port T pin as either input or output.

The ECT forces the I/O state to be an output for each timer port associated with an enabled output compare. In this case the data direction bits will not change.

The DDRT bits revert to controlling the I/O direction of a pin when the associated timer output compare is disabled.

The timer input capture always monitors the state of the pin.

Table 23-23. DDRT Field Descriptions

Field	Description
7–0 DDRT[7:0]	**Data Direction Port T** 0 Associated pin is configured as input. 1 Associated pin is configured as output. **Note:** Due to internal synchronization circuits, it can take up to 2 bus clock cycles until the correct value is read on PTT or PTIT registers, when changing the DDRT register.

23.0.5.20 Port T Reduced Drive Register (RDRT)

	7	6	5	4	3	2	1	0
R W	RDRT7	RDRT6	RDRT5	RDRT4	RDRT3	RDRT2	RDRT1	RDRT0
Reset	0	0	0	0	0	0	0	0

Figure 23-22. Port T Reduced Drive Register (RDRT)

Read: Anytime.

Write: Anytime.

This register configures the drive strength of each port T output pin as either full or reduced. If the port is used as input this bit is ignored.

Table 23-24. RDRT Field Descriptions

Field	Description
7–0 RDRT[7:0]	**Reduced Drive Port T** 0 Full drive strength at output. 1 Associated pin drives at about 1/6 of the full drive strength.

23.0.5.21 Port T Pull Device Enable Register (PERT)

	7	6	5	4	3	2	1	0
R W	PERT7	PERT6	PERT5	PERT4	PERT3	PERT2	PERT1	PERT0
Reset	0	0	0	0	0	0	0	0

Figure 23-23. Port T Pull Device Enable Register (PERT)

Read: Anytime.

Write: Anytime.

This register configures whether a pull-up or a pull-down device is activated, if the port is used as input. This bit has no effect if the port is used as output. Out of reset no pull device is enabled.

Table 23-25. PERT Field Descriptions

Field	Description
7–0 PERT[7:0]	**Pull Device Enable Port T** 0 Pull-up or pull-down device is disabled. 1 Either a pull-up or pull-down device is enabled.

23.0.5.22 Port T Polarity Select Register (PPST)

	7	6	5	4	3	2	1	0
R W	PPST7	PPST6	PPST5	PPST4	PPST3	PPST2	PPST1	PPST0
Reset	0	0	0	0	0	0	0	0

Figure 23-24. Port T Polarity Select Register (PPST)

Read: Anytime.

Write: Anytime.

This register selects whether a pull-down or a pull-up device is connected to the pin.

Table 23-26. PPST Field Descriptions

Field	Description
7–0 PPST[7:0]	**Pull Select Port T** 0 A pull-up device is connected to the associated port T pin, if enabled by the associated bit in register PERT and if the port is used as input. 1 A pull-down device is connected to the associated port T pin, if enabled by the associated bit in register PERT and if the port is used as input.

23.0.5.23 Port S Data Register (PTS)

	7	6	5	4	3	2	1	0
R W	PTS7	PTS6	PTS5	PTS4	PTS3	PTS2	PTS1	PTS0
SCI/SPI	$\overline{SS0}$	SCK0	MOSI0	MISO0	TXD1	RXD1	TXD0	RXD0
Reset	0	0	0	0	0	0	0	0

Figure 23-25. Port S Data Register (PTS)

Read: Anytime.

Write: Anytime.

Port S pins 7–4 are associated with the SPI0. The SPI0 pin configuration is determined by several status bits in the SPI0 module. *Refer to SPI section for details.* When not used with the SPI0, these pins can be used as general purpose I/O.

Port S bits 3–0 are associated with the SCI1 and SCI0. The SCI ports associated with transmit pins 3 and 1 are configured as outputs if the transmitter is enabled. The SCI ports associated with receive pins 2 and 0 are configured as inputs if the receiver is enabled. *Refer to SCI section for details.* When not used with the SCI, these pins can be used as general purpose I/O.

If the data direction bits of the associated I/O pins are set to logic level “1”, a read returns the value of the port register, otherwise the buffered pin input state is read.

23.0.5.24 Port S Input Register (PTIS)

	7	6	5	4	3	2	1	0
R	PTIS7	PTIS6	PTIS5	PTIS4	PTIS3	PTIS2	PTIS1	PTIS0
W								
Reset[1]	—	—	—	—	—	—	—	—

= Unimplemented or Reserved

Figure 23-26. Port S Input Register (PTIS)

1. These registers are reset to zero. Two bus clock cycles after reset release the register values are updated with the associated pin values.

Read: Anytime.

Write: Never, writes to this register have no effect.

This register always reads back the buffered state of the associated pins. This also can be used to detect overload or short circuit conditions on output pins.

23.0.5.25 Port S Data Direction Register (DDRS)

	7	6	5	4	3	2	1	0
R W	DDRS7	DDRS6	DDRS5	DDRS4	DDRS3	DDRS2	DDRS1	DDRS0
Reset	0	0	0	0	0	0	0	0

Figure 23-27. Port S Data Direction Register (DDRS)

Read: Anytime.

Write: Anytime.

This register configures each port S pin as either input or output.

If SPI0 is enabled, the SPI0 determines the pin direction. *Refer to SPI section for details*.

If the associated SCI transmit or receive channel is enabled this register has no effect on the pins. The pin is forced to be an output if a SCI transmit channel is enabled, it is forced to be an input if the SCI receive channel is enabled.

The DDRS bits revert to controlling the I/O direction of a pin when the associated channel is disabled.

Table 23-27. DDRS Field Descriptions

Field	Description
7–0 DDRS[7:0]	**Data Direction Port S** 0 Associated pin is configured as input. 1 Associated pin is configured as output. **Note:** Due to internal synchronization circuits, it can take up to 2 bus clock cycles until the correct value is read on PTS or PTIS registers, when changing the DDRS register.

23.0.5.26 Port S Reduced Drive Register (RDRS)

	7	6	5	4	3	2	1	0
R W	RDRS7	RDRS6	RDRS5	RDRS4	RDRS3	RDRS2	RDRS1	RDRS0
Reset	0	0	0	0	0	0	0	0

Figure 23-28. Port S Reduced Drive Register (RDRS)

Read: Anytime.

Write: Anytime.

This register configures the drive strength of each port S output pin as either full or reduced. If the port is used as input this bit is ignored.

Table 23-28. RDRS Field Descriptions

Field	Description
7–0 RDRS[7:0]	**Reduced Drive Port S** 0 Full drive strength at output. 1 Associated pin drives at about 1/6 of the full drive strength.

23.0.5.27 Port S Pull Device Enable Register (PERS)

	7	6	5	4	3	2	1	0
R W	PERS7	PERS6	PERS5	PERS4	PERS3	PERS2	PERS1	PERS0
Reset	1	1	1	1	1	1	1	1

Figure 23-29. Port S Pull Device Enable Register (PERS)

Read: Anytime.

Write: Anytime.

This register configures whether a pull-up or a pull-down device is activated, if the port is used as input or as output in wired-OR (open drain) mode. This bit has no effect if the port is used as push-pull output. Out of reset a pull-up device is enabled.

Table 23-29. PERS Field Descriptions

Field	Description
7–0 PERS[7:0]	**Pull Device Enable Port S** 0 Pull-up or pull-down device is disabled. 1 Either a pull-up or pull-down device is enabled.

23.0.5.28 Port S Polarity Select Register (PPSS)

	7	6	5	4	3	2	1	0
R W	PPSS7	PPSS6	PPSS5	PPSS4	PPSS3	PPSS2	PPSS1	PPSS0
Reset	0	0	0	0	0	0	0	0

Figure 23-30. Port S Polarity Select Register (PPSS)

Read: Anytime.

Write: Anytime.

This register selects whether a pull-down or a pull-up device is connected to the pin.

Table 23-30. PPSS Field Descriptions

Field	Description
7–0 PPSS[7:0]	**Pull Select Port S** 0 A pull-up device is connected to the associated port S pin, if enabled by the associated bit in register PERS and if the port is used as input or as wired-OR output. 1 A pull-down device is connected to the associated port S pin, if enabled by the associated bit in register PERS and if the port is used as input.

23.0.5.29 Port S Wired-OR Mode Register (WOMS)

	7	6	5	4	3	2	1	0
R W	WOMS7	WOMS6	WOMS5	WOMS4	WOMS3	WOMS2	WOMS1	WOMS0
Reset	0	0	0	0	0	0	0	0

Figure 23-31. Port S Wired-OR Mode Register (WOMS)

Read: Anytime.

Write: Anytime.

This register configures the output pins as wired-OR. If enabled the output is driven active low only (open-drain). A logic level of “1” is not driven. It applies also to the SPI and SCI outputs and allows a multipoint connection of several serial modules. These bits have no influence on pins used as inputs.

Table 23-31. WOMS Field Descriptions

Field	Description
7–0 WOMS[7:0]	**Wired-OR Mode Port S** 0 Output buffers operate as push-pull outputs. 1 Output buffers operate as open-drain outputs.

23.0.5.30 Port M Data Register (PTM)

	7	6	5	4	3	2	1	0
R W	PTM7	PTM6	PTM5	PTM4	PTM3	PTM2	PTM1	PTM0
CAN			TXCAN2	RXCAN2	TXCAN1	RXCAN1	TXCAN0	RXCAN0
Routed CAN0			TXCAN0	RXCAN0	TXCAN0	RXCAN0		
Routed CAN4	TXCAN4	RXCAN4	TXCAN4	RXCAN4				
Routed SPI0			SCK0	MOSI0	$\overline{SS0}$	MISO0		
Reset	0	0	0	0	0	0	0	0

Figure 23-32. Port M Data Register (PTM)

Read: Anytime.

Write: Anytime.

Port M pins 7–0 are associated with the CAN0, CAN1, CAN2, as well as the routed CAN0, CAN4, and SPI0 modules. When not used with any of the peripherals, these pins can be used as general purpose I/O.

If the data direction bits of the associated I/O pins are set to logic level “1”, a read returns the value of the port register, otherwise the buffered pin input state is read.

Table 23-32. PTM Field Descriptions

Field	Description
7–6 PTM[7:6]	The CAN4 function (TXCAN4 and RXCAN4) takes precedence over the general purpose I/O function if the CAN4 module is enabled. *Refer to MSCAN section for details.*
5–4 PTM[5:4]	The CAN2 function (TXCAN2 and RXCAN2) takes precedence over the routed CAN0, routed CAN4, the routed SPI0 and the general purpose I/O function if the CAN2 module is enabled. The routed CAN0 function (TXCAN0 and RXCAN0) takes precedence over the routed CAN4, the routed SPI0 and the general purpose I/O function if the routed CAN0 module is enabled. The routed CAN4 function (TXCAN4 and RXCAN4) takes precedence over the routed SPI0 and general purpose I/O function if the routed CAN4 module is enabled. *Refer to MSCAN section for details.* The routed SPI0 function (SCK0 and MOSI0) takes precedence of the general purpose I/O function if the routed SPI0 is enabled. *Refer to SPI section for details.*
3–2 PTM[3:2]	The CAN1 function (TXCAN1 and RXCAN1) takes precedence over the routed CAN0, the routed SPI0 and the general purpose I/O function if the CAN1 module is enabled.The routed CAN0 function (TXCAN0 and RXCAN0) takes precedence over the routed SPI0 and the general purpose I/O function if the routed CAN0 module is enabled. *Refer to MSCAN section for details.* The routed SPI0 function ($\overline{SS0}$ and MISO0) takes precedence of the general purpose I/O function if the routed SPI0 is enabled and not in bidirectional mode. *Refer to SPI section for details.*
1–0 PTM[1:0]	The CAN0 function (TXCAN0 and RXCAN0) takes precedence over the general purpose I/O function if the CAN0 module is enabled. *Refer to MSCAN section for details.*

23.0.5.31 Port M Input Register (PTIM)

	7	6	5	4	3	2	1	0
R	PTIM7	PTIM6	PTIM5	PTIM4	PTIM3	PTIM2	PTIM1	PTIM0
W								
Reset[1]	—	—	—	—	—	—	—	—

= Unimplemented or Reserved

Figure 23-33. Port M Input Register (PTIM)

1. These registers are reset to zero. Two bus clock cycles after reset release the register values are updated with the associated pin values.

Read: Anytime.

Write: Never, writes to this register have no effect.

This register always reads back the buffered state of the associated pins. This can also be used to detect overload or short circuit conditions on output pins.

23.0.5.32 Port M Data Direction Register (DDRM)

	7	6	5	4	3	2	1	0
R W	DDRM7	DDRM6	DDRM5	DDRM4	DDRM3	DDRM2	DDRM1	DDRM0
Reset	0	0	0	0	0	0	0	0

Figure 23-34. Port M Data Direction Register (DDRM)

Read: Anytime.

Write: Anytime.

This register configures each port M pin as either input or output.

The CAN forces the I/O state to be an output for each port line associated with an enabled output (TXCAN). also forces the I/O state to be an input for each port line associated with an enabled input (RXCAN). In those cases the data direction bits will not change.

The DDRM bits revert to controlling the I/O direction of a pin when the associated peripheral module is disabled.

Table 23-33. DDRM Field Descriptions

Field	Description
7–0 DDRM[7:0]	**Data Direction Port M** 0 Associated pin is configured as input. 1 Associated pin is configured as output. **Note:** Due to internal synchronization circuits, it can take up to 2 bus clock cycles until the correct value is read on PTM or PTIM registers, when changing the DDRM register.

23.0.5.33 Port M Reduced Drive Register (RDRM)

	7	6	5	4	3	2	1	0
R W	RDRM7	RDRM6	RDRM5	RDRM4	RDRM3	RDRM2	RDRM1	RDRM0
Reset	0	0	0	0	0	0	0	0

Figure 23-35. Port M Reduced Drive Register (RDRM)

Read: Anytime.

Write: Anytime.

This register configures the drive strength of each Port M output pin as either full or reduced. If the port is used as input this bit is ignored.

Table 23-34. RDRM Field Descriptions

Field	Description
7–0 RDRM[7:0]	**Reduced Drive Port M** 0 Full drive strength at output. 1 Associated pin drives at about 1/6 of the full drive strength.

23.0.5.34 Port M Pull Device Enable Register (PERM)

	7	6	5	4	3	2	1	0
R W	PERM7	PERM6	PERM5	PERM4	PERM3	PERM2	PERM1	PERM0
Reset	0	0	0	0	0	0	0	0

Figure 23-36. Port M Pull Device Enable Register (PERM)

Read: Anytime.

Write: Anytime.

This register configures whether a pull-up or a pull-down device is activated, if the port is used as input or wired-OR output. This bit has no effect if the port is used as push-pull output. Out of reset no pull device is enabled.

Table 23-35. PERM Field Descriptions

Field	Description
7–0 PERM[7:0]	**Pull Device Enable Port M** 0 Pull-up or pull-down device is disabled. 1 Either a pull-up or pull-down device is enabled.

23.0.5.35 Port M Polarity Select Register (PPSM)

	7	6	5	4	3	2	1	0
R W	PPSM7	PPSM6	PPSM5	PPSM4	PPSM3	PPSM2	PPSM1	PPSM0
Reset	0	0	0	0	0	0	0	0

Figure 23-37. Port M Polarity Select Register (PPSM)

Read: Anytime.

Write: Anytime.

This register selects whether a pull-down or a pull-up device is connected to the pin. If CAN is active, a pull-up device can be activated on the related RXCAN inputs, but not a pull-down.

Table 23-36. PPSM Field Descriptions

Field	Description
7–0 PPSM[7:0]	**Pull Select Port M** 0 A pull-up device is connected to the associated port M pin, if enabled by the associated bit in register PERM and if the port is used as general purpose or RXCAN input. 1 A pull-down device is connected to the associated port M pin, if enabled by the associated bit in register PERM and if the port is used as a general purpose but not as RXCAN.

23.0.5.36 Port M Wired-OR Mode Register (WOMM)

	7	6	5	4	3	2	1	0
R W	WOMM7	WOMM6	WOMM5	WOMM4	WOMM3	WOMM2	WOMM1	WOMM0
Reset	0	0	0	0	0	0	0	0

Figure 23-38. Port M Wired-OR Mode Register (WOMM)

Read: Anytime.

Write: Anytime.

This register configures the output pins as wired-OR. If enabled the output is driven active low only (open-drain). A logic level of “1” is not driven. It applies also to the CAN outputs and allows a multipoint connection of several serial modules. This bit has no influence on pins used as inputs.

Table 23-37. WOMM Field Descriptions

Field	Description
7–0 WOMM[7:0]	**Wired-OR Mode Port M** 0 Output buffers operate as push-pull outputs. 1 Output buffers operate as open-drain outputs.

23.0.5.37 Module Routing Register (MODRR)

	7	6	5	4	3	2	1	0
R	0	MODRR6	MODRR5	MODRR4	MODRR3	MODRR2	MODRR1	MODRR0
W								
Reset	0	0	0	0	0	0	0	0

= Unimplemented or Reserved

Figure 23-39. Module Routing Register (MODRR)

Read: Anytime.

Write: Anytime.

This register configures the re-routing of CAN0, CAN4, SPI0, SPI1, and SPI2 on alternative ports.

Table 23-38. Module Routing Summary

Module	MODRR							Related Pins			
	6	5	4	3	2	1	0	RXCAN		TXCAN	
CAN0	x	x	x	x	x	0	0	PM0		PM1	
	x	x	x	x	x	0	1	PM2		PM3	
	x	x	x	x	x	1	0	PM4		PM5	
	x	x	x	x	x	1	1	PJ6		PJ7	
CAN4	x	x	x	0	0	x	x	PJ6		PJ7	
	x	x	x	0	1	x	x	PM4		PM5	
	x	x	x	1	0	x	x	PM6		PM7	
	x	x	x	1	1	x	x	Reserved			
								MISO	MOSI	SCK	$\overline{SS}$
SPI0	x	x	0	x	x	x	x	PS4	PS5	PS6	PS7
	x	x	1	x	x	x	x	PM2	PM4	PM5	PM3
SPI1	x	0	x	x	x	x	x	PP0	PP1	PP2	PP3
	x	1	x	x	x	x	x	PH0	PH1	PH2	PH3
SPI2	0	x	x	x	x	x	x	PP4	PP5	PP7	PP6
	1	x	x	x	x	x	x	PH4	PH5	PH6	PH7

23.0.5.38 Port P Data Register (PTP)

	7	6	5	4	3	2	1	0
R W	PTP7	PTP6	PTP5	PTP4	PTP3	PTP2	PTP1	PTP0
PWM	PWM7	PWM6	PWM5	PWM4	PWM3	PWM2	PWM1	PWM0
SPI	SCK2	$\overline{SS2}$	MOSI2	MISO2	$\overline{SS1}$	SCK1	MOSI1	MISO1
Reset	0	0	0	0	0	0	0	0

Figure 23-40. Port P Data Register (PTP)

Read: Anytime.

Write: Anytime.

Port P pins 7–0 are associated with the PWM as well as the SPI1 and SPI2. These pins can be used as general purpose I/O when not used with any of the peripherals.

If the data direction bits of the associated I/O pins are set to logic level “1”, a read returns the value of the port register, otherwise the buffered pin input state is read.

The PWM function takes precedence over the general purpose I/O and the SPI2 or SPI1 function if the associated PWM channel is enabled. While channels 6-0 are output only if the respective channel is enabled, channel 7 can be PWM output or input if the shutdown feature is enabled. *Refer to PWM section for details.*

The SPI2 function takes precedence over the general purpose I/O function if enabled. *Refer to SPI section for details.* The SPI1 function takes precedence over the general purpose I/O function if enabled. *Refer to SPI section for details.*

23.0.5.39 Port P Input Register (PTIP)

	7	6	5	4	3	2	1	0
R	PTIP7	PTIP6	PTIP5	PTIP4	PTIP3	PTIP2	PTIP1	PTIP0
W								
Reset[1]	—	—	—	—	—	—	—	—

= Unimplemented or Reserved

Figure 23-41. Port P Input Register (PTIP)

1. These registers are reset to zero. Two bus clock cycles after reset release the register values are updated with the associated pin values.

Read: Anytime.

Write: Never, writes to this register have no effect.

This register always reads back the buffered state of the associated pins. This can also be used to detect overload or short circuit conditions on output pins.

23.0.5.40 Port P Data Direction Register (DDRP)

	7	6	5	4	3	2	1	0
R W	DDRP7	DDRP6	DDRP5	DDRP4	DDRP3	DDRP2	DDRP1	DDRP0
Reset	0	0	0	0	0	0	0	0

Figure 23-42. Port P Data Direction Register (DDRP)

Read: Anytime.

Write: Anytime.

This register configures each port P pin as either input or output.

If the associated PWM channel or SPI module is enabled this register has no effect on the pins.

The PWM forces the I/O state to be an output for each port line associated with an enabled PWM7–0 channel. Channel 7 can force the pin to input if the shutdown feature is enabled. *Refer to PWM section for details.*

If SPI is enabled, the SPI determines the pin direction. *Refer to SPI section for details.*

The DDRP bits revert to controlling the I/O direction of a pin when the associated peripherals are disabled.

Table 23-39. DDRP Field Descriptions

Field	Description
7–0 DDRP[7:0]	**Data Direction Port P** 0 Associated pin is configured as input. 1 Associated pin is configured as output. **Note:** Due to internal synchronization circuits, it can take up to 2 bus clock cycles until the correct value is read on PTP or PTIP registers, when changing the DDRP register.

23.0.5.41 Port P Reduced Drive Register (RDRP)

	7	6	5	4	3	2	1	0
R W	RDRP7	RDRP6	RDRP5	RDRP4	RDRP3	RDRP2	RDRP1	RDRP0
Reset	0	0	0	0	0	0	0	0

Figure 23-43. Port P Reduced Drive Register (RDRP)

Read: Anytime.

Write: Anytime.

This register configures the drive strength of each port P output pin as either full or reduced. If the port is used as input this bit is ignored.

Table 23-40. RDRP Field Descriptions

Field	Description
7–0 RDRP[7:0]	**Reduced Drive Port P** 0 Full drive strength at output. 1 Associated pin drives at about 1/6 of the full drive strength.

23.0.5.42 Port P Pull Device Enable Register (PERP)

	7	6	5	4	3	2	1	0
R W	PERP7	PERP6	PERP5	PERP4	PERP3	PERP2	PERP1	PERP0
Reset	0	0	0	0	0	0	0	0

Figure 23-44. Port P Pull Device Enable Register (PERP)

Read: Anytime.

Write: Anytime.

This register configures whether a pull-up or a pull-down device is activated, if the port is used as input. This bit has no effect if the port is used as output. Out of reset no pull device is enabled.

Table 23-41. PERP Field Descriptions

Field	Description
7–0 PERP[7:0]	**Pull Device Enable Port P** 0 Pull-up or pull-down device is disabled. 1 Either a pull-up or pull-down device is enabled.

23.0.5.43 Port P Polarity Select Register (PPSP)

	7	6	5	4	3	2	1	0
R W	PPSP7	PPSP6	PPSP5	PPSP4	PPSP3	PPSP2	PPSP1	PPSP0
Reset	0	0	0	0	0	0	0	0

Figure 23-45. Port P Polarity Select Register (PPSP)

Read: Anytime.

Write: Anytime.

This register serves a dual purpose by selecting the polarity of the active interrupt edge as well as selecting a pull-up or pull-down device if enabled.

Table 23-42. PPSP Field Descriptions

Field	Description
7–0 PPSP[7:0]	**Polarity Select Port P** 0 Falling edge on the associated port P pin sets the associated flag bit in the PIFP register.A pull-up device is connected to the associated port P pin, if enabled by the associated bit in register PERP and if the port is used as input. 1 Rising edge on the associated port P pin sets the associated flag bit in the PIFP register.A pull-down device is connected to the associated port P pin, if enabled by the associated bit in register PERP and if the port is used as input.

23.0.5.44 Port P Interrupt Enable Register (PIEP)

	7	6	5	4	3	2	1	0
R W	PIEP7	PIEP6	PIEP5	PIEP4	PIEP3	PIEP2	PIEP1	PIEP0
Reset	0	0	0	0	0	0	0	0

Figure 23-46. Port P Interrupt Enable Register (PIEP)

Read: Anytime.

Write: Anytime.

This register disables or enables on a per-pin basis the edge sensitive external interrupt associated with Port P.

Table 23-43. PIEP Field Descriptions

Field	Description
7–0 PIEP[7:0]	**Interrupt Enable Port P** 0 Interrupt is disabled (interrupt flag masked). 1 Interrupt is enabled.

23.0.5.45 Port P Interrupt Flag Register (PIFP)

	7	6	5	4	3	2	1	0
R W	PIFP7	PIFP6	PIFP5	PIFP4	PIFP3	PIFP2	PIFP1	PIFP0
Reset	0	0	0	0	0	0	0	0

Figure 23-47. Port P Interrupt Flag Register (PIFP)

Read: Anytime.

Write: Anytime.

Each flag is set by an active edge on the associated input pin. This could be a rising or a falling edge based on the state of the PPSP register. To clear this flag, write logic level “1” to the corresponding bit in the PIFP register. Writing a “0” has no effect.

Table 23-44. PIFP Field Descriptions

Field	Description
7–0 PIFP[7:0]	**Interrupt Flags Port P** 0 No active edge pending. Writing a “0” has no effect. 1 Active edge on the associated bit has occurred (an interrupt will occur if the associated enable bit is set). Writing a logic level “1” clears the associated flag.

23.0.5.46 Port H Data Register (PTH)

	7	6	5	4	3	2	1	0
R W	PTH7	PTH6	PTH5	PTH4	PTH3	PTH2	PTH1	PTH0
SCI			TXD4	RXD4				
Routed SPI	$\overline{SS2}$	SCK2	MOSI2	MISO2	$\overline{SS1}$	SCK1	MOSI1	MISO1
Reset	0	0	0	0	0	0	0	0

Figure 23-48. Port H Data Register (PTH)

Read: Anytime.

Write: Anytime.

Port H pins 7–0 are associated with the SCI4 as well as the routed SPI1 and SPI2.

These pins can be used as general purpose I/O when not used with any of the peripherals.

If the data direction bits of the associated I/O pins are set to logic level “1”, a read returns the value of the port register, otherwise the buffered pin input state is read.

The routed SPI2 function takes precedence over the SCI4 and the general purpose I/O function if the routed SPI2 module is enabled. *Refer to SPI section for details.*The routed SPI1 function takes precedence over the general purpose I/O function if the routed SPI1 is enabled. *Refer to SPI section for details.*

The SCI4 function takes precedence over the general purpose I/O function if the SCI4 is enabled

23.0.5.47 Port H Input Register (PTIH)

	7	6	5	4	3	2	1	0
R	PTIH7	PTIH6	PTIH5	PTIH4	PTIH3	PTIH2	PTIH1	PTIH0
W								
Reset[1]	—	—	—	—	—	—	—	—

= Unimplemented or Reserved

Figure 23-49. Port H Input Register (PTIH)

1. These registers are reset to zero. Two bus clock cycles after reset release the register values are updated with the associated pin values.

Read: Anytime.

Write: Never, writes to this register have no effect.

This register always reads back the buffered state of the associated pins. This can also be used to detect overload or short circuit conditions on output pins.

23.0.5.48 Port H Data Direction Register (DDRH)

	7	6	5	4	3	2	1	0
R W	DDRH7	DDRH6	DDRH5	DDRH4	DDRH3	DDRH2	DDRH1	DDRH0
Reset	0	0	0	0	0	0	0	0

Figure 23-50. Port H Data Direction Register (DDRH)

Read: Anytime.

Write: Anytime.

This register configures each port H pin as either input or output.

If the associated routed SPI module is enabled this register has no effect on the pins.

The SCI forces the I/O state to be an output for each port line associated with an enabled output (TXD4). It also forces the I/O state to be an input for each port line associated with an enabled input (RXD4). In those cases the data direction bits will not change.

If a SPI module is enabled, the SPI determines the pin direction. *Refer to SPI section for details.*

The DDRH bits revert to controlling the I/O direction of a pin when the associated peripheral modules are disabled.

Table 23-45. DDRH Field Descriptions

Field	Description
7–0 DDRH[7:0]	**Data Direction Port H** 0 Associated pin is configured as input. 1 Associated pin is configured as output. **Note:** Due to internal synchronization circuits, it can take up to 2 bus clock cycles until the correct value is read on PTH or PTIH registers, when changing the DDRH register.

23.0.5.49 Port H Reduced Drive Register (RDRH)

	7	6	5	4	3	2	1	0
R W	RDRH7	RDRH6	RDRH5	RDRH4	RDRH3	RDRH2	RDRH1	RDRH0
Reset	0	0	0	0	0	0	0	0

Figure 23-51. Port H Reduced Drive Register (RDRH)

Read: Anytime.

Write: Anytime.

This register configures the drive strength of each Port H output pin as either full or reduced. If the port is used as input this bit is ignored.

Table 23-46. RDRH Field Descriptions

Field	Description
7–0 RDRH[7:0]	**Reduced Drive Port H** 0 Full drive strength at output. 1 Associated pin drives at about 1/6 of the full drive strength.

23.0.5.50 Port H Pull Device Enable Register (PERH)

	7	6	5	4	3	2	1	0
R W	PERH7	PERH6	PERH5	PERH4	PERH3	PERH2	PERH1	PERH0
Reset	0	0	0	0	0	0	0	0

Figure 23-52. Port H Pull Device Enable Register (PERH)

Read: Anytime.

Write: Anytime.

This register configures whether a pull-up or a pull-down device is activated, if the port is used as input. This bit has no effect if the port is used as output. Out of reset no pull device is enabled.

Table 23-47. PERH Field Descriptions

Field	Description
7–0 PERH[7:0]	**Pull Device Enable Port H** 0 Pull-up or pull-down device is disabled. 1 Either a pull-up or pull-down device is enabled.

23.0.5.51 Port H Polarity Select Register (PPSH)

	7	6	5	4	3	2	1	0
R W	PPSH7	PPSH6	PPSH5	PPSH4	PPSH3	PPSH2	PPSH1	PPSH0
Reset	0	0	0	0	0	0	0	0

Figure 23-53. Port H Polarity Select Register (PPSH)

Read: Anytime.

Write: Anytime.

This register serves a dual purpose by selecting the polarity of the active interrupt edge as well as selecting a pull-up or pull-down device if enabled.

Table 23-48. PPSH Field Descriptions

Field	Description
7–0 PPSH[7:0]	**Polarity Select Port H** 0 Falling edge on the associated port H pin sets the associated flag bit in the PIFH register. A pull-up device is connected to the associated port H pin, if enabled by the associated bit in register PERH and if the port is used as input. 1 Rising edge on the associated port H pin sets the associated flag bit in the PIFH register. A pull-down device is connected to the associated port H pin, if enabled by the associated bit in register PERH and if the port is used as input.

23.0.5.52 Port H Interrupt Enable Register (PIEH)

	7	6	5	4	3	2	1	0
R W	PIEH7	PIEH6	PIEH5	PIEH4	PIEH3	PIEH2	PIEH1	PIEH0
Reset	0	0	0	0	0	0	0	0

Figure 23-54. Port H Interrupt Enable Register (PIEH)

Read: Anytime.

Write: Anytime.

This register disables or enables on a per-pin basis the edge sensitive external interrupt associated with Port H.

Table 23-49. PIEH Field Descriptions

Field	Description
7–0 PIEH[7:0]	**Interrupt Enable Port H** 0 Interrupt is disabled (interrupt flag masked). 1 Interrupt is enabled.

23.0.5.53 Port H Interrupt Flag Register (PIFH)

	7	6	5	4	3	2	1	0
R W	PIFH7	PIFH6	PIFH5	PIFH4	PIFH3	PIFH2	PIFH1	PIFH0
Reset	0	0	0	0	0	0	0	0

Figure 23-55. Port H Interrupt Flag Register (PIFH)

Read: Anytime.

Write: Anytime.

Each flag is set by an active edge on the associated input pin. This could be a rising or a falling edge based on the state of the PPSH register. To clear this flag, write logic level “1” to the corresponding bit in the PIFH register. Writing a “0” has no effect.

Table 23-50. PIFH Field Descriptions

Field	Description
7–0 PIFH[7:0]	**Interrupt Flags Port H** 0 No active edge pending. Writing a “0” has no effect. 1 Active edge on the associated bit has occurred (an interrupt will occur if the associated enable bit is set). Writing a logic level “1” clears the associated flag.

23.0.5.54 Port J Data Register (PTJ)

	7	6	5	4	3	2	1	0
R W	PTJ7	PTJ6	PTJ5	PTJ4	0	PTJ2	PTJ1	PTJ0
CAN4	TXCAN4	RXCAN4						
SCI2							TXD2	RXD2
IIC0	SCL0	SDA0						
Routed CAN0	TXCAN0	RXCAN0						
Alt. Function			$\overline{CS2}$	$\overline{CS0}$		$\overline{CS1}$		$\overline{CS3}$
Reset	0	0	0	0	0	0	0	0

= Unimplemented or Reserved

Figure 23-56. Port J Data Register (PTJ)

Read: Anytime.

Write: Anytime.

Port J pins 7–4 and 2–0 are associated with the CAN4, SCI2, IIC0, the routed CAN0 modules and chip select signals ($\overline{CS0}$, $\overline{CS1}$, $\overline{CS2}$, $\overline{CS3}$). These pins can be used as general purpose I/O when not used with any of the peripherals.

If the data direction bits of the associated I/O pins are set to logic level “1”, a read returns the value of the port register, otherwise the buffered pin input state is read.

Table 23-51. PTJ Field Descriptions

Field	Description
7–6 PJ[7:6]	The CAN4 function (TXCAN4 and RXCAN4) takes precedence over the IIC0, the routed CAN0 and the general purpose I/O function if the CAN4 module is enabled. The IIC0 function (SCL0 and SDA0) takes precedence over the routed CAN0 and the general purpose I/O function if the IIC0 is enabled. If the IIC0 module takes precedence the SDA0 and SCL0 outputs are configured as open drain outputs. *Refer to IIC section for details.* The routed CAN0 function (TXCAN0 and RXCAN0) takes precedence over the general purpose I/O function if the routed CAN0 module is enabled. *Refer to MSCAN section for details.*
2 PJ2	The chip select function ($\overline{CS1}$) takes precedence over the general purpose I/O.
1 PJ1	The SCI2 function takes precedence over the general purpose I/O function if the SCI2 module is enabled. *Refer to SCI section for details.*
0 PJ0	The chip select ($\overline{CS3}$) takes precedence over the general purpose I/O function.

23.0.5.55 Port J Input Register (PTIJ)

	7	6	5	4	3	2	1	0
R	PTIJ7	PTIJ6	PTIJ5	PTIJ4	0	PTIJ2	PTIJ1	PTIJ0
W								
Reset[1]	0	0	0	0	0	0	0	0

= Unimplemented or Reserved

Figure 23-57. Port J Input Register (PTIJ)

1. These registers are reset to zero. Two bus clock cycles after reset release the register values are updated with the associated pin values.

Read: Anytime.

Write: Never, writes to this register have no effect.

This register always reads back the buffered state of the associated pins. This can be used to detect overload or short circuit conditions on output pins.

23.0.5.56 Port J Data Direction Register (DDRJ)

	7	6	5	4	3	2	1	0
R	DDRJ7	DDRJ6	DDRJ5	DDRJ4	0	DDRJ2	DDRJ1	DDRJ0
W								
Reset	0	0	0	0	0	0	0	0

= Unimplemented or Reserved

Figure 23-58. Port J Data Direction Register (DDRJ)

Read: Anytime.

Write: Anytime.

This register configures each port J pin as either input or output.

The CAN forces the I/O state to be an output on PJ7 (TXCAN4) and an input on pin PJ6 (RXCAN4). The IIC takes control of the I/O if enabled. In these cases the data direction bits will not change.

The SCI2 forces the I/O state to be an output for each port line associated with an enabled output (TXD2). It also forces the I/O state to be an input for each port line associated with an enabled input (RXD2). In these cases the data direction bits will not change.

The DDRJ bits revert to controlling the I/O direction of a pin when the associated peripheral module is disabled.

Table 23-52. DDRJ Field Descriptions

Field	Description
7–0 DDRJ[7:4] DDRJ[2:0]	**Data Direction Port J** 0 Associated pin is configured as input. 1 Associated pin is configured as output. **Note:** Due to internal synchronization circuits, it can take up to 2 bus clock cycles until the correct value is read on PTJ or PTIJ registers, when changing the DDRJ register.

23.0.5.57 Port J Reduced Drive Register (RDRJ)

	7	6	5	4	3	2	1	0
R W	RDRJ7	RDRJ6	RDRJ5	RDRJ4	0	RDRJ2	RDRJ1	RDRJ0
Reset	0	0	0	0	0	0	0	0

= Unimplemented or Reserved

Figure 23-59. Port J Reduced Drive Register (RDRJ)

Read: Anytime.

Write: Anytime.

This register configures the drive strength of each port J output pin as either full or reduced. If the port is used as input this bit is ignored.

Table 23-53. RDRJ Field Descriptions

Field	Description
7–0 RDRJ[7:4] RDRJ[2:0]	**Reduced Drive Port J** 0 Full drive strength at output. 1 Associated pin drives at about 1/6 of the full drive strength.

23.0.5.58 Port J Pull Device Enable Register (PERJ)

	7	6	5	4	3	2	1	0
R W	PERJ7	PERJ6	PERJ5	PERJ4	0	PERJ2	PERJ1	PERJ0
Reset	1	1	1	1	0	1	1	1

= Unimplemented or Reserved

Figure 23-60. Port J Pull Device Enable Register (PERJ)

Read: Anytime.

Write: Anytime.

This register configures whether a pull-up or a pull-down device is activated, if the port is used as input or as wired-OR output. This bit has no effect if the port is used as push-pull output. Out of reset a pull-up device is enabled.

Table 23-54. PERJ Field Descriptions

Field	Description
7–0 PERJ[7:4] PERJ[2:0]	**Pull Device Enable Port J** 0 Pull-up or pull-down device is disabled. 1 Either a pull-up or pull-down device is enabled.

23.0.5.59 Port J Polarity Select Register (PPSJ)

	7	6	5	4	3	2	1	0
R W	PPSJ7	PPSJ6	PPSJ5	PPSJ4	0	PPSJ2	PPSJ1	PPSJ0
Reset	0	0	0	0	0	0	0	0

= Unimplemented or Reserved

Figure 23-61. Port J Polarity Select Register (PPSJ)

Read: Anytime.

Write: Anytime.

This register serves a dual purpose by selecting the polarity of the active interrupt edge as well as selecting a pull-up or pull-down device if enabled.

Table 23-55. PPSJ Field Descriptions

Field	Description
7–0 PPSJ[7:4] PPSJ[2:0]	**Polarity Select Port J** 0 Falling edge on the associated port J pin sets the associated flag bit in the PIFJ register. A pull-up device is connected to the associated port J pin, if enabled by the associated bit in register PERJ and if the port is used as general purpose input or as IIC port. 1 Rising edge on the associated port J pin sets the associated flag bit in the PIFJ register. A pull-down device is connected to the associated port J pin, if enabled by the associated bit in register PERJ and if the port is used as input.

23.0.5.60 Port J Interrupt Enable Register (PIEJ)

	7	6	5	4	3	2	1	0
R W	PIEJ7	PIEJ6	PIEJ5	PIEJ4	0	PIEJ2	PIEJ1	PIEJ0
Reset	0	0	0	0	0	0	0	0

= Unimplemented or Reserved

Figure 23-62. Port J Interrupt Enable Register (PIEJ)

This register disables or enables on a per-pin basis the edge sensitive external interrupt associated with Port J.

Table 23-56. PIEJ Field Descriptions

Field	Description
7–0 PIEJ[7:4] PIEJ[2:0]	**Interrupt Enable Port J** 0 Interrupt is disabled (interrupt flag masked). 1 Interrupt is enabled.

23.0.5.61 Port J Interrupt Flag Register (PIFJ)

	7	6	5	4	3	2	1	0
R W	PIFJ7	PIFJ6	PIFJ5	PIFJ4	0	PIFJ2	PIFJ1	PIFJ0
Reset	0	0	0	0	0	0	0	0

= Unimplemented or Reserved

Figure 23-63. Port J Interrupt Flag Register (PIFJ)

Read: Anytime.

Write: Anytime.

Each flag is set by an active edge on the associated input pin. This could be a rising or a falling edge based on the state of the PPSJ register. To clear this flag, write logic level “1” to the corresponding bit in the PIFJ register. Writing a “0” has no effect.

Table 23-57. PIEJ Field Descriptions

Field	Description
7–0 PIFJ[7:4] PIFJ[2:0]	**Interrupt Flags Port J** 0 No active edge pending. Writing a “0” has no effect. 1 Active edge on the associated bit has occurred (an interrupt will occur if the associated enable bit is set). Writing a logic level “1” clears the associated flag.

23.0.5.62 Port AD0 Data Register 1 (PT1AD0)

	7	6	5	4	3	2	1	0
R W	PT1AD07	PT1AD06	PT1AD05	PT1AD04	PT1AD03	PT1AD02	PT1AD01	PT1AD00
Reset	0	0	0	0	0	0	0	0

Figure 23-64. Port AD0 Data Register 1 (PT1AD0)

Read: Anytime.

Write: Anytime.

This register is associated with AD0 pins PAD[23:10]. These pins can also be used as general purpose I/O.

If the data direction bits of the associated I/O pins are set to 1, a read returns the value of the port register, otherwise the value at the pins is read.

23.0.5.63 Port AD0 Data Direction Register 1 (DDR1AD0)

	7	6	5	4	3	2	1	0
R W	DDR1AD07	DDR1AD06	DDR1AD05	DDR1AD04	DDR1AD03	DDR1AD02	DDR1AD01	DDR1AD00
Reset	0	0	0	0	0	0	0	0

Figure 23-65. Port AD0 Data Direction Register 1 (DDR1AD0)

Read: Anytime.

Write: Anytime.

This register configures pins PAD[07:00] as either input or output.

Table 23-58. DDR1AD0 Field Descriptions

Field	Description
7–0 DDR1AD0[7:0]	**Data Direction Port AD0 Register 1** 0 Associated pin is configured as input. 1 Associated pin is configured as output. **Note:** Due to internal synchronization circuits, it can take up to 2 bus clock cycles until the correct value is read on PTAD01 register, when changing the DDR1AD0 register. **Note:** To use the digital input function on port AD0 the ATD0 digital input enable register (ATD0DIEN) has to be set to logic level “1”.

23.0.5.64 Port AD0 Reduced Drive Register 1 (RDR1AD0)

	7	6	5	4	3	2	1	0
R W	RDR1AD07	RDR1AD06	RDR1AD05	RDR1AD04	RDR1AD03	RDR1AD02	RDR1AD01	RDR1AD00
Reset	0	0	0	0	0	0	0	0

Figure 23-66. Port AD0 Reduced Drive Register 1 (RDR1AD0)

Read: Anytime.

Write: Anytime.

This register configures the drive strength of each output pin PAD[07:00] as either full or reduced. If the port is used as input this bit is ignored.

Table 23-59. RDR1AD0 Field Descriptions

Field	Description
7–0 RDR1AD0[7:0]	**Reduced Drive Port AD0 Register 1** 0 Full drive strength at output. 1 Associated pin drives at about 1/6 of the full drive strength.

23.0.5.65 Port AD0 Pull Up Enable Register 1 (PER1AD0)

	7	6	5	4	3	2	1	0
R W	PER1AD07	PER1AD06	PER1AD05	PER1AD04	PER1AD03	PER1AD02	PER1AD01	PER1AD00
Reset	0	0	0	0	0	0	0	0

Figure 23-67. Port AD0 Pull Up Enable Register 1 (PER1AD0)

Read: Anytime.

Write: Anytime.

This register activates a pull-up device on the respective pin PAD[07:00] if the port is used as input. This bit has no effect if the port is used as output. Out of reset no pull device is enabled.

Table 23-60. PER1AD0 Field Descriptions

Field	Description
7–0 PER1AD0[7:0]	**Pull Device Enable Port AD0 Register 1** 0 Pull-up device is disabled. 1 Pull-up device is enabled.

23.0.5.66 Port AD1 Data Register 0 (PT0AD1)

	7	6	5	4	3	2	1	0
R W	PT0AD123	PT0AD122	PT0AD121	PT0AD120	PT0AD119	PT0AD118	PT0AD117	PT0AD116
Reset	0	0	0	0	0	0	0	0

Figure 23-68. Port AD1 Data Register 0 (PT0AD1)

Read: Anytime.

Write: Anytime.

This register is associated with AD1 pins PAD[23:16]. These pins can also be used as general purpose I/O.

If the data direction bits of the associated I/O pins are set to 1, a read returns the value of the port register, otherwise the value at the pins is read.

23.0.5.67 Port AD1 Data Register 1 (PT1AD1)

	7	6	5	4	3	2	1	0
R/W	PT1AD115	PT1AD114	PT1AD113	PT1AD112	PT1AD111	PT1AD110	PT1AD19	PT1AD18
Reset	0	0	0	0	0	0	0	0

Figure 23-69. Port AD1 Data Register 1 (PT1AD1)

Read: Anytime.

Write: Anytime.

This register is associated with AD1 pins PAD[15:8]. These pins can also be used as general purpose I/O.

If the data direction bits of the associated I/O pins are set to 1, a read returns the value of the port register, otherwise the value at the pins is read.

23.0.5.68 Port AD1 Data Direction Register 0 (DDR0AD1)

	7	6	5	4	3	2	1	0
R/W	DDR0AD123	DDR0AD122	DDR0AD121	DDR0AD120	DDR0AD119	DDR0AD118	DDR0AD117	DDR0AD116
Reset	0	0	0	0	0	0	0	0

Figure 23-70. Port AD1 Data Direction Register 0 (DDR0AD1)

Read: Anytime.

Write: Anytime.

This register configures pin PAD[23:16] as either input or output.

Table 23-61. DDR0AD1 Field Descriptions

Field	Description
7–0 DDR0AD1[23:16]	**Data Direction Port AD1 Register 0** 0 Associated pin is configured as input. 1 Associated pin is configured as output. **Note:** Due to internal synchronization circuits, it can take up to 2 bus clock cycles until the correct value is read on PTAD10 register, when changing the DDR0AD1 register. **Note:** To use the digital input function on Port AD1 the ATD1 digital input enable register (ATD1DIEN0) has to be set to logic level “1”.

23.0.5.69 Port AD1 Data Direction Register 1 (DDR1AD1)

	7	6	5	4	3	2	1	0
R W	DDR1AD115	DDR1AD114	DDR1AD113	DDR1AD112	DDR1AD111	DDR1AD110	DDR1AD19	DDR1AD18
Reset	0	0	0	0	0	0	0	0

Figure 23-71. Port AD1 Data Direction Register 1 (DDR1AD1)

Read: Anytime.

Write: Anytime.

This register configures pins PAD as either input or output.

Table 23-62. DDR1AD1 Field Descriptions

Field	Description
7–0 DDR1AD1[15:8]	**Data Direction Port AD1 Register 1** 0 Associated pin is configured as input. 1 Associated pin is configured as output. **Note:** Due to internal synchronization circuits, it can take up to 2 bus clock cycles until the correct value is read on PTAD11 register, when changing the DDR1AD1 register. **Note:** To use the digital input function on port AD1 the ATD1 digital input enable register (ATD1DIEN1) has to be set to logic level “1”.

23.0.5.70 Port AD1 Reduced Drive Register 0 (RDR0AD1)

	7	6	5	4	3	2	1	0
R W	RDR0AD123	RDR0AD122	RDR0AD121	RDR0AD120	RDR0AD119	RDR0AD118	RDR0AD117	RDR0AD116
Reset	0	0	0	0	0	0	0	0

Figure 23-72. Port AD1 Reduced Drive Register 0 (RDR0AD1)

Read: Anytime.

Write: Anytime.

This register configures the drive strength of each PAD[23:16] output pin as either full or reduced. If the port is used as input this bit is ignored.

Table 23-63. RDR0AD1 Field Descriptions

Field	Description
7–0 RDR0AD1[23:16]	**Reduced Drive Port AD1 Register 0** 0 Full drive strength at output. 1 Associated pin drives at about 1/6 of the full drive strength.

23.0.5.71 Port AD1 Reduced Drive Register 1 (RDR1AD1)

	7	6	5	4	3	2	1	0
R W	RDR1AD115	RDR1AD114	RDR1AD113	RDR1AD112	RDR1AD111	RDR1AD110	RDR1AD19	RDR1AD18
Reset	0	0	0	0	0	0	0	0

Figure 23-73. Port AD1 Reduced Drive Register 1 (RDR1AD1)

Read: Anytime.

Write: Anytime.

This register configures the drive strength of each PAD[15:8] output pin as either full or reduced. If the port is used as input this bit is ignored.

Table 23-64. RDR1AD1 Field Descriptions

Field	Description
7–0 RDR1AD1[15:8]	**Reduced Drive Port AD1 Register 1** 0 Full drive strength at output. 1 Associated pin drives at about 1/6 of the full drive strength.

23.0.5.72 Port AD1 Pull Up Enable Register 0 (PER0AD1)

	7	6	5	4	3	2	1	0
R W	PER0AD123	PER0AD122	PER0AD121	PER0AD120	PER0AD119	PER0AD118	PER0AD117	PER0AD116
Reset	0	0	0	0	0	0	0	0

Figure 23-74. Port AD1 Pull Up Enable Register 0 (PER0AD1)

Read: Anytime.

Write: Anytime.

This register activates a pull-up device on the respective PAD[23:16] pin if the port is used as input. This bit has no effect if the port is used as output. Out of reset no pull-up device is enabled.

Table 23-65. PER0AD1 Field Descriptions

Field	Description
7–0 PER0AD1[23:16]	**Pull Device Enable Port AD1 Register 0** 0 Pull-up device is disabled. 1 Pull-up device is enabled.

23.0.5.73 Port AD1 Pull Up Enable Register 1 (PER1AD1)

	7	6	5	4	3	2	1	0
R W	PER1AD115	PER1AD114	PER1AD113	PER1AD112	PER1AD111	PER1AD110	PER1AD19	PER1AD18
Reset	0	0	0	0	0	0	0	0

Figure 23-75. Port AD1 Pull Up Enable Register 1 (PER1AD1)

Read: Anytime.

Write: Anytime.

This register activates a pull-up device on the respective PAD[15:8] pin if the port is used as input. This bit has no effect if the port is used as output. Out of reset no pull-up device is enabled.

Table 23-66. PER1AD1 Field Descriptions

Field	Description
7–0 PER1AD1[15:8]	**Pull Device Enable Port AD1 Register 1** 0 Pull-up device is disabled. 1 Pull-up device is enabled.

Functional Description

Each pin except PE0, PE1, and BKGD can act as general purpose I/O. In addition each pin can act as an output from the external bus interface module or a peripheral module or an input to the external bus interface module or a peripheral module.

A set of configuration registers is common to all ports with exceptions in the expanded bus interface and ATD ports (Table 23-67). All registers can be written at any time; however a specific configuration might not become active.

Example: Selecting a pull-up device

This device does not become active while the port is used as a push-pull output.

Table 23-67. Register Availability per Port[1]

Port	Data	Data Direction	Input	Reduced Drive	Pull Enable	Polarity Select	Wired-OR Mode	Interrupt Enable	Interrupt Flag
A	yes	yes	—	yes	yes	—	—	—	—
B	yes	yes	—			—	—	—	—
C	yes	yes	—			—	—	—	—
D	yes	yes	—			—	—	—	—
E	yes	yes	—			—	—	—	—
K	yes	yes	—			—	—	—	—
T	yes	yes	yes	yes	yes	—	—	—	—
S	yes	yes	yes	yes	yes	yes	yes	—	—
M	yes	yes	yes	yes	yes	yes	yes	—	—

Table 23-67. Register Availability per Port[1]

Port	Data	Data Direction	Input	Reduced Drive	Pull Enable	Polarity Select	Wired-OR Mode	Interrupt Enable	Interrupt Flag
P	yes	yes	yes	yes	yes	yes	—	yes	yes
H	yes	yes	yes	yes	yes	yes	—	yes	yes
J	yes	yes	yes	yes	yes	yes	—	yes	yes
AD0	yes	yes	—	yes	yes	—	—	—	—
AD1	yes	yes	—	yes	yes	—	—	—	—

1. Each cell represents one register with individual configuration bits

23.0.6 Registers

23.0.6.1 Data Register

This register holds the value driven out to the pin if the pin is used as a general purpose I/O.

Writing to this register has only an effect on the pin if the pin is used as general purpose output. When reading this address, the buffered state of the pin is returned if the associated data direction register bit is set to “0”.

If the data direction register bits are set to logic level “1”, the contents of the data register is returned. This is independent of any other configuration (Figure 23-76).

23.0.6.2 Input Register

This is a read-only register and always returns the buffered state of the pin (Figure 23-76).

23.0.6.3 Data Direction Register

This register defines whether the pin is used as an input or an output.

If a peripheral module controls the pin the contents of the data direction register is ignored (Figure 23-76).

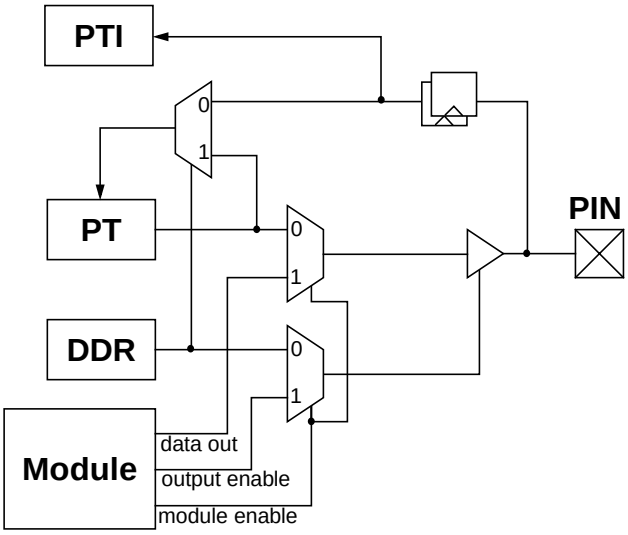

Figure 23-76. Illustration of I/O Pin Functionality

23.0.6.4 Reduced Drive Register

If the pin is used as an output this register allows the configuration of the drive strength.

23.0.6.5 Pull Device Enable Register

This register turns on a pull-up or pull-down device. It becomes active only if the pin is used as an input or as a wired-OR output.

23.0.6.6 Polarity Select Register

This register selects either a pull-up or pull-down device if enabled. It becomes active only if the pin is used as an input. A pull-up device can be activated if the pin is used as a wired-OR output. If the pin is used as an interrupt input this register selects the active interrupt edge.

23.0.6.7 Wired-OR Mode Register

If the pin is used as an output this register turns off the active high drive. This allows wired-OR type connections of outputs.

23.0.6.8 Interrupt Enable Register

If the pin is used as an interrupt input this register serves as a mask to the interrupt flag to enable/disable the interrupt.

23.0.6.9 Interrupt Flag Register

If the pin is used as an interrupt input this register holds the interrupt flag after a valid pin event.

23.0.6.10 Module Routing Register

This register supports the re-routing of the CAN0, CAN4, SPI0, SPI1, and SPI2 pins to alternative ports. This allows a software re-configuration of the pinouts of the different package options with respect to above peripherals.

NOTE

The purpose of the module routing register is to provide maximum flexibility for derivatives with a lower number of MSCAN and SPI modules.

Table 23-68. Module Implementations on Derivatives

Number of Modules	MSCAN Modules					SPI Modules		
	CAN0	CAN1	CAN2	CAN3	CAN4	SPI0	SPI1	SPI2
5	yes	yes	yes	yes	yes	—	—	—
4	yes	yes	yes	—	yes	—	—	—
3	yes	yes	—	—	yes	yes	yes	yes
2	yes	—	—	—	yes	yes	yes	—
1	yes	—	—	—	—	yes	—	—

23.0.7 Ports

23.0.7.1 BKGD Pin

The BKGD pin is associated with the S12X_BDM and S12X_EBI modules. During reset, the BKGD pin is used as MODC input.

23.0.7.2 Port A and B

Port A pins PA[7:0] and Port B pins PB[7:0] can be used for either general-purpose I/O, or, in 144-pin packages, also with the external bus interface. In this case port A and port B are associated with the external address bus outputs ADDR15–ADDR8 and ADDR7–ADDR0, respectively. PB0 is the ADDR0 or $\overline{\text{UDS}}$ output.

23.0.7.3 Port C and D

Port C pins PC[7:0] and port D pins PD[7:0] can be used for either general-purpose I/O, or, in 144-pin packages, also with the external bus interface. In this case port C and port D are associated with the external data bus inputs/outputs DATA15–DATA8 and DATA7–DATA0, respectively.

These pins are configured for reduced input threshold in certain operating modes (refer to S12X_EBI section).

NOTE

Port C and D are neither available in 112-pin nor in 80-pin packages.

23.0.7.4 Port E

Port E is associated with the external bus control outputs R/$\overline{W}$, $\overline{LSTRB}$, $\overline{LDS}$ and $\overline{RE}$, the free-running clock outputs ECLK and ECLK2X, as well as with the $\overline{TAGHI}$, $\overline{TAGLO}$, MODA and MODB and interrupt inputs $\overline{IRQ}$ and $\overline{XIRQ}$.

Port E pins PE[7:2] can be used for either general-purpose I/O or with the alternative functions.

Port E pin PE[7] an be used for either general-purpose I/O or as the free-running clock ECLKX2 output running at the core clock rate. The clock output is always enabled in emulation modes.

Port E pin PE[4] an be used for either general-purpose I/O or as the free-running clock ECLK output running at the bus clock rate or at the programmed divided clock rate. The clock output is always enabled in emulation modes.

Port E pin PE[1] can be used for either general-purpose input or as the level- or falling edge-sensitive $\overline{IRQ}$ interrupt input. $\overline{IRQ}$ will be enabled by setting the IRQEN configuration bit (Section 23.0.5.14, “IRQ Control Register (IRQCR)”) and clearing the I-bit in the CPU’s condition code register. It is inhibited at reset so this pin is initially configured as a simple input with a pull-up.

Port E pin PE[0] can be used for either general-purpose input or as the level-sensitive $\overline{XIRQ}$ interrupt input. $\overline{XIRQ}$ can be enabled by clearing the X-bit in the CPU’s condition code register. It is inhibited at reset so this pin is initially configured as a high-impedance input with a pull-up.

Port E pins PE[5] and PE[6] are configured for reduced input threshold in certain modes (refer to S12X_EBI section).

23.0.7.5 Port K

Port K pins PK[7:0] can be used for either general-purpose I/O, or, in 144-pin packages, also with the external bus interface. In this case port K pins PK[6:0] are associated with the external address bus outputs ADDR22–ADDR16 and PK7 is associated to the $\overline{EWAIT}$ input.

Port K pin PE[7] is configured for reduced input threshold in certain modes (refer to S12X_EBI section).

NOTE

Port K is not available in 80-pin packages. PK[6] is not available in 112-pin packages.

23.0.7.6 Port T

This port is associated with the ECT module. Port T pins PT[7:0] can be used for either general-purpose I/O, or with the channels of the enhanced capture timer.

23.0.7.7 Port S

This port is associated with SCI0, SCI1 and SPI0. Port S pins PS[7:0] can be used either for general-purpose I/O, or with the SCI and SPI subsystems.

The SPI0 pins can be re-routed. *Refer to Section 23.0.5.37, “Module Routing Register (MODRR)”.*

NOTE

PS[7:4] are not available in 80-pin packages.

23.0.7.8 Port M

This port is associated with the CAN40 and SPI0. Port M pins PM[7:0] can be used for either general purpose I/O, or with the CAN, SCI and SPI subsystems.

The CAN0, CAN4 and SPI0 pins can be re-routed. *Refer to Section 23.0.5.37, "Module Routing Register (MODRR)"*.

NOTE

PM[7:6] are not available in 80-pin packages.

23.0.7.9 Port P

This port is associated with the PWM, SPI1 and SPI2. Port P pins PP[7:0] can be used for either general purpose I/O, or with the PWM and SPI subsystems.

The pins are shared between the PWM channels and the SPI1 and SPI2. If the PWM is enabled the pins become PWM output channels with the exception of pin 7 which can be PWM input or output. If SPI1 or SPI2 are enabled and PWM is disabled, the respective pin configuration is determined by status bits in the SPI.

The SPI1 and SPI2 pins can be re-routed. *Refer to Section 23.0.5.37, "Module Routing Register (MODRR)"*.

Port P offers 8 I/O pins with edge triggered interrupt capability in wired-OR fashion (Section 23.0.8, "Pin Interrupts").

NOTE

PP[6] is not available in 80-pin packages.

23.0.7.10 Port H

This port is associated with the SPI1, SPI2, SCI4. Port H pins PH[7:0] can be used for either general purpose I/O, or with the SPI and SCI subsystems. Port H pins can be used with the routed SPI1 and SPI2. *Refer to Section 23.0.5.37, "Module Routing Register (MODRR)"*.

Port H offers 8 I/O pins with edge triggered interrupt capability (Section 23.0.8, "Pin Interrupts").

NOTE

Port H is not available in 80-pin packages.

23.0.7.11 Port J

This port is associated with the chip selects $\overline{CS0}$, $\overline{CS1}$, $\overline{CS2}$ and $\overline{CS3}$ as well as with CAN4, CAN0, IIC1, IIC0, and SCI2. Port J pins PJ[7:4] and PJ[2:0] can be used for either general purpose I/O, or with the CAN, IIC, or SCI subsystems. If IIC takes precedence the associated pins become IIC

open-drain output pins. The CAN4 pins can be re-routed. *Refer to Section 23.0.5.37, "Module Routing Register (MODRR)"*.

Port J pins can be used with the routed CAN0 modules. *Refer to Section 23.0.5.37, "Module Routing Register (MODRR)"*.

Port J offers 7 I/O pins with edge triggered interrupt capability (Section 23.0.8, "Pin Interrupts").

NOTE

PJ[5,4,2] are not available in 112-pin packages. PJ[5,4,2,1,0] are not available in 80-pin packages.

23.0.7.12 Port AD0

This port is associated with the ATD0. Port AD0 pins PAD07–PAD00 can be used for either general purpose I/O, or with the ATD0 subsystem.

23.0.7.13 Port AD1

This port is associated with the ATD1. Port AD1 pins PAD23–PAD8 can be used for either general purpose I/O, or with the ATD1 subsystem.

NOTE

PAD[23:16] are not available in 112-pin packages. PAD[23:8] are not available in 80-pin packages.

23.0.8 Pin Interrupts

Ports P, H and J offer pin interrupt capability. The interrupt enable as well as the sensitivity to rising or falling edges can be individually configured on per-pin basis. All bits/pins in a port share the same interrupt vector. Interrupts can be used with the pins configured as inputs or outputs.

An interrupt is generated when a bit in the port interrupt flag register and its corresponding port interrupt enable bit are both set. The pin interrupt feature is also capable to wake up the CPU when it is in STOP or WAIT mode.

A digital filter on each pin prevents pulses (Figure 23-78) shorter than a specified time from generating an interrupt. The minimum time varies over process conditions, temperature and voltage (Figure 23-77 and Table 23-69).

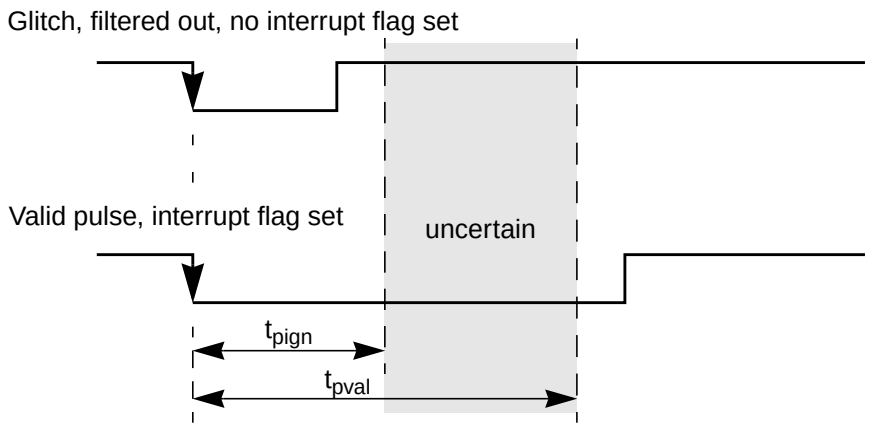

Figure 23-77. Interrupt Glitch Filter on Port P, H, and J (PPS = 0)

Table 23-69. Pulse Detection Criteria

Pulse	Mode		
	$\overline{STOP}$	Unit	STOP[1]
Ignored	$t_{pulse} \leq 3$	Bus clocks	$t_{pulse} \leq t_{pign}$
Uncertain	$3 < t_{pulse} < 4$	Bus clocks	$t_{pign} < t_{pulse} < t_{pval}$
Valid	$t_{pulse} \geq 4$	Bus clocks	$t_{pulse} \geq t_{pval}$

1. These values include the spread of the oscillator frequency over temperature, voltage and process.

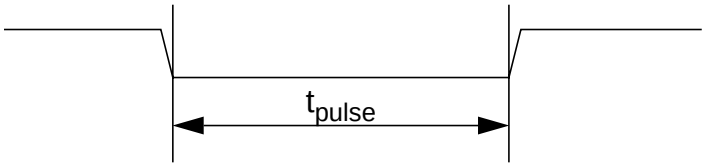

Figure 23-78. Pulse Illustration

A valid edge on an input is detected if 4 consecutive samples of a passive level are followed by 4 consecutive samples of an active level directly or indirectly.

The filters are continuously clocked by the bus clock in run and wait mode. In stop mode, the clock is generated by an RC-oscillator in the port integration module. To maximize current saving the RC oscillator runs only if the following condition is true on any pin individually:

Sample count <= 4 and interrupt enabled (PIE = 1) and interrupt flag not set (PIF = 0).

23.0.9 Expanded Bus Pin Functions

All peripheral ports T, S, M, P, H, J, AD0, and AD1 start up as general purpose inputs after reset.

Depending on the external mode pin condition, the external bus interface related ports A, B, C, D, E, and K start up as general purpose inputs on reset or are configured for their alternate functions.

Table 23-70 lists the pin functions in relationship with the different operating modes. If two entries per pin are displayed, a ‘mux’ indicates time-multiplexing between the two functions and an ‘or’ means that a configuration bit exists which can be altered after reset to select the respective function (displayed in *italics*). *Refer to S12X_EBI section for details.*

Table 23-70. Expanded Bus Pin Functions versus Operating Modes

Pin	Single-Chip Modes		Expanded Modes			
	Normal Single-Chip	Special Single-Chip	Normal Expanded	Emulation Single-Chip	Emulation Expanded	Special Test
PK7	GPIO	GPIO	GPIO *or* $\overline{EWAIT}$	GPIO	GPIO *or* $\overline{EWAIT}$	GPIO
PK[6:4]	GPIO	GPIO	ADDR[22:20] *or* *GPIO*	ADDR[22:20] mux ACC[2:0]	ADDR[22:20] mux ACC[2:0]	ADDR[22:20]
PK[3:0]	GPIO	GPIO	ADDR[19:16] *or* *GPIO*	ADDR[19:16] mux IQSTAT[3:0]	ADDR[19:16] mux IQSTAT[3:0]	ADDR[19:16]
PA[7:0]	GPIO	GPIO	ADDR[15:8] *or* *GPIO*	ADDR[15:8] mux IVD[15:8]	ADDR[15:8] mux IVD[15:8]	ADDR[15:8]
PB[7:1]	GPIO	GPIO	ADDR[7:1] *or* *GPIO*	ADDR[7:1] mux IVD[7:1]	ADDR[7:1] mux IVD[7:1]	ADDR[7:1]
PB0	GPIO	GPIO	UDS *or* *GPIO*	ADDR0 mux IVD0	ADDR0 mux IVD0	ADDR0
PC[7:0]	GPIO	GPIO	DATA[15:8] *or* *GPIO*	DATA[15:8]	DATA[15:8]	DATA[15:8] *or* *GPIO*
PD[7:0]	GPIO	GPIO	DATA[7:0]	DATA[7:0]	DATA[7:0]	DATA[7:0]
PE7	GPIO *or* *ECLKX2*	GPIO *or* *ECLKX2*	GPIO *or* *ECLKX2*	ECLKX2	ECLKX2	GPIO *or* *ECLKX2*
PE6	GPIO	GPIO	GPIO	TAGHI	TAGHI	GPIO
PE5	GPIO	GPIO	RE	TAGLO	TAGLO	GPIO
PE4	GPIO *or* *ECLK*	ECLK *or* *GPIO*	ECLK *or* *GPIO*	ECLK	ECLK	ECLK *or* *GPIO*
PE3	GPIO	GPIO	$\overline{LDS}$ *or* *GPIO*	$\overline{LSTRB}$	$\overline{LSTRB}$	$\overline{LSTRB}$
PE2	GPIO	GPIO	$\overline{WE}$	R/$\overline{W}$	R/$\overline{W}$	R/$\overline{W}$
PJ5	GPIO	GPIO	GPIO *or* $\overline{CS2}$	GPIO	GPIO *or* $\overline{CS2}$	GPIO *or* $\overline{CS2}$
PJ4	GPIO	GPIO	GPIO *or* $\overline{CS0}$ (1)	GPIO	GPIO *or* $\overline{CS0}$ (1)	GPIO *or* $\overline{CS0}$

Table 23-70. Expanded Bus Pin Functions versus Operating Modes (continued)

Pin	Single-Chip Modes		Expanded Modes			
	Normal Single-Chip	Special Single-Chip	Normal Expanded	Emulation Single-Chip	Emulation Expanded	Special Test
PJ2	GPIO	GPIO	GPIO *or* $\overline{CS1}$	GPIO	GPIO *or* $\overline{CS1}$	GPIO *or* $\overline{CS1}$
PJ0	GPIO	GPIO	GPIO *or* $\overline{CS3}$	GPIO	GPIO *or* $\overline{CS3}$	GPIO *or* $\overline{CS3}$

1. Depending on ROMON bit. *Refer to Device Guide, S12X_EBI section and S12X_MMC section for details.*

23.0.10 Low-Power Options

23.0.10.1 Run Mode

No low-power options exist for this module in run mode.

23.0.10.2 Wait Mode

No low-power options exist for this module in wait mode.

23.0.10.3 Stop Mode

All clocks are stopped. There are asynchronous paths to generate interrupts from stop on port P, H, and J.

Initialization and Application Information

- It is not recommended to write PORTx and DDRx in a word access. When changing the register pins from inputs to outputs, the data may have extra transitions during the write access. Initialize the port data register before enabling the outputs.
- Power consumption will increase the more the voltages on general purpose input pins deviate from the supply voltages towards mid-range because the digital input buffers operate in the linear region.

Chapter 24
DG128 Port Integration Module (S12XDG128PIMV2)

Introduction

The S12XD family port integration module (below referred to as PIM) establishes the interface between the peripheral modules including the non-multiplexed external bus interface module (S12X_EBI) and the I/O pins for all ports. It controls the electrical pin properties as well as the signal prioritization and multiplexing on shared pins.

This document covers the description of:

- Port A, B
- Port E associated with the IRQ, XIRQ interrupt inputs
- Port K
- Port T connected to the Enhanced Capture Timer (ECT) module
- Port S associated with 2 SCI and 1 SPI modules
- Port M associated with 2 MSCAN modules and 1 SCI module
- Port P connected to the PWM and 1 SPI module — inputs can be used as an external interrupt source
- Port H associated with 2 SCI modules — inputs can be used as an external interrupt source
- Port J associated with 1 MSCAN, 1 SCI, and 1 IIC module — inputs can be used as an external interrupt source
- Port AD1 associated with one 16-channel ATD module

Most I/O pins can be configured by register bits to select data direction and drive strength, to enable and select pull-up or pull-down devices. Interrupts can be enabled on specific pins resulting in status flags.

The I/O's of 2 MSCAN and 2 SPI modules can be routed from their default location to alternative port pins.

NOTE

The implementation of the PIM is device dependent. Therefore some functions are not available on certain derivatives or80-pin package options.

24.0.1 Features

A full-featured PIM module includes these distinctive registers:

- Data and data direction registers for Ports A, B, E, K, T, S, M, P, H, J, and AD1 when used as general-purpose I/O
- Control registers to enable/disable pull-device and select pull-ups/pull-downs on Ports T, S, M, P, H, and J on per-pin basis
- Control registers to enable/disable pull-up devices on Port AD1 on per-pin basis
- Single control register to enable/disable pull-ups on Ports A, B, E, and K on per-port basis and on BKGD pin
- Control registers to enable/disable reduced output drive on Ports T, S, M, P, H, J, and AD1 on per-pin basis
- Single control register to enable/disable reduced output drive on Ports A, B, E, and K on per-port basis
- Control registers to enable/disable open-drain (wired-OR) mode on Ports S and M
- Control registers to enable/disable pin interrupts on Ports P, H, and J
- Interrupt flag register for pin interrupts on Ports P, H, and J
- Control register to configure $\overline{\text{IRQ}}$ pin operation
- Free-running clock outputs

A standard port pin has the following minimum features:

- Input/output selection
- 5V output drive with two selectable drive strengths
- 5V digital and analog input
- Input with selectable pull-up or pull-down device

Optional features:

- Open drain for wired-OR connections
- Interrupt inputs with glitch filtering
- Reduced input threshold to support low voltage applications

24.0.2 Block Diagram

Figure 24-1 is a block diagram of the PIM.

- Signals shown in **Bold** are not available in 80-pin packages.
- Shaded labels denote alternative module routing ports.

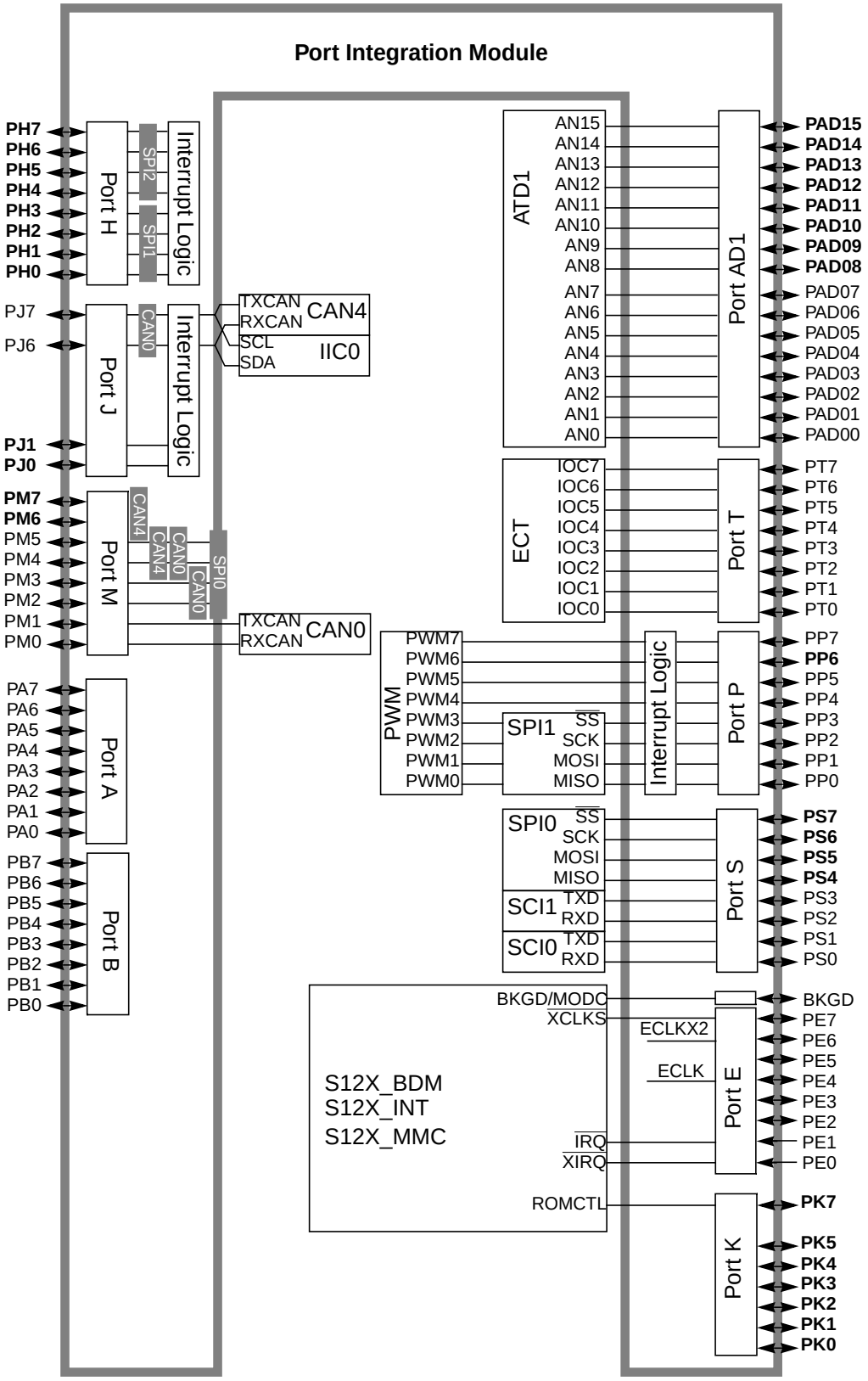

Figure 24-1. PIM_9XDG128 Block Diagram

External Signal Description

This section lists and describes the signals that do connect off-chip.

24.0.3 Signal Properties

Table 24-1 shows all the pins and their functions that are controlled by the PIM. *Refer to Section , "Functional Description" for the availability of the individual pins in the different package options.*

NOTE

If there is more than one function associated with a pin, the priority is indicated by the position in the table from top (highest priority) to bottom (lowest priority).

Table 24-1. Pin Functions and Priorities (Sheet 1 of 5)

Port	Pin Name	Pin Function and Priority	I/O	Description	Pin Function after Reset
—	BKGD	MODC[1]	I	MODC input during $\overline{\text{RESET}}$	BKGD
		BKGD	I/O	S12X_BDM communication pin	
A	PA[7:0]	GPIO	I/O	General-purpose I/O	GPIO
B	PB[7:0]	GPIO	I/O	General-purpose I/O	GPIO
E	PE[7]	$\overline{\text{XCLKS}}$[1]	I	External clock selection input during $\overline{\text{RESET}}$	
		ECLKX2	I	Free-running clock output at Core Clock rate (ECLK x 2)	
		GPIO	I/O	General-purpose I/O	
	PE[6:5]	GPIO	I/O	General-purpose I/O	
	PE[4]	ECLK	O	Free-running clock output at the Bus Clock rate or programmable divided in normal modes	
		GPIO	I/O	General-purpose I/O	
	PE[3:2]	GPIO	I/O	General-purpose I/O	
	PE[1]	$\overline{\text{IRQ}}$	I	Maskable level- or falling edge-sensitive interrupt input	
		GPIO	I/O	General-purpose I/O	
	PE[0]	$\overline{\text{XIRQ}}$	I	Non-maskable level-sensitive interrupt input	
		GPIO	I/O	General-purpose I/O	
K	PK[7]	GPIO	I/O	General-purpose I/O	GPIO
	PK[5:0]	GPIO	I/O	General-purpose I/O	
T	PT[7:0]	IOC[7:0]	I/O	Enhanced Capture Timer Channels 7–0 input/output	GPIO
		GPIO	I/O	General-purpose I/O	

Table 24-1. Pin Functions and Priorities (Sheet 2 of 5)

Port	Pin Name	Pin Function and Priority	I/O	Description	Pin Function after Reset
S	PS7	$\overline{SS0}$	I/O	Serial Peripheral Interface 0 slave select output in master mode, input in slave mode or master mode.	GPIO
		GPIO	I/O	General-purpose I/O	
	PS6	SCK0	I/O	Serial Peripheral Interface 0 serial clock pin	
		GPIO	I/O	General-purpose I/O	
	PS5	MOSI0	I/O	Serial Peripheral Interface 0 master out/slave in pin	
		GPIO	I/O	General-purpose I/O	
	PS4	MISO0	I/O	Serial Peripheral Interface 0 master in/slave out pin	
		GPIO	I/O	General-purpose I/O	
	PS3	TXD1	O	Serial Communication Interface 1 transmit pin	
		GPIO	I/O	General-purpose I/O	
	PS2	RXD1	I	Serial Communication Interface 1 receive pin	
		GPIO	I/O	General-purpose I/O	
	PS1	TXD0	O	Serial Communication Interface 0 transmit pin	
		GPIO	I/O	General-purpose I/O	
	PS0	RXD0	I	Serial Communication Interface 0 receive pin	
		GPIO	I/O	General-purpose I/O	

Table 24-1. Pin Functions and Priorities (Sheet 3 of 5)

Port	Pin Name	Pin Function and Priority	I/O	Description	Pin Function after Reset
M	PM7	TXCAN4	O	MSCAN4 transmit pin	GPIO
		GPIO	I/O	General-purpose I/O	
	PM6	RXCAN4	I	MSCAN4 receive pin	
		GPIO	I/O	General-purpose I/O	
	PM5	TXCAN0	O	MSCAN0 transmit pin	
		TXCAN4	O	MSCAN4 transmit pin	
		SCK0	I/O	Serial Peripheral Interface 0 serial clock pin *If CAN0 is routed to PM[3:2] the SPI0 can still be used in bidirectional master mode.*	
		GPIO	I/O	General-purpose I/O	
	PM4	RXCAN0	I	MSCAN0 receive pin	
		RXCAN4	I	MSCAN4 receive pin	
		MOSI0	I/O	Serial Peripheral Interface 0 master out/slave in pin *If CAN0 is routed to PM[3:2] the SPI0 can still be used in bidirectional master mode.*	
		GPIO	I/O	General-purpose I/O	
	PM3	TXCAN0	O	MSCAN0 transmit pin	
		$\overline{SS0}$	I/O	Serial Peripheral Interface 0 slave select output in master mode, input for slave mode or master mode.	
		GPIO	I/O	General-purpose I/O	
	PM2	RXCAN0	I	MSCAN0 receive pin	
		MISO0	I/O	Serial Peripheral Interface 0 master in/slave out pin	
		GPIO	I/O	General-purpose I/O	
	PM1	TXCAN0	O	MSCAN0 transmit pin	
		GPIO	I/O	General-purpose I/O	
	PM0	RXCAN0	I	MSCAN0 receive pin	
		GPIO	I/O	General-purpose I/O	

Table 24-1. Pin Functions and Priorities (Sheet 4 of 5)

Port	Pin Name	Pin Function and Priority	I/O	Description	Pin Function after Reset
P	PP7	PWM7	I/O	Pulse Width Modulator input/output channel 7	GPIO
		GPIO/KWP7	I/O	General-purpose I/O with interrupt	
	PP6	PWM6	O	Pulse Width Modulator output channel 6	
		GPIO/KWP6	I/O	General-purpose I/O with interrupt	
	PP5	PWM5	O	Pulse Width Modulator output channel 5	
		GPIO/KWP5	I/O	General-purpose I/O with interrupt	
	PP4	PWM4	O	Pulse Width Modulator output channel 4	
		GPIO/KWP4	I/O	General-purpose I/O with interrupt	
	PP3	PWM3	O	Pulse Width Modulator output channel 3	
		$\overline{SS1}$	I/O	Serial Peripheral Interface 1 slave select output in master mode, input for slave mode or master mode.	
		GPIO/KWP3	I/O	General-purpose I/O with interrupt	
	PP2	PWM2	O	Pulse Width Modulator output channel 2	
		SCK1	I/O	Serial Peripheral Interface 1 serial clock pin	
		GPIO/KWP2	I/O	General-purpose I/O with interrupt	
	PP1	PWM1	O	Pulse Width Modulator output channel 1	
		MOSI1	I/O	Serial Peripheral Interface 1 master out/slave in pin	
		GPIO/KWP1	I/O	General-purpose I/O with interrupt	
	PP0	PWM0	O	Pulse Width Modulator output channel 0	
		MISO1	I/O	Serial Peripheral Interface 1 master in/slave out pin	
		GPIO/KWP0	I/O	General-purpose I/O with interrupt	

Table 24-1. Pin Functions and Priorities (Sheet 5 of 5)

Port	Pin Name	Pin Function and Priority	I/O	Description	Pin Function after Reset
H	PH7	$\overline{SS2}$	I/O	Serial Peripheral Interface 2 slave select output in master mode, input for slave mode or master mode	GPIO
		TXD5	O	Serial Communication Interface 5 transmit pin	
		GPIO/KWH7	I/O	General-purpose I/O with interrupt	
	PH6	SCK2	I/O	Serial Peripheral Interface 2 serial clock pin	
		RXD5	I	Serial Communication Interface 5 receive pin	
		GPIO/KWH6	I/O	General-purpose I/O with interrupt	
	PH5	MOSI2	I/O	Serial Peripheral Interface 2 master out/slave in pin	
		TXD4	O	Serial Communication Interface 4 transmit pin	
		GPIO/KWH5	I/O	General-purpose I/O with interrupt	
	PH4	MISO2	I/O	Serial Peripheral Interface 2 master in/slave out pin	
		RXD4	I	Serial Communication Interface 4 receive pin	
		GPIO/KWH4	I/O	General-purpose I/O with interrupt	
	PH3	$\overline{SS1}$	I/O	Serial Peripheral Interface 1 slave select output in master mode, input for slave mode or master mode.	
		GPIO/KWH3	I/O	General-purpose I/O with interrupt	
	PH2	SCK1	I/O	Serial Peripheral Interface 1 serial clock pin	
		GPIO/KWH2	I/O	General-purpose I/O with interrupt	
	PH1	MOSI1	I/O	Serial Peripheral Interface 1 master out/slave in pin	
		GPIO/KWH1	I/O	General-purpose I/O with interrupt	
	PH0	MISO1	I/O	Serial Peripheral Interface 1 master in/slave out pin	
		GPIO/KWH0	I/O	General-purpose I/O with interrupt	
J	PJ7	TXCAN4	O	MSCAN4 transmit pin	GPIO
		SCL0	O	Inter Integrated Circuit 0 serial clock line	
		TXCAN0	O	MSCAN0 transmit pin	
		GPIO/KWJ7	I/O	General-purpose I/O with interrupt	
	PJ6	RXCAN4	I	MSCAN4 receive pin	
		SDA0	I/O	Inter Integrated Circuit 0 serial data line	
		RXCAN0	I	MSCAN0 receive pin	
		GPIO/KWJ6	I/O	General-purpose I/O with interrupt	
	PJ1	GPIO/KWJ1	I/O	General-purpose I/O with interrupt	
	PJ0	GPIO/KWJ0	I/O	General-purpose I/O with interrupt	
AD1	PAD[15:00]	GPIO	I/O	General-purpose I/O	GPIO
		AN[15:0]	I	ATD1 analog inputs	

1. Function active when $\overline{RESET}$ asserted.

Memory Map and Register Definition

This section provides a detailed description of all PIM registers.

24.0.4 Module Memory Map

Table 24-2 shows the register map of the port integration module.

Table 24-2. PIM Memory Map (Sheet 1 of 3)

Address	Use	Access
0x0000	Port A Data Register (PORTA)	Read / Write
0x0001	Port B Data Register (PORTB)	Read / Write
0x0002	Port A Data Direction Register (DDRA)	Read / Write
0x0003	Port B Data Direction Register (DDRB)	Read / Write
0x0004 : 0x0007	PIM Reserved	—
0x0008	Port E Data Register (PORTE)	Read / Write[1]
0x0009	Port E Data Direction Register (DDRE)	Read / Write[1]
0x000A : 0x000B	Non-PIM Address Range	—
0x000C	Pull-up Up Control Register (PUCR)	Read / Write[1]
0x000D	Reduced Drive Register (RDRIV)	Read / Write[1]
0x000E : 0x001B	Non-PIM Address Range	—
0x001C	ECLK Control Register (ECLKCTL)	Read / Write[1]
0x001D	PIM Reserved	—
0x001E	IRQ Control Register (IRQCR)	Read / Write[1]
0x001F	PIM Reserved	—
0x0020 : 0x0031	Non-PIM Address Range	—
0x0032	Port K Data Register (PORTK)	Read / Write
0x0033	Port K Data Direction Register (DDRK)	Read / Write
0x0034 : 0x023F	Non-PIM Address Range	—
0x0240	Port T Data Register (PTT)	Read / Write
0x0241	Port T Input Register (PTIT)	Read
0x0242	Port T Data Direction Register (DDRT)	Read / Write
0x0243	Port T Reduced Drive Register (RDRT)	Read / Write

Table 24-2. PIM Memory Map (Sheet 2 of 3)

Address	Use	Access
0x0244	Port T Pull Device Enable Register (PERT)	Read / Write
0x0245	Port T Polarity Select Register (PPST)	Read / Write
0x0246	PIM Reserved	—
0x0247	PIM Reserved	—
0x0248	Port S Data Register (PTS)	Read / Write
0x0249	Port S Input Register (PTIS)	Read
0x024A	Port S Data Direction Register (DDRS)	Read / Write
0x024B	Port S Reduced Drive Register (RDRS)	Read / Write
0x024C	Port S Pull Device Enable Register (PERS)	Read / Write
0x024D	Port S Polarity Select Register (PPSS)	Read / Write
0x024E	Port S Wired-OR Mode Register (WOMS)	Read / Write
0x024F	PIM Reserved	—
0x0250	Port M Data Register (PTM)	Read / Write
0x0251	Port M Input Register (PTIM)	Read
0x0252	Port M Data Direction Register (DDRM)	Read / Write
0x0253	Port M Reduced Drive Register (RDRM)	Read / Write
0x0254	Port M Pull Device Enable Register (PERM)	Read / Write
0x0255	Port M Polarity Select Register (PPSM)	Read / Write
0x0256	Port M Wired-OR Mode Register (WOMM)	Read / Write
0x0257	Module Routing Register (MODRR)	Read / Write
0x0258	Port P Data Register (PTP)	Read / Write
0x0259	Port P Input Register (PTIP)	Read
0x025A	Port P Data Direction Register (DDRP)	Read / Write
0x025B	Port P Reduced Drive Register (RDRP)	Read / Write
0x025C	Port P Pull Device Enable Register (PERP)	Read / Write
0x025D	Port P Polarity Select Register (PPSP)	Read / Write
0x025E	Port P Interrupt Enable Register (PIEP)	Read / Write
0x025F	Port P Interrupt Flag Register (PIFP)	Read / Write
0x0260	Port H Data Register (PTH)	Read / Write
0x0261	Port H Input Register (PTIH)	Read
0x0262	Port H Data Direction Register (DDRH)	Read / Write
0x0263	Port H Reduced Drive Register (RDRH)	Read / Write
0x0264	Port H Pull Device Enable Register (PERH)	Read / Write
0x0265	Port H Polarity Select Register (PPSH)	Read / Write
0x0266	Port H Interrupt Enable Register (PIEH)	Read / Write

Table 24-2. PIM Memory Map (Sheet 3 of 3)

Address	Use	Access
0x0267	Port H Interrupt Flag Register (PIFH)	Read / Write
0x0268	Port J Data Register (PTJ)	Read / Write[1]
0x0269	Port J Input Register (PTIJ)	Read
0x026A	Port J Data Direction Register (DDRJ)	Read / Write[1]
0x026B	Port J Reduced Drive Register (RDRJ)	Read / Write[1]
0x026C	Port J Pull Device Enable Register (PERJ)	Read / Write[1]
0x026D	Port J Polarity Select Register (PPSJ)	Read / Write[1]
0x026E	Port J Interrupt Enable Register (PIEJ)	Read / Write[1]
0x026F	Port J Interrupt Flag Register (PIFJ)	Read / Write[1]
0x0270 : 0x0277	PIM Reserved	—
0x0278	Port AD1 Data Register 0 (PT0AD1)	Read / Write
0x0279	Port AD1 Data Register 1 (PT1AD1)	Read / Write
0x027A	Port AD1 Data Direction Register 0 (DDR0AD1)	Read / Write
0x027B	Port AD1 Data Direction Register 1 (DDR1AD1)	Read / Write
0x027C	Port AD1 Reduced Drive Register 0 (RDR0AD1)	Read / Write
0x027D	Port AD1 Reduced Drive Register 1 (RDR1AD1)	Read / Write
0x027E	Port AD1 Pull Up Enable Register 0 (PER0AD1)	Read / Write
0x027F	Port AD1 Pull Up Enable Register 1 (PER1AD1)	Read / Write

1. Write access not applicable for one or more register bits. Refer to Section 24.0.5, "Register Descriptions".

24.0.5 Register Descriptions

Table 24-3 summarizes the effect on the various configuration bits, data direction (DDR), output level (IO), reduced drive (RDR), pull enable (PE), pull select (PS), and interrupt enable (IE) for the ports.

The configuration bit PS is used for two purposes:

1. Configure the sensitive interrupt edge (rising or falling), if interrupt is enabled.
2. Select either a pull-up or pull-down device if PE is active.

Table 24-3. Pin Configuration Summary

DDR	IO	RDR	PE	PS[1]	IE[2]	Function	Pull Device	Interrupt
0	x	x	0	x	0	Input	Disabled	Disabled
0	x	x	1	0	0	Input	Pull Up	Disabled
0	x	x	1	1	0	Input	Pull Down	Disabled
0	x	x	0	0	1	Input	Disabled	Falling edge
0	x	x	0	1	1	Input	Disabled	Rising edge
0	x	x	1	0	1	Input	Pull Up	Falling edge
0	x	x	1	1	1	Input	Pull Down	Rising edge
1	0	0	x	x	0	Output, full drive to 0	Disabled	Disabled
1	1	0	x	x	0	Output, full drive to 1	Disabled	Disabled
1	0	1	x	x	0	Output, reduced drive to 0	Disabled	Disabled
1	1	1	x	x	0	Output, reduced drive to 1	Disabled	Disabled
1	0	0	x	0	1	Output, full drive to 0	Disabled	Falling edge
1	1	0	x	1	1	Output, full drive to 1	Disabled	Rising edge
1	0	1	x	0	1	Output, reduced drive to 0	Disabled	Falling edge
1	1	1	x	1	1	Output, reduced drive to 1	Disabled	Rising edge

1. Always “0” on Port A, B, C, D, E, K, AD0, and AD1.
2. Applicable only on Port P, H, and J.

NOTE

All register bits in this module are completely synchronous to internal clocks during a register read.

Register Name		Bit 7	6	5	4	3	2	1	Bit 0
PORTA	R/W	PA7	PA6	PA5	PA4	PA3	PA2	PA1	PA0
PORTB	R/W	PB7	PB6	PB5	PB4	PB3	PB2	PB1	PB0
DDRA	R/W	DDRA7	DDRA6	DDRA5	DDRA4	DDRA3	DDRA2	DDRA1	DDRA0
DDRB	R/W	DDRB7	DDRB6	DDRB5	DDRB4	DDRB3	DDRB2	DDRB1	DDRB0

= Unimplemented or Reserved

Figure 24-2. PIM Register Summary (Sheet 1 of 7)

Register Name		Bit 7	6	5	4	3	2	1	Bit 0
Reserved	R	0	0	0	0	0	0	0	0
	W								
Reserved	R	0	0	0	0	0	0	0	0
	W								
Reserved	R	0	0	0	0	0	0	0	0
	W								
Reserved	R	0	0	0	0	0	0	0	0
	W								
PORTE	R	PE7	PE6	PE5	PE4	PE3	PE2	PE1	PE0
	W								
DDRE	R	DDRE7	DDRE6	DDRE5	DDRE4	DDRE3	DDRE2	0	0
	W								
Non-PIM Address Range	R	Non-PIM Address Range							
	W								
PUCR	R	PUPKE	BKPUE	0	PUPEE	PUPDE[1]	PUPCE[1]	PUPBE	PUPAE
	W								
RDRIV	R	RDPK	0	0	RDPE	RDPD[1]	RDPC[1]	RDPB	RDPA
	W								
Non-PIM Address Range	R	Non-PIM Address Range							
	W								
ECLKCTL	R	NECLK	NCLKX2	0	0	0	0	EDIV1	EDIV0
	W								
Reserved	R	0	0	0	0	0	0	0	0
	W								
IRQCR	R	IRQE	IRQEN	0	0	0	0	0	0
	W								
Reserved	R	0	0	0	0	0	0	0	0
	W								

= Unimplemented or Reserved

Figure 24-2. PIM Register Summary (Sheet 2 of 7)

Register Name		Bit 7	6	5	4	3	2	1	Bit 0
Non-PIM Address Range	R/W	Non-PIM Address Range							
PORTK	R	PK7	0	PK5	PK4	PK3	PK2	PK1	PK0
	W								
DDRK	R	DDRK7	0	DDRK5	DDRK4	DDRK3	DDRK2	DDRK1	DDRK0
	W								
Non-PIM Address Range	R/W	Non-PIM Address Range							
PTT	R	PTT7	PTT6	PTT5	PTT4	PTT3	PTT2	PTT1	PTT0
	W								
PTIT	R	PTIT7	PTIT6	PTIT5	PTIT4	PTIT3	PTIT2	PTIT1	PTIT0
	W								
DDRT	R	DDRT7	DDRT6	DDRT5	DDRT4	DDRT3	DDRT2	DDRT1	DDRT0
	W								
RDRT	R	RDRT7	RDRT6	RDRT5	RDRT4	RDRT3	RDRT2	RDRT1	RDRT0
	W								
PERT	R	PERT7	PERT6	PERT5	PERT4	PERT3	PERT2	PERT1	PERT0
	W								
PPST	R	PPST7	PPST6	PPST5	PPST4	PPST3	PPST2	PPST1	PPST0
	W								
Reserved	R	0	0	0	0	0	0	0	0
	W								
Reserved	R	0	0	0	0	0	0	0	0
	W								
PTS	R	PTS7	PTS6	PTS5	PTS4	PTS3	PTS2	PTS1	PTS0
	W								
PTIS	R	PTIS7	PTIS6	PTIS5	PTIS4	PTIS3	PTIS2	PTIS1	PTIS0
	W								

= Unimplemented or Reserved

Figure 24-2. PIM Register Summary (Sheet 3 of 7)

Register Name		Bit 7	6	5	4	3	2	1	Bit 0
DDRS	R/W	DDRS7	DDRS6	DDRS5	DDRS4	DDRS3	DDRS2	DDRS1	DDRS0
RDRS	R/W	RDRS7	RDRS6	RDRS5	RDRS4	RDRS3	RDRS2	RDRS1	RDRS0
PERS	R/W	PERS7	PERS6	PERS5	PERS4	PERS3	PERS2	PERS1	PERS0
PPSS	R/W	PPSS7	PPSS6	PPSS5	PPSS4	PPSS3	PPSS2	PPSS1	PPSS0
WOMS	R/W	WOMS7	WOMS6	WOMS5	WOMS4	WOMS3	WOMS2	WOMS1	WOMS0
Reserved	R	0	0	0	0	0	0	0	0
	W								
PTM	R/W	PTM7	PTM6	PTM5	PTM4	PTM3	PTM2	PTM1	PTM0
PTIM	R	PTIM7	PTIM6	PTIM5	PTIM4	PTIM3	PTIM2	PTIM1	PTIM0
	W								
DDRM	R/W	DDRM7	DDRM6	DDRM5	DDRM4	DDRM3	DDRM2	DDRM1	DDRM0
RDRM	R/W	RDRM7	RDRM6	RDRM5	RDRM4	RDRM3	RDRM2	RDRM1	RDRM0
PERM	R/W	PERM7	PERM6	PERM5	PERM4	PERM3	PERM2	PERM1	PERM0
PPSM	R/W	PPSM7	PPSM6	PPSM5	PPSM4	PPSM3	PPSM2	PPSM1	PPSM0
WOMM	R/W	WOMM7	WOMM6	WOMM5	WOMM4	WOMM3	WOMM2	WOMM1	WOMM0
MODRR	R	0	MODRR6[1]	MODRR5	MODRR4	MODRR3	MODRR2	MODRR1	MODRR0
	W								
PTP	R/W	PTP7	PTP6	PTP5	PTP4	PTP3	PTP2	PTP1	PTP0

= Unimplemented or Reserved

Figure 24-2. PIM Register Summary (Sheet 4 of 7)

Register Name		Bit 7	6	5	4	3	2	1	Bit 0
PTIP	R	PTIP7	PTIP6	PTIP5	PTIP4	PTIP3	PTIP2	PTIP1	PTIP0
	W								
DDRP	R/W	DDRP7	DDRP6	DDRP5	DDRP4	DDRP3	DDRP2	DDRP1	DDRP0
RDRP	R/W	RDRP7	RDRP6	RDRP5	RDRP4	RDRP3	RDRP2	RDRP1	RDRP0
PERP	R/W	PERP7	PERP6	PERP5	PERP4	PERP3	PERP2	PERP1	PERP0
PPSP	R/W	PPSP7	PPSP6	PPSP5	PPSP4	PPSP3	PPSP2	PPSP1	PPSP0
PIEP	R/W	PIEP7	PIEP6	PIEP5	PIEP4	PIEP3	PIEP2	PIEP1	PIEP0
PIFP	R/W	PIFP7	PIFP6	PIFP5	PIFP4	PIFP3	PIFP2	PIFP1	PIFP0
PTH	R/W	PTH7	PTH6	PTH5	PTH4	PTH3	PTH2	PTH1	PTH0
PTIH	R	PTIH7	PTIH6	PTIH5	PTIH4	PTIH3	PTIH2	PTIH1	PTIH0
	W								
DDRH	R/W	DDRH7	DDRH6	DDRH5	DDRH4	DDRH3	DDRH2	DDRH1	DDRH0
RDRH	R/W	RDRH7	RDRH6	RDRH5	RDRH4	RDRH3	RDRH2	RDRH1	RDRH0
PERH	R/W	PERH7	PERH6	PERH5	PERH4	PERH3	PERH2	PERH1	PERH0
PPSH	R/W	PPSH7	PPSH6	PPSH5	PPSH4	PPSH3	PPSH2	PPSH1	PPSH0
PIEH	R/W	PIEH7	PIEH6	PIEH5	PIEH4	PIEH3	PIEH2	PIEH1	PIEH0
PIFH	R/W	PIFH7	PIFH6	PIFH5	PIFH4	PIFH3	PIFH2	PIFH1	PIFH0

= Unimplemented or Reserved

Figure 24-2. PIM Register Summary (Sheet 5 of 7)

Register Name		Bit 7	6	5	4	3	2	1	Bit 0
PTJ	R	PTJ7	PTJ6	0	0	0	0	PTJ1	PTJ0
	W								
PTIJ	R	PTIJ7	PTIJ6	0	0	0	0	PTIJ1	PTIJ0
	W								
DDRJ	R	DDRJ7	DDRJ6	0	0	0	0	DDRJ1	DDRJ0
	W								
RDRJ	R	RDRJ7	RDRJ6	0	0	0	0	RDRJ1	RDRJ0
	W								
PERJ	R	PERJ7	PERJ6	0	0	0	0	PERJ1	PERJ0
	W								
PPSJ	R	PPSJ7	PPSJ6	0	0	0	0	PPSJ1	PPSJ0
	W								
PIEJ	R	PIEJ7	PIEJ6	0	0	0	0	PIEJ1	PIEJ0
	W								
PIFJ	R	PPSJ7	PPSJ6	0	0	0	0	PPSJ1	PPSJ0
	W								
Reserved	R	0	0	0	0	0	0	0	0
	W								
Reserved	R	0	0	0	0	0	0	0	0
	W								
Reserved	R	0	0	0	0	0	0	0	0
	W								
Reserved	R	0	0	0	0	0	0	0	0
	W								
Reserved	R	0	0	0	0	0	0	0	0
	W								
Reserved	R	0	0	0	0	0	0	0	0
	W								
Reserved	R	0	0	0	0	0	0	0	0
	W								

= Unimplemented or Reserved

Figure 24-2. PIM Register Summary (Sheet 6 of 7)

Register Name		Bit 7	6	5	4	3	2	1	Bit 0
Reserved	R	0	0	0	0	0	0	0	0
	W								
PT0AD1	R/W	PT1AD115	PT1AD114	PT1AD113	PT1AD112	PT1AD111	PT1AD110	PT1AD19	PT1AD18
PT1AD1	R/W	PT1AD17	PT1AD16	PT1AD15	PT1AD14	PT1AD13	PT1AD12	PT1AD11	PT1AD10
DDR0AD1	R/W	DDR1AD115	DDR1AD114	DDR1AD113	DDR1AD112	DDR1AD111	DDR1AD110	DDR1AD19	DDR1AD18
DDR1AD1	R/W	DDR1AD17	DDR1AD16	DDR1AD15	DDR1AD14	DDR1AD13	DDR1AD12	DDR1AD11	DDR1AD10
RDR0AD1	R/W	RDR1AD115	RDR1AD114	RDR1AD113	RDR1AD112	RDR1AD111	RDR1AD110	RDR1AD19	RDR1AD18
RDR1AD1	R/W	RDR1AD17	RDR1AD16	RDR1AD15	RDR1AD14	RDR1AD13	RDR1AD12	RDR1AD11	RDR1AD10
PER0AD1	R/W	PER1AD115	PER1AD114	PER1AD113	PER1AD112	PER1AD111	PER1AD110	PER1AD19	PER1AD18
PER1AD1	R/W	PER1AD17	PER1AD16	PER1AD15	PER1AD14	PER1AD13	PER1AD12	PER1AD11	PER1AD10

= Unimplemented or Reserved

Figure 24-2. PIM Register Summary (Sheet 7 of 7)

1. Register implemented, function disabled: Written values can be read back.

24.0.5.1 Port A Data Register (PORTA)

	7	6	5	4	3	2	1	0
R/W	PA7	PA6	PA5	PA4	PA3	PA2	PA1	PA0
Reset	0	0	0	0	0	0	0	0

Figure 24-3. Port A Data Register (PORTA)

Read: Anytime.

Write: Anytime.

Table 24-4. PORTA Field Descriptions

Field	Description
7–0 PA[7:0]	Port A — Port A pins 7–0 can be used as general purpose I/O. If the data direction bits of the associated I/O pins are set to logic level “1”, a read returns the value of the port register, otherwise the buffered pin input state is read.

24.0.5.2 Port B Data Register (PORTB)

	7	6	5	4	3	2	1	0
R W	PB7	PB6	PB5	PB4	PB3	PB2	PB1	PB0
Reset	0	0	0	0	0	0	0	0

Figure 24-4. Port B Data Register (PORTB)

Read: Anytime.

Write: Anytime.

Table 24-5. PORTB Field Descriptions

Field	Description
7–0 PB[7:0]	**Port B** — Port B pins 7–0 can be used as general purpose I/O. If the data direction bits of the associated I/O pins are set to logic level “1”, a read returns the value of the port register, otherwise the buffered pin input state is read.

24.0.5.3 Port A Data Direction Register (DDRA)

	7	6	5	4	3	2	1	0
R W	DDRA7	DDRA6	DDRA5	DDRA4	DDRA3	DDRA2	DDRA1	DDRA0
Reset	0	0	0	0	0	0	0	0

Figure 24-5. Port A Data Direction Register (DDRA)

Read: Anytime.

Write: Anytime.

Table 24-6. DDRA Field Descriptions

Field	Description
7–0 DDRA[7:0]	Data Direction Port A — This register controls the data direction for port A. DDRA determines whether each pin is an input or output. A logic level “1” causes the associated port pin to be an output and a logic level “0” causes the associated pin to be a high-impedance input. 0 Associated pin is configured as input. 1 Associated pin is configured as output. **Note:** Due to internal synchronization circuits, it can take up to 2 bus clock cycles until the correct value is read on PORTA after changing the DDRA register.

24.0.5.4 Port B Data Direction Register (DDRB)

	7	6	5	4	3	2	1	0
R W	DDRB7	DDRB6	DDRB5	DDRB4	DDRB3	DDRB2	DDRB1	DDRB0
Reset	0	0	0	0	0	0	0	0

Figure 24-6. Port B Data Direction Register (DDRB)

Read: Anytime.

Write: Anytime.

Table 24-7. DDRB Field Descriptions

Field	Description
7–0 DDRB[7:0]	Data Direction Port B — This register controls the data direction for port B. DDRB determines whether each pin is an input or output. A logic level “1” causes the associated port pin to be an output and a logic level “0” causes the associated pin to be a high-impedance input. 0 Associated pin is configured as input. 1 Associated pin is configured as output. **Note:** Due to internal synchronization circuits, it can take up to 2 bus clock cycles until the correct value is read on PORTB after changing the DDRB register.

24.0.5.5 Port E Data Register (PORTE)

	7	6	5	4	3	2	1	0
R W	PE7	PE6	PE5	PE4	PE3	PE2	PE1	PE0
Alt. Func.	$\overline{\text{XCLKS}}$ or ECLKX2	MODB	MODA	ECLK	EROMCTL		$\overline{\text{IRQ}}$	$\overline{\text{XIRQ}}$
Reset	0	0	0	0	0	0	—[1]	—[1]

= Unimplemented or Reserved

Figure 24-7. Port E Data Register (PORTE)

1. These registers are reset to zero. Two bus clock cycles after reset release the register values are updated with the associated pin values.

Read: Anytime.

Write: Anytime.

Table 24-8. PORTE Field Descriptions

Field	Description
7–0 PE[7:0]	**Port E** — Port E bits 7–0 are associated with external bus control signals and interrupt inputs. These include mode select (MODB, MODA), E clock, double frequency E clock, $\overline{IRQ}$, and $\overline{XIRQ}$. When not used for any of these specific functions, Port E pins 7–2 can be used as general purpose I/O and pins 1–0 can be used as general purpose inputs. If the data direction bits of the associated I/O pins are set to logic level “1”, a read returns the value of the port register, otherwise the buffered pin input state is read. Pins 6 and 5 are inputs with enabled pull-down devices while RESET pin is low. Pins 7 and 3 are inputs with enabled pull-up devices while RESET pin is low.

24.0.5.6 Port E Data Direction Register (DDRE)

	7	6	5	4	3	2	1	0
R	DDRE7	DDRE6	DDRE5	DDRE4	DDRE3	DDRE2	0	0
W								
Reset	0	0	0	0	0	0	0	0

= Unimplemented or Reserved

Figure 24-8. Port E Data Direction Register (DDRE)

Read: Anytime.

Write: Anytime.

Table 24-9. DDRE Field Descriptions

Field	Description
7–0 DDRE[7:2]	Data Direction Port E — his register controls the data direction for port E. DDRE determines whether each pin is an input or output. A logic level “1” causes the associated port pin to be an output and a logic level “0” causes the associated pin to be a high-impedance input. Port E bit 1 (associated with $\overline{IRQ}$) and bit 0 (associated with $\overline{XIRQ}$) cannot be configured as outputs. Port E, bits 1 and 0, can be read regardless of whether the alternate interrupt function is enabled. 0 Associated pin is configured as input. 1 Associated pin is configured as output. **Note:** Due to internal synchronization circuits, it can take up to 2 bus clock cycles until the correct value is read on PORTE after changing the DDRE register.

24.0.5.7 S12X_EBI Ports, BKGD, VREGEN Pin Pull-up Control Register (PUCR)

	7	6	5	4	3	2	1	0
R W	PUPKE	BKPUE	0	PUPEE	PUPDE[1]	PUPCE[1]	PUPBE	PUPAE
Reset	1	1	0	1	0	0	0	0

= Unimplemented or Reserved

Figure 24-9. S12X_EBI Ports, BKGD, VREGEN Pin Pull-up Control Register (PUCR)

1. Register implemented, function disabled: Written values can be read back.

Read: Anytime in single-chip modes.

Write: Anytime, except BKPUE which is writable in special test mode only.

This register is used to enable pull-up devices for the associated ports A, B E, and K. Pull-up devices are assigned on a per-port basis and apply to any pin in the corresponding port currently configured as an input.

Table 24-10. PUCR Field Descriptions

Field	Description
7 PUPKE	**Pull-up Port K Enable** 0 Port K pull-up devices are disabled. 1 Enable pull-up devices for Port K input pins.
6 BKPUE	**BKGD and VREGEN Pin Pull-up Enable** 0 BKGD and V_{REGEN} pull-up devices are disabled. 1 Enable pull-up devices on BKGD and V_{REGEN} pins.
4 PUPEE	**Pull-up Port E Enable** 0 Port E pull-up devices on bit 7, 4–0 are disabled. 1 Enable pull-up devices for Port E input pins bits 7, 4–0. **Note:** Bits 5 and 6 of Port E have pull-down devices which are only enabled during reset. This bit has no effect on these pins.
1 PUPBE	**Pull-up Port B Enable** 0 Port B pull-up devices are disabled. 1 Enable pull-up devices for all Port B input pins.
0 PUPAE	**Pull-up Port A Enable** 0 Port A pull-up devices are disabled. 1 Enable pull-up devices for all Port A input pins.

24.0.5.8 S12X_EBI Ports Reduced Drive Register (RDRIV)

	7	6	5	4	3	2	1	0
R	RDPK	0	0	RDPE	RDPD[1]	RDPC[1]	RDPB	RDPA
W								
Reset	0	0	0	0	0	0	0	0

= Unimplemented or Reserved

Figure 24-10. S12X_EBI Ports Reduced Drive Register (RDRIV)

1. Register implemented, function disabled: Written values can be read back.

Read: Anytime.

Write: Anytime.

This register is used to select reduced drive for the pins associated with ports A, B, E, and K. If enabled, the pins drive at about 1/6 of the full drive strength. The reduced drive function is independent of which function is being used on a particular pin.

The reduced drive functionality does not take effect on the pins in emulation modes.

Table 24-11. RDRIV Field Descriptions

Field	Description
7 RDPK	**Reduced Drive of Port K** 0 All port K output pins have full drive enabled. 1 All port K output pins have reduced drive enabled.
4 RDPE	**Reduced Drive of Port E** 0 All port E output pins have full drive enabled. 1 All port E output pins have reduced drive enabled.
1 RDPB	**Reduced Drive of Port B** 0 All port B output pins have full drive enabled. 1 All port B output pins have reduced drive enabled.
0 RDPA	**Reduced Drive of Ports A** 0 All Port A output pins have full drive enabled. 1 All port A output pins have reduced drive enabled.

24.0.5.9 ECLK Control Register (ECLKCTL)

	7	6	5	4	3	2	1	0	
R W	NECLK	NCLKX2	0	0	0	0	EDIV1	EDIV0	
Reset[1]	Mode Dependent	1	0	0	0	0	0	0	Mode
SS	0	1	0	0	0	0	0	0	Special Single-Chip
ES	1	1	0	0	0	0	0	0	Emulation Single-Chip
ST	0	1	0	0	0	0	0	0	Special Test
EX	0	1	0	0	0	0	0	0	Emulation Expanded
NS	1	1	0	0	0	0	0	0	Normal Single-Chip
NX	0	1	0	0	0	0	0	0	Normal Expanded

= Unimplemented or Reserved

Figure 24-11. ECLK Control Register (ECLKCTL)

1. Reset values in emulation modes are identical to those of the target mode.

Read: Anytime.

Write: Anytime.

The ECLKCTL register is used to control the availability of the free-running clocks and the free-running clock divider.

Table 24-12. ECLKCTL Field Descriptions

Field	Description
7 NECLK	**No ECLK** — This bit controls the availability of a free-running clock on the ECLK pin. Clock output is always active in emulation modes and if enabled in all other operating modes. 0 ECLK enabled 1 ECLK disabled
6 NCLKX2	**No ECLKX2** — This bit controls the availability of a free-running clock on the ECLKX2 pin. This clock has a fixed rate of twice the internal bus clock. Clock output is always active in emulation modes and if enabled in all other operating modes. 0 ECLKX2 is enabled 1 ECLKX2 is disabled
1–0 EDIV[1:0]	**Free-Running ECLK Divider** — These bits determine the rate of the free-running clock on the ECLK pin. The usage of the bits is shown in Table 24-13. Divider is always disabled in emulation modes and active as programmed in all other operating modes.

Table 24-13. Free-Running ECLK Clock Rate

EDIV[1:0]	Rate of Free-Running ECLK
00	ECLK = Bus clock rate
01	ECLK = Bus clock rate divided by 2
10	ECLK = Bus clock rate divided by 3
11	ECLK = Bus clock rate divided by 4

24.0.5.10 IRQ Control Register (IRQCR)

	7	6	5	4	3	2	1	0
R	IRQE	IRQEN	0	0	0	0	0	0
W								
Reset	0	1	0	0	0	0	0	0

= Unimplemented or Reserved

Figure 24-12. IRQ Control Register (IRQCR)

Read: See individual bit descriptions below.

Write: See individual bit descriptions below.

Table 24-14. IRQCR Field Descriptions

Field	Description
7 IRQE	**IRQ Select Edge Sensitive Only** Special modes: Read or write anytime. Normal and emulation modes: Read anytime, write once. 0 $\overline{\text{IRQ}}$ configured for low level recognition. 1 $\overline{\text{IRQ}}$ configured to respond only to falling edges. Falling edges on the $\overline{\text{IRQ}}$ pin will be detected anytime IRQE = 1 and will be cleared only upon a reset or the servicing of the $\overline{\text{IRQ}}$ interrupt.
6 IRQEN	**External IRQ Enable** Read or write anytime. 0 External $\overline{\text{IRQ}}$ pin is disconnected from interrupt logic. 1 External $\overline{\text{IRQ}}$ pin is connected to interrupt logic.

24.0.5.11 Port K Data Register (PORTK)

	7	6	5	4	3	2	1	0
R	PK7	0	PK5	PK4	PK3	PK2	PK1	PK0
W								
Reset	0	0	0	0	0	0	0	0

Figure 24-13. Port K Data Register (PORTK)

Read: Anytime.

Write: Anytime.

Table 24-15. PORTK Field Descriptions

Field	Description
7–0 PK[7,5:0]	Port K — Port K pins 7–0 can be used as general-purpose I/O. If the data direction bits of the associated I/O pins are set to logic level “1”, a read returns the value of the port register, otherwise the buffered pin input state is read except for bit 6 which reads “0”.

24.0.5.12 Port K Data Direction Register (DDRK)

	7	6	5	4	3	2	1	0
R W	DDRK7	0	DDRK5	DDRK4	DDRK3	DDRK2	DDRK1	DDRK0
Reset	0	0	0	0	0	0	0	0

Figure 24-14. Port K Data Direction Register (DDRK)

Read: Anytime.

Write: Anytime.

This register controls the data direction for port K. DDRK determines whether each pin (except PK6) is an input or output. A logic level “1” causes the associated port pin to be an output and a logic level “0” causes the associated pin to be a high-impedance input.

Table 24-16. DDRK Field Descriptions

Field	Description
7–0 DDRK[7,5:0]	**Data Direction Port K** 0 Associated pin is configured as input. 1 Associated pin is configured as output. **Note:** Due to internal synchronization circuits, it can take up to 2 bus clock cycles until the correct value is read on PORTK after changing the DDRK register.

24.0.5.13 Port T Data Register (PTT)

	7	6	5	4	3	2	1	0
R W	PTT7	PTT6	PTT5	PTT4	PTT3	PTT2	PTT1	PTT0
ECT	IOC7	IOC6	IOC5	IOC4	IOC3	IOC2	IOC1	IOC0
Reset	0	0	0	0	0	0	0	0

Figure 24-15. Port T Data Register (PTT)

Read: Anytime.

Write: Anytime.

Table 24-17. PTT Field Descriptions

Field	Description
7–0 PTT[7:0]	**Port T** — Port T bits 7–0 are associated with ECT channels IOC7–IOC0 (*refer to ECT section*). When not used with the ECT, these pins can be used as general purpose I/O. If the data direction bits of the associated I/O pins are set to logic level “1”, a read returns the value of the port register, otherwise the buffered pin input state is read.

24.0.5.14 Port T Input Register (PTIT)

	7	6	5	4	3	2	1	0
R	PTIT7	PTIT6	PTIT5	PTIT4	PTIT3	PTIT2	PTIT1	PTIT0
W								
Reset[1]	—	—	—	—	—	—	—	—

= Unimplemented or Reserved

Figure 24-16. Port T Input Register (PTIT)

1. These registers are reset to zero. Two bus clock cycles after reset release the register values are updated with the associated pin values.

Read: Anytime.

Write: Never, writes to this register have no effect.

Table 24-18. PTIT Field Descriptions

Field	Description
7–0 PTIT[7:0]	**Port T Input** — This register always reads back the buffered state of the associated pins. This can also be used to detect overload or short circuit conditions on output pins.

24.0.5.15 Port T Data Direction Register (DDRT)

	7	6	5	4	3	2	1	0
R W	DDRT7	DDRT6	DDRT5	DDRT4	DDRT3	DDRT2	DDRT1	DDRT0
Reset	0	0	0	0	0	0	0	0

Figure 24-17. Port T Data Direction Register (DDRT)

Read: Anytime.

Write: Anytime.

This register configures each port T pin as either input or output.

The ECT forces the I/O state to be an output for each timer port associated with an enabled output compare. In this case the data direction bits will not change.

The DDRT bits revert to controlling the I/O direction of a pin when the associated timer output compare is disabled.

The timer input capture always monitors the state of the pin.

Table 24-19. DDRT Field Descriptions

Field	Description
7–0 DDRT[7:0]	**Data Direction Port T** 0 Associated pin is configured as input. 1 Associated pin is configured as output. **Note:** Due to internal synchronization circuits, it can take up to 2 bus clock cycles until the correct value is read on PTT or PTIT registers, when changing the DDRT register.

24.0.5.16 Port T Reduced Drive Register (RDRT)

	7	6	5	4	3	2	1	0
R W	RDRT7	RDRT6	RDRT5	RDRT4	RDRT3	RDRT2	RDRT1	RDRT0
Reset	0	0	0	0	0	0	0	0

Figure 24-18. Port T Reduced Drive Register (RDRT)

Read: Anytime.

Write: Anytime.

This register configures the drive strength of each port T output pin as either full or reduced. If the port is used as input this bit is ignored.

Table 24-20. RDRT Field Descriptions

Field	Description
7–0 RDRT[7:0]	**Reduced Drive Port T** 0 Full drive strength at output. 1 Associated pin drives at about 1/6 of the full drive strength.

24.0.5.17 Port T Pull Device Enable Register (PERT)

	7	6	5	4	3	2	1	0
R W	PERT7	PERT6	PERT5	PERT4	PERT3	PERT2	PERT1	PERT0
Reset	0	0	0	0	0	0	0	0

Figure 24-19. Port T Pull Device Enable Register (PERT)

Read: Anytime.

Write: Anytime.

This register configures whether a pull-up or a pull-down device is activated, if the port is used as input. This bit has no effect if the port is used as output. Out of reset no pull device is enabled.

Table 24-21. PERT Field Descriptions

Field	Description
7–0 PERT[7:0]	**Pull Device Enable Port T** 0 Pull-up or pull-down device is disabled. 1 Either a pull-up or pull-down device is enabled.

24.0.5.18 Port T Polarity Select Register (PPST)

	7	6	5	4	3	2	1	0
R W	PPST7	PPST6	PPST5	PPST4	PPST3	PPST2	PPST1	PPST0
Reset	0	0	0	0	0	0	0	0

Figure 24-20. Port T Polarity Select Register (PPST)

Read: Anytime.

Write: Anytime.

This register selects whether a pull-down or a pull-up device is connected to the pin.

Table 24-22. PPST Field Descriptions

Field	Description
7–0 PPST[7:0]	**Pull Select Port T** 0 A pull-up device is connected to the associated port T pin, if enabled by the associated bit in register PERT and if the port is used as input. 1 A pull-down device is connected to the associated port T pin, if enabled by the associated bit in register PERT and if the port is used as input.

24.0.5.19 Port S Data Register (PTS)

	7	6	5	4	3	2	1	0
R W	PTS7	PTS6	PTS5	PTS4	PTS3	PTS2	PTS1	PTS0
SCI/SPI	$\overline{SS0}$	SCK0	MOSI0	MISO0	TXD1	RXD1	TXD0	RXD0
Reset	0	0	0	0	0	0	0	0

Figure 24-21. Port S Data Register (PTS)

Read: Anytime.

Write: Anytime.

Port S pins 7–4 are associated with the SPI0. The SPI0 pin configuration is determined by several status bits in the SPI0 module. *Refer to SPI section for details.* When not used with the SPI0, these pins can be used as general purpose I/O.

Port S bits 3–0 are associated with the SCI1 and SCI0. The SCI ports associated with transmit pins 3 and 1 are configured as outputs if the transmitter is enabled. The SCI ports associated with receive pins 2 and 0 are configured as inputs if the receiver is enabled. *Refer to SCI section for details.* When not used with the SCI, these pins can be used as general purpose I/O.

If the data direction bits of the associated I/O pins are set to logic level “1”, a read returns the value of the port register, otherwise the buffered pin input state is read.

24.0.5.20 Port S Input Register (PTIS)

	7	6	5	4	3	2	1	0
R	PTIS7	PTIS6	PTIS5	PTIS4	PTIS3	PTIS2	PTIS1	PTIS0
W								
Reset[1]	—	—	—	—	—	—	—	—

= Unimplemented or Reserved

Figure 24-22. Port S Input Register (PTIS)

1. These registers are reset to zero. Two bus clock cycles after reset release the register values are updated with the associated pin values.

Read: Anytime.

Write: Never, writes to this register have no effect.

This register always reads back the buffered state of the associated pins. This also can be used to detect overload or short circuit conditions on output pins.

24.0.5.21 Port S Data Direction Register (DDRS)

	7	6	5	4	3	2	1	0
R W	DDRS7	DDRS6	DDRS5	DDRS4	DDRS3	DDRS2	DDRS1	DDRS0
Reset	0	0	0	0	0	0	0	0

Figure 24-23. Port S Data Direction Register (DDRS)

Read: Anytime.

Write: Anytime.

This register configures each port S pin as either input or output.

If SPI0 is enabled, the SPI0 determines the pin direction. *Refer to SPI section for details*.

If the associated SCI transmit or receive channel is enabled this register has no effect on the pins. The pin is forced to be an output if a SCI transmit channel is enabled, it is forced to be an input if the SCI receive channel is enabled.

The DDRS bits revert to controlling the I/O direction of a pin when the associated channel is disabled.

Table 24-23. DDRS Field Descriptions

Field	Description
7–0 DDRS[7:0]	**Data Direction Port S** 0 Associated pin is configured as input. 1 Associated pin is configured as output. **Note:** Due to internal synchronization circuits, it can take up to 2 bus clock cycles until the correct value is read on PTS or PTIS registers, when changing the DDRS register.

24.0.5.22 Port S Reduced Drive Register (RDRS)

	7	6	5	4	3	2	1	0
R W	RDRS7	RDRS6	RDRS5	RDRS4	RDRS3	RDRS2	RDRS1	RDRS0
Reset	0	0	0	0	0	0	0	0

Figure 24-24. Port S Reduced Drive Register (RDRS)

Read: Anytime.

Write: Anytime.

This register configures the drive strength of each port S output pin as either full or reduced. If the port is used as input this bit is ignored.

Table 24-24. RDRS Field Descriptions

Field	Description
7–0 RDRS[7:0]	**Reduced Drive Port S** 0 Full drive strength at output. 1 Associated pin drives at about 1/6 of the full drive strength.

24.0.5.23 Port S Pull Device Enable Register (PERS)

	7	6	5	4	3	2	1	0
R W	PERS7	PERS6	PERS5	PERS4	PERS3	PERS2	PERS1	PERS0
Reset	1	1	1	1	1	1	1	1

Figure 24-25. Port S Pull Device Enable Register (PERS)

Read: Anytime.

Write: Anytime.

This register configures whether a pull-up or a pull-down device is activated, if the port is used as input or as output in wired-OR (open drain) mode. This bit has no effect if the port is used as push-pull output. Out of reset a pull-up device is enabled.

Table 24-25. PERS Field Descriptions

Field	Description
7–0 PERS[7:0]	**Pull Device Enable Port S** 0 Pull-up or pull-down device is disabled. 1 Either a pull-up or pull-down device is enabled.

24.0.5.24 Port S Polarity Select Register (PPSS)

	7	6	5	4	3	2	1	0
R W	PPSS7	PPSS6	PPSS5	PPSS4	PPSS3	PPSS2	PPSS1	PPSS0
Reset	0	0	0	0	0	0	0	0

Figure 24-26. Port S Polarity Select Register (PPSS)

Read: Anytime.

Write: Anytime.

This register selects whether a pull-down or a pull-up device is connected to the pin.

Table 24-26. PPSS Field Descriptions

Field	Description
7–0 PPSS[7:0]	**Pull Select Port S** 0 A pull-up device is connected to the associated port S pin, if enabled by the associated bit in register PERS and if the port is used as input or as wired-OR output. 1 A pull-down device is connected to the associated port S pin, if enabled by the associated bit in register PERS and if the port is used as input.

24.0.5.25 Port S Wired-OR Mode Register (WOMS)

	7	6	5	4	3	2	1	0
R W	WOMS7	WOMS6	WOMS5	WOMS4	WOMS3	WOMS2	WOMS1	WOMS0
Reset	0	0	0	0	0	0	0	0

Figure 24-27. Port S Wired-OR Mode Register (WOMS)

Read: Anytime.

Write: Anytime.

This register configures the output pins as wired-OR. If enabled the output is driven active low only (open-drain). A logic level of “1” is not driven. It applies also to the SPI and SCI outputs and allows a multipoint connection of several serial modules. These bits have no influence on pins used as inputs.

Table 24-27. WOMS Field Descriptions

Field	Description
7–0 WOMS[7:0]	**Wired-OR Mode Port S** 0 Output buffers operate as push-pull outputs. 1 Output buffers operate as open-drain outputs.

24.0.5.26 Port M Data Register (PTM)

	7	6	5	4	3	2	1	0
R W	PTM7	PTM6	PTM5	PTM4	PTM3	PTM2	PTM1	PTM0
CAN							TXCAN0	RXCAN0
Routed CAN0			TXCAN0	RXCAN0	TXCAN0	RXCAN0		
Routed CAN4	TXCAN4	RXCAN4	TXCAN4	RXCAN4				
Routed SPI0			SCK0	MOSI0	$\overline{SS0}$	MISO0		
Reset	0	0	0	0	0	0	0	0

Figure 24-28. Port M Data Register (PTM)

Read: Anytime.

Write: Anytime.

Port M pins 7–0 are associated with the CAN0, as well as the routed CAN0, CAN4, and SPI0 modules. When not used with any of the peripherals, these pins can be used as general purpose I/O.

If the data direction bits of the associated I/O pins are set to logic level “1”, a read returns the value of the port register, otherwise the buffered pin input state is read.

Table 24-28. PTM Field Descriptions

Field	Description
7–6 PTM[7:6]	The CAN4 function (TXCAN4 and RXCAN4) takes precedence over the general purpose I/O function if the CAN4 module is enabled. *Refer to MSCAN section for details.*
5–4 PTM[5:4]	The routed CAN0 function (TXCAN0 and RXCAN0) takes precedence over the routed CAN4, the routed SPI0 and the general purpose I/O function if the routed CAN0 module is enabled. The routed CAN4 function (TXCAN4 and RXCAN4) takes precedence over the routed SPI0 and general purpose I/O function if the routed CAN4 module is enabled. *Refer to MSCAN section for details.* The routed SPI0 function (SCK0 and MOSI0) takes precedence of the general purpose I/O function if the routed SPI0 is enabled. *Refer to SPI section for details.*

Table 24-28. PTM Field Descriptions (continued)

Field	Description
3–2 PTM[3:2]	The routed CAN0 function (TXCAN0 and RXCAN0) takes precedence over the routed SPI0 and the general purpose I/O function if the routed CAN0 module is enabled. *Refer to MSCAN section for details.* The routed SPI0 function ($\overline{SS0}$ and MISO0) takes precedence of the general purpose I/O function if the routed SPI0 is enabled and not in bidirectional mode. *Refer to SPI section for details.*
1–0 PTM[1:0]	The CAN0 function (TXCAN0 and RXCAN0) takes precedence over the general purpose I/O function if the CAN0 module is enabled. *Refer to MSCAN section for details.*

24.0.5.27 Port M Input Register (PTIM)

	7	6	5	4	3	2	1	0
R	PTIM7	PTIM6	PTIM5	PTIM4	PTIM3	PTIM2	PTIM1	PTIM0
W								
Reset[1]	—	—	—	—	—	—	—	—

= Unimplemented or Reserved

Figure 24-29. Port M Input Register (PTIM)

1. These registers are reset to zero. Two bus clock cycles after reset release the register values are updated with the associated pin values.

Read: Anytime.

Write: Never, writes to this register have no effect.

This register always reads back the buffered state of the associated pins. This can also be used to detect overload or short circuit conditions on output pins.

24.0.5.28 Port M Data Direction Register (DDRM)

	7	6	5	4	3	2	1	0
R W	DDRM7	DDRM6	DDRM5	DDRM4	DDRM3	DDRM2	DDRM1	DDRM0
Reset	0	0	0	0	0	0	0	0

Figure 24-30. Port M Data Direction Register (DDRM)

Read: Anytime.

Write: Anytime.

This register configures each port M pin as either input or output.

The CAN forces the I/O state to be an output for each port line associated with an enabled output (TXCAN). It also forces the I/O state to be an input for each port line associated with an enabled input (RXCAN). In those cases the data direction bits will not change.

The DDRM bits revert to controlling the I/O direction of a pin when the associated peripheral module is disabled.

Table 24-29. DDRM Field Descriptions

Field	Description
7–0 DDRM[7:0]	**Data Direction Port M** 0 Associated pin is configured as input. 1 Associated pin is configured as output. **Note:** Due to internal synchronization circuits, it can take up to 2 bus clock cycles until the correct value is read on PTM or PTIM registers, when changing the DDRM register.

24.0.5.29 Port M Reduced Drive Register (RDRM)

	7	6	5	4	3	2	1	0
R W	RDRM7	RDRM6	RDRM5	RDRM4	RDRM3	RDRM2	RDRM1	RDRM0
Reset	0	0	0	0	0	0	0	0

Figure 24-31. Port M Reduced Drive Register (RDRM)

Read: Anytime.

Write: Anytime.

This register configures the drive strength of each Port M output pin as either full or reduced. If the port is used as input this bit is ignored.

Table 24-30. RDRM Field Descriptions

Field	Description
7–0 RDRM[7:0]	**Reduced Drive Port M** 0 Full drive strength at output. 1 Associated pin drives at about 1/6 of the full drive strength.

24.0.5.30 Port M Pull Device Enable Register (PERM)

	7	6	5	4	3	2	1	0
R W	PERM7	PERM6	PERM5	PERM4	PERM3	PERM2	PERM1	PERM0
Reset	0	0	0	0	0	0	0	0

Figure 24-32. Port M Pull Device Enable Register (PERM)

Read: Anytime.

Write: Anytime.

This register configures whether a pull-up or a pull-down device is activated, if the port is used as input or wired-OR output. This bit has no effect if the port is used as push-pull output. Out of reset no pull device is enabled.

Table 24-31. PERM Field Descriptions

Field	Description
7–0 PERM[7:0]	**Pull Device Enable Port M** 0 Pull-up or pull-down device is disabled. 1 Either a pull-up or pull-down device is enabled.

24.0.5.31 Port M Polarity Select Register (PPSM)

	7	6	5	4	3	2	1	0
R W	PPSM7	PPSM6	PPSM5	PPSM4	PPSM3	PPSM2	PPSM1	PPSM0
Reset	0	0	0	0	0	0	0	0

Figure 24-33. Port M Polarity Select Register (PPSM)

Read: Anytime.

Write: Anytime.

This register selects whether a pull-down or a pull-up device is connected to the pin. If CAN is active, a pull-up device can be activated on the related RXCAN inputs, but not a pull-down.

Table 24-32. PPSM Field Descriptions

Field	Description
7–0 PPSM[7:0]	**Pull Select Port M** 0 A pull-up device is connected to the associated port M pin, if enabled by the associated bit in register PERM and if the port is used as general purpose or RXCAN input. 1 A pull-down device is connected to the associated port M pin, if enabled by the associated bit in register PERM and if the port is used as a general purpose but not as RXCAN.

24.0.5.32 Port M Wired-OR Mode Register (WOMM)

	7	6	5	4	3	2	1	0
R W	WOMM7	WOMM6	WOMM5	WOMM4	WOMM3	WOMM2	WOMM1	WOMM0
Reset	0	0	0	0	0	0	0	0

Figure 24-34. Port M Wired-OR Mode Register (WOMM)

Read: Anytime.

Write: Anytime.

This register configures the output pins as wired-OR. If enabled the output is driven active low only (open-drain). A logic level of “1” is not driven. It applies also to the CAN outputs and allows a multipoint connection of several serial modules. This bit has no influence on pins used as inputs.

Table 24-33. WOMM Field Descriptions

Field	Description
7–0 WOMM[7:0]	**Wired-OR Mode Port M** 0 Output buffers operate as push-pull outputs. 1 Output buffers operate as open-drain outputs.

24.0.5.33 Module Routing Register (MODRR)

	7	6	5	4	3	2	1	0
R	0	MODRR6[1]	MODRR5	MODRR4	MODRR3	MODRR2	MODRR1	MODRR0
W								
Reset	0	0	0	0	0	0	0	0

= Unimplemented or Reserved

Figure 24-35. Module Routing Register (MODRR)

1. Register implemented, function disabled: Written values can be read back.

Read: Anytime.

Write: Anytime.

This register configures the re-routing of CAN0, CAN4, SPI0, SPI1 on alternative ports.

Table 24-34. Module Routing Summary

Module	MODRR							Related Pins			
	6	5	4	3	2	1	0	RXCAN		TXCAN	
CAN0	x	x	x	x	x	0	0	PM0		PM1	
	x	x	x	x	x	0	1	PM2		PM3	
	x	x	x	x	x	1	0	PM4		PM5	
	x	x	x	x	x	1	1	PJ6		PJ7	
CAN4	x	x	x	0	0	x	x	PJ6		PJ7	
	x	x	x	0	1	x	x	PM4		PM5	
	x	x	x	1	0	x	x	PM6		PM7	
	x	x	x	1	1	x	x	Reserved			
								MISO	MOSI	SCK	$\overline{SS}$
SPI0	x	x	0	x	x	x	x	PS4	PS5	PS6	PS7
	x	x	1	x	x	x	x	PM2	PM4	PM5	PM3
SPI1	x	0	x	x	x	x	x	PP0	PP1	PP2	PP3
	x	1	x	x	x	x	x	PH0	PH1	PH2	PH3

24.0.5.34 Port P Data Register (PTP)

	7	6	5	4	3	2	1	0
R W	PTP7	PTP6	PTP5	PTP4	PTP3	PTP2	PTP1	PTP0
PWM	PWM7	PWM6	PWM5	PWM4	PWM3	PWM2	PWM1	PWM0
SPI					$\overline{SS1}$	SCK1	MOSI1	MISO1
Reset	0	0	0	0	0	0	0	0

Figure 24-36. Port P Data Register (PTP)

Read: Anytime.

Write: Anytime.

Port P pins 7–0 are associated with the PWM as well as the SPI1. These pins can be used as general purpose I/O when not used with any of the peripherals.

If the data direction bits of the associated I/O pins are set to logic level “1”, a read returns the value of the port register, otherwise the buffered pin input state is read.

The PWM function takes precedence over the general purpose I/O and the SPI1 function if the associated PWM channel is enabled. While channels 6-0 are output only if the respective channel is enabled, channel 7 can be PWM output or input if the shutdown feature is enabled. *Refer to PWM section for details.*

The SPI1 function takes precedence over the general purpose I/O function if enabled. *Refer to SPI section for details.*

24.0.5.35 Port P Input Register (PTIP)

	7	6	5	4	3	2	1	0
R	PTIP7	PTIP6	PTIP5	PTIP4	PTIP3	PTIP2	PTIP1	PTIP0
W								
Reset[1]	—	—	—	—	—	—	—	—

= Unimplemented or Reserved

Figure 24-37. Port P Input Register (PTIP)

1. These registers are reset to zero. Two bus clock cycles after reset release the register values are updated with the associated pin values.

Read: Anytime.

Write: Never, writes to this register have no effect.

This register always reads back the buffered state of the associated pins. This can also be used to detect overload or short circuit conditions on output pins.

24.0.5.36 Port P Data Direction Register (DDRP)

	7	6	5	4	3	2	1	0
R/W	DDRP7	DDRP6	DDRP5	DDRP4	DDRP3	DDRP2	DDRP1	DDRP0
Reset	0	0	0	0	0	0	0	0

Figure 24-38. Port P Data Direction Register (DDRP)

Read: Anytime.

Write: Anytime.

This register configures each port P pin as either input or output.

If the associated PWM channel or SPI module is enabled this register has no effect on the pins.

The PWM forces the I/O state to be an output for each port line associated with an enabled PWM7–0 channel. Channel 7 can force the pin to input if the shutdown feature is enabled. *Refer to PWM section for details.*

If SPI is enabled, the SPI determines the pin direction. *Refer to SPI section for details.*

The DDRP bits revert to controlling the I/O direction of a pin when the associated peripherals are disabled.

Table 24-35. DDRP Field Descriptions

Field	Description
7–0 DDRP[7:0]	**Data Direction Port P** 0 Associated pin is configured as input. 1 Associated pin is configured as output. **Note:** Due to internal synchronization circuits, it can take up to 2 bus clock cycles until the correct value is read on PTP or PTIP registers, when changing the DDRP register.

24.0.5.37 Port P Reduced Drive Register (RDRP)

	7	6	5	4	3	2	1	0
R/W	RDRP7	RDRP6	RDRP5	RDRP4	RDRP3	RDRP2	RDRP1	RDRP0
Reset	0	0	0	0	0	0	0	0

Figure 24-39. Port P Reduced Drive Register (RDRP)

Read: Anytime.

Write: Anytime.

This register configures the drive strength of each port P output pin as either full or reduced. If the port is used as input this bit is ignored.

Table 24-36. RDRP Field Descriptions

Field	Description
7–0 RDRP[7:0]	**Reduced Drive Port P** 0 Full drive strength at output. 1 Associated pin drives at about 1/6 of the full drive strength.

24.0.5.38 Port P Pull Device Enable Register (PERP)

	7	6	5	4	3	2	1	0
R W	PERP7	PERP6	PERP5	PERP4	PERP3	PERP2	PERP1	PERP0
Reset	0	0	0	0	0	0	0	0

Figure 24-40. Port P Pull Device Enable Register (PERP)

Read: Anytime.

Write: Anytime.

This register configures whether a pull-up or a pull-down device is activated, if the port is used as input. This bit has no effect if the port is used as output. Out of reset no pull device is enabled.

Table 24-37. PERP Field Descriptions

Field	Description
7–0 PERP[7:0]	**Pull Device Enable Port P** 0 Pull-up or pull-down device is disabled. 1 Either a pull-up or pull-down device is enabled.

24.0.5.39 Port P Polarity Select Register (PPSP)

	7	6	5	4	3	2	1	0
R W	PPSP7	PPSP6	PPSP5	PPSP4	PPSP3	PPSP2	PPSP1	PPSP0
Reset	0	0	0	0	0	0	0	0

Figure 24-41. Port P Polarity Select Register (PPSP)

Read: Anytime.

Write: Anytime.

This register serves a dual purpose by selecting the polarity of the active interrupt edge as well as selecting a pull-up or pull-down device if enabled.

Table 24-38. PPSP Field Descriptions

Field	Description
7–0 PPSP[7:0]	**Polarity Select Port P** 0 Falling edge on the associated port P pin sets the associated flag bit in the PIFP register.A pull-up device is connected to the associated port P pin, if enabled by the associated bit in register PERP and if the port is used as input. 1 Rising edge on the associated port P pin sets the associated flag bit in the PIFP register.A pull-down device is connected to the associated port P pin, if enabled by the associated bit in register PERP and if the port is used as input.

24.0.5.40 Port P Interrupt Enable Register (PIEP)

	7	6	5	4	3	2	1	0
R W	PIEP7	PIEP6	PIEP5	PIEP4	PIEP3	PIEP2	PIEP1	PIEP0
Reset	0	0	0	0	0	0	0	0

Figure 24-42. Port P Interrupt Enable Register (PIEP)

Read: Anytime.

Write: Anytime.

This register disables or enables on a per-pin basis the edge sensitive external interrupt associated with Port P.

Table 24-39. PIEP Field Descriptions

Field	Description
7–0 PIEP[7:0]	**Interrupt Enable Port P** 0 Interrupt is disabled (interrupt flag masked). 1 Interrupt is enabled.

24.0.5.41 Port P Interrupt Flag Register (PIFP)

	7	6	5	4	3	2	1	0
R W	PIFP7	PIFP6	PIFP5	PIFP4	PIFP3	PIFP2	PIFP1	PIFP0
Reset	0	0	0	0	0	0	0	0

Figure 24-43. Port P Interrupt Flag Register (PIFP)

Read: Anytime.

Write: Anytime.

Each flag is set by an active edge on the associated input pin. This could be a rising or a falling edge based on the state of the PPSP register. To clear this flag, write logic level “1” to the corresponding bit in the PIFP register. Writing a “0” has no effect.

Table 24-40. PIFP Field Descriptions

Field	Description
7–0 PIFP[7:0]	**Interrupt Flags Port P** 0 No active edge pending. Writing a “0” has no effect. 1 Active edge on the associated bit has occurred (an interrupt will occur if the associated enable bit is set). Writing a logic level “1” clears the associated flag.

24.0.5.42 Port H Data Register (PTH)

	7	6	5	4	3	2	1	0
R W	PTH7	PTH6	PTH5	PTH4	PTH3	PTH2	PTH1	PTH0
Routed SPI					$\overline{SS1}$	SCK1	MOSI1	MISO1
Reset	0	0	0	0	0	0	0	0

Figure 24-44. Port H Data Register (PTH)

Read: Anytime.

Write: Anytime.

Port H pins 7–0 are associated with the routed SPI1.

These pins can be used as general purpose I/O when not used with any of the peripherals.

If the data direction bits of the associated I/O pins are set to logic level “1”, a read returns the value of the port register, otherwise the buffered pin input state is read.

The routed SPI1 function takes precedence over the general purpose I/O function if the routed SPI1 is enabled. *Refer to SPI section for details.*

24.0.5.43 Port H Input Register (PTIH)

	7	6	5	4	3	2	1	0
R	PTIH7	PTIH6	PTIH5	PTIH4	PTIH3	PTIH2	PTIH1	PTIH0
W								
Reset[1]	—	—	—	—	—	—	—	—

= Unimplemented or Reserved

Figure 24-45. Port H Input Register (PTIH)

1. These registers are reset to zero. Two bus clock cycles after reset release the register values are updated with the associated pin values.

Read: Anytime.

Write: Never, writes to this register have no effect.

This register always reads back the buffered state of the associated pins. This can also be used to detect overload or short circuit conditions on output pins.

24.0.5.44 Port H Data Direction Register (DDRH)

	7	6	5	4	3	2	1	0
R W	DDRH7	DDRH6	DDRH5	DDRH4	DDRH3	DDRH2	DDRH1	DDRH0
Reset	0	0	0	0	0	0	0	0

Figure 24-46. Port H Data Direction Register (DDRH)

Read: Anytime.

Write: Anytime.

This register configures each port H pin as either input or output.

If the associated routed SPI module is enabled this register has no effect on the pins.

If a SPI module is enabled, the SPI determines the pin direction. *Refer to SPI section for details.*

The DDRH bits revert to controlling the I/O direction of a pin when the associated peripheral modules are disabled.

Table 24-41. DDRH Field Descriptions

Field	Description
7–0 DDRH[7:0]	**Data Direction Port H** 0 Associated pin is configured as input. 1 Associated pin is configured as output. **Note:** Due to internal synchronization circuits, it can take up to 2 bus clock cycles until the correct value is read on PTH or PTIH registers, when changing the DDRH register.

24.0.5.45 Port H Reduced Drive Register (RDRH)

	7	6	5	4	3	2	1	0
R W	RDRH7	RDRH6	RDRH5	RDRH4	RDRH3	RDRH2	RDRH1	RDRH0
Reset	0	0	0	0	0	0	0	0

Figure 24-47. Port H Reduced Drive Register (RDRH)

Read: Anytime.

Write: Anytime.

This register configures the drive strength of each Port H output pin as either full or reduced. If the port is used as input this bit is ignored.

Table 24-42. RDRH Field Descriptions

Field	Description
7–0 RDRH[7:0]	**Reduced Drive Port H** 0 Full drive strength at output. 1 Associated pin drives at about 1/6 of the full drive strength.

24.0.5.46 Port H Pull Device Enable Register (PERH)

	7	6	5	4	3	2	1	0
R W	PERH7	PERH6	PERH5	PERH4	PERH3	PERH2	PERH1	PERH0
Reset	0	0	0	0	0	0	0	0

Figure 24-48. Port H Pull Device Enable Register (PERH)

Read: Anytime.

Write: Anytime.

This register configures whether a pull-up or a pull-down device is activated, if the port is used as input. This bit has no effect if the port is used as output. Out of reset no pull device is enabled.

Table 24-43. PERH Field Descriptions

Field	Description
7–0 PERH[7:0]	**Pull Device Enable Port H** 0 Pull-up or pull-down device is disabled. 1 Either a pull-up or pull-down device is enabled.

24.0.5.47 Port H Polarity Select Register (PPSH)

	7	6	5	4	3	2	1	0
R W	PPSH7	PPSH6	PPSH5	PPSH4	PPSH3	PPSH2	PPSH1	PPSH0
Reset	0	0	0	0	0	0	0	0

Figure 24-49. Port H Polarity Select Register (PPSH)

Read: Anytime.

Write: Anytime.

This register serves a dual purpose by selecting the polarity of the active interrupt edge as well as selecting a pull-up or pull-down device if enabled.

Table 24-44. PPSH Field Descriptions

Field	Description
7–0 PPSH[7:0]	**Polarity Select Port H** 0 Falling edge on the associated port H pin sets the associated flag bit in the PIFH register. A pull-up device is connected to the associated port H pin, if enabled by the associated bit in register PERH and if the port is used as input. 1 Rising edge on the associated port H pin sets the associated flag bit in the PIFH register. A pull-down device is connected to the associated port H pin, if enabled by the associated bit in register PERH and if the port is used as input.

24.0.5.48 Port H Interrupt Enable Register (PIEH)

	7	6	5	4	3	2	1	0
R W	PIEH7	PIEH6	PIEH5	PIEH4	PIEH3	PIEH2	PIEH1	PIEH0
Reset	0	0	0	0	0	0	0	0

Figure 24-50. Port H Interrupt Enable Register (PIEH)

Read: Anytime.

Write: Anytime.

This register disables or enables on a per-pin basis the edge sensitive external interrupt associated with Port H.

Table 24-45. PIEH Field Descriptions

Field	Description
7–0 PIEH[7:0]	**Interrupt Enable Port H** 0 Interrupt is disabled (interrupt flag masked). 1 Interrupt is enabled.

24.0.5.49 Port H Interrupt Flag Register (PIFH)

	7	6	5	4	3	2	1	0
R W	PIFH7	PIFH6	PIFH5	PIFH4	PIFH3	PIFH2	PIFH1	PIFH0
Reset	0	0	0	0	0	0	0	0

Figure 24-51. Port H Interrupt Flag Register (PIFH)

Read: Anytime.

Write: Anytime.

Each flag is set by an active edge on the associated input pin. This could be a rising or a falling edge based on the state of the PPSH register. To clear this flag, write logic level “1” to the corresponding bit in the PIFH register. Writing a “0” has no effect.

Table 24-46. PIFH Field Descriptions

Field	Description
7–0 PIFH[7:0]	**Interrupt Flags Port H** 0 No active edge pending. Writing a “0” has no effect. 1 Active edge on the associated bit has occurred (an interrupt will occur if the associated enable bit is set). Writing a logic level “1” clears the associated flag.

24.0.5.50 Port J Data Register (PTJ)

	7	6	5	4	3	2	1	0
R W	PTJ7	PTJ6	0	0	0	0	PTJ1	PTJ0
CAN4	TXCAN4	RXCAN4						
IIC0	SCL0	SDA0						
Routed CAN0	TXCAN0	RXCAN0						
Reset	0	0	0	0	0	0	0	0

= Unimplemented or Reserved

Figure 24-52. Port J Data Register (PTJ)

Read: Anytime.

Write: Anytime.

Port J pins 7–6 are associated with the CAN4, IIC0, the routed CAN0 modules. These pins can be used as general purpose I/O when not used with any of the peripherals.

If the data direction bits of the associated I/O pins are set to logic level “1”, a read returns the value of the port register, otherwise the buffered pin input state is read except for bits 5-2 which read “0”.

Table 24-47. PTJ Field Descriptions

Field	Description
7–6 PJ[7:6]	The CAN4 function (TXCAN4 and RXCAN4) takes precedence over the IIC0, the routed CAN0 and the general purpose I/O function if the CAN4 module is enabled. The IIC0 function (SCL0 and SDA0) takes precedence over the routed CAN0 and the general purpose I/O function if the IIC0 is enabled. If the IIC0 module takes precedence the SDA0 and SCL0 outputs are configured as open drain outputs. *Refer to IIC section for details.* The routed CAN0 function (TXCAN0 and RXCAN0) takes precedence over the general purpose I/O function if the routed CAN0 module is enabled. *Refer to MSCAN section for details.*

24.0.5.51 Port J Input Register (PTIJ)

	7	6	5	4	3	2	1	0
R	PTIJ7	PTIJ6	0	0	0	0	PTIJ1	PTIJ0
W								
Reset[1]	0	0	0	0	0	0	0	0

= Unimplemented or Reserved

Figure 24-53. Port J Input Register (PTIJ)

1. These registers are reset to zero. Two bus clock cycles after reset release the register values are updated with the associated pin values.

Read: Anytime.

Write: Never, writes to this register have no effect.

This register always reads back the buffered state of the associated pins. This can be used to detect overload or short circuit conditions on output pins.

24.0.5.52 Port J Data Direction Register (DDRJ)

	7	6	5	4	3	2	1	0
R	DDRJ7	DDRJ6	0	0	0	0	DDRJ1	DDRJ0
W								
Reset	0	0	0	0	0	0	0	0

= Unimplemented or Reserved

Figure 24-54. Port J Data Direction Register (DDRJ)

Read: Anytime.

Write: Anytime.

This register configures each port J pin (except PJ5-2) as either input or output.

The CAN forces the I/O state to be an output on PJ7 (TXCAN4) and an input on pin PJ6 (RXCAN4). The IIC takes control of the I/O if enabled. In these cases the data direction bits will not change.

The DDRJ bits revert to controlling the I/O direction of a pin when the associated peripheral module is disabled.

Table 24-48. DDRJ Field Descriptions

Field	Description
7–0 DDRJ[7:6] DDRJ[1:0]	**Data Direction Port J** 0 Associated pin is configured as input. 1 Associated pin is configured as output. **Note:** Due to internal synchronization circuits, it can take up to 2 bus clock cycles until the correct value is read on PTJ or PTIJ registers, when changing the DDRJ register.

24.0.5.53 Port J Reduced Drive Register (RDRJ)

	7	6	5	4	3	2	1	0
R	RDRJ7	RDRJ6	0	0	0	0	RDRJ1	RDRJ0
W								
Reset	0	0	0	0	0	0	0	0

= Unimplemented or Reserved

Figure 24-55. Port J Reduced Drive Register (RDRJ)

Read: Anytime.

Write: Anytime.

This register configures the drive strength of each port J output pin as either full or reduced. If the port is used as input this bit is ignored.

Table 24-49. RDRJ Field Descriptions

Field	Description
7–0 RDRJ[7:6] RDRJ[1:0]	**Reduced Drive Port J** 0 Full drive strength at output. 1 Associated pin drives at about 1/6 of the full drive strength.

24.0.5.54 Port J Pull Device Enable Register (PERJ)

	7	6	5	4	3	2	1	0
R	PERJ7	PERJ6	0	0	0	0	PERJ1	PERJ0
W								
Reset	1	1	0	0	0	0	1	1

= Unimplemented or Reserved

Figure 24-56. Port J Pull Device Enable Register (PERJ)

Read: Anytime.

Write: Anytime.

This register configures whether a pull-up or a pull-down device is activated, if the port is used as input or as wired-OR output. This bit has no effect if the port is used as push-pull output. Out of reset a pull-up device is enabled.

Table 24-50. PERJ Field Descriptions

Field	Description
7–0 PERJ[7:6] PERJ[1:0]	**Pull Device Enable Port J** 0 Pull-up or pull-down device is disabled. 1 Either a pull-up or pull-down device is enabled.

24.0.5.55 Port J Polarity Select Register (PPSJ)

	7	6	5	4	3	2	1	0
R	PPSJ7	PPSJ6	0	0	0	0	PPSJ1	PPSJ0
W								
Reset	0	0	0	0	0	0	0	0

= Unimplemented or Reserved

Figure 24-57. Port J Polarity Select Register (PPSJ)

Read: Anytime.

Write: Anytime.

This register serves a dual purpose by selecting the polarity of the active interrupt edge as well as selecting a pull-up or pull-down device if enabled.

Table 24-51. PPSJ Field Descriptions

Field	Description
7–0 PPSJ[7:6] PPSJ[1:0]	**Polarity Select Port J** 0 Falling edge on the associated port J pin sets the associated flag bit in the PIFJ register. A pull-up device is connected to the associated port J pin, if enabled by the associated bit in register PERJ and if the port is used as general purpose input or as IIC port. 1 Rising edge on the associated port J pin sets the associated flag bit in the PIFJ register. A pull-down device is connected to the associated port J pin, if enabled by the associated bit in register PERJ and if the port is used as input.

24.0.5.56 Port J Interrupt Enable Register (PIEJ)

	7	6	5	4	3	2	1	0
R	PIEJ7	PIEJ6	0	0	0	0	PIEJ1	PIEJ0
W								
Reset	0	0	0	0	0	0	0	0

= Unimplemented or Reserved

Figure 24-58. Port J Interrupt Enable Register (PIEJ)

This register disables or enables on a per-pin basis the edge sensitive external interrupt associated with Port J.

Table 24-52. PIEJ Field Descriptions

Field	Description
7–0 PIEJ[7:6] PIEJ[1:0]	**Interrupt Enable Port J** 0 Interrupt is disabled (interrupt flag masked). 1 Interrupt is enabled.

24.0.5.57 Port J Interrupt Flag Register (PIFJ)

	7	6	5	4	3	2	1	0
R W	PIFJ7	PIFJ6	0	0	0	0	PIFJ1	PIFJ0
Reset	0	0	0	0	0	0	0	0

= Unimplemented or Reserved

Figure 24-59. Port J Interrupt Flag Register (PIFJ)

Read: Anytime.

Write: Anytime.

Each flag is set by an active edge on the associated input pin. This could be a rising or a falling edge based on the state of the PPSJ register. To clear this flag, write logic level “1” to the corresponding bit in the PIFJ register. Writing a “0” has no effect.

Table 24-53. PIEJ Field Descriptions

Field	Description
7–0 PIFJ[7:6] PIFJ[1:0]	**Interrupt Flags Port J** 0 No active edge pending. Writing a “0” has no effect. 1 Active edge on the associated bit has occurred (an interrupt will occur if the associated enable bit is set). Writing a logic level “1” clears the associated flag.

24.0.5.58 Port AD1 Data Register 0 (PT0AD1)

	7	6	5	4	3	2	1	0
R W	PT0AD115	PT0AD114	PT0AD113	PT0AD112	PT0AD111	PT0AD110	PT0AD19	PT0AD18
Reset	0	0	0	0	0	0	0	0

Figure 24-60. Port AD1 Data Register 0 (PT0AD1)

Read: Anytime.

Write: Anytime.

This register is associated with AD1 pins PAD[15:8]. These pins can also be used as general purpose I/O.

If the data direction bits of the associated I/O pins are set to 1, a read returns the value of the port register, otherwise the value at the pins is read.

24.0.5.59 Port AD1 Data Register 1 (PT1AD1)

	7	6	5	4	3	2	1	0
R W	PT1AD17	PT1AD16	PT1AD15	PT1AD14	PT1AD13	PT1AD12	PT1AD11	PT1AD10
Reset	0	0	0	0	0	0	0	0

Figure 24-61. Port AD1 Data Register 1 (PT1AD1)

Read: Anytime.

Write: Anytime.

This register is associated with AD1 pins PAD[7:0]. These pins can also be used as general purpose I/O.

If the data direction bits of the associated I/O pins are set to 1, a read returns the value of the port register, otherwise the value at the pins is read.

24.0.5.60 Port AD1 Data Direction Register 0 (DDR0AD1)

	7	6	5	4	3	2	1	0
R W	DDR0AD115	DDR0AD114	DDR0AD113	DDR0AD112	DDR0AD111	DDR0AD110	DDR0AD19	DDR0AD18
Reset	0	0	0	0	0	0	0	0

Figure 24-62. Port AD1 Data Direction Register 0 (DDR0AD1)

Read: Anytime.

Write: Anytime.

This register configures pin PAD[15:8] as either input or output.

Table 24-54. DDR0AD1 Field Descriptions

Field	Description
7–0 DDR0AD1[15:8]	**Data Direction Port AD1 Register 0** 0 Associated pin is configured as input. 1 Associated pin is configured as output. **Note:** Due to internal synchronization circuits, it can take up to 2 bus clock cycles until the correct value is read on PTAD10 register, when changing the DDR0AD1 register. **Note:** To use the digital input function on Port AD1 the ATD1 digital input enable register (ATD1DIEN0) has to be set to logic level “1”.

24.0.5.61 Port AD1 Data Direction Register 1 (DDR1AD1)

	7	6	5	4	3	2	1	0
R W	DDR1AD17	DDR1AD16	DDR1AD15	DDR1AD14	DDR1AD13	DDR1AD12	DDR1AD11	DDR1AD10
Reset	0	0	0	0	0	0	0	0

Figure 24-63. Port AD1 Data Direction Register 1 (DDR1AD1)

Read: Anytime.

Write: Anytime.

This register configures pins PAD[7:0] as either input or output.

Table 24-55. DDR1AD1 Field Descriptions

Field	Description
7–0 DDR1AD1[7:0]	**Data Direction Port AD1 Register 1** 0 Associated pin is configured as input. 1 Associated pin is configured as output. **Note:** Due to internal synchronization circuits, it can take up to 2 bus clock cycles until the correct value is read on PTAD11 register, when changing the DDR1AD1 register. **Note:** To use the digital input function on port AD1 the ATD1 digital input enable register (ATD1DIEN1) has to be set to logic level “1”.

24.0.5.62 Port AD1 Reduced Drive Register 0 (RDR0AD1)

	7	6	5	4	3	2	1	0
R W	RDR0AD115	RDR0AD114	RDR0AD113	RDR0AD112	RDR0AD111	RDR0AD110	RDR0AD19	RDR0AD18
Reset	0	0	0	0	0	0	0	0

Figure 24-64. Port AD1 Reduced Drive Register 0 (RDR0AD1)

Read: Anytime.

Write: Anytime.

This register configures the drive strength of each PAD[15:8] output pin as either full or reduced. If the port is used as input this bit is ignored.

Table 24-56. RDR0AD1 Field Descriptions

Field	Description
7–0 RDR0AD1[15:8]	**Reduced Drive Port AD1 Register 0** 0 Full drive strength at output. 1 Associated pin drives at about 1/6 of the full drive strength.

24.0.5.63 Port AD1 Reduced Drive Register 1 (RDR1AD1)

	7	6	5	4	3	2	1	0
R W	RDR1AD17	RDR1AD16	RDR1AD15	RDR1AD14	RDR1AD13	RDR1AD12	RDR1AD11	RDR1AD10
Reset	0	0	0	0	0	0	0	0

Figure 24-65. Port AD1 Reduced Drive Register 1 (RDR1AD1)

Read: Anytime.

Write: Anytime.

This register configures the drive strength of each PAD[7:0] output pin as either full or reduced. If the port is used as input this bit is ignored.

Table 24-57. RDR1AD1 Field Descriptions

Field	Description
7–0 RDR1AD1[7:0]	**Reduced Drive Port AD1 Register 1** 0 Full drive strength at output. 1 Associated pin drives at about 1/6 of the full drive strength.

24.0.5.64 Port AD1 Pull Up Enable Register 0 (PER0AD1)

	7	6	5	4	3	2	1	0
R W	PER0AD115	PER0AD114	PER0AD113	PER0AD112	PER0AD111	PER0AD110	PER0AD19	PER0AD18
Reset	0	0	0	0	0	0	0	0

Figure 24-66. Port AD1 Pull Up Enable Register 0 (PER0AD1)

Read: Anytime.

Write: Anytime.

This register activates a pull-up device on the respective PAD[15:8] pin if the port is used as input. This bit has no effect if the port is used as output. Out of reset no pull-up device is enabled.

Table 24-58. PER0AD1 Field Descriptions

Field	Description
7–0 PER0AD1[15:8]	**Pull Device Enable Port AD1 Register 0** 0 Pull-up device is disabled. 1 Pull-up device is enabled.

24.0.5.65 Port AD1 Pull Up Enable Register 1 (PER1AD1)

	7	6	5	4	3	2	1	0
R W	PER1AD17	PER1AD16	PER1AD15	PER1AD14	PER1AD13	PER1AD12	PER1AD11	PER1AD10
Reset	0	0	0	0	0	0	0	0

Figure 24-67. Port AD1 Pull Up Enable Register 1 (PER1AD1)

Read: Anytime.

Write: Anytime.

This register activates a pull-up device on the respective PAD[7:0] pin if the port is used as input. This bit has no effect if the port is used as output. Out of reset no pull-up device is enabled.

Table 24-59. PER1AD1 Field Descriptions

Field	Description
7–0 PER1AD1[7:0]	**Pull Device Enable Port AD1 Register 1** 0 Pull-up device is disabled. 1 Pull-up device is enabled.

Functional Description

Each pin except PE0, PE1, and BKGD can act as general purpose I/O. In addition each pin can act as an output from the external bus interface module or a peripheral module or an input to the external bus interface module or a peripheral module.

A set of configuration registers is common to all ports with exceptions in the expanded bus interface and ATD ports (Table 24-60). All registers can be written at any time; however a specific configuration might not become active.

Example: Selecting a pull-up device

This device does not become active while the port is used as a push-pull output.

Table 24-60. Register Availability per Port[1]

Port	Data	Data Direction	Input	Reduced Drive	Pull Enable	Polarity Select	Wired-OR Mode	Interrupt Enable	Interrupt Flag
A	yes	yes	—	yes	yes	—	—	—	—
B	yes	yes	—			—	—	—	—
E	yes	yes	—			—	—	—	—
K	yes	yes	—			—	—	—	—
T	yes	yes	yes	yes	yes	—	—	—	—
S	yes	yes	yes	yes	yes	yes	yes	—	—
M	yes	yes	yes	yes	yes	yes	yes	—	—
P	yes	yes	yes	yes	yes	yes	—	yes	yes
H	yes	yes	yes	yes	yes	yes	—	yes	yes

Table 24-60. Register Availability per Port[1]

Port	Data	Data Direction	Input	Reduced Drive	Pull Enable	Polarity Select	Wired-OR Mode	Interrupt Enable	Interrupt Flag
J	yes	yes	yes	yes	yes	yes	—	yes	yes
AD1	yes	yes	—	yes	yes	—	—	—	—

1. Each cell represents one register with individual configuration bits

24.0.6 Registers

24.0.6.1 Data Register

This register holds the value driven out to the pin if the pin is used as a general purpose I/O.

Writing to this register has only an effect on the pin if the pin is used as general purpose output. When reading this address, the buffered state of the pin is returned if the associated data direction register bit is set to “0”.

If the data direction register bits are set to logic level “1”, the contents of the data register is returned. This is independent of any other configuration (Figure 24-68).

24.0.6.2 Input Register

This is a read-only register and always returns the buffered state of the pin (Figure 24-68).

24.0.6.3 Data Direction Register

This register defines whether the pin is used as an input or an output.

If a peripheral module controls the pin the contents of the data direction register is ignored (Figure 24-68).

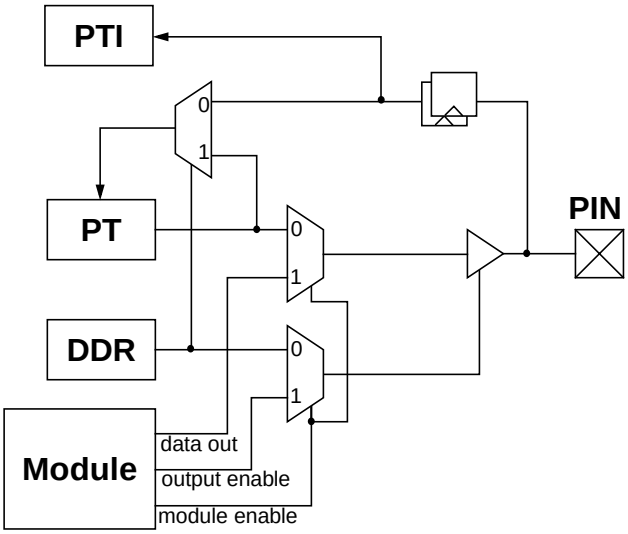

Figure 24-68. Illustration of I/O Pin Functionality

24.0.6.4 Reduced Drive Register

If the pin is used as an output this register allows the configuration of the drive strength.

24.0.6.5 Pull Device Enable Register

This register turns on a pull-up or pull-down device. It becomes active only if the pin is used as an input or as a wired-OR output.

24.0.6.6 Polarity Select Register

This register selects either a pull-up or pull-down device if enabled. It becomes active only if the pin is used as an input. A pull-up device can be activated if the pin is used as a wired-OR output. If the pin is used as an interrupt input this register selects the active interrupt edge.

24.0.6.7 Wired-OR Mode Register

If the pin is used as an output this register turns off the active high drive. This allows wired-OR type connections of outputs.

24.0.6.8 Interrupt Enable Register

If the pin is used as an interrupt input this register serves as a mask to the interrupt flag to enable/disable the interrupt.

24.0.6.9 Interrupt Flag Register

If the pin is used as an interrupt input this register holds the interrupt flag after a valid pin event.

24.0.6.10 Module Routing Register

This register supports the re-routing of the CAN0, CAN4, SPI0, SPI1, and SPI2 pins to alternative ports. This allows a software re-configuration of the pinouts of the different package options with respect to above peripherals.

NOTE

The purpose of the module routing register is to provide maximum flexibility for derivatives with a lower number of MSCAN and SPI modules.

Table 24-61. Module Implementations on Derivatives

Number of Modules	MSCAN Modules					SPI Modules		
	CAN0	CAN1	CAN2	CAN3	CAN4	SPI0	SPI1	SPI2
5	yes	yes	yes	yes	yes	—	—	—
4	yes	yes	yes	—	yes	—	—	—
3	yes	yes	—	—	yes	yes	yes	yes
2	yes	—	—	—	yes	yes	yes	—
1	yes	—	—	—	—	yes	—	—

24.0.7 Ports

24.0.7.1 BKGD Pin

The BKGD pin is associated with the S12X_BDM and S12X_EBI modules. During reset, the BKGD pin is used as MODC input.

24.0.7.2 Port A and B

Port A pins PA[7:0] and Port B pins PB[7:0] can be used for either general-purpose I/O.

24.0.7.3 Port E

Port E pins PE[7:2] can be used for either general-purpose I/O or with the alternative functions.

Port E pin PE[7] an be used for either general-purpose I/O or as the free-running clock ECLKX2 output running at the core clock rate. The clock output is always enabled in emulation modes.

Port E pin PE[4] an be used for either general-purpose I/O or as the free-running clock ECLK output running at the bus clock rate or at the programmed divided clock rate. The clock output is always enabled in emulation modes.

Port E pin PE[1] can be used for either general-purpose input or as the level- or falling edge-sensitive $\overline{IRQ}$ interrupt input. $\overline{IRQ}$ will be enabled by setting the IRQEN configuration bit (Section 24.0.5.10, “IRQ Control Register (IRQCR)”) and clearing the I-bit in the CPU’s condition code register. It is inhibited at reset so this pin is initially configured as a simple input with a pull-up.

Port E pin PE[0] can be used for either general-purpose input or as the level-sensitive $\overline{XIRQ}$ interrupt input. $\overline{XIRQ}$ can be enabled by clearing the X-bit in the CPU’s condition code register. It is inhibited at reset so this pin is initially configured as a high-impedance input with a pull-up.

24.0.7.4 Port K

Port K pins PK[7:0] can be used for either general-purpose I/O.

Port K pin PE[7] is configured for reduced input threshold in certain modes (refer to S12X_EBI section).

NOTE

Port K is not available in 80-pin packages.

24.0.7.5 Port T

This port is associated with the ECT module. Port T pins PT[7:0] can be used for either general-purpose I/O, or with the channels of the enhanced capture timer.

24.0.7.6 Port S

This port is associated with SCI0, SCI1 and SPI0. Port S pins PS[7:0] can be used either for general-purpose I/O, or with the SCI and SPI subsystems.

The SPI0 pins can be re-routed. *Refer to Section 24.0.5.33, "Module Routing Register (MODRR)"*.

NOTE

PS[7:4] are not available in 80-pin packages.

24.0.7.7 Port M

This port is associated with the CAN4 and 0 and SPI0. Port M pins PM[7:0] can be used for either general purpose I/O, or with the CAN, SCI and SPI subsystems.

The CAN0, CAN4 and SPI0 pins can be re-routed. *Refer to Section 24.0.5.33, "Module Routing Register (MODRR)"*.

NOTE

PM[7:6] are not available in 80-pin packages.

24.0.7.8 Port P

This port is associated with the PWM, SPI1. Port P pins PP[7:0] can be used for either general purpose I/O, or with the PWM and SPI subsystems.

The pins are shared between the PWM channels and the SPI1. If the PWM is enabled the pins become PWM output channels with the exception of pin 7 which can be PWM input or output. If SPI1is enabled and PWM is disabled, the respective pin configuration is determined by status bits in the SPI.

The SPI1 pins can be re-routed. *Refer to Section 24.0.5.33, "Module Routing Register (MODRR)"*.

Port P offers 8 I/O pins with edge triggered interrupt capability in wired-OR fashion (Section 24.0.8, "Pin Interrupts").

NOTE

PP[6] is not available in 80-pin packages.

24.0.7.9 Port H

This port is associated with the SPI1, . Port H pins PH[7:0] can be used for either general purpose I/O, or with the SPI and SCI subsystems. Port H pins can be used with the routed SPI1. *Refer to Section 24.0.5.33, "Module Routing Register (MODRR)"*.

Port H offers 8 I/O pins with edge triggered interrupt capability (Section 24.0.8, "Pin Interrupts").

NOTE

Port H is not available in 80-pin packages.

24.0.7.10 Port J

This port is associated with CAN4, CAN0, IIC0. Port J pins PJ[7:4] and PJ[2:0] can be used for either general purpose I/O, or with the CAN, IIC, or SCI subsystems. If IIC takes precedence the associated pins become IIC open-drain output pins. The CAN4 pins can be re-routed. *Refer to Section 24.0.5.33, "Module Routing Register (MODRR)"*.

Port J pins can be used with the routed CAN0 modules. *Refer to Section 24.0.5.33, "Module Routing Register (MODRR)"*.

Port J offers 7 I/O pins with edge triggered interrupt capability (Section 24.0.8, "Pin Interrupts").

NOTE

PJ[5,4,2,1,0] are not available in 80-pin packages.

24.0.7.11 Port AD1

This port is associated with the ATD1. Port AD1 pins PAD15–PAD0 can be used for either general purpose I/O, or with the ATD1 subsystem.

NOTE

PAD[15:8] are not available in 80-pin packages.

24.0.8 Pin Interrupts

Ports P, H and J offer pin interrupt capability. The interrupt enable as well as the sensitivity to rising or falling edges can be individually configured on per-pin basis. All bits/pins in a port share the same interrupt vector. Interrupts can be used with the pins configured as inputs or outputs.

An interrupt is generated when a bit in the port interrupt flag register and its corresponding port interrupt enable bit are both set. The pin interrupt feature is also capable to wake up the CPU when it is in STOP or WAIT mode.

A digital filter on each pin prevents pulses (Figure 24-70) shorter than a specified time from generating an interrupt. The minimum time varies over process conditions, temperature and voltage (Figure 24-69 and Table 24-62).

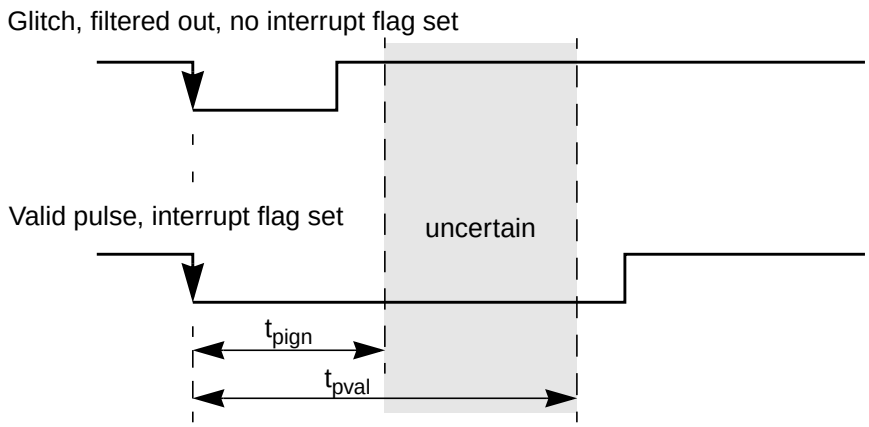

Figure 24-69. Interrupt Glitch Filter on Port P, H, and J (PPS = 0)

Table 24-62. Pulse Detection Criteria

Pulse	Mode		
	$\overline{STOP}$	Unit	STOP[1]
Ignored	$t_{pulse} \leq 3$	Bus clocks	$t_{pulse} \leq t_{pign}$
Uncertain	$3 < t_{pulse} < 4$	Bus clocks	$t_{pign} < t_{pulse} < t_{pval}$
Valid	$t_{pulse} \geq 4$	Bus clocks	$t_{pulse} \geq t_{pval}$

1. These values include the spread of the oscillator frequency over temperature, voltage and process.

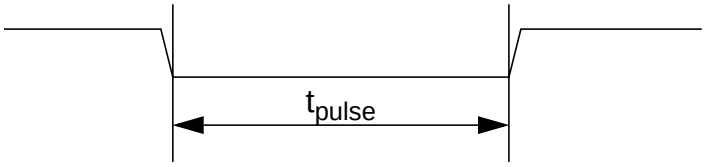

Figure 24-70. Pulse Illustration

A valid edge on an input is detected if 4 consecutive samples of a passive level are followed by 4 consecutive samples of an active level directly or indirectly.

The filters are continuously clocked by the bus clock in run and wait mode. In stop mode, the clock is generated by an RC-oscillator in the port integration module. To maximize current saving the RC oscillator runs only if the following condition is true on any pin individually:

Sample count <= 4 and interrupt enabled (PIE = 1) and interrupt flag not set (PIF = 0).

24.0.9 Low-Power Options

24.0.9.1 Run Mode

No low-power options exist for this module in run mode.

24.0.9.2 Wait Mode

No low-power options exist for this module in wait mode.

24.0.9.3 Stop Mode

All clocks are stopped. There are asynchronous paths to generate interrupts from stop on port P, H, and J.

Initialization and Application Information

- It is not recommended to write PORTx and DDRx in a word access. When changing the register pins from inputs to outputs, the data may have extra transitions during the write access. Initialize the port data register before enabling the outputs.
- Power consumption will increase the more the voltages on general purpose input pins deviate from the supply voltages towards mid-range because the digital input buffers operate in the linear region.

Chapter 25
2 Kbyte EEPROM Module (S12XEETX2KV1)

25.1 Introduction

This document describes the EETX2K module which includes a 2Kbyte EEPROM (nonvolatile) memory. The EEPROM memory may be read as either bytes, aligned words, or misaligned words. Read access time is one bus cycle for bytes and aligned words, and two bus cycles for misaligned words.

The EEPROM memory is ideal for data storage for single-supply applications allowing for field reprogramming without requiring external voltage sources for program or erase. Program and erase functions are controlled by a command driven interface. The EEPROM module supports both block erase (all memory bytes) and sector erase (4 memory bytes). An erased bit reads 1 and a programmed bit reads 0. The high voltage required to program and erase the EEPROM memory is generated internally. It is not possible to read from the EEPROM block while it is being erased or programmed.

CAUTION

An EEPROM word (2 bytes) must be in the erased state before being programmed. Cumulative programming of bits within a word is not allowed.

25.1.1 Glossary

Command Write Sequence — A three-step MCU instruction sequence to execute built-in algorithms (including program and erase) on the EEPROM memory.

25.1.2 Features

- 2 Kbytes of EEPROM memory divided into 512 sectors of 4 bytes
- Automated program and erase algorithm
- Interrupts on EEPROM command completion and command buffer empty
- Fast sector erase and word program operation
- 2-stage command pipeline
- Sector erase abort feature for critical interrupt response
- Flexible protection scheme to prevent accidental program or erase
- Single power supply for all EEPROM operations including program and erase

25.1.3 Modes of Operation

Program, erase and erase verify operations (please refer to Section 25.4.1, “EEPROM Command Operations” for details).

25.1.4 Block Diagram

A block diagram of the EEPROM module is shown in Figure 25-1.

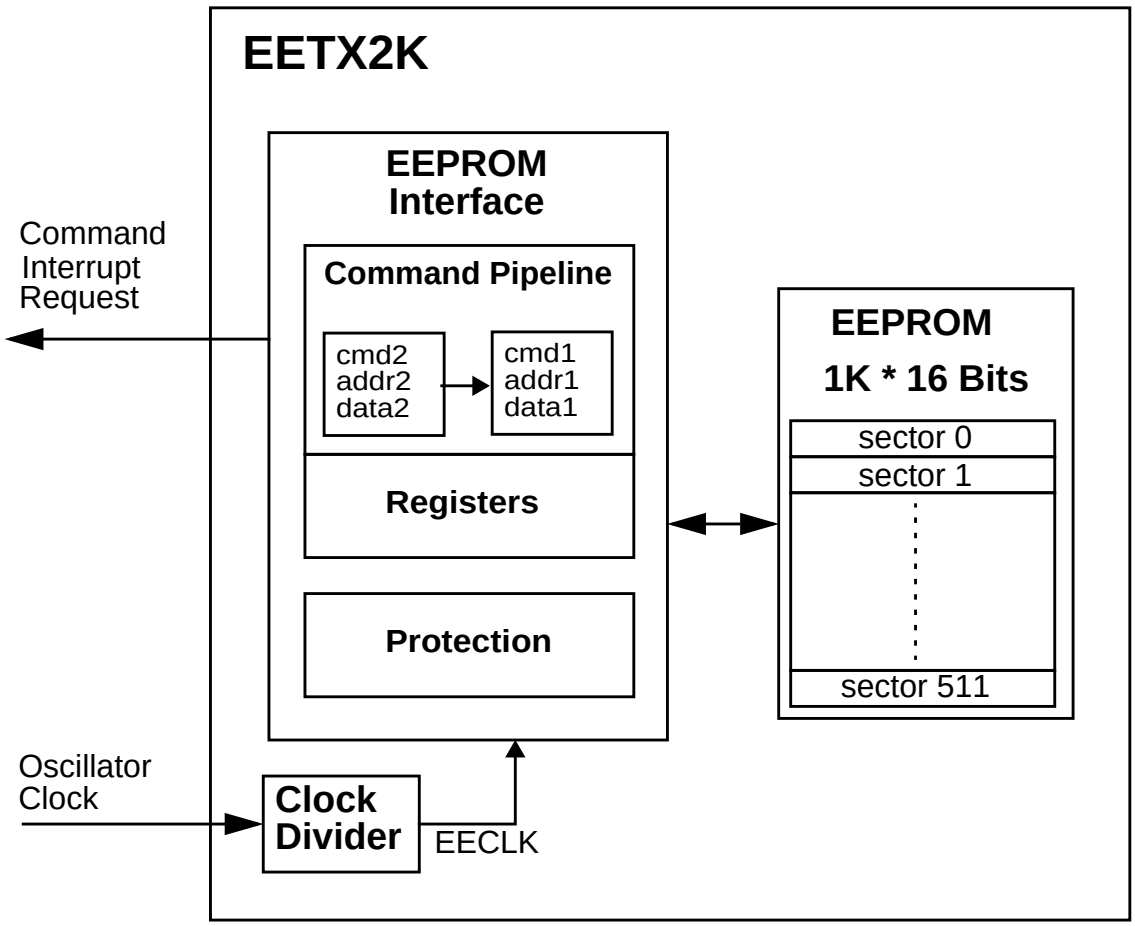

Figure 25-1. EETX2K Block Diagram

25.2 External Signal Description

The EEPROM module contains no signals that connect off-chip.

25.3 Memory Map and Register Definition

This section describes the memory map and registers for the EEPROM module.

25.3.1 Module Memory Map

The EEPROM memory map is shown in Figure 25-2. The HCS12X architecture places the EEPROM memory addresses between global addresses 0x13_F800 and 0x13_FFFF. The EPROT register, described in Section 25.3.2.5, “EEPROM Protection Register (EPROT)”, can be set to protect the upper region in the EEPROM memory from accidental program or erase. The EEPROM addresses covered by this protectable

region are shown in the EEPROM memory map. The default protection setting is stored in the EEPROM configuration field as described in Table 25-1.

Table 25-1. EEPROM Configuration Field

Global Address	Size (bytes)	Description
0x13_FFFC	1	Reserved
0x13_FFFD	1	EEPROM Protection byte Refer to Section 25.3.2.5, “EEPROM Protection Register (EPROT)”
0x13_FFFE – 0x13_FFFF	2	Reserved

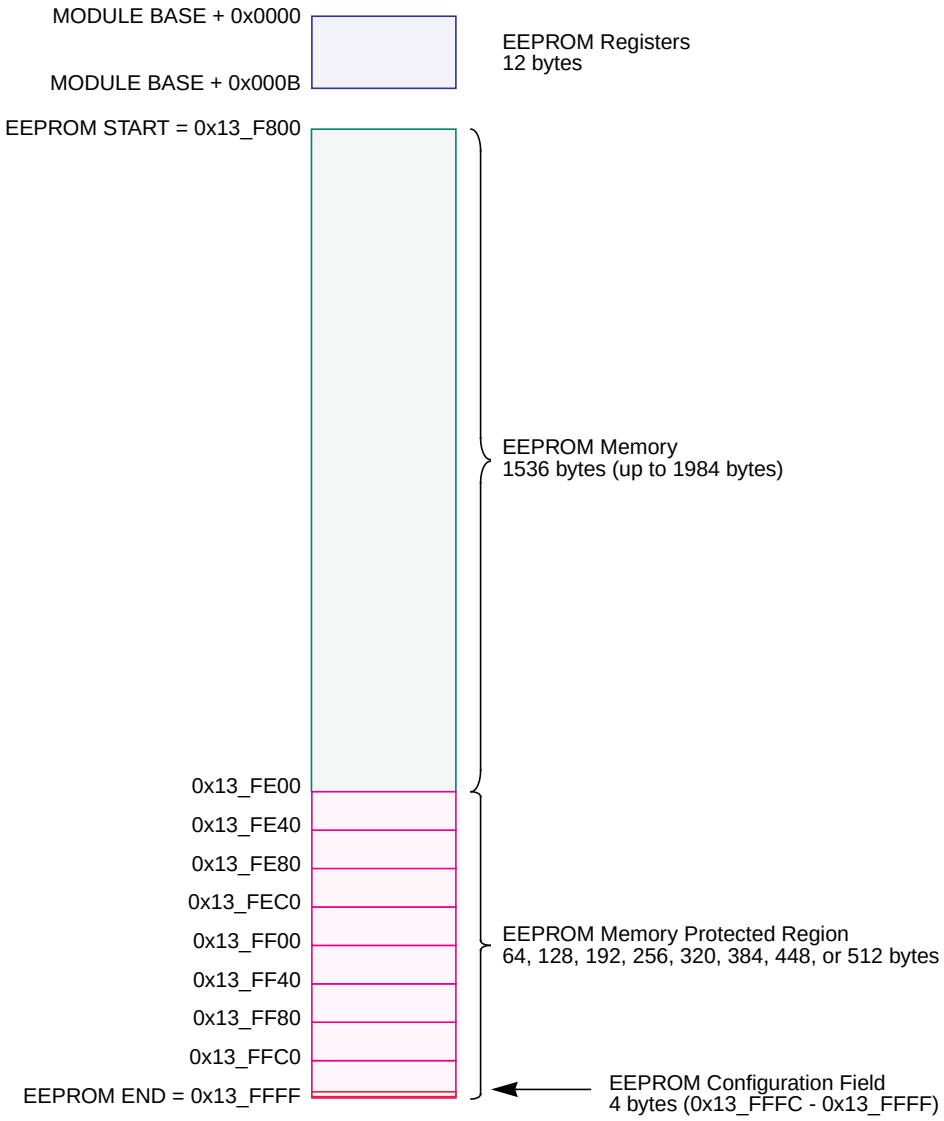

Figure 25-2. EEPROM Memory Map

25.3.2 Register Descriptions

The EEPROM module also contains a set of 12 control and status registers located between EEPROM module base + 0x0000 and 0x000B. A summary of the EEPROM module registers is given in Figure 25-3. Detailed descriptions of each register bit are provided.

Register Name		Bit 7	6	5	4	3	2	1	Bit 0
ECLKDIV	R	EDIVLD	PRDIV8	EDIV5	EDIV4	EDIV3	EDIV2	EDIV1	EDIV0
	W								
RESERVED1	R	0	0	0	0	0	0	0	0
	W								
RESERVED2	R	0	0	0	0	0	0	0	0
	W								
ECNFG	R	CBEIE	CCIE	0	0	0	0	0	0
	W								
EPROT	R	EPOPEN	RNV6	RNV5	RNV4	EPDIS	EPS2	EPS1	EPS0
	W								
ESTAT	R	CBEIF	CCIF	PVIOL	ACCERR	0	BLANK	0	0
	W								
ECMD	R	0	CMDB						
	W								
RESERVED3	R	0	0	0	0	0	0	0	0
	W								
EADDRHI	R	0	0	0	0	0	0	EABHI	
	W								
EADDRLO	R	EABLO							
	W								
EDATAHI	R	EDHI							
	W								
EDATALO	R	EDLO							
	W								

= Unimplemented or Reserved

Figure 25-3. EETX2K Register Summary

25.3.2.1 EEPROM Clock Divider Register (ECLKDIV)

The ECLKDIV register is used to control timed events in program and erase algorithms.

	7	6	5	4	3	2	1	0
R	EDIVLD	PRDIV8	EDIV5	EDIV4	EDIV3	EDIV2	EDIV1	EDIV0
W								
Reset	0	0	0	0	0	0	0	0

= Unimplemented or Reserved

Figure 25-4. EEPROM Clock Divider Register (ECLKDIV)

All bits in the ECLKDIV register are readable, bits 6–0 are write once and bit 7 is not writable.

Table 25-2. ECLKDIV Field Descriptions

Field	Description
7 EDIVLD	**Clock Divider Loaded** 0 Register has not been written. 1 Register has been written to since the last reset.
6 PRDIV8	**Enable Prescalar by 8** 0 The oscillator clock is directly fed into the ECLKDIV divider. 1 Enables a Prescalar by 8, to divide the oscillator clock before feeding into the clock divider.
5:0 EDIV[5:0]	**Clock Divider Bits** — The combination of PRDIV8 and EDIV[5:0] effectively divides the EEPROM module input oscillator clock down to a frequency of 150 kHz – 200 kHz. The maximum divide ratio is 512. Please refer to Section 25.4.1.1, “Writing the ECLKDIV Register” for more information.

25.3.2.2 RESERVED1

This register is reserved for factory testing and is not accessible.

	7	6	5	4	3	2	1	0
R	0	0	0	0	0	0	0	0
W								
Reset	0	0	0	0	0	0	0	0

= Unimplemented or Reserved

Figure 25-5. RESERVED1

All bits read 0 and are not writable.

25.3.2.3 RESERVED2

This register is reserved for factory testing and is not accessible.

	7	6	5	4	3	2	1	0
R	0	0	0	0	0	0	0	0
W								
Reset	0	0	0	0	0	0	0	0

= Unimplemented or Reserved

Figure 25-6. RESERVED2

All bits read 0 and are not writable.

25.3.2.4 EEPROM Configuration Register (ECNFG)

The ECNFG register enables the EEPROM interrupts.

	7	6	5	4	3	2	1	0
R	CBEIE	CCIE	0	0	0	0	0	0
W								
Reset	0	0	0	0	0	0	0	0

= Unimplemented or Reserved

Figure 25-7. EEPROM Configuration Register (ECNFG)

CBEIE and CCIE bits are readable and writable while all remaining bits read 0 and are not writable.

Table 25-3. ECNFG Field Descriptions

Field	Description
7 CBEIE	**Command Buffer Empty Interrupt Enable** — The CBEIE bit enables an interrupt in case of an empty command buffer in the EEPROM module. 0 Command Buffer Empty interrupt disabled. 1 An interrupt will be requested whenever the CBEIF flag (see Section 25.3.2.6, “EEPROM Status Register (ESTAT)”) is set.
6 CCIE	**Command Complete Interrupt Enable** — The CCIE bit enables an interrupt in case all commands have been completed in the EEPROM module. 0 Command Complete interrupt disabled. 1 An interrupt will be requested whenever the CCIF flag (see Section 25.3.2.6, “EEPROM Status Register (ESTAT)”) is set.

25.3.2.5 EEPROM Protection Register (EPROT)

The EPROT register defines which EEPROM sectors are protected against program or erase operations.

	7	6	5	4	3	2	1	0
R	EPOPEN	RNV6	RNV5	RNV4	EPDIS	EPS2	EPS1	EPS0
W								
Reset	F	F	F	F	F	F	F	F

= Unimplemented or Reserved

Figure 25-8. EEPROM Protection Register (EPROT)

During the reset sequence, the EPROT register is loaded from the EEPROM Protection byte at address offset 0x0FFD (see Table 25-1).All bits in the EPROT register are readable and writable except for RNV[6:4] which are only readable. The EPOPEN and EPDIS bits can only be written to the protected state. The EPS bits can be written anytime until bit EPDIS is cleared. If the EPOPEN bit is cleared, the state of the EPDIS and EPS bits is irrelevant.

To change the EEPROM protection that will be loaded during the reset sequence, the EEPROM memory must be unprotected, then the EEPROM Protection byte must be reprogrammed. Trying to alter data in any protected area in the EEPROM memory will result in a protection violation error and the PVIOL flag will be set in the ESTAT register. The mass erase of an EEPROM block is possible only when protection is fully disabled by setting the EPOPEN and EPDIS bits.

Table 25-4. EPROT Field Descriptions

Field	Description
7 EPOPEN	**Opens the EEPROM for Program or Erase** 0 The entire EEPROM memory is protected from program and erase. 1 The EEPROM sectors not protected are enabled for program or erase.
6:4 RNV[6:4]	**Reserved Nonvolatile Bits** — The RNV[6:4] bits should remain in the erased state “1” for future enhancements.
3 EPDIS	**EEPROM Protection Address Range Disable** — The EPDIS bit determines whether there is a protected area in a specific region of the EEPROM memory ending with address offset 0x0FFF. 0 Protection enabled. 1 Protection disabled.
2:0 EPS[2:0]	**EEPROM Protection Address Size** — The EPS[2:0] bits determine the size of the protected area as shown inTable 25-5. The EPS bits can only be written to while the EPDIS bit is set.

Table 25-5. EEPROM Protection Address Range

EPS[2:0]	Address Offset Range	Protected Size
000	0x0FC0 – 0x0FFF	64 bytes
001	0x0F80 – 0x0FFF	128 bytes
010	0x0F40 – 0x0FFF	192 bytes
011	0x0F00 – 0x0FFF	256 bytes
100	0x0EC0 – 0x0FFF	320 bytes
101	0x0E80 – 0x0FFF	384 bytes
110	0x0E40 – 0x0FFF	448 bytes
111	0x0E00 – 0x0FFF	512 bytes

25.3.2.6 EEPROM Status Register (ESTAT)

The ESTAT register defines the operational status of the module.

	7	6	5	4	3	2	1	0
R	CBEIF	CCIF	PVIOL	ACCERR	0	BLANK	0	0
W								
Reset	1	1	0	0	0	0	0	0

= Unimplemented or Reserved

Figure 25-9. EEPROM Status Register (ESTAT — Normal Mode)

	7	6	5	4	3	2	1	0
R	CBEIF	CCIF	PVIOL	ACCERR	0	BLANK	FAIL	0
W								
Reset	1	1	0	0	0	0	0	0

= Unimplemented or Reserved

Figure 25-10. EEPROM Status Register (ESTAT — Special Mode)

CBEIF, PVIOL, and ACCERR are readable and writable, CCIF and BLANK are readable and not writable, remaining bits read 0 and are not writable in normal mode. FAIL is readable and writable in special mode.

Table 25-6. ESTAT Field Descriptions

Field	Description
7 CBEIF	**Command Buffer Empty Interrupt Flag** — The CBEIF flag indicates that the address, data, and command buffers are empty so that a new command write sequence can be started. The CBEIF flag is cleared by writing a 1 to CBEIF. Writing a 0 to the CBEIF flag has no effect on CBEIF. Writing a 0 to CBEIF after writing an aligned word to the EEPROM address space but before CBEIF is cleared will abort a command write sequence and cause the ACCERR flag to be set. Writing a 0 to CBEIF outside of a command write sequence will not set the ACCERR flag. The CBEIF flag is used together with the CBEIE bit in the ECNFG register to generate an interrupt request (see Figure 25-24). 0 Buffers are full. 1 Buffers are ready to accept a new command.
6 CCIF	**Command Complete Interrupt Flag** — The CCIF flag indicates that there are no more commands pending. The CCIF flag is cleared when CBEIF is clear and sets automatically upon completion of all active and pending commands. The CCIF flag does not set when an active commands completes and a pending command is fetched from the command buffer. Writing to the CCIF flag has no effect on CCIF. The CCIF flag is used together with the CCIE bit in the ECNFG register to generate an interrupt request (see Figure 25-24). 0 Command in progress. 1 All commands are completed.
5 PVIOL	**Protection Violation Flag** — The PVIOL flag indicates an attempt was made to program or erase an address in a protected area of the EEPROM memory during a command write sequence. The PVIOL flag is cleared by writing a 1 to PVIOL. Writing a 0 to the PVIOL flag has no effect on PVIOL. While PVIOL is set, it is not possible to launch a command or start a command write sequence. 0 No failure. 1 A protection violation has occurred.
4 ACCERR	**Access Error Flag** — The ACCERR flag indicates an illegal access has occurred to the EEPROM memory caused by either a violation of the command write sequence (see Section 25.4.1.2, “Command Write Sequence”), issuing an illegal EEPROM command (see Table 25-8), launching the sector erase abort command terminating a sector erase operation early (see Section 25.4.2.5, “Sector Erase Abort Command”) or the execution of a CPU STOP instruction while a command is executing (CCIF = 0). The ACCERR flag is cleared by writing a 1 to ACCERR. Writing a 0 to the ACCERR flag has no effect on ACCERR. While ACCERR is set, it is not possible to launch a command or start a command write sequence. If ACCERR is set by an erase verify operation, any buffered command will not launch. 0 No access error detected. 1 Access error has occurred.
2 BLANK	**Flag Indicating the Erase Verify Operation Status** — When the CCIF flag is set after completion of an erase verify command, the BLANK flag indicates the result of the erase verify operation. The BLANK flag is cleared by the EEPROM module when CBEIF is cleared as part of a new valid command write sequence. Writing to the BLANK flag has no effect on BLANK. 0 EEPROM block verified as not erased. 1 EEPROM block verified as erased.
1 FAIL	**Flag Indicating a Failed EEPROM Operation** — The FAIL flag will set if the erase verify operation fails (EEPROM block verified as not erased). The FAIL flag is cleared by writing a 1 to FAIL. Writing a 0 to the FAIL flag has no effect on FAIL. 0 EEPROM operation completed without error. 1 EEPROM operation failed.

25.3.2.7 EEPROM Command Register (ECMD)

The ECMD register is the EEPROM command register.

	7	6	5	4	3	2	1	0
R	0	CMDB						
W								
Reset	0	0	0	0	0	0	0	0

= Unimplemented or Reserved

Figure 25-11. EEPROM Command Register (ECMD)

All CMDB bits are readable and writable during a command write sequence while bit 7 reads 0 and is not writable.

Table 25-7. ECMD Field Descriptions

Field	Description
6:0 CMDB[6:0]	**EEPROM Command Bits** — Valid EEPROM commands are shown in Table 25-8. Writing any command other than those listed in Table 25-8 sets the ACCERR flag in the ESTAT register.

Table 25-8. Valid EEPROM Command List

CMDB[6:0]	Command
0x05	Erase Verify
0x20	Word Program
0x40	Sector Erase
0x41	Mass Erase
0x47	Sector Erase Abort
0x60	Sector Modify

25.3.2.8 RESERVED3

This register is reserved for factory testing and is not accessible.

	7	6	5	4	3	2	1	0
R	0	0	0	0	0	0	0	0
W								
Reset	0	0	0	0	0	0	0	0

= Unimplemented or Reserved

Figure 25-12. RESERVED3

All bits read 0 and are not writable.

EEPROM Address Registers (EADDR)

The EADDRHI and EADDRLO registers are the EEPROM address registers.

	7	6	5	4	3	2	1	0
R	0	0	0	0	0	0	EABHI	
W								
Reset	0	0	0	0	0	0	0	0

= Unimplemented or Reserved

Figure 25-13. EEPROM Address High Register (EADDRHI)

	7	6	5	4	3	2	1	0
R	EABLO							
W								
Reset	0	0	0	0	0	0	0	0

= Unimplemented or Reserved

Figure 25-14. EEPROM Address Low Register (EADDRLO)

All EABHI and EABLO bits read 0 and are not writable in normal modes.

All EABHI and EABLO bits are readable and writable in special modes.

The MCU address bit AB0 is not stored in the EADDR registers since the EEPROM block is not byte addressable.

25.3.2.9 EEPROM Data Registers (EDATA)

The EDATAHI and EDATALO registers are the EEPROM data registers.

	7	6	5	4	3	2	1	0
R	EDHI							
W								
Reset	0	0	0	0	0	0	0	0

= Unimplemented or Reserved

Figure 25-15. EEPROM Data High Register (EDATAHI)

	7	6	5	4	3	2	1	0
R	EDLO							
W								
Reset	0	0	0	0	0	0	0	0

= Unimplemented or Reserved

Figure 25-16. EEPROM Data Low Register (EDATALO)

All EDHI and EDLO bits read 0 and are not writable in normal modes.

All EDHI and EDLO bits are readable and writable in special modes.

25.4 Functional Description

25.4.1 EEPROM Command Operations

Write operations are used to execute program, erase, erase verify, sector erase abort, and sector modify algorithms described in this section. The program, erase, and sector modify algorithms are controlled by a state machine whose timebase, EECLK, is derived from the oscillator clock via a programmable divider. The command register as well as the associated address and data registers operate as a buffer and a register (2-stage FIFO) so that a second command along with the necessary data and address can be stored to the buffer while the first command is still in progress. Buffer empty as well as command completion are signalled by flags in the EEPROM status register with interrupts generated, if enabled.

The next sections describe:

1. How to write the ECLKDIV register
2. Command write sequences to program, erase, erase verify, sector erase abort, and sector modify operations on the EEPROM memory
3. Valid EEPROM commands
4. Effects resulting from illegal EEPROM command write sequences or aborting EEPROM operations

25.4.1.1 Writing the ECLKDIV Register

Prior to issuing any EEPROM command after a reset, the user is required to write the ECLKDIV register to divide the oscillator clock down to within the 150 kHz to 200 kHz range. Since the program and erase timings are also a function of the bus clock, the ECLKDIV determination must take this information into account.

If we define:

- ECLK as the clock of the EEPROM timing control block
- Tbus as the period of the bus clock
- INT(x) as taking the integer part of x (e.g., INT(4.323)=4)

then ECLKDIV register bits PRDIV8 and EDIV[5:0] are to be set as described in Figure 25-17.

For example, if the oscillator clock frequency is 950 kHz and the bus clock frequency is 10 MHz, ECLKDIV bits EDIV[5:0] should be set to 0x04 (000100) and bit PRDIV8 set to 0. The resulting EECLK frequency is then 190 kHz. As a result, the EEPROM program and erase algorithm timings are increased over the optimum target by:

$$(200 - 190)/200 \times 100 = 5\%$$

If the oscillator clock frequency is 16 MHz and the bus clock frequency is 40 MHz, ECLKDIV bits EDIV[5:0] should be set to 0x0A (001010) and bit PRDIV8 set to 1. The resulting EECLK frequency is

then 182 kHz. In this case, the EEPROM program and erase algorithm timings are increased over the optimum target by:

$$(200 - 182)/200 \times 100 = 9\%$$

CAUTION

Program and erase command execution time will increase proportionally with the period of EECLK. Because of the impact of clock synchronization on the accuracy of the functional timings, programming or erasing the EEPROM memory cannot be performed if the bus clock runs at less than 1 MHz. Programming or erasing the EEPROM memory with EECLK < 150 kHz should be avoided. Setting ECLKDIV to a value such that EECLK < 150 kHz can destroy the EEPROM memory due to overstress. Setting ECLKDIV to a value such that (1/EECLK+Tbus) < 5 µs can result in incomplete programming or erasure of the EEPROM memory cells.

If the ECLKDIV register is written, the EDIVLD bit is set automatically. If the EDIVLD bit is 0, the ECLKDIV register has not been written since the last reset. If the ECLKDIV register has not been written to, the EEPROM command loaded during a command write sequence will not execute and the ACCERR flag in the ESTAT register will set.

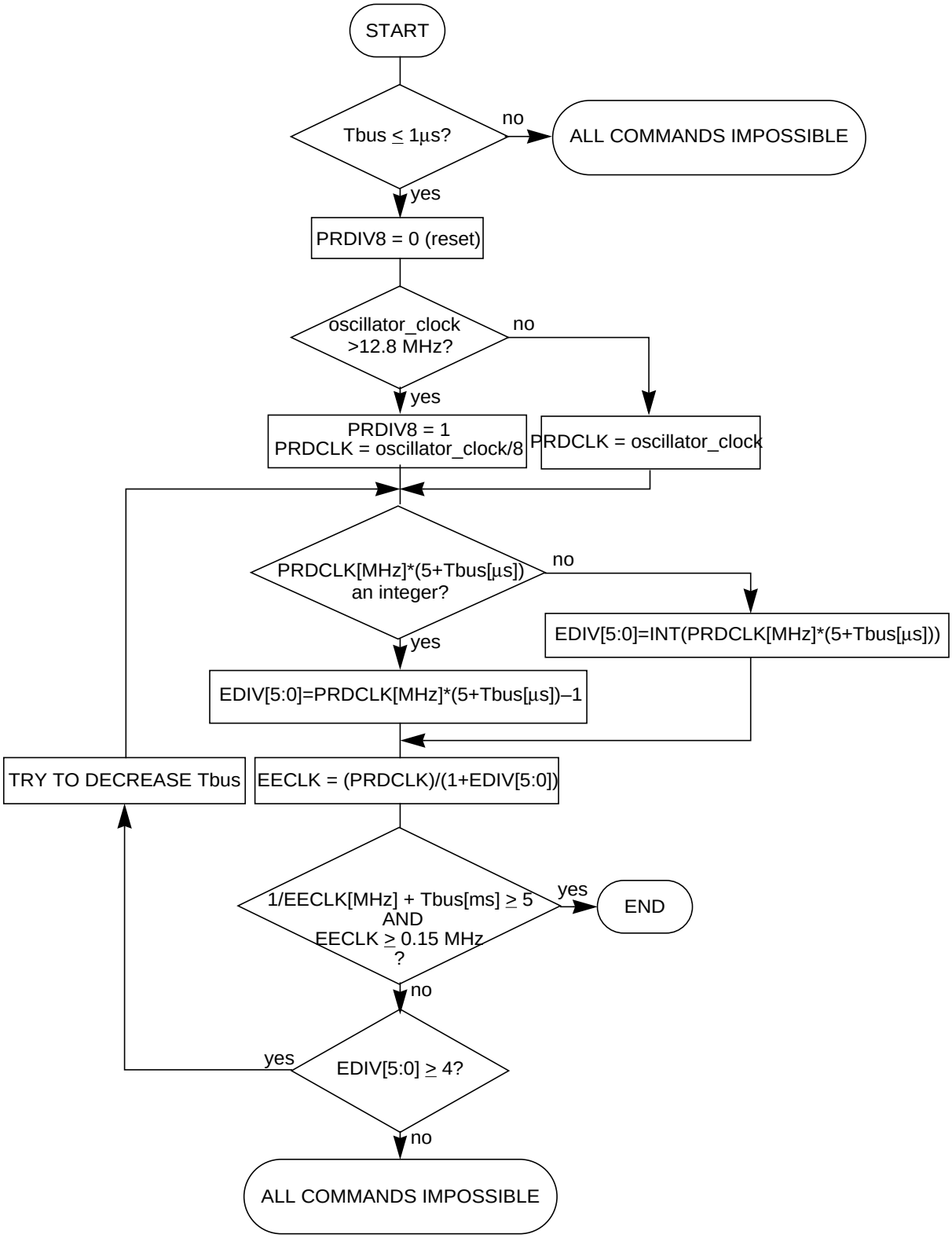

Figure 25-17. Determination Procedure for PRDIV8 and EDIV Bits

25.4.1.2 Command Write Sequence

The EEPROM command controller is used to supervise the command write sequence to execute program, erase, erase verify, sector erase abort, and sector modify algorithms.

Before starting a command write sequence, the ACCERR and PVIOL flags in the ESTAT register must be clear (see Section 25.3.2.6, "EEPROM Status Register (ESTAT)") and the CBEIF flag should be tested to determine the state of the address, data and command buffers. If the CBEIF flag is set, indicating the buffers are empty, a new command write sequence can be started. If the CBEIF flag is clear, indicating the buffers are not available, a new command write sequence will overwrite the contents of the address, data and command buffers.

A command write sequence consists of three steps which must be strictly adhered to with writes to the EEPROM module not permitted between the steps. However, EEPROM register and array reads are allowed during a command write sequence. The basic command write sequence is as follows:

1. Write to one address in the EEPROM memory.
2. Write a valid command to the ECMD register.
3. Clear the CBEIF flag in the ESTAT register by writing a 1 to CBEIF to launch the command.

The address written in step 1 will be stored in the EADDR registers and the data will be stored in the EDATA registers. If the CBEIF flag in the ESTAT register is clear when the first EEPROM array write occurs, the contents of the address and data buffers will be overwritten and the CBEIF flag will be set. When the CBEIF flag is cleared, the CCIF flag is cleared on the same bus cycle by the EEPROM command controller indicating that the command was successfully launched. For all command write sequences except sector erase abort, the CBEIF flag will set four bus cycles after the CCIF flag is cleared indicating that the address, data, and command buffers are ready for a new command write sequence to begin. For sector erase abort operations, the CBEIF flag will remain clear until the operation completes. Except for the sector erase abort command, a buffered command will wait for the active operation to be completed before being launched. The sector erase abort command is launched when the CBEIF flag is cleared as part of a sector erase abort command write sequence. Once a command is launched, the completion of the command operation is indicated by the setting of the CCIF flag in the ESTAT register. The CCIF flag will set upon completion of all active and buffered commands.

25.4.2 EEPROM Commands

Table 25-9 summarizes the valid EEPROM commands along with the effects of the commands on the EEPROM block.

Table 25-9. EEPROM Command Description

ECMDB	Command	Function on EEPROM Memory
0x05	Erase Verify	Verify all memory bytes in the EEPROM block are erased. If the EEPROM block is erased, the BLANK flag in the ESTAT register will set upon command completion.
0x20	Program	Program a word (two bytes) in the EEPROM block.
0x40	Sector Erase	Erase all four memory bytes in a sector of the EEPROM block.

Table 25-9. EEPROM Command Description

ECMDB	Command	Function on EEPROM Memory
0x41	Mass Erase	Erase all memory bytes in the EEPROM block. A mass erase of the full EEPROM block is only possible when EPOPEN and EPDIS bits in the EPROT register are set prior to launching the command.
0x47	Sector Erase Abort	Abort the sector erase operation. The sector erase operation will terminate according to a set procedure. The EEPROM sector should not be considered erased if the ACCERR flag is set upon command completion.
0x60	Sector Modify	Erase all four memory bytes in a sector of the EEPROM block and reprogram the addressed word.

CAUTION

An EEPROM word (2 bytes) must be in the erased state before being programmed. Cumulative programming of bits within a word is not allowed.

25.4.2.1 Erase Verify Command

The erase verify operation will verify that the EEPROM memory is erased.

An example flow to execute the erase verify operation is shown in Figure 25-18. The erase verify command write sequence is as follows:

1. Write to an EEPROM address to start the command write sequence for the erase verify command. The address and data written will be ignored.
2. Write the erase verify command, 0x05, to the ECMD register.
3. Clear the CBEIF flag in the ESTAT register by writing a 1 to CBEIF to launch the erase verify command.

After launching the erase verify command, the CCIF flag in the ESTAT register will set after the operation has completed unless a new command write sequence has been buffered. The number of bus cycles required to execute the erase verify operation is equal to the number of words in the EEPROM memory plus 14 bus cycles as measured from the time the CBEIF flag is cleared until the CCIF flag is set. Upon completion of the erase verify operation, the BLANK flag in the ESTAT register will be set if all addresses in the EEPROM memory are verified to be erased. If any address in the EEPROM memory is not erased, the erase verify operation will terminate and the BLANK flag in the ESTAT register will remain clear.

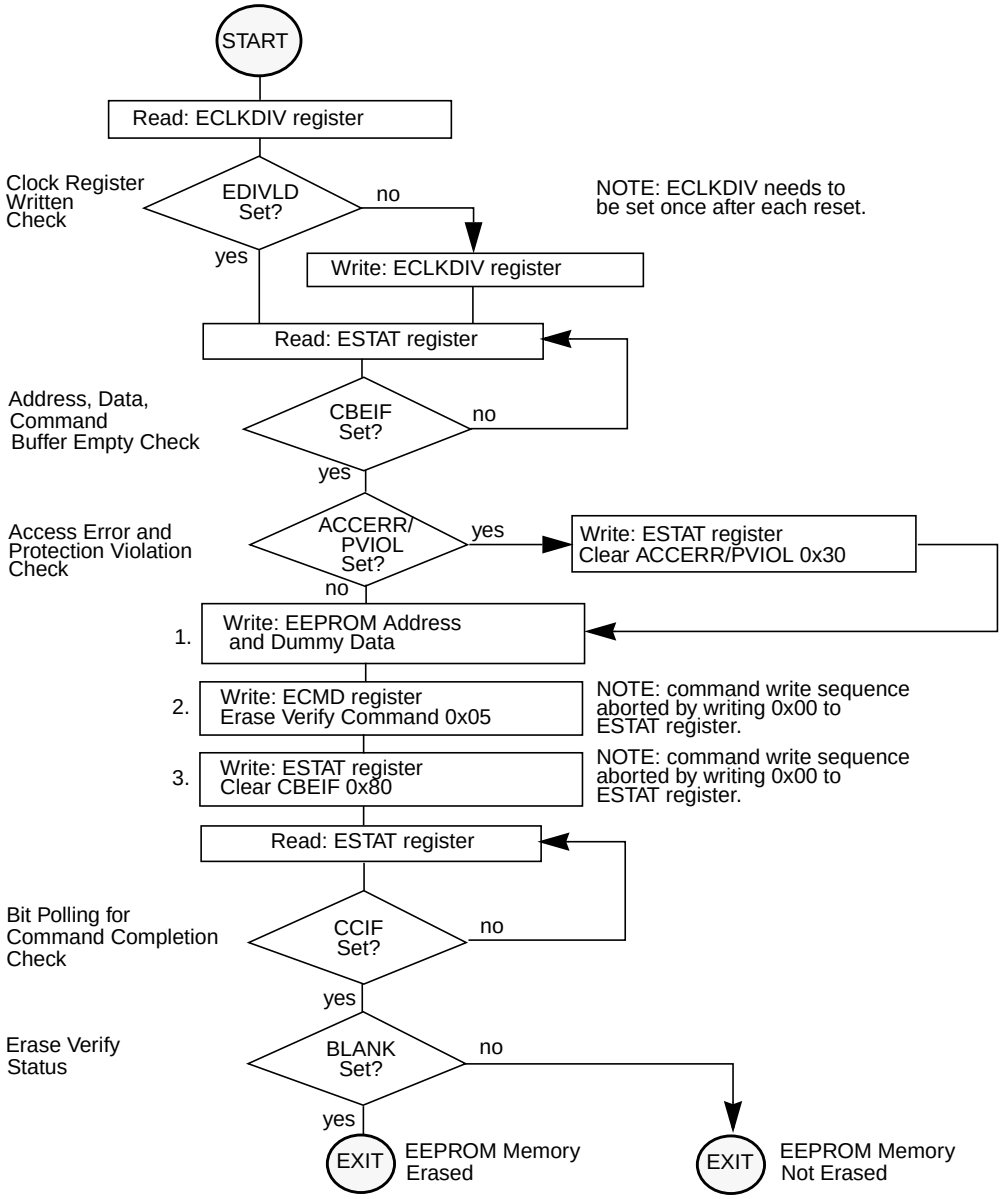

Figure 25-18. Example Erase Verify Command Flow

25.4.2.2 Program Command

The program operation will program a previously erased word in the EEPROM memory using an embedded algorithm.

An example flow to execute the program operation is shown in Figure 25-19. The program command write sequence is as follows:

1. Write to an EEPROM block address to start the command write sequence for the program command. The data written will be programmed to the address written.
2. Write the program command, 0x20, to the ECMD register.
3. Clear the CBEIF flag in the ESTAT register by writing a 1 to CBEIF to launch the program command.

If a word to be programmed is in a protected area of the EEPROM memory, the PVIOL flag in the ESTAT register will set and the program command will not launch. Once the program command has successfully launched, the CCIF flag in the ESTAT register will set after the program operation has completed unless a new command write sequence has been buffered.

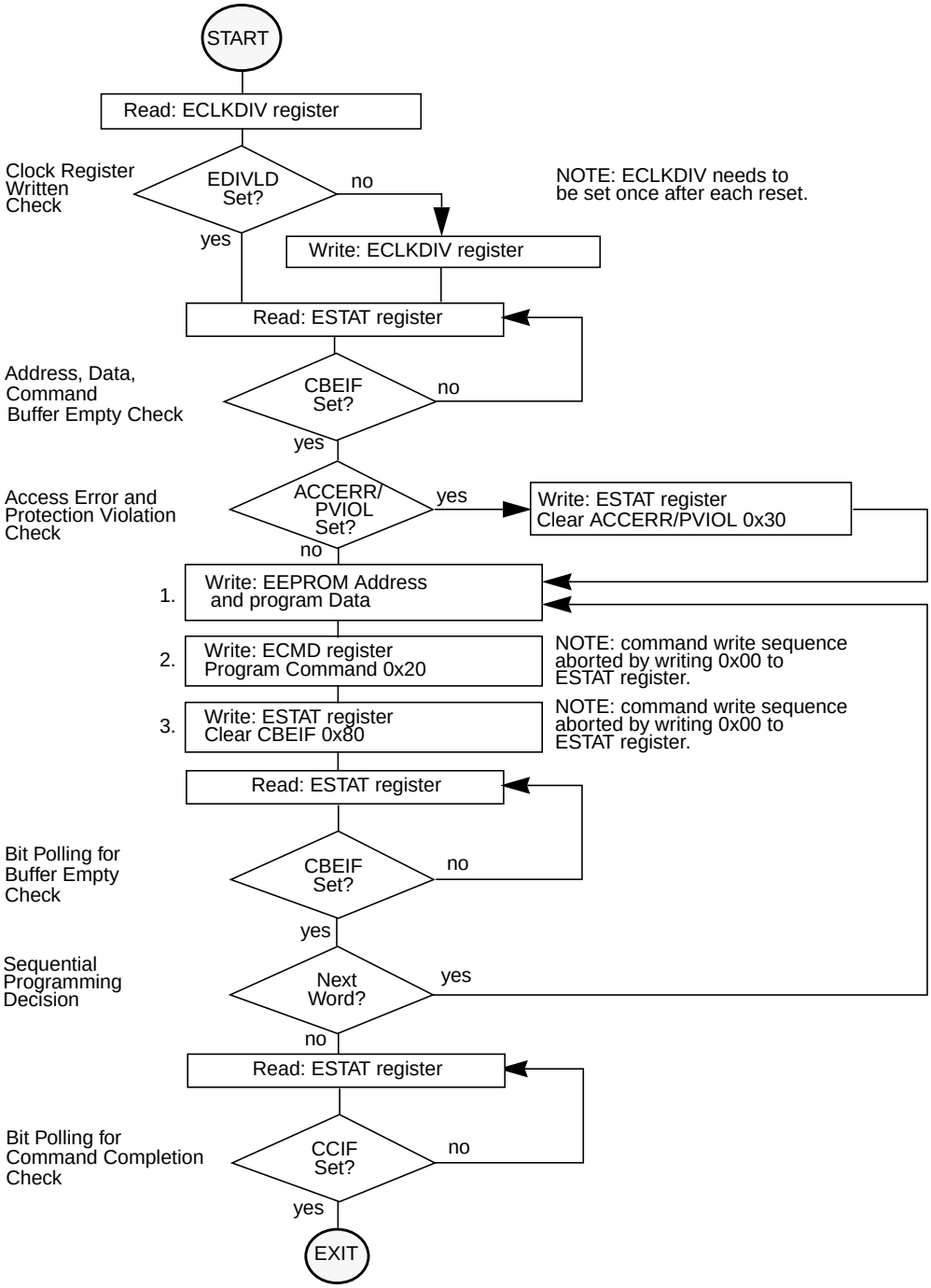

Figure 25-19. Example Program Command Flow

25.4.2.3 Sector Erase Command

The sector erase operation will erase both words in a sector of EEPROM memory using an embedded algorithm.

An example flow to execute the sector erase operation is shown in Figure 25-20. The sector erase command write sequence is as follows:

1. Write to an EEPROM memory address to start the command write sequence for the sector erase command. The EEPROM address written determines the sector to be erased while global address bits [1:0] and the data written are ignored.
2. Write the sector erase command, 0x40, to the ECMD register.
3. Clear the CBEIF flag in the ESTAT register by writing a 1 to CBEIF to launch the sector erase command.

If an EEPROM sector to be erased is in a protected area of the EEPROM memory, the PVIOL flag in the ESTAT register will set and the sector erase command will not launch. Once the sector erase command has successfully launched, the CCIF flag in the ESTAT register will set after the sector erase operation has completed unless a new command write sequence has been buffered.

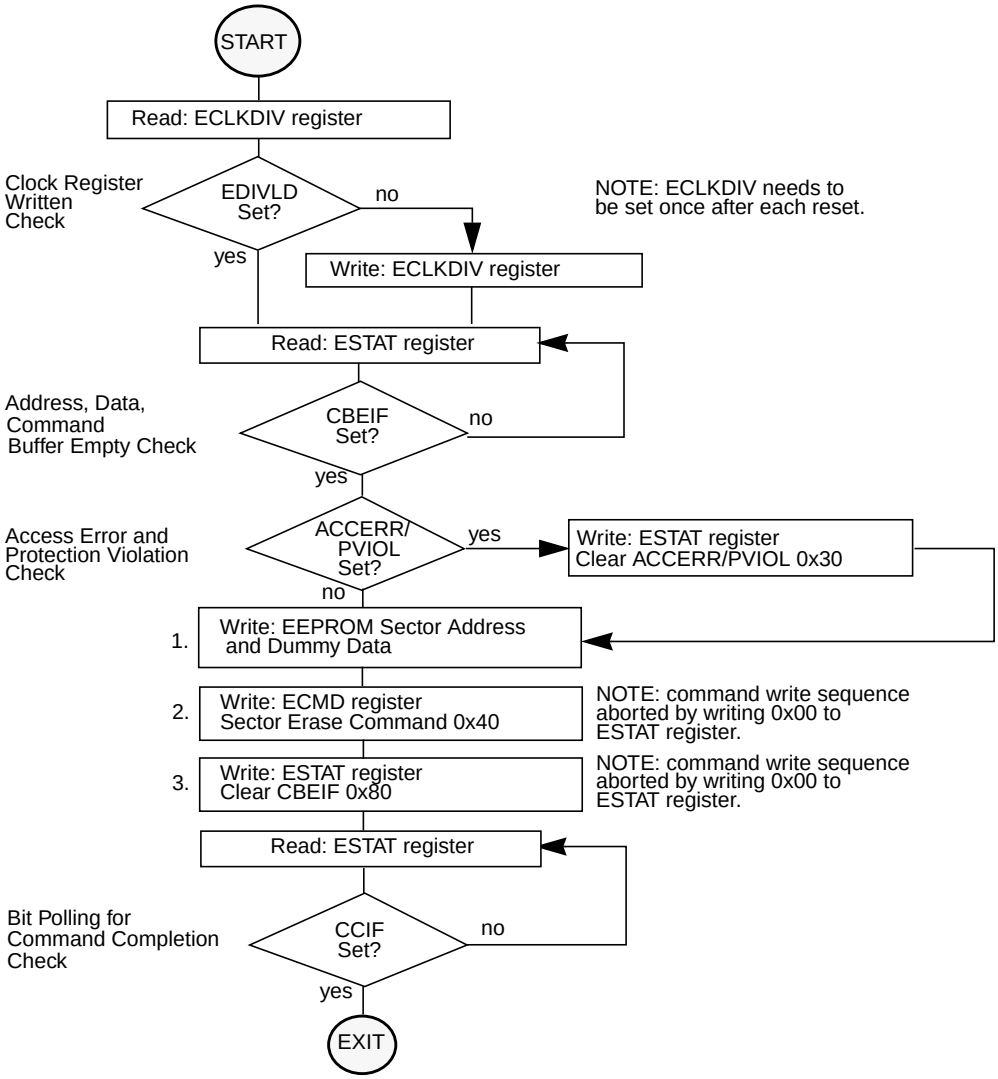

Figure 25-20. Example Sector Erase Command Flow

25.4.2.4 Mass Erase Command

The mass erase operation will erase all addresses in an EEPROM block using an embedded algorithm.

An example flow to execute the mass erase operation is shown in Figure 25-21. The mass erase command write sequence is as follows:

1. Write to an EEPROM memory address to start the command write sequence for the mass erase command. The address and data written will be ignored.
2. Write the mass erase command, 0x41, to the ECMD register.
3. Clear the CBEIF flag in the ESTAT register by writing a 1 to CBEIF to launch the mass erase command.

If the EEPROM memory to be erased contains any protected area, the PVIOL flag in the ESTAT register will set and the mass erase command will not launch. Once the mass erase command has successfully launched, the CCIF flag in the ESTAT register will set after the mass erase operation has completed unless a new command write sequence has been buffered.

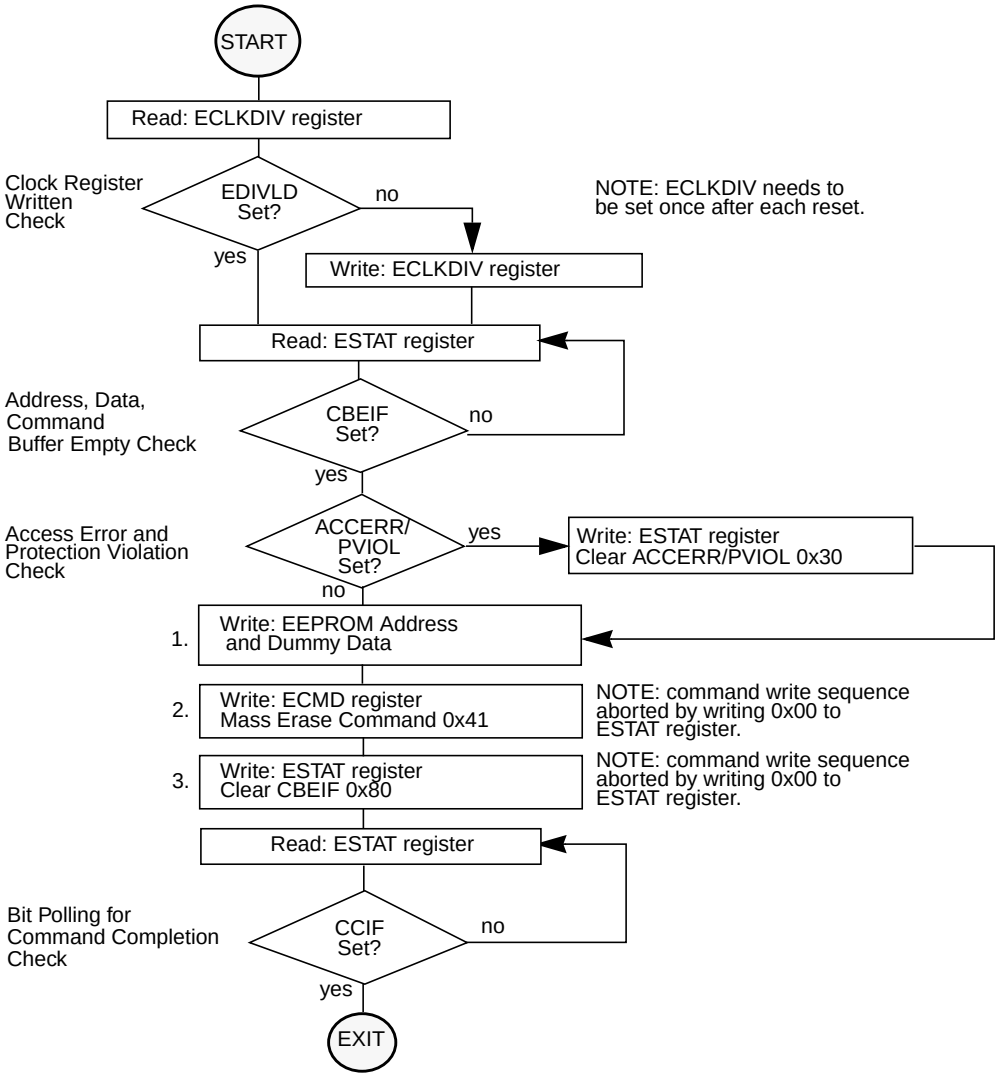

Figure 25-21. Example Mass Erase Command Flow

25.4.2.5 Sector Erase Abort Command

The sector erase abort operation will terminate the active sector erase or sector modify operation so that other sectors in an EEPROM block are available for read and program operations without waiting for the sector erase or sector modify operation to complete.

An example flow to execute the sector erase abort operation is shown in Figure 25-22. The sector erase abort command write sequence is as follows:

1. Write to any EEPROM memory address to start the command write sequence for the sector erase abort command. The address and data written are ignored.
2. Write the sector erase abort command, 0x47, to the ECMD register.
3. Clear the CBEIF flag in the ESTAT register by writing a 1 to CBEIF to launch the sector erase abort command.

If the sector erase abort command is launched resulting in the early termination of an active sector erase or sector modify operation, the ACCERR flag will set once the operation completes as indicated by the CCIF flag being set. The ACCERR flag sets to inform the user that the EEPROM sector may not be fully erased and a new sector erase or sector modify command must be launched before programming any location in that specific sector. If the sector erase abort command is launched but the active sector erase or sector modify operation completes normally, the ACCERR flag will not set upon completion of the operation as indicated by the CCIF flag being set. If the sector erase abort command is launched after the sector modify operation has completed the sector erase step, the program step will be allowed to complete. The maximum number of cycles required to abort a sector erase or sector modify operation is equal to four EECLK periods (see Section 25.4.1.1, “Writing the ECLKDIV Register”) plus five bus cycles as measured from the time the CBEIF flag is cleared until the CCIF flag is set.

NOTE

Since the ACCERR bit in the ESTAT register may be set at the completion of the sector erase abort operation, a command write sequence is not allowed to be buffered behind a sector erase abort command write sequence. The CBEIF flag will not set after launching the sector erase abort command to indicate that a command should not be buffered behind it. If an attempt is made to start a new command write sequence with a sector erase abort operation active, the ACCERR flag in the ESTAT register will be set. A new command write sequence may be started after clearing the ACCERR flag, if set.

NOTE

The sector erase abort command should be used sparingly since a sector erase operation that is aborted counts as a complete program/erase cycle.

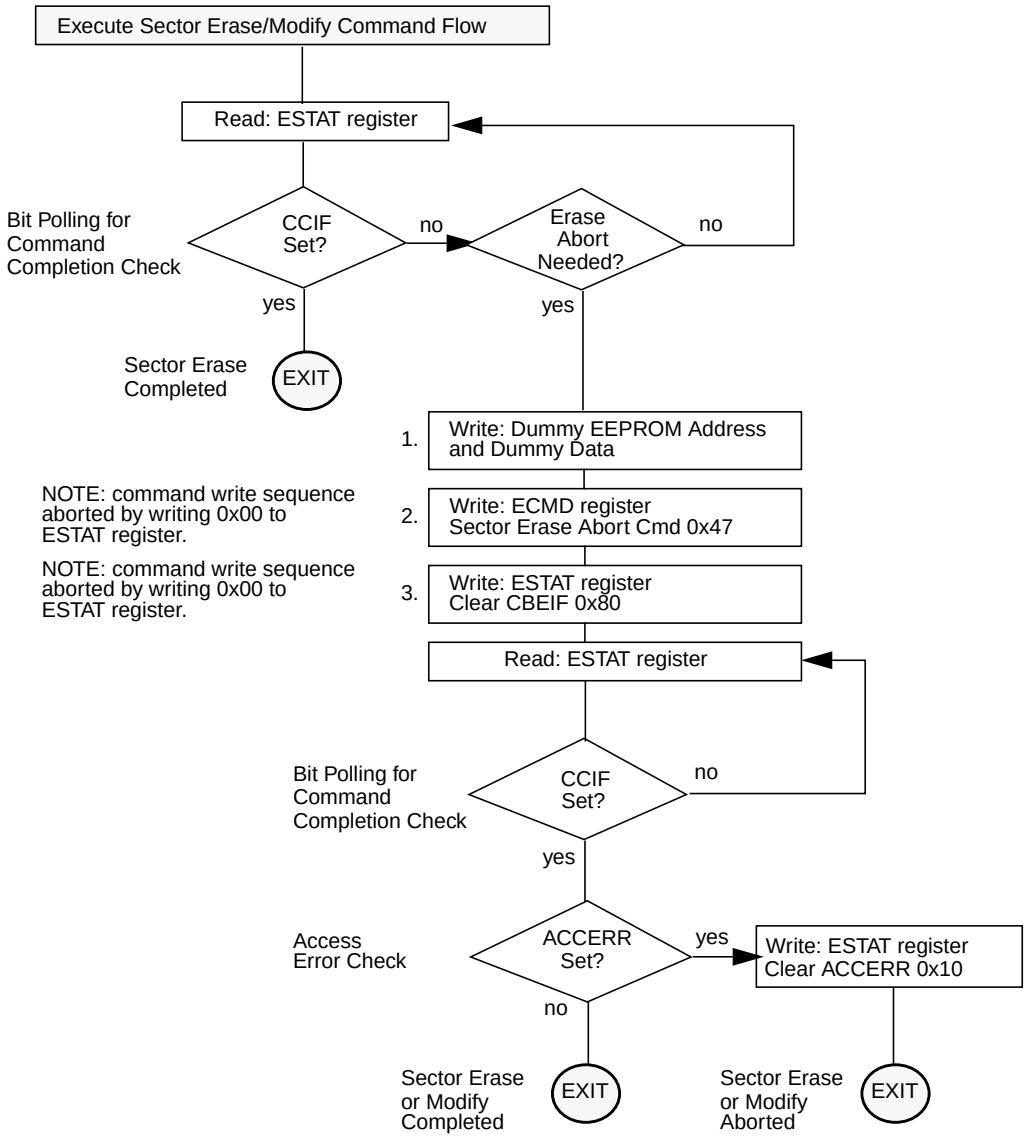

Figure 25-22. Example Sector Erase Abort Command Flow

25.4.2.6 Sector Modify Command

The sector modify operation will erase both words in a sector of EEPROM memory followed by a reprogram of the addressed word using an embedded algorithm.

An example flow to execute the sector modify operation is shown in Figure 25-23. The sector modify command write sequence is as follows:

1. Write to an EEPROM memory address to start the command write sequence for the sector modify command. The EEPROM address written determines the sector to be erased and word to be reprogrammed while byte address bit 0 is ignored.
2. Write the sector modify command, 0x60, to the ECMD register.
3. Clear the CBEIF flag in the ESTAT register by writing a 1 to CBEIF to launch the sector erase command.

If an EEPROM sector to be modified is in a protected area of the EEPROM memory, the PVIOL flag in the ESTAT register will set and the sector modify command will not launch. Once the sector modify command has successfully launched, the CCIF flag in the ESTAT register will set after the sector modify operation has completed unless a new command write sequence has been buffered.

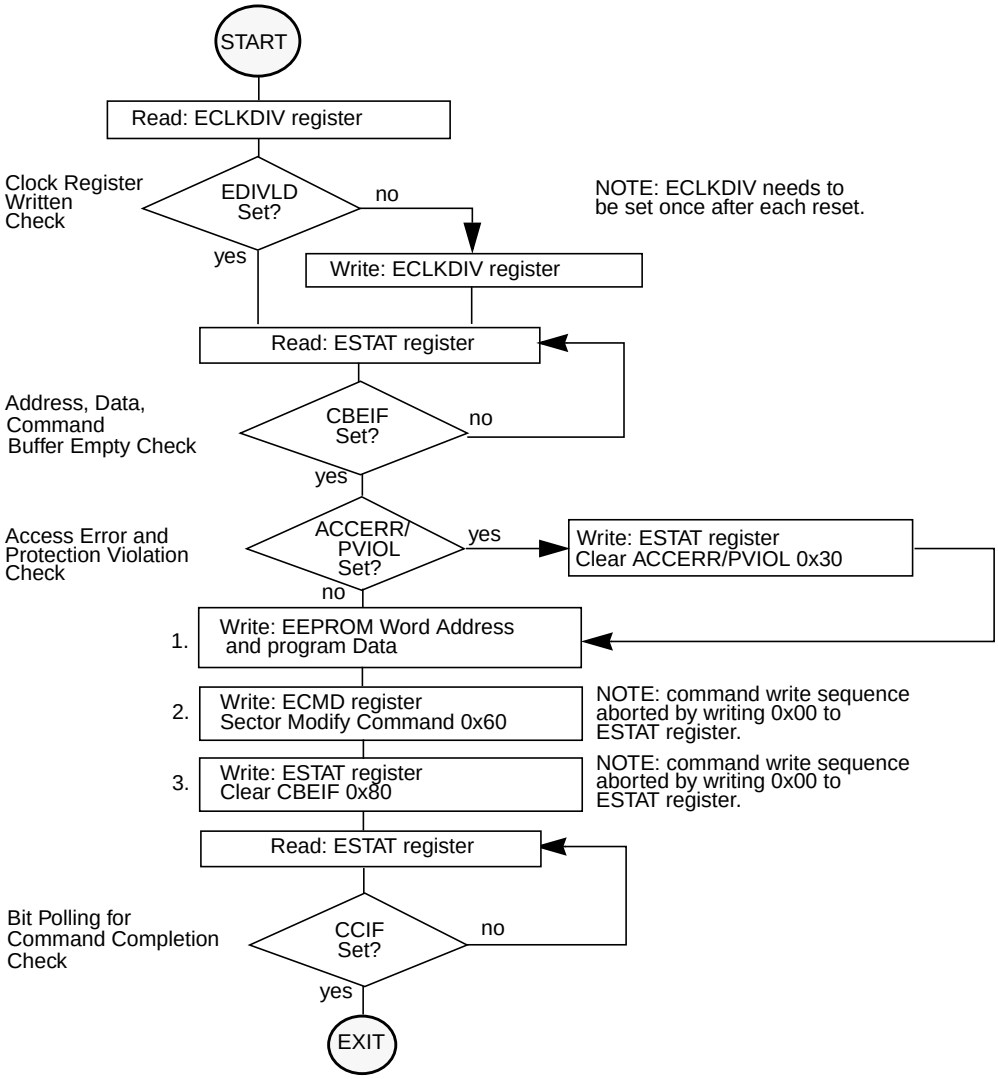

Figure 25-23. Example Sector Modify Command Flow

25.4.3 Illegal EEPROM Operations

The ACCERR flag will be set during the command write sequence if any of the following illegal steps are performed, causing the command write sequence to immediately abort:

1. Writing to an EEPROM address before initializing the ECLKDIV register.
2. Writing a byte or misaligned word to a valid EEPROM address.
3. Starting a command write sequence while a sector erase abort operation is active.
4. Writing to any EEPROM register other than ECMD after writing to an EEPROM address.
5. Writing a second command to the ECMD register in the same command write sequence.
6. Writing an invalid command to the ECMD register.
7. Writing to an EEPROM address after writing to the ECMD register.
8. Writing to any EEPROM register other than ESTAT (to clear CBEIF) after writing to the ECMD register.
9. Writing a 0 to the CBEIF flag in the ESTAT register to abort a command write sequence.

The ACCERR flag will not be set if any EEPROM register is read during a valid command write sequence.

The ACCERR flag will also be set if any of the following events occur:

1. Launching the sector erase abort command while a sector erase or sector modify operation is active which results in the early termination of the sector erase or sector modify operation (see Section 25.4.2.5, “Sector Erase Abort Command”).
2. The MCU enters stop mode and a command operation is in progress. The operation is aborted immediately and any pending command is purged (see Section 25.5.2, “Stop Mode”).

If the EEPROM memory is read during execution of an algorithm (CCIF = 0), the read operation will return invalid data and the ACCERR flag will not be set.

If the ACCERR flag is set in the ESTAT register, the user must clear the ACCERR flag before starting another command write sequence (see Section 25.3.2.6, “EEPROM Status Register (ESTAT)”).

The PVIOL flag will be set after the command is written to the ECMD register during a command write sequence if any of the following illegal operations are attempted, causing the command write sequence to immediately abort:

1. Writing the program command if the address written in the command write sequence was in a protected area of the EEPROM memory.
2. Writing the sector erase command if the address written in the command write sequence was in a protected area of the EEPROM memory.
3. Writing the mass erase command to the EEPROM memory while any EEPROM protection is enabled.
4. Writing the sector modify command if the address written in the command write sequence was in a protected area of the EEPROM memory.

If the PVIOL flag is set in the ESTAT register, the user must clear the PVIOL flag before starting another command write sequence (see Section 25.3.2.6, “EEPROM Status Register (ESTAT)”).

25.5 Operating Modes

25.5.1 Wait Mode

If a command is active (CCIF = 0) when the MCU enters the wait mode, the active command and any buffered command will be completed.

The EEPROM module can recover the MCU from wait mode if the CBEIF and CCIF interrupts are enabled (see Section 25.8, “Interrupts”).

25.5.2 Stop Mode

If a command is active (CCIF = 0) when the MCU enters the stop mode, the operation will be aborted and, if the operation is program, sector erase, mass erase, or sector modify, the EEPROM array data being programmed or erased may be corrupted and the CCIF and ACCERR flags will be set. If active, the high voltage circuitry to the EEPROM memory will immediately be switched off when entering stop mode. Upon exit from stop mode, the CBEIF flag is set and any buffered command will not be launched. The ACCERR flag must be cleared before starting a command write sequence (see Section 25.4.1.2, “Command Write Sequence”).

NOTE

As active commands are immediately aborted when the MCU enters stop mode, it is strongly recommended that the user does not use the STOP instruction during program, sector erase, mass erase, or sector modify operations.

25.5.3 Background Debug Mode

In background debug mode (BDM), the EPROT register is writable. If the MCU is unsecured, then all EEPROM commands listed in Table 25-9 can be executed. If the MCU is secured and is in special single chip mode, the only command available to execute is mass erase.

25.6 EEPROM Module Security

The EEPROM module does not provide any security information to the MCU. After each reset, the security state of the MCU is a function of information provided by the Flash module (see the specific FTX Block Guide).

25.6.1 Unsecuring the MCU in Special Single Chip Mode using BDM

Before the MCU can be unsecured in special single chip mode, the EEPROM memory must be erased using the following method :

- Reset the MCU into special single chip mode, delay while the erase test is performed by the BDM secure ROM, send BDM commands to disable protection in the EEPROM module, and execute a mass erase command write sequence to erase the EEPROM memory.

After the CCIF flag sets to indicate that the EEPROM mass operation has completed and assuming that the Flash memory has also been erased, reset the MCU into special single chip mode. The BDM secure ROM will verify that the Flash and EEPROM memory are erased and will assert the UNSEC bit in the BDM status register. This BDM action will cause the MCU to override the Flash security state and the MCU will be unsecured. Once the MCU is unsecured, BDM commands will be enabled and the Flash security byte may be programmed to the unsecure state.

25.7 Resets

25.7.1 EEPROM Reset Sequence

On each reset, the EEPROM module executes a reset sequence to hold CPU activity while loading the EPROT register from the EEPROM memory according to Table 25-1.

25.7.2 Reset While EEPROM Command Active

If a reset occurs while any EEPROM command is in progress, that command will be immediately aborted. The state of a word being programmed or the sector / block being erased is not guaranteed.

25.8 Interrupts

The EEPROM module can generate an interrupt when all EEPROM command operations have completed, when the EEPROM address, data, and command buffers are empty.

Table 25-10. EEPROM Interrupt Sources

Interrupt Source	Interrupt Flag	Local Enable	Global (CCR) Mask
EEPROM address, data, and command buffers empty	CBEIF (ESTAT register)	CBEIE (ECNFG register)	I Bit
All EEPROM commands completed	CCIF (ESTAT register)	CCIE (ECNFG register)	I Bit

NOTE

Vector addresses and their relative interrupt priority are determined at the MCU level.

25.8.1 Description of EEPROM Interrupt Operation

The logic used for generating interrupts is shown in Figure 25-24.

The EEPROM module uses the CBEIF and CCIF flags in combination with the CBIE and CCIE enable bits to generate the EEPROM command interrupt request.

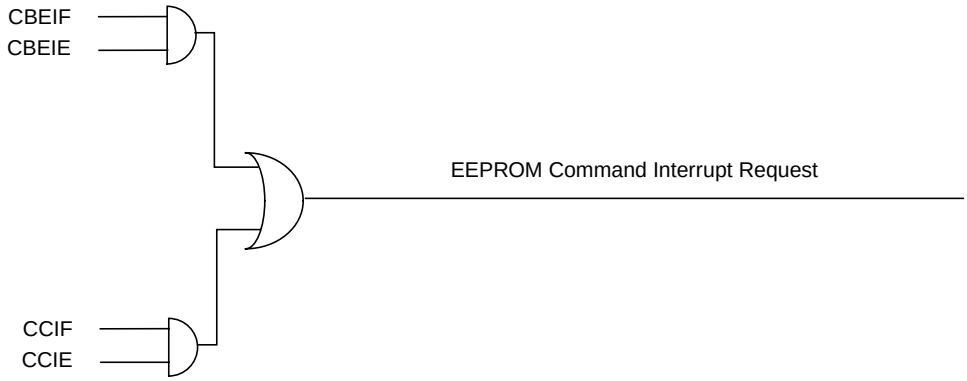

Figure 25-24. EEPROM Interrupt Implementation

For a detailed description of the register bits, refer to Section 25.3.2.4, “EEPROM Configuration Register (ECNFG)” and Section 25.3.2.6, “EEPROM Status Register (ESTAT)” .

Chapter 26
4 Kbyte EEPROM Module (S12XEETX4KV2)

26.1 Introduction

This document describes the EETX4K module which includes a 4 Kbyte EEPROM (nonvolatile) memory. The EEPROM memory may be read as either bytes, aligned words, or misaligned words. Read access time is one bus cycle for bytes and aligned words, and two bus cycles for misaligned words.

The EEPROM memory is ideal for data storage for single-supply applications allowing for field reprogramming without requiring external voltage sources for program or erase. Program and erase functions are controlled by a command driven interface. The EEPROM module supports both block erase (all memory bytes) and sector erase (4 memory bytes). An erased bit reads 1 and a programmed bit reads 0. The high voltage required to program and erase the EEPROM memory is generated internally. It is not possible to read from the EEPROM block while it is being erased or programmed.

CAUTION

An EEPROM word (2 bytes) must be in the erased state before being programmed. Cumulative programming of bits within a word is not allowed.

26.1.1 Glossary

Command Write Sequence — A three-step MCU instruction sequence to execute built-in algorithms (including program and erase) on the EEPROM memory.

26.1.2 Features

- 4 Kbytes of EEPROM memory divided into 1024 sectors of 4 bytes
- Automated program and erase algorithm
- Interrupts on EEPROM command completion and command buffer empty
- Fast sector erase and word program operation
- 2-stage command pipeline
- Sector erase abort feature for critical interrupt response
- Flexible protection scheme to prevent accidental program or erase
- Single power supply for all EEPROM operations including program and erase

26.1.3 Modes of Operation

Program, erase and erase verify operations (please refer to Section 26.4.1, “EEPROM Command Operations” for details).

26.1.4 Block Diagram

A block diagram of the EEPROM module is shown in Figure 26-1.

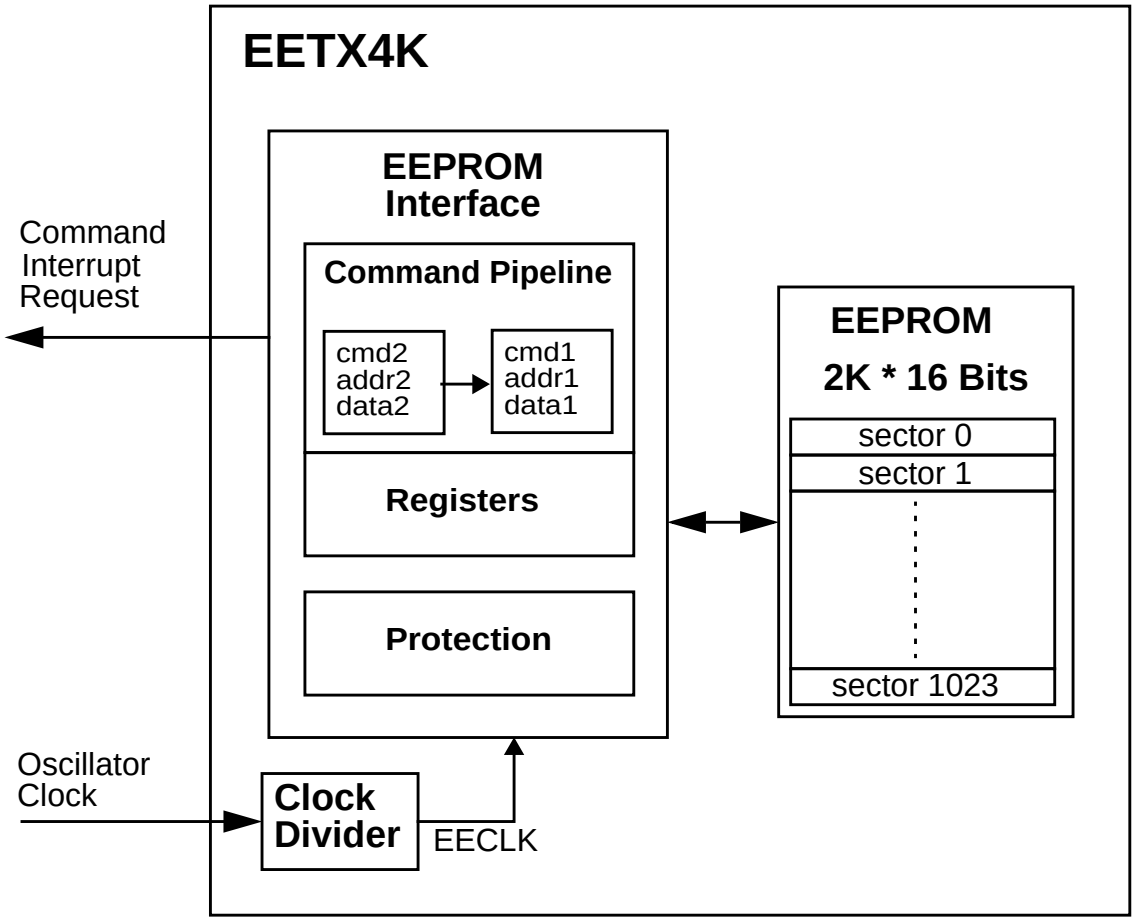

Figure 26-1. EETX4K Block Diagram

26.2 External Signal Description

The EEPROM module contains no signals that connect off-chip.

26.3 Memory Map and Register Definition

This section describes the memory map and registers for the EEPROM module.

26.3.1 Module Memory Map

The EEPROM memory map is shown in Figure 26-2. The HCS12X architecture places the EEPROM memory addresses between global addresses 0x13_F000 and 0x13_FFFF. The EPROT register, described in Section 26.3.2.5, “EEPROM Protection Register (EPROT)”, can be set to protect the upper region in the EEPROM memory from accidental program or erase. The EEPROM addresses covered by this protectable

region are shown in the EEPROM memory map. The default protection setting is stored in the EEPROM configuration field as described in Table 26-1.

Table 26-1. EEPROM Configuration Field

Global Address	Size (bytes)	Description
0x13_FFFC	1	Reserved
0x13_FFFD	1	EEPROM Protection byte Refer to Section 26.3.2.5, “EEPROM Protection Register (EPROT)”
0x13_FFFE – 0x13_FFFF	2	Reserved

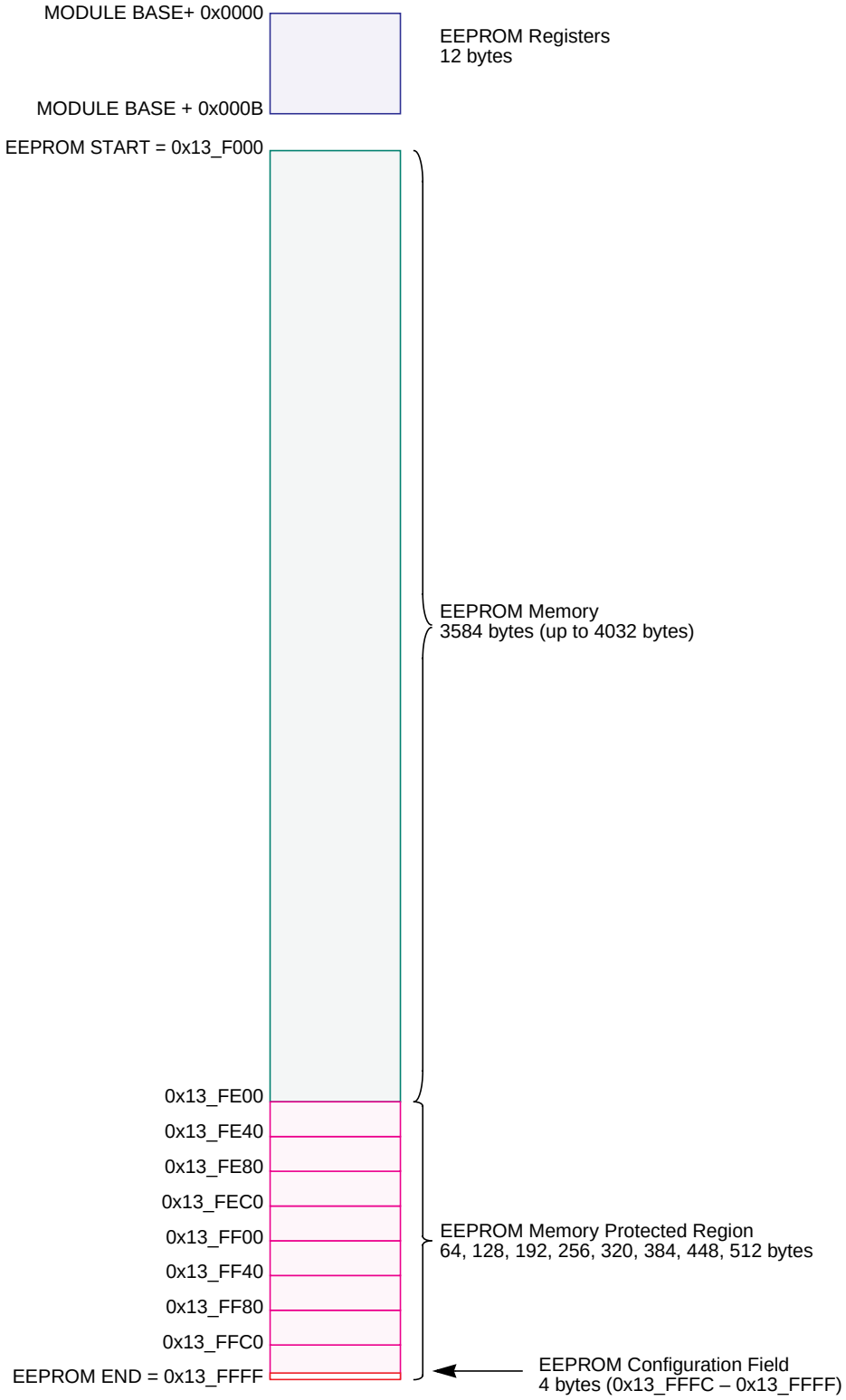

Figure 26-2. EEPROM Memory Map

The EEPROM module also contains a set of 12 control and status registers located between EEPROM module base + 0x0000 and 0x000B. A summary of the EEPROM module registers is given in Table 26-2 while their accessibility is detailed in Section 26.3.2, “Register Descriptions”.

Table 26-2. EEPROM Register Map

Module Base +	Register Name	Normal Mode Access
0x0000	EEPROM Clock Divider Register (ECLKDIV)	R/W
0x0001	RESERVED1[1]	R
0x0002	RESERVED2[1]	R
0x0003	EEPROM Configuration Register (ECNFG)	R/W
0x0004	EEPROM Protection Register (EPROT)	R/W
0x0005	EEPROM Status Register (ESTAT)	R/W
0x0006	EEPROM Command Register (ECMD)	R/W
0x0007	RESERVED3[1]	R
0x0008	EEPROM High Address Register (EADDRHI)[1]	R
0x0009	EEPROM Low Address Register (EADDRLO)[1]	R
0x000A	EEPROM High Data Register (EDATAHI)[1]	R
0x000B	EEPROM Low Data Register (EDATALO)[1]	R

[1] Intended for factory test purposes only.

26.3.2 Register Descriptions

Register Name		Bit 7	6	5	4	3	2	1	Bit 0
ECLKDIV	R	EDIVLD	PRDIV8	EDIV5	EDIV4	EDIV3	EDIV2	EDIV1	EDIV0
	W								
RESERVED1	R	0	0	0	0	0	0	0	0
	W								
RESERVED2	R	0	0	0	0	0	0	0	0
	W								
ECNFG	R	CBEIE	CCIE	0	0	0	0	0	0
	W								
EPROT	R	EPOPEN	RNV6	RNV5	RNV4	EPDIS	EPS2	EPS1	EPS0
	W								
ESTAT	R	CBEIF	CCIF	PVIOL	ACCERR	0	BLANK	0	0
	W								
ECMD	R	0	CMDB						
	W								
RESERVED3	R	0	0	0	0	0	0	0	0
	W								
EADDRHI	R	0	0	0	0	0	EABHI		
	W								
EADDRLO	R	EABLO							
	W								
EDATAHI	R	EDHI							
	W								
EDATALO	R	EDLO							
	W								

= Unimplemented or Reserved

Figure 26-3. EETX4K Register Summary

26.3.2.1 EEPROM Clock Divider Register (ECLKDIV)

The ECLKDIV register is used to control timed events in program and erase algorithms.

	7	6	5	4	3	2	1	0
R	EDIVLD	PRDIV8	EDIV5	EDIV4	EDIV3	EDIV2	EDIV1	EDIV0
W								
Reset	0	0	0	0	0	0	0	0

= Unimplemented or Reserved

Figure 26-4. EEPROM Clock Divider Register (ECLKDIV)

All bits in the ECLKDIV register are readable, bits 6–0 are write once and bit 7 is not writable.

Table 26-3. ECLKDIV Field Descriptions

Field	Description
7 EDIVLD	**Clock Divider Loaded** 0 Register has not been written. 1 Register has been written to since the last reset.
6 PRDIV8	**Enable Prescalar by 8** 0 The oscillator clock is directly fed into the ECLKDIV divider. 1 Enables a Prescalar by 8, to divide the oscillator clock before feeding into the clock divider.
5–0 EDIV[5:0]	**Clock Divider Bits** — The combination of PRDIV8 and EDIV[5:0] effectively divides the EEPROM module input oscillator clock down to a frequency of 150 kHz – 200 kHz. The maximum divide ratio is 512. Please refer to Section 26.4.1.1, “Writing the ECLKDIV Register” for more information.

26.3.2.2 RESERVED1

This register is reserved for factory testing and is not accessible.

	7	6	5	4	3	2	1	0
R	0	0	0	0	0	0	0	0
W								
Reset	0	0	0	0	0	0	0	0

= Unimplemented or Reserved

Figure 26-5. RESERVED1

All bits read 0 and are not writable.

26.3.2.3 RESERVED2

This register is reserved for factory testing and is not accessible.

	7	6	5	4	3	2	1	0
R	0	0	0	0	0	0	0	0
W								
Reset	0	0	0	0	0	0	0	0

= Unimplemented or Reserved

Figure 26-6. RESERVED2

All bits read 0 and are not writable.

26.3.2.4 EEPROM Configuration Register (ECNFG)

The ECNFG register enables the EEPROM interrupts.

	7	6	5	4	3	2	1	0
R	CBEIE	CCIE	0	0	0	0	0	0
W								
Reset	0	0	0	0	0	0	0	0

= Unimplemented or Reserved

Figure 26-7. EEPROM Configuration Register (ECNFG)

CBEIE and CCIE bits are readable and writable while all remaining bits read 0 and are not writable.

Table 26-4. ECNFG Field Descriptions

Field	Description
7 CBEIE	**Command Buffer Empty Interrupt Enable** — The CBEIE bit enables an interrupt in case of an empty command buffer in the EEPROM module. 0 Command Buffer Empty interrupt disabled. 1 An interrupt will be requested whenever the CBEIF flag (see Section 26.3.2.6, “EEPROM Status Register (ESTAT)”) is set.
6 CCIE	**Command Complete Interrupt Enable** — The CCIE bit enables an interrupt in case all commands have been completed in the EEPROM module. 0 Command Complete interrupt disabled. 1 An interrupt will be requested whenever the CCIF flag (see Section 26.3.2.6, “EEPROM Status Register (ESTAT)”) is set.

26.3.2.5 EEPROM Protection Register (EPROT)

The EPROT register defines which EEPROM sectors are protected against program or erase operations.

	7	6	5	4	3	2	1	0
R	EPOPEN	RNV6	RNV5	RNV4	EPDIS	EPS2	EPS1	EPS0
W								
Reset	F	F	F	F	F	F	F	F

= Unimplemented or Reserved

Figure 26-8. EEPROM Protection Register (EPROT)

During the reset sequence, the EPROT register is loaded from the EEPROM Protection byte at address offset 0x0FFD (see Table 26-1).All bits in the EPROT register are readable and writable except for RNV[6:4] which are only readable. The EPOPEN and EPDIS bits can only be written to the protected state. The EPS bits can be written anytime until bit EPDIS is cleared. If the EPOPEN bit is cleared, the state of the EPDIS and EPS bits is irrelevant.

To change the EEPROM protection that will be loaded during the reset sequence, the EEPROM memory must be unprotected, then the EEPROM Protection byte must be reprogrammed. Trying to alter data in any protected area in the EEPROM memory will result in a protection violation error and the PVIOL flag will be set in the ESTAT register. The mass erase of an EEPROM block is possible only when protection is fully disabled by setting the EPOPEN and EPDIS bits.

Table 26-5. EPROT Field Descriptions

Field	Description
7 EPOPEN	**Opens the EEPROM for Program or Erase** 0 The entire EEPROM memory is protected from program and erase. 1 The EEPROM sectors not protected are enabled for program or erase.
6–4 RNV[6:4]	**Reserved Nonvolatile Bits** — The RNV[6:4] bits should remain in the erased state “1” for future enhancements.
3 EPDIS	**EEPROM Protection Address Range Disable** — The EPDIS bit determines whether there is a protected area in a specific region of the EEPROM memory ending with address offset 0x0FFF. 0 Protection enabled. 1 Protection disabled.
2–0 EPS[2:0]	**EEPROM Protection Address Size** — The EPS[2:0] bits determine the size of the protected area as shown inTable 26-6. The EPS bits can only be written to while the EPDIS bit is set.

Table 26-6. EEPROM Protection Address Range

EPS[2:0]	Address Offset Range	Protected Size
000	0x0FC0 – 0x0FFF	64 bytes
001	0x0F80 – 0x0FFF	128 bytes
010	0x0F40 – 0x0FFF	192 bytes
011	0x0F00 – 0x0FFF	256 bytes
100	0x0EC0 – 0x0FFF	320 bytes
101	0x0E80 – 0x0FFF	384 bytes
110	0x0E40 – 0x0FFF	448 bytes
111	0x0E00 – 0x0FFF	512 bytes

26.3.2.6 EEPROM Status Register (ESTAT)

The ESTAT register defines the operational status of the module.

	7	6	5	4	3	2	1	0
R	CBEIF	CCIF	PVIOL	ACCERR	0	BLANK	0	0
W								
Reset	1	1	0	0	0	0	0	0

= Unimplemented or Reserved

Figure 26-9. EEPROM Status Register (ESTAT — Normal Mode)

	7	6	5	4	3	2	1	0
R	CBEIF	CCIF	PVIOL	ACCERR	0	BLANK	FAIL	0
W								
Reset	1	1	0	0	0	0	0	0

= Unimplemented or Reserved

Figure 26-10. EEPROM Status Register (ESTAT — Special Mode)

CBEIF, PVIOL, and ACCERR are readable and writable, CCIF and BLANK are readable and not writable, remaining bits read 0 and are not writable in normal mode. FAIL is readable and writable in special mode.

Table 26-7. ESTAT Field Descriptions

Field	Description
7 CBEIF	**Command Buffer Empty Interrupt Flag** — The CBEIF flag indicates that the address, data, and command buffers are empty so that a new command write sequence can be started. The CBEIF flag is cleared by writing a 1 to CBEIF. Writing a 0 to the CBEIF flag has no effect on CBEIF. Writing a 0 to CBEIF after writing an aligned word to the EEPROM address space but before CBEIF is cleared will abort a command write sequence and cause the ACCERR flag to be set. Writing a 0 to CBEIF outside of a command write sequence will not set the ACCERR flag. The CBEIF flag is used together with the CBEIE bit in the ECNFG register to generate an interrupt request (see Figure 26-24). 0 Buffers are full. 1 Buffers are ready to accept a new command.
6 CCIF	**Command Complete Interrupt Flag** — The CCIF flag indicates that there are no more commands pending. The CCIF flag is cleared when CBEIF is clear and sets automatically upon completion of all active and pending commands. The CCIF flag does not set when an active commands completes and a pending command is fetched from the command buffer. Writing to the CCIF flag has no effect on CCIF. The CCIF flag is used together with the CCIE bit in the ECNFG register to generate an interrupt request (see Figure 26-24). 0 Command in progress. 1 All commands are completed.
5 PVIOL	**Protection Violation Flag** — The PVIOL flag indicates an attempt was made to program or erase an address in a protected area of the EEPROM memory during a command write sequence. The PVIOL flag is cleared by writing a 1 to PVIOL. Writing a 0 to the PVIOL flag has no effect on PVIOL. While PVIOL is set, it is not possible to launch a command or start a command write sequence. 0 No failure. 1 A protection violation has occurred.
4 ACCERR	**Access Error Flag** — The ACCERR flag indicates an illegal access has occurred to the EEPROM memory caused by either a violation of the command write sequence (see Section 26.4.1.2, “Command Write Sequence”), issuing an illegal EEPROM command (see Table 26-9), launching the sector erase abort command terminating a sector erase operation early (see Section 26.4.2.5, “Sector Erase Abort Command”) or the execution of a CPU STOP instruction while a command is executing (CCIF = 0). The ACCERR flag is cleared by writing a 1 to ACCERR. Writing a 0 to the ACCERR flag has no effect on ACCERR. While ACCERR is set, it is not possible to launch a command or start a command write sequence. If ACCERR is set by an erase verify operation, any buffered command will not launch. 0 No access error detected. 1 Access error has occurred.
2 BLANK	**Flag Indicating the Erase Verify Operation Status** — When the CCIF flag is set after completion of an erase verify command, the BLANK flag indicates the result of the erase verify operation. The BLANK flag is cleared by the EEPROM module when CBEIF is cleared as part of a new valid command write sequence. Writing to the BLANK flag has no effect on BLANK. 0 EEPROM block verified as not erased. 1 EEPROM block verified as erased.
1 FAIL	**Flag Indicating a Failed EEPROM Operation** — The FAIL flag will set if the erase verify operation fails (EEPROM block verified as not erased). The FAIL flag is cleared by writing a 1 to FAIL. Writing a 0 to the FAIL flag has no effect on FAIL. 0 EEPROM operation completed without error. 1 EEPROM operation failed.

26.3.2.7 EEPROM Command Register (ECMD)

The ECMD register is the EEPROM command register.

	7	6	5	4	3	2	1	0
R	0	CMDB						
W								
Reset	0	0	0	0	0	0	0	0

= Unimplemented or Reserved

Figure 26-11. EEPROM Command Register (ECMD)

All CMDB bits are readable and writable during a command write sequence while bit 7 reads 0 and is not writable.

Table 26-8. ECMD Field Descriptions

Field	Description
6–0 CMDB[6:0]	**EEPROM Command Bits** — Valid EEPROM commands are shown in Table 26-9. Writing any command other than those listed in Table 26-9 sets the ACCERR flag in the ESTAT register.

Table 26-9. Valid EEPROM Command List

CMDB[6:0]	Command
0x05	Erase Verify
0x20	Word Program
0x40	Sector Erase
0x41	Mass Erase
0x47	Sector Erase Abort
0x60	Sector Modify

26.3.2.8 RESERVED3

This register is reserved for factory testing and is not accessible.

	7	6	5	4	3	2	1	0
R	0	0	0	0	0	0	0	0
W								
Reset	0	0	0	0	0	0	0	0

= Unimplemented or Reserved

Figure 26-12. RESERVED3

All bits read 0 and are not writable.

EEPROM Address Registers (EADDR)

The EADDRHI and EADDRLO registers are the EEPROM address registers.

	7	6	5	4	3	2	1	0
R	0	0	0	0	0	EABHI		
W								
Reset	0	0	0	0	0	0	0	0

= Unimplemented or Reserved

Figure 26-13. EEPROM Address High Register (EADDRHI)

	7	6	5	4	3	2	1	0
R	EABLO							
W								
Reset	0	0	0	0	0	0	0	0

= Unimplemented or Reserved

Figure 26-14. EEPROM Address Low Register (EADDRLO)

All EABHI and EABLO bits read 0 and are not writable in normal modes.

All EABHI and EABLO bits are readable and writable in special modes.

The MCU address bit AB0 is not stored in the EADDR registers since the EEPROM block is not byte addressable.

26.3.2.9 EEPROM Data Registers (EDATA)

The EDATAHI and EDATALO registers are the EEPROM data registers.

	7	6	5	4	3	2	1	0
R	EDHI							
W								
Reset	0	0	0	0	0	0	0	0

= Unimplemented or Reserved

Figure 26-15. EEPROM Data High Register (EDATAHI)

	7	6	5	4	3	2	1	0
R	EDLO							
W								
Reset	0	0	0	0	0	0	0	0

= Unimplemented or Reserved

Figure 26-16. EEPROM Data Low Register (EDATALO)

All EDHI and EDLO bits read 0 and are not writable in normal modes.

All EDHI and EDLO bits are readable and writable in special modes.

26.4 Functional Description

26.4.1 EEPROM Command Operations

Write operations are used to execute program, erase, erase verify, sector erase abort, and sector modify algorithms described in this section. The program, erase, and sector modify algorithms are controlled by a state machine whose timebase, EECLK, is derived from the oscillator clock via a programmable divider. The command register as well as the associated address and data registers operate as a buffer and a register (2-stage FIFO) so that a second command along with the necessary data and address can be stored to the buffer while the first command is still in progress. Buffer empty as well as command completion are signalled by flags in the EEPROM status register with interrupts generated, if enabled.

The next sections describe:

1. How to write the ECLKDIV register
2. Command write sequences to program, erase, erase verify, sector erase abort, and sector modify operations on the EEPROM memory
3. Valid EEPROM commands
4. Effects resulting from illegal EEPROM command write sequences or aborting EEPROM operations

26.4.1.1 Writing the ECLKDIV Register

Prior to issuing any EEPROM command after a reset, the user is required to write the ECLKDIV register to divide the oscillator clock down to within the 150 kHz to 200 kHz range. Since the program and erase timings are also a function of the bus clock, the ECLKDIV determination must take this information into account.

If we define:

- ECLK as the clock of the EEPROM timing control block
- Tbus as the period of the bus clock
- INT(x) as taking the integer part of x (e.g., INT(4.323)=4)

then ECLKDIV register bits PRDIV8 and EDIV[5:0] are to be set as described in Figure 26-17.

For example, if the oscillator clock frequency is 950 kHz and the bus clock frequency is 10 MHz, ECLKDIV bits EDIV[5:0] should be set to 0x04 (000100) and bit PRDIV8 set to 0. The resulting EECLK frequency is then 190 kHz. As a result, the EEPROM program and erase algorithm timings are increased over the optimum target by:

$$(200 - 190)/200 \times 100 = 5\%$$

If the oscillator clock frequency is 16 MHz and the bus clock frequency is 40 MHz, ECLKDIV bits EDIV[5:0] should be set to 0x0A (001010) and bit PRDIV8 set to 1. The resulting EECLK frequency is

then 182 kHz. In this case, the EEPROM program and erase algorithm timings are increased over the optimum target by:

$$(200 - 182)/200 \times 100 = 9\%$$

CAUTION

Program and erase command execution time will increase proportionally with the period of EECLK. Because of the impact of clock synchronization on the accuracy of the functional timings, programming or erasing the EEPROM memory cannot be performed if the bus clock runs at less than 1 MHz. Programming or erasing the EEPROM memory with EECLK < 150 kHz should be avoided. Setting ECLKDIV to a value such that EECLK < 150 kHz can destroy the EEPROM memory due to overstress. Setting ECLKDIV to a value such that (1/EECLK+Tbus) < 5 µs can result in incomplete programming or erasure of the EEPROM memory cells.

If the ECLKDIV register is written, the EDIVLD bit is set automatically. If the EDIVLD bit is 0, the ECLKDIV register has not been written since the last reset. If the ECLKDIV register has not been written to, the EEPROM command loaded during a command write sequence will not execute and the ACCERR flag in the ESTAT register will set.

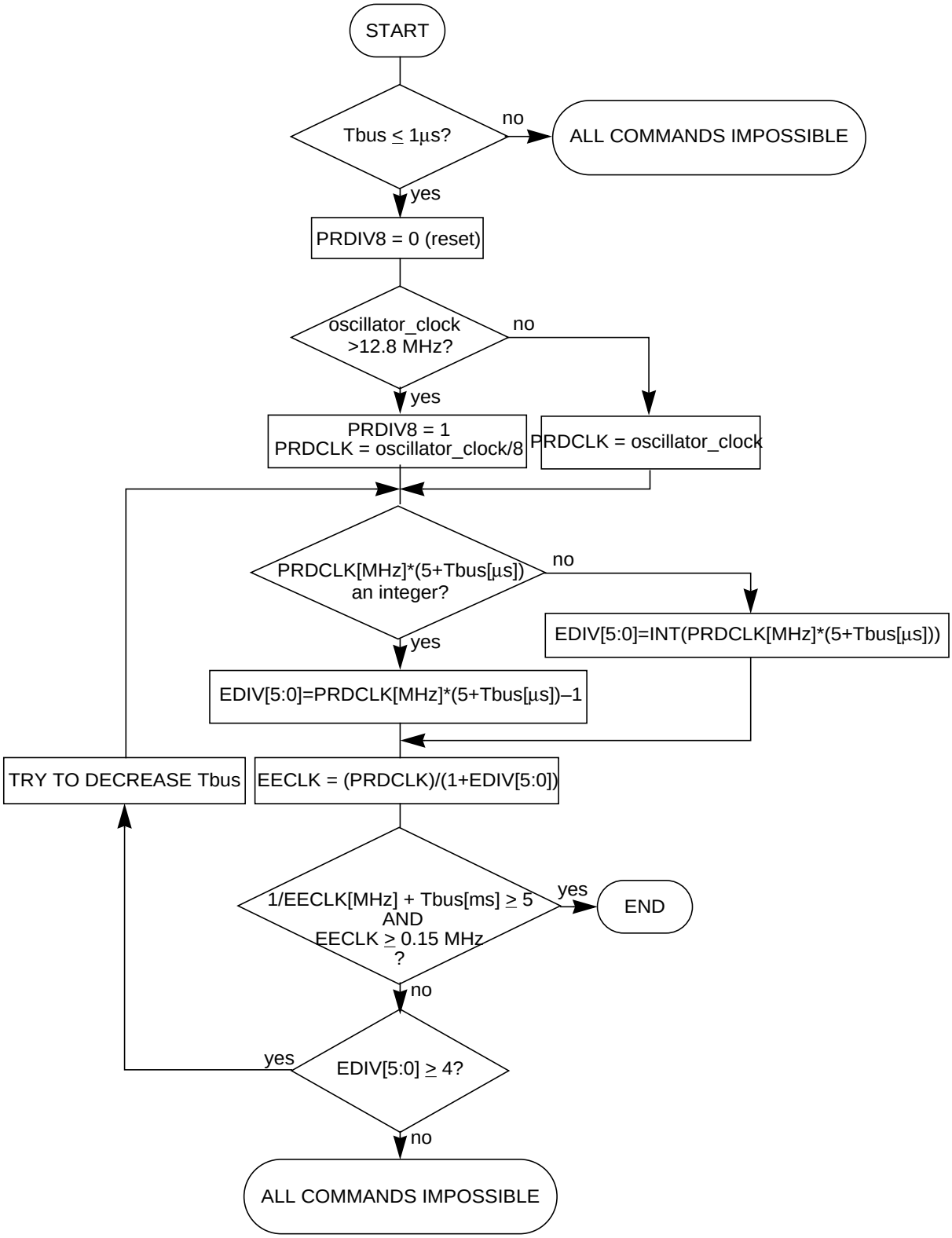

Figure 26-17. Determination Procedure for PRDIV8 and EDIV Bits

26.4.1.2 Command Write Sequence

The EEPROM command controller is used to supervise the command write sequence to execute program, erase, erase verify, sector erase abort, and sector modify algorithms.

Before starting a command write sequence, the ACCERR and PVIOL flags in the ESTAT register must be clear (see Section 26.3.2.6, “EEPROM Status Register (ESTAT)”) and the CBEIF flag should be tested to determine the state of the address, data and command buffers. If the CBEIF flag is set, indicating the buffers are empty, a new command write sequence can be started. If the CBEIF flag is clear, indicating the buffers are not available, a new command write sequence will overwrite the contents of the address, data and command buffers.

A command write sequence consists of three steps which must be strictly adhered to with writes to the EEPROM module not permitted between the steps. However, EEPROM register and array reads are allowed during a command write sequence. The basic command write sequence is as follows:

1. Write to one address in the EEPROM memory.
2. Write a valid command to the ECMD register.
3. Clear the CBEIF flag in the ESTAT register by writing a 1 to CBEIF to launch the command.

The address written in step 1 will be stored in the EADDR registers and the data will be stored in the EDATA registers. If the CBEIF flag in the ESTAT register is clear when the first EEPROM array write occurs, the contents of the address and data buffers will be overwritten and the CBEIF flag will be set. When the CBEIF flag is cleared, the CCIF flag is cleared on the same bus cycle by the EEPROM command controller indicating that the command was successfully launched. For all command write sequences except sector erase abort, the CBEIF flag will set four bus cycles after the CCIF flag is cleared indicating that the address, data, and command buffers are ready for a new command write sequence to begin. For sector erase abort operations, the CBEIF flag will remain clear until the operation completes. Except for the sector erase abort command, a buffered command will wait for the active operation to be completed before being launched. The sector erase abort command is launched when the CBEIF flag is cleared as part of a sector erase abort command write sequence. Once a command is launched, the completion of the command operation is indicated by the setting of the CCIF flag in the ESTAT register. The CCIF flag will set upon completion of all active and buffered commands.

26.4.2 EEPROM Commands

Table 26-10 summarizes the valid EEPROM commands along with the effects of the commands on the EEPROM block.

Table 26-10. EEPROM Command Description

ECMDB	Command	Function on EEPROM Memory
0x05	Erase Verify	Verify all memory bytes in the EEPROM block are erased. If the EEPROM block is erased, the BLANK flag in the ESTAT register will set upon command completion.
0x20	Program	Program a word (two bytes) in the EEPROM block.
0x40	Sector Erase	Erase all four memory bytes in a sector of the EEPROM block.

Table 26-10. EEPROM Command Description

ECMDB	Command	Function on EEPROM Memory
0x41	Mass Erase	Erase all memory bytes in the EEPROM block. A mass erase of the full EEPROM block is only possible when EPOPEN and EPDIS bits in the EPROT register are set prior to launching the command.
0x47	Sector Erase Abort	Abort the sector erase operation. The sector erase operation will terminate according to a set procedure. The EEPROM sector should not be considered erased if the ACCERR flag is set upon command completion.
0x60	Sector Modify	Erase all four memory bytes in a sector of the EEPROM block and reprogram the addressed word.

CAUTION

An EEPROM word (2 bytes) must be in the erased state before being programmed. Cumulative programming of bits within a word is not allowed.

26.4.2.1 Erase Verify Command

The erase verify operation will verify that the EEPROM memory is erased.

An example flow to execute the erase verify operation is shown in Figure 26-18. The erase verify command write sequence is as follows:

1. Write to an EEPROM address to start the command write sequence for the erase verify command. The address and data written will be ignored.
2. Write the erase verify command, 0x05, to the ECMD register.
3. Clear the CBEIF flag in the ESTAT register by writing a 1 to CBEIF to launch the erase verify command.

After launching the erase verify command, the CCIF flag in the ESTAT register will set after the operation has completed unless a new command write sequence has been buffered. The number of bus cycles required to execute the erase verify operation is equal to the number of words in the EEPROM memory plus 14 bus cycles as measured from the time the CBEIF flag is cleared until the CCIF flag is set. Upon completion of the erase verify operation, the BLANK flag in the ESTAT register will be set if all addresses in the EEPROM memory are verified to be erased. If any address in the EEPROM memory is not erased, the erase verify operation will terminate and the BLANK flag in the ESTAT register will remain clear.

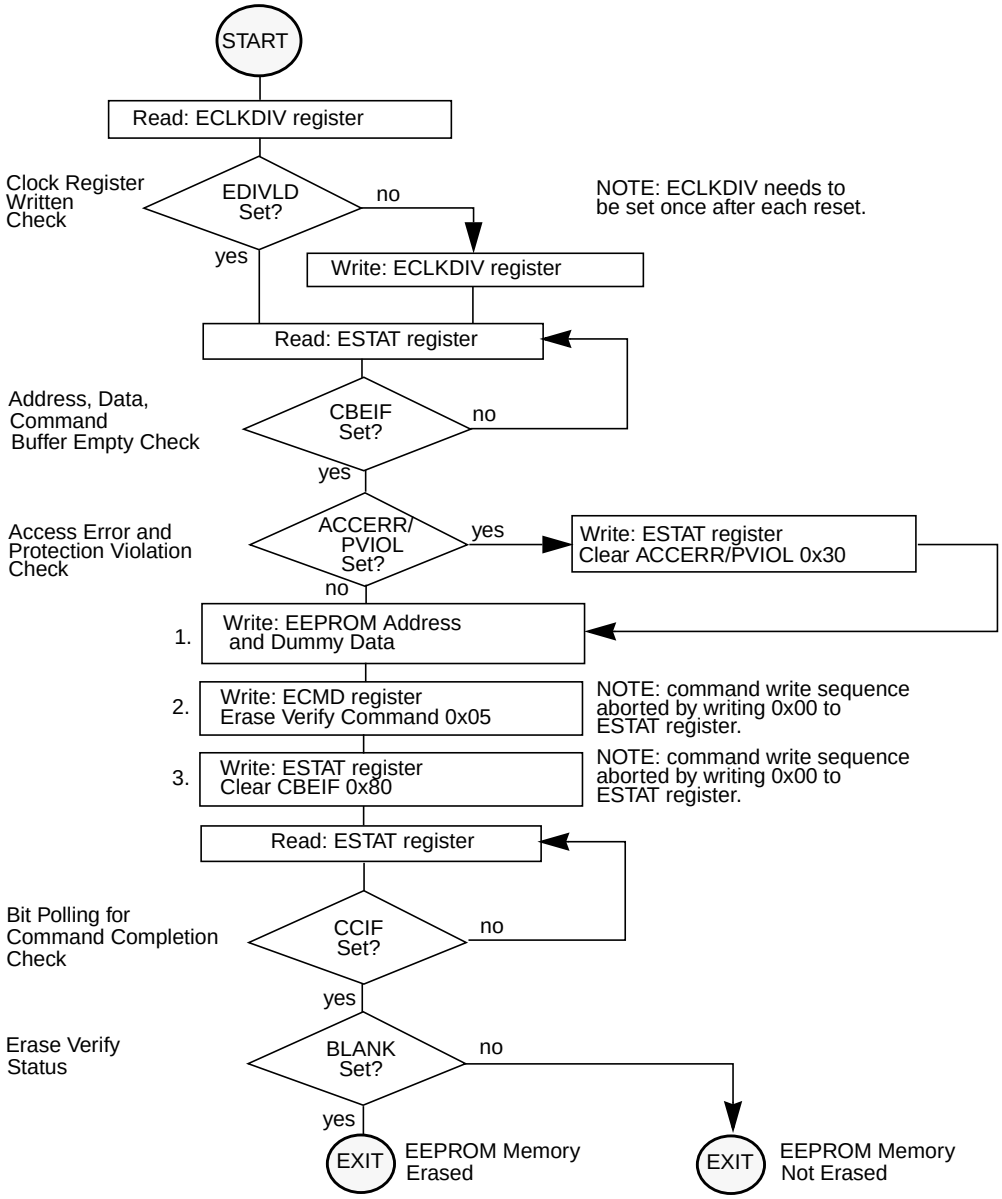

Figure 26-18. Example Erase Verify Command Flow

26.4.2.2 Program Command

The program operation will program a previously erased word in the EEPROM memory using an embedded algorithm.

An example flow to execute the program operation is shown in Figure 26-19. The program command write sequence is as follows:

1. Write to an EEPROM block address to start the command write sequence for the program command. The data written will be programmed to the address written.
2. Write the program command, 0x20, to the ECMD register.
3. Clear the CBEIF flag in the ESTAT register by writing a 1 to CBEIF to launch the program command.

If a word to be programmed is in a protected area of the EEPROM memory, the PVIOL flag in the ESTAT register will set and the program command will not launch. Once the program command has successfully launched, the CCIF flag in the ESTAT register will set after the program operation has completed unless a new command write sequence has been buffered.

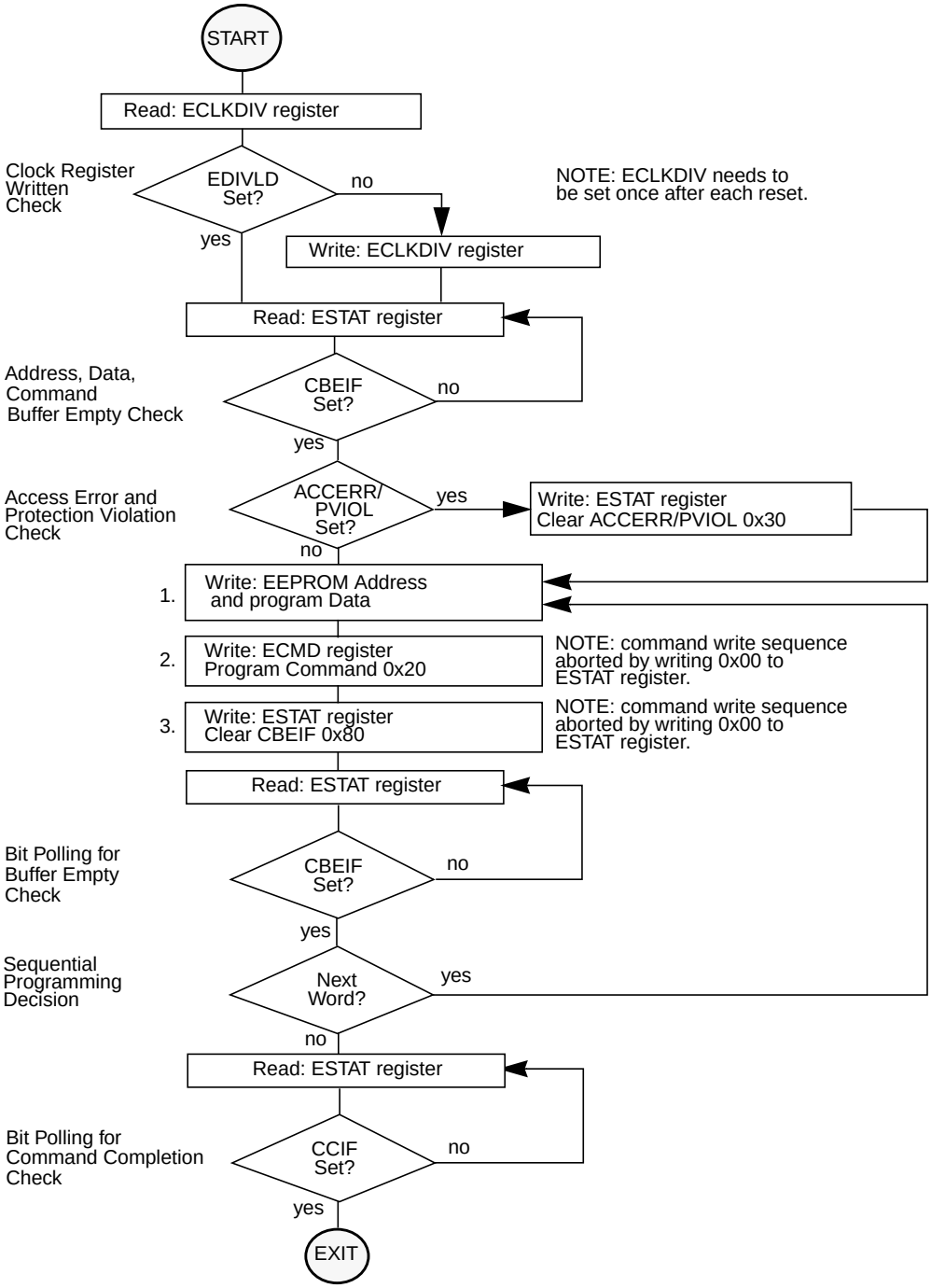

Figure 26-19. Example Program Command Flow

26.4.2.3 Sector Erase Command

The sector erase operation will erase both words in a sector of EEPROM memory using an embedded algorithm.

An example flow to execute the sector erase operation is shown in Figure 26-20. The sector erase command write sequence is as follows:

1. Write to an EEPROM memory address to start the command write sequence for the sector erase command. The EEPROM address written determines the sector to be erased while global address bits [1:0] and the data written are ignored.
2. Write the sector erase command, 0x40, to the ECMD register.
3. Clear the CBEIF flag in the ESTAT register by writing a 1 to CBEIF to launch the sector erase command.

If an EEPROM sector to be erased is in a protected area of the EEPROM memory, the PVIOL flag in the ESTAT register will set and the sector erase command will not launch. Once the sector erase command has successfully launched, the CCIF flag in the ESTAT register will set after the sector erase operation has completed unless a new command write sequence has been buffered.

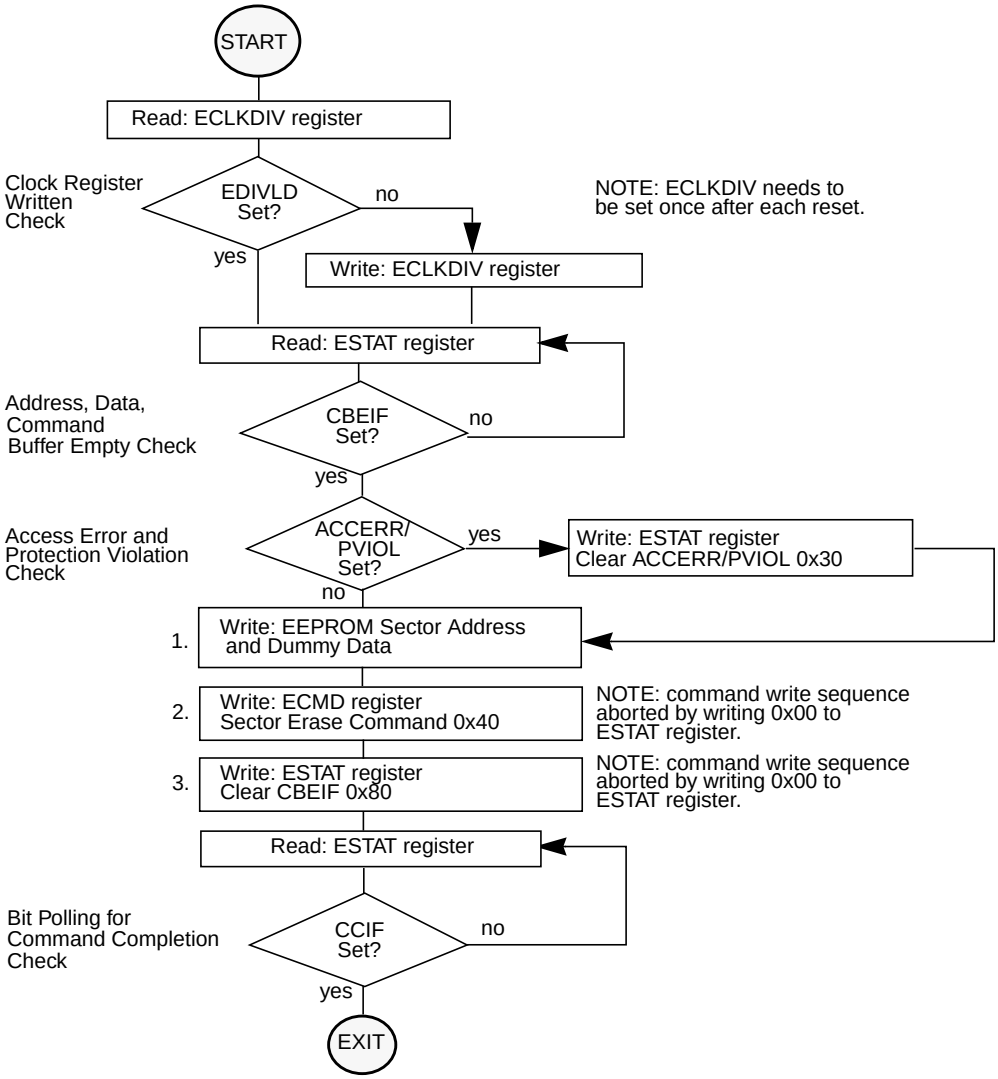

Figure 26-20. Example Sector Erase Command Flow

26.4.2.4 Mass Erase Command

The mass erase operation will erase all addresses in an EEPROM block using an embedded algorithm.

An example flow to execute the mass erase operation is shown in Figure 26-21. The mass erase command write sequence is as follows:

1. Write to an EEPROM memory address to start the command write sequence for the mass erase command. The address and data written will be ignored.
2. Write the mass erase command, 0x41, to the ECMD register.
3. Clear the CBEIF flag in the ESTAT register by writing a 1 to CBEIF to launch the mass erase command.

If the EEPROM memory to be erased contains any protected area, the PVIOL flag in the ESTAT register will set and the mass erase command will not launch. Once the mass erase command has successfully launched, the CCIF flag in the ESTAT register will set after the mass erase operation has completed unless a new command write sequence has been buffered.

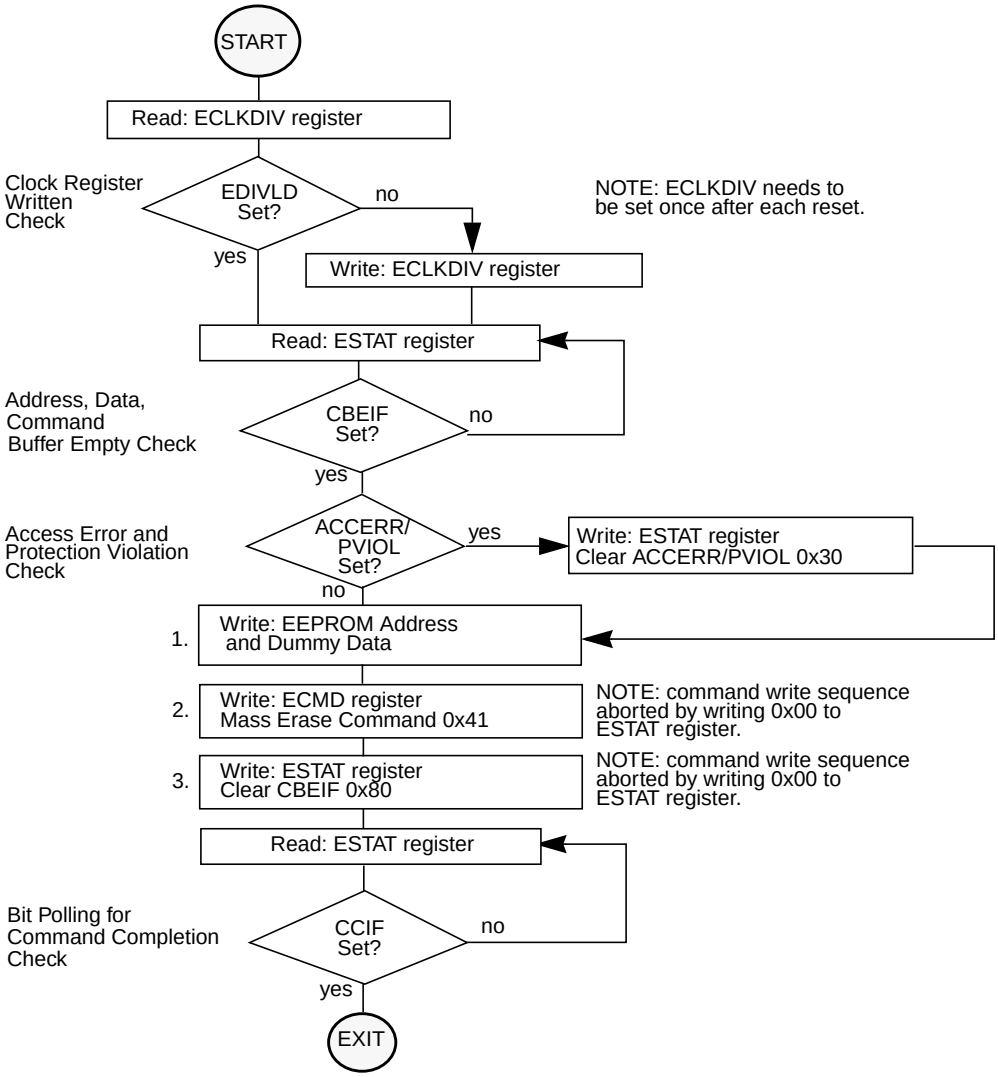

Figure 26-21. Example Mass Erase Command Flow

26.4.2.5 Sector Erase Abort Command

The sector erase abort operation will terminate the active sector erase or sector modify operation so that other sectors in an EEPROM block are available for read and program operations without waiting for the sector erase or sector modify operation to complete.

An example flow to execute the sector erase abort operation is shown in Figure 26-22. The sector erase abort command write sequence is as follows:

1. Write to any EEPROM memory address to start the command write sequence for the sector erase abort command. The address and data written are ignored.
2. Write the sector erase abort command, 0x47, to the ECMD register.
3. Clear the CBEIF flag in the ESTAT register by writing a 1 to CBEIF to launch the sector erase abort command.

If the sector erase abort command is launched resulting in the early termination of an active sector erase or sector modify operation, the ACCERR flag will set once the operation completes as indicated by the CCIF flag being set. The ACCERR flag sets to inform the user that the EEPROM sector may not be fully erased and a new sector erase or sector modify command must be launched before programming any location in that specific sector. If the sector erase abort command is launched but the active sector erase or sector modify operation completes normally, the ACCERR flag will not set upon completion of the operation as indicated by the CCIF flag being set. If the sector erase abort command is launched after the sector modify operation has completed the sector erase step, the program step will be allowed to complete. The maximum number of cycles required to abort a sector erase or sector modify operation is equal to four EECLK periods (see Section 26.4.1.1, “Writing the ECLKDIV Register”) plus five bus cycles as measured from the time the CBEIF flag is cleared until the CCIF flag is set.

NOTE

Since the ACCERR bit in the ESTAT register may be set at the completion of the sector erase abort operation, a command write sequence is not allowed to be buffered behind a sector erase abort command write sequence. The CBEIF flag will not set after launching the sector erase abort command to indicate that a command should not be buffered behind it. If an attempt is made to start a new command write sequence with a sector erase abort operation active, the ACCERR flag in the ESTAT register will be set. A new command write sequence may be started after clearing the ACCERR flag, if set.

NOTE

The sector erase abort command should be used sparingly since a sector erase operation that is aborted counts as a complete program/erase cycle.

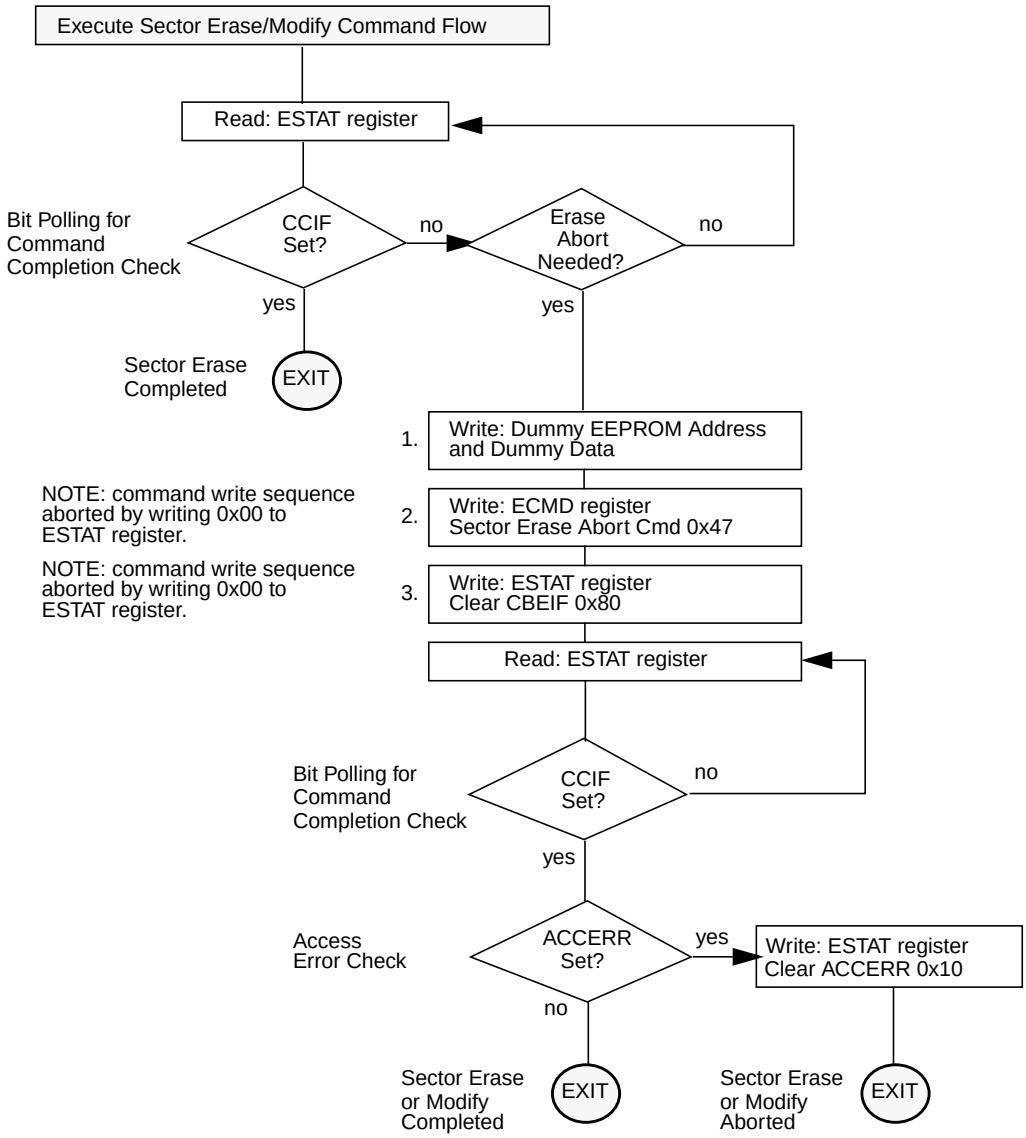

Figure 26-22. Example Sector Erase Abort Command Flow

26.4.2.6 Sector Modify Command

The sector modify operation will erase both words in a sector of EEPROM memory followed by a reprogram of the addressed word using an embedded algorithm.

An example flow to execute the sector modify operation is shown in Figure 26-23. The sector modify command write sequence is as follows:

1. Write to an EEPROM memory address to start the command write sequence for the sector modify command. The EEPROM address written determines the sector to be erased and word to be reprogrammed while byte address bit 0 is ignored.
2. Write the sector modify command, 0x60, to the ECMD register.
3. Clear the CBEIF flag in the ESTAT register by writing a 1 to CBEIF to launch the sector erase command.

If an EEPROM sector to be modified is in a protected area of the EEPROM memory, the PVIOL flag in the ESTAT register will set and the sector modify command will not launch. Once the sector modify command has successfully launched, the CCIF flag in the ESTAT register will set after the sector modify operation has completed unless a new command write sequence has been buffered.

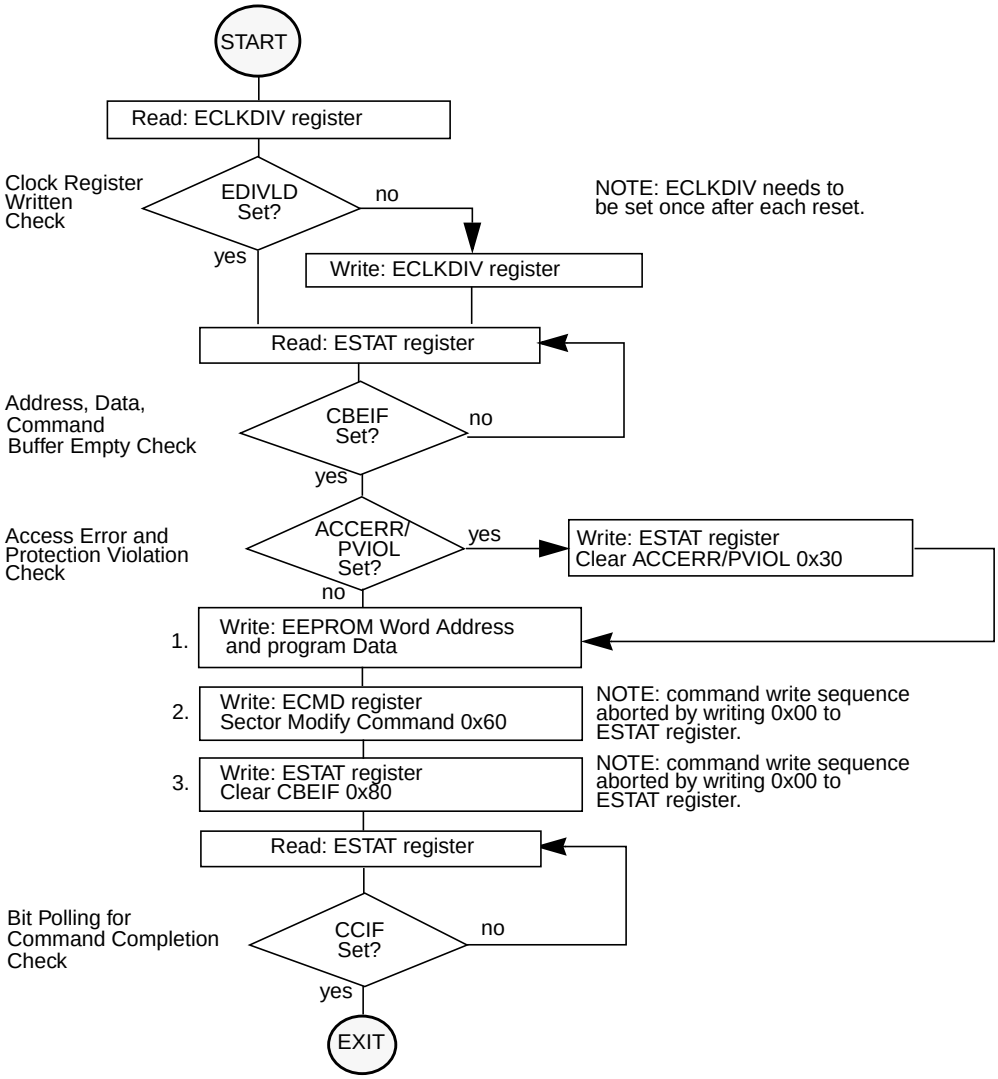

Figure 26-23. Example Sector Modify Command Flow

26.4.3 Illegal EEPROM Operations

The ACCERR flag will be set during the command write sequence if any of the following illegal steps are performed, causing the command write sequence to immediately abort:

1. Writing to an EEPROM address before initializing the ECLKDIV register.
2. Writing a byte or misaligned word to a valid EEPROM address.
3. Starting a command write sequence while a sector erase abort operation is active.
4. Writing to any EEPROM register other than ECMD after writing to an EEPROM address.
5. Writing a second command to the ECMD register in the same command write sequence.
6. Writing an invalid command to the ECMD register.
7. Writing to an EEPROM address after writing to the ECMD register.
8. Writing to any EEPROM register other than ESTAT (to clear CBEIF) after writing to the ECMD register.
9. Writing a 0 to the CBEIF flag in the ESTAT register to abort a command write sequence.

The ACCERR flag will not be set if any EEPROM register is read during a valid command write sequence.

The ACCERR flag will also be set if any of the following events occur:

1. Launching the sector erase abort command while a sector erase or sector modify operation is active which results in the early termination of the sector erase or sector modify operation (see Section 26.4.2.5, “Sector Erase Abort Command”).
2. The MCU enters stop mode and a command operation is in progress. The operation is aborted immediately and any pending command is purged (see Section 26.5.2, “Stop Mode”).

If the EEPROM memory is read during execution of an algorithm (CCIF = 0), the read operation will return invalid data and the ACCERR flag will not be set.

If the ACCERR flag is set in the ESTAT register, the user must clear the ACCERR flag before starting another command write sequence (see Section 26.3.2.6, “EEPROM Status Register (ESTAT)”).

The PVIOL flag will be set after the command is written to the ECMD register during a command write sequence if any of the following illegal operations are attempted, causing the command write sequence to immediately abort:

1. Writing the program command if the address written in the command write sequence was in a protected area of the EEPROM memory.
2. Writing the sector erase command if the address written in the command write sequence was in a protected area of the EEPROM memory.
3. Writing the mass erase command to the EEPROM memory while any EEPROM protection is enabled.
4. Writing the sector modify command if the address written in the command write sequence was in a protected area of the EEPROM memory.

If the PVIOL flag is set in the ESTAT register, the user must clear the PVIOL flag before starting another command write sequence (see Section 26.3.2.6, “EEPROM Status Register (ESTAT)”).

26.5 Operating Modes

26.5.1 Wait Mode

If a command is active (CCIF = 0) when the MCU enters the wait mode, the active command and any buffered command will be completed.

The EEPROM module can recover the MCU from wait mode if the CBEIF and CCIF interrupts are enabled (see Section 26.8, “Interrupts”).

26.5.2 Stop Mode

If a command is active (CCIF = 0) when the MCU enters the stop mode, the operation will be aborted and, if the operation is program, sector erase, mass erase, or sector modify, the EEPROM array data being programmed or erased may be corrupted and the CCIF and ACCERR flags will be set. If active, the high voltage circuitry to the EEPROM memory will immediately be switched off when entering stop mode. Upon exit from stop mode, the CBEIF flag is set and any buffered command will not be launched. The ACCERR flag must be cleared before starting a command write sequence (see Section 26.4.1.2, “Command Write Sequence”).

NOTE

As active commands are immediately aborted when the MCU enters stop mode, it is strongly recommended that the user does not use the STOP instruction during program, sector erase, mass erase, or sector modify operations.

26.5.3 Background Debug Mode

In background debug mode (BDM), the EPROT register is writable. If the MCU is unsecured, then all EEPROM commands listed in Table 26-10 can be executed. If the MCU is secured and is in special single chip mode, the only command available to execute is mass erase.

26.6 EEPROM Module Security

The EEPROM module does not provide any security information to the MCU. After each reset, the security state of the MCU is a function of information provided by the Flash module (see the specific FTX Block Guide).

26.6.1 Unsecuring the MCU in Special Single Chip Mode using BDM

Before the MCU can be unsecured in special single chip mode, the EEPROM memory must be erased using the following method :

- Reset the MCU into special single chip mode, delay while the erase test is performed by the BDM secure ROM, send BDM commands to disable protection in the EEPROM module, and execute a mass erase command write sequence to erase the EEPROM memory.

After the CCIF flag sets to indicate that the EEPROM mass operation has completed and assuming that the Flash memory has also been erased, reset the MCU into special single chip mode. The BDM secure ROM will verify that the Flash and EEPROM memory are erased and will assert the UNSEC bit in the BDM status register. This BDM action will cause the MCU to override the Flash security state and the MCU will be unsecured. Once the MCU is unsecured, BDM commands will be enabled and the Flash security byte may be programmed to the unsecure state.

26.7 Resets

26.7.1 EEPROM Reset Sequence

On each reset, the EEPROM module executes a reset sequence to hold CPU activity while loading the EPROT register from the EEPROM memory according to Table 26-1.

26.7.2 Reset While EEPROM Command Active

If a reset occurs while any EEPROM command is in progress, that command will be immediately aborted. The state of a word being programmed or the sector / block being erased is not guaranteed.

26.8 Interrupts

The EEPROM module can generate an interrupt when all EEPROM command operations have completed, when the EEPROM address, data, and command buffers are empty.

Table 26-11. EEPROM Interrupt Sources

Interrupt Source	Interrupt Flag	Local Enable	Global (CCR) Mask
EEPROM address, data, and command buffers empty	CBEIF (ESTAT register)	CBEIE (ECNFG register)	I Bit
All EEPROM commands completed	CCIF (ESTAT register)	CCIE (ECNFG register)	I Bit

NOTE

Vector addresses and their relative interrupt priority are determined at the MCU level.

26.8.1 Description of EEPROM Interrupt Operation

The logic used for generating interrupts is shown in Figure 26-24.

The EEPROM module uses the CBEIF and CCIF flags in combination with the CBIE and CCIE enable bits to generate the EEPROM command interrupt request.

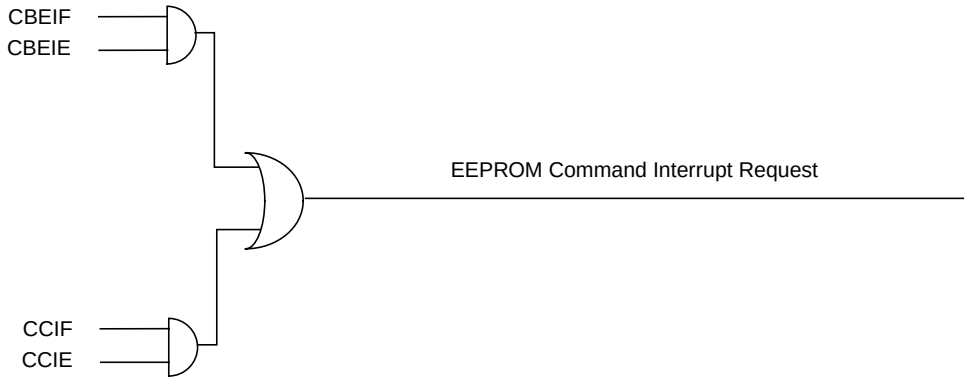

Figure 26-24. EEPROM Interrupt Implementation

For a detailed description of the register bits, refer to Section 26.3.2.4, “EEPROM Configuration Register (ECNFG)” and Section 26.3.2.6, “EEPROM Status Register (ESTAT)” .

Chapter 27
512 Kbyte Flash Module (S12XFTX512K4V2)

27.1 Introduction

This document describes the FTX512K4 module that includes a 512K Kbyte Flash (nonvolatile) memory. The Flash memory may be read as either bytes, aligned words or misaligned words. Read access time is one bus cycle for bytes and aligned words, and two bus cycles for misaligned words.

The Flash memory is ideal for program and data storage for single-supply applications allowing for field reprogramming without requiring external voltage sources for program or erase. Program and erase functions are controlled by a command driven interface. The Flash module supports both block erase and sector erase. An erased bit reads 1 and a programmed bit reads 0. The high voltage required to program and erase the Flash memory is generated internally. It is not possible to read from a Flash block while it is being erased or programmed.

CAUTION

A Flash word must be in the erased state before being programmed.
Cumulative programming of bits within a Flash word is not allowed.

27.1.1 Glossary

Command Write Sequence — A three-step MCU instruction sequence to execute built-in algorithms (including program and erase) on the Flash memory.

Multiple-Input Signature Register (MISR) — A Multiple-Input Signature Register is an output response analyzer implemented using a linear feedback shift-register (LFSR). A 16-bit MISR is used to compress data and generate a signature that is particular to the data read from a Flash block.

27.1.2 Features

- 512 Kbytes of Flash memory comprised of four 128 Kbyte blocks with each block divided into 128 sectors of 1024 bytes
- Automated program and erase algorithm
- Interrupts on Flash command completion, command buffer empty
- Fast sector erase and word program operation
- 2-stage command pipeline for faster multi-word program times
- Sector erase abort feature for critical interrupt response
- Flexible protection scheme to prevent accidental program or erase
- Single power supply for all Flash operations including program and erase

- Security feature to prevent unauthorized access to the Flash memory
- Code integrity check using built-in data compression

27.1.3 Modes of Operation

Program, erase, erase verify, and data compress operations (please refer to Section 27.4.1, “Flash Command Operations” for details).

27.1.4 Block Diagram

A block diagram of the Flash module is shown in Figure 27-1.

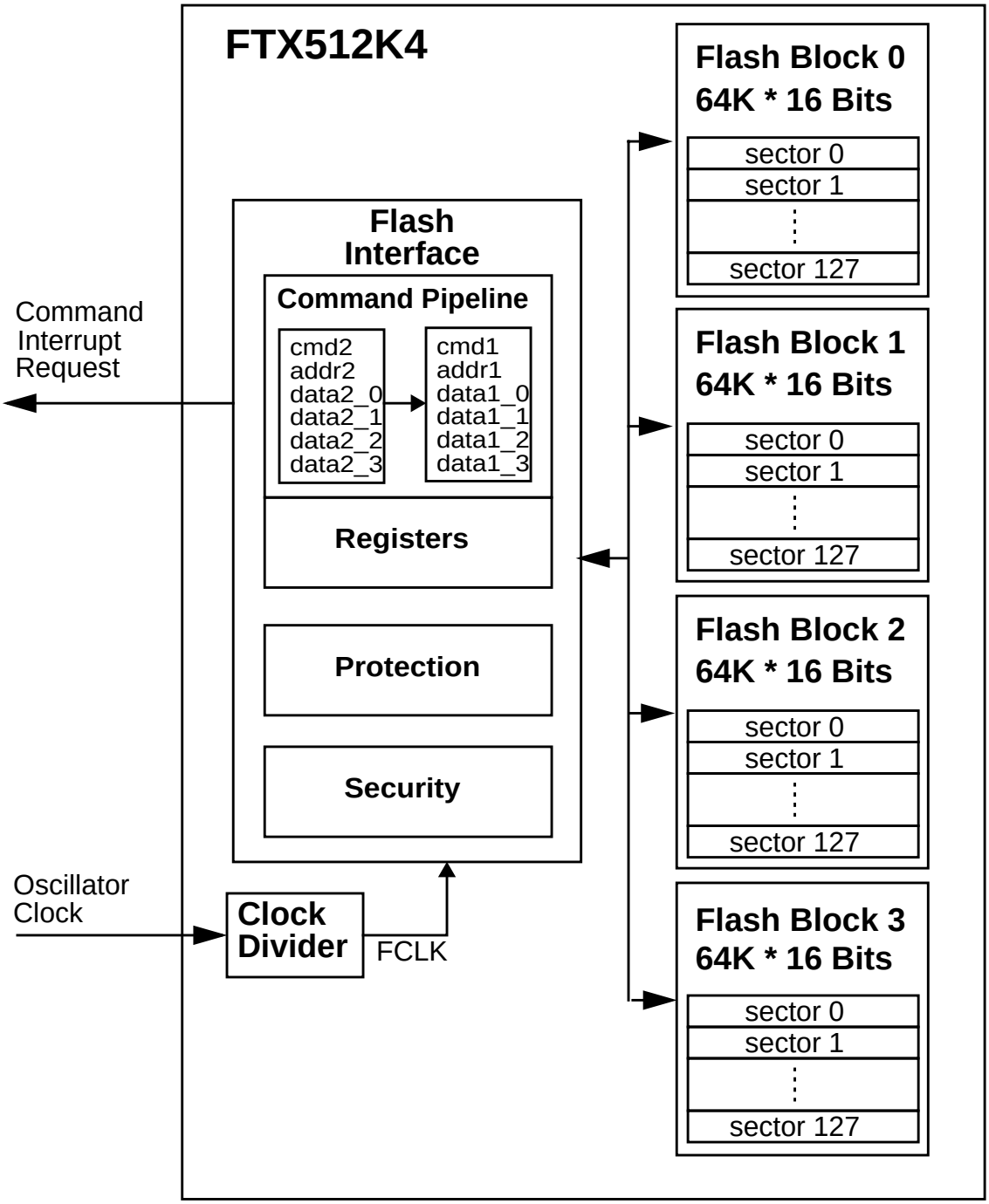

Figure 27-1. FTX512K4 Block Diagram

27.2 External Signal Description

The Flash module contains no signals that connect off-chip.

27.3 Memory Map and Register Definition

This section describes the memory map and registers for the Flash module.

27.3.1 Module Memory Map

The Flash memory map is shown in Figure 27-2. The HCS12X architecture places the Flash memory addresses between global addresses 0x78_0000 and 0x7F_FFFF. The FPROT register, described in Section 27.3.2.5, “Flash Protection Register (FPROT)”, can be set to protect regions in the Flash memory from accidental program or erase. Three separate memory regions, one growing upward from global address 0x7F_8000 in the Flash memory (called the lower region), one growing downward from global address 0x7F_FFFF in the Flash memory (called the higher region), and the remaining addresses in the Flash memory, can be activated for protection. The Flash memory addresses covered by these protectable regions are shown in the Flash memory map. The higher address region is mainly targeted to hold the boot loader code since it covers the vector space. The lower address region can be used for EEPROM emulation in an MCU without an EEPROM module since it can be left unprotected while the remaining addresses are protected from program or erase. Default protection settings as well as security information that allows the MCU to restrict access to the Flash module are stored in the Flash configuration field as described in Table 27-1.

Table 27-1. Flash Configuration Field

Global Address	Size (Bytes)	Description
0x7F_FF00 – 0x7F_FF07	8	Backdoor Comparison Key Refer to Section 27.6.1, “Unsecuring the MCU using Backdoor Key Access”
0x7F_FF08 – 0x7F_FF0C	5	Reserved
0x7F_FF0D	1	Flash Protection byte Refer to Section 27.3.2.5, “Flash Protection Register (FPROT)”
0x7F_FF0E	1	Flash Nonvolatile byte Refer to Section 27.3.2.8, “Flash Control Register (FCTL)”
0x7F_FF0F	1	Flash Security byte Refer to Section 27.3.2.2, “Flash Security Register (FSEC)”

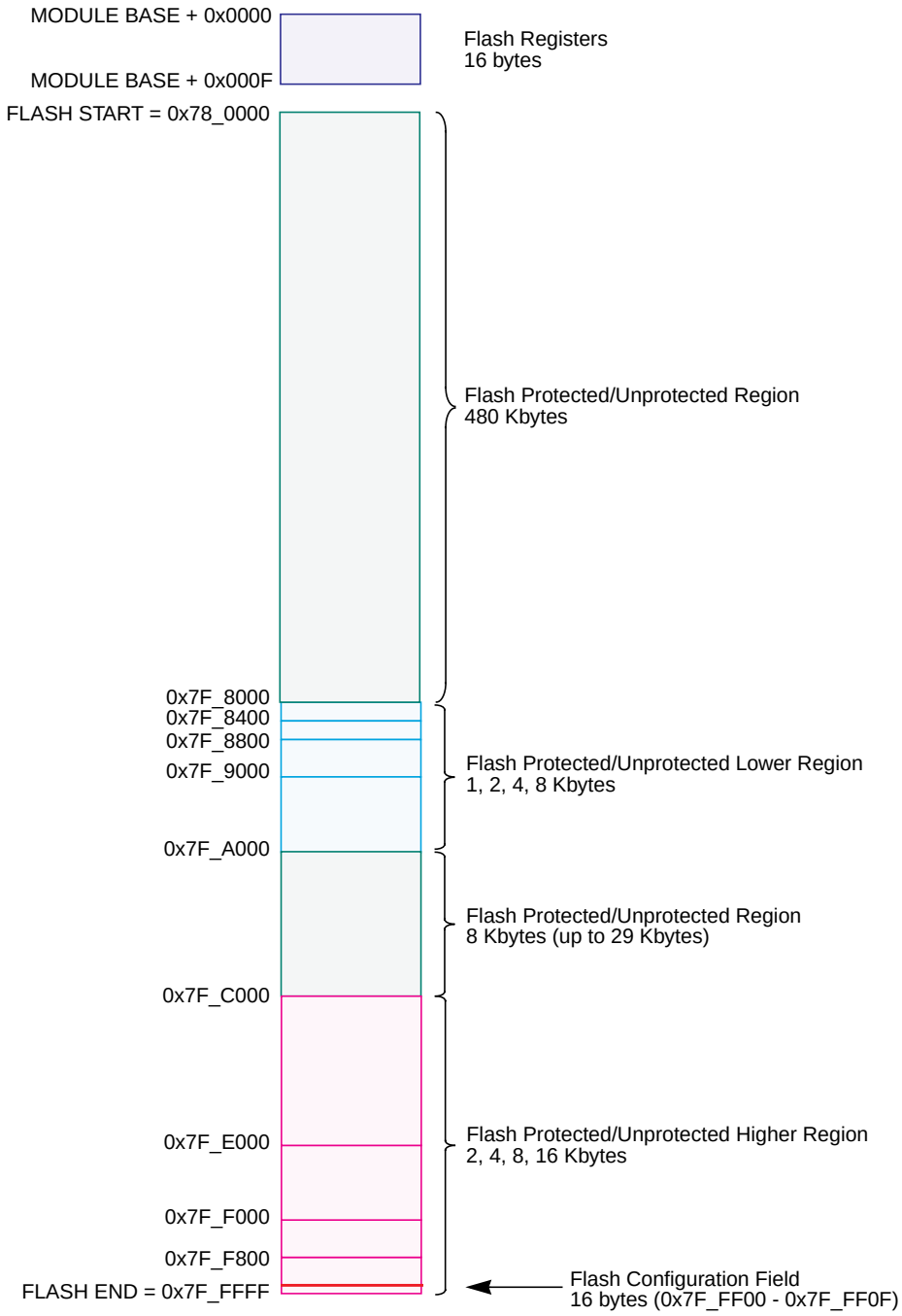

Figure 27-2. Flash Memory Map

The Flash module also contains a set of 16 control and status registers located between module base + 0x0000 and 0x000F. A summary of the Flash module registers is given in Table 27-2 while their accessibility is detailed in Section 27.3.2, “Register Descriptions”.

Table 27-2. Flash Register Map

Module Base +	Register Name	Normal Mode Access
0x0000	Flash Clock Divider Register (FCLKDIV)	R/W
0x0001	Flash Security Register (FSEC)	R
0x0002	Flash Test Mode Register (FTSTMOD)	R/W
0x0003	Flash Configuration Register (FCNFG)	R/W
0x0004	Flash Protection Register (FPROT)	R/W
0x0005	Flash Status Register (FSTAT)	R/W
0x0006	Flash Command Register (FCMD)	R/W
0x0007	Flash Control Register (FCTL)	R
0x0008	Flash High Address Register (FADDRHI)[1]	R
0x0009	Flash Low Address Register (FADDRLO)[1]	R
0x000A	Flash High Data Register (FDATAHI)	R
0x000B	Flash Low Data Register (FDATALO)	R
0x000C	RESERVED1[1]	R
0x000D	RESERVED2[1]	R
0x000E	RESERVED3[1]	R
0x000F	RESERVED4[1]	R

1 Intended for factory test purposes only.

27.3.2 Register Descriptions

Register Name		Bit 7	6	5	4	3	2	1	Bit 0
FCLKDIV	R	FDIVLD	PRDIV8	FDIV5	FDIV4	FDIV3	FDIV2	FDIV1	FDIV0
	W								
FSEC	R	KEYEN		RNV5	RNV4	RNV3	RNV2	SEC	
	W								
FTSTMOD	R	0	MRDS		0	0	0	0	0
	W								
FCNFG	R	CBEIE	CCIE	KEYACC	0	0	0	0	0
	W								
FPROT	R	FPOPEN	RNV6	FPHDIS	FPHS		FPLDIS	FPLS	
	W								
FSTAT	R	CBEIF	CCIF	PVIOL	ACCERR	0	BLANK	0	0
	W								
FCMD	R	0	CMDB						
	W								
FCTL	R	NV7	NV6	NV5	NV4	NV3	NV2	NV1	NV0
	W								
FADDRHI	R	FADDRHI							
	W								
FADDRLO	R	FADDRLO							
	W								
FDATAHI	R	FDATAHI							
	W								
FDATALO	R	FDATALO							
	W								
RESERVED1	R	0	0	0	0	0	0	0	0
	W								

Figure 27-3. FTX512K4 Register Summary

Register Name		Bit 7	6	5	4	3	2	1	Bit 0
RESERVED2	R	0	0	0	0	0	0	0	0
	W								
RESERVED3	R	0	0	0	0	0	0	0	0
	W								
RESERVED4	R	0	0	0	0	0	0	0	0
	W								

Figure 27-3. FTX512K4 Register Summary (continued)

27.3.2.1 Flash Clock Divider Register (FCLKDIV)

The FCLKDIV register is used to control timed events in program and erase algorithms.

	7	6	5	4	3	2	1	0
R	FDIVLD	PRDIV8	FDIV5	FDIV4	FDIV3	FDIV2	FDIV1	FDIV0
W								
Reset	0	0	0	0	0	0	0	0

= Unimplemented or Reserved

Figure 27-4. Flash Clock Divider Register (FCLKDIV)

All bits in the FCLKDIV register are readable, bits 6-0 are write once and bit 7 is not writable.

Table 27-3. FCLKDIV Field Descriptions

Field	Description
7 FDIVLD	**Clock Divider Loaded.** 0 Register has not been written. 1 Register has been written to since the last reset.
6 PRDIV8	**Enable Prescalar by 8.** 0 The oscillator clock is directly fed into the clock divider. 1 The oscillator clock is divided by 8 before feeding into the clock divider.
5-0 FDIV[5:0]	**Clock Divider Bits** — The combination of PRDIV8 and FDIV[5:0] must divide the oscillator clock down to a frequency of 150 kHz–200 kHz. The maximum divide ratio is 512. Please refer to Section 27.4.1.1, “Writing the FCLKDIV Register” for more information.

27.3.2.2 Flash Security Register (FSEC)

The FSEC register holds all bits associated with the security of the MCU and Flash module.

	7	6	5	4	3	2	1	0
R	KEYEN		RNV5	RNV4	RNV3	RNV2	SEC	
W								
Reset	F	F	F	F	F	F	F	F

= Unimplemented or Reserved

Figure 27-5. Flash Security Register (FSEC)

All bits in the FSEC register are readable but are not writable.

The FSEC register is loaded from the Flash Configuration Field at address 0x7F_FF0F during the reset sequence, indicated by F in Figure 27-5.

Table 27-4. FSEC Field Descriptions

Field	Description
7-6 KEYEN[1:0]	**Backdoor Key Security Enable Bits** — The KEYEN[1:0] bits define the enabling of backdoor key access to the Flash module as shown in Table 27-5.
5-2 RNV[5:2]	**Reserved Nonvolatile Bits** — The RNV[5:2] bits should remain in the erased state for future enhancements.
1-0 SEC[1:0]	**Flash Security Bits** — The SEC[1:0] bits define the security state of the MCU as shown in Table 27-6. If the Flash module is unsecured using backdoor key access, the SEC[1:0] bits are forced to 1:0.

Table 27-5. Flash KEYEN States

KEYEN[1:0]	Status of Backdoor Key Access
00	DISABLED
01[1]	DISABLED
10	ENABLED
11	DISABLED

1 Preferred KEYEN state to disable Backdoor Key Access.

Table 27-6. Flash Security States

SEC[1:0]	Status of Security
00	SECURED
01[1]	SECURED
10	UNSECURED
11	SECURED

1 Preferred SEC state to set MCU to secured state.

The security function in the Flash module is described in Section 27.6, “Flash Module Security”.

27.3.2.3 Flash Test Mode Register (FTSTMOD)

The FTSTMOD register is used to control Flash test features.

	7	6	5	4	3	2	1	0
R	0	MRDS		0	0	0	0	0
W								
Reset	0	0	0	0	0	0	0	0

= Unimplemented or Reserved

Figure 27-6. Flash Test Mode Register (FTSTMOD —Normal Mode)

	7	6	5	4	3	2	1	0
R	0	MRDS		WRALL	0	0	0	0
W								
Reset	0	0	0	0	0	0	0	0

= Unimplemented or Reserved

Figure 27-7. Flash Test Mode Register (FTSTMOD — Special Mode)

MRDS bits are readable and writable while all remaining bits read 0 and are not writable in normal mode. The WRALL bit is writable only in special mode to simplify mass erase and erase verify operations. When writing to the FTSTMOD register in special mode, all unimplemented/reserved bits must be written to 0.

Table 27-7. FTSTMOD Field Descriptions

Field	Description
6–5 MRDS[1:0]	**Margin Read Setting** — The MRDS[1:0] bits are used to set the sense-amp margin level for reads of the Flash array as shown in Table 27-8.
4 WRALL	**Write to all Register Banks** — If the WRALL bit is set, all banked FDATA registers sharing the same register address will be written simultaneously during a register write. 0 Write only to the FDATA register bank selected using BKSEL. 1 Write to all FDATA register banks.

Table 27-8. FTSTMOD Margin Read Settings

MRDS[1:0]	Margin Read Setting
00	Normal
01	Program Margin[1]
10	Erase Margin[2]
11	Normal

1 Flash array reads will be sensitive to program margin.
2 Flash array reads will be sensitive to erase margin.

27.3.2.4 Flash Configuration Register (FCNFG)

The FCNFG register enables the Flash interrupts and gates the security backdoor writes.

	7	6	5	4	3	2	1	0
R	CBEIE	CCIE	KEYACC	0	0	0	0	0
W								
Reset	0	0	0	0	0	0	0	0

= Unimplemented or Reserved

Figure 27-8. Flash Configuration Register (FCNFG — Normal Mode)

	7	6	5	4	3	2	1	0
R	CBEIE	CCIE	KEYACC	0	0	0	BKSEL	
W								
Reset	0	0	0	0	0	0	0	0

= Unimplemented or Reserved

Figure 27-9. Flash Configuration Register (FCNFG — Special Mode)

CBEIE, CCIE and KEYACC bits are readable and writable while all remaining bits read 0 and are not writable in normal mode. KEYACC is only writable if KEYEN (see Section 27.3.2.2, “Flash Security Register (FSEC)” is set to the enabled state. BKSEL is readable and writable in special mode to simplify mass erase and erase verify operations. When writing to the FCNFG register in special mode, all unimplemented/ reserved bits must be written to 0.

Table 27-9. FCNFG Field Descriptions

Field	Description
7 CBEIE	**Command Buffer Empty Interrupt Enable** — The CBEIE bit enables an interrupt in case of an empty command buffer in the Flash module. 0 Command buffer empty interrupt disabled. 1 An interrupt will be requested whenever the CBEIF flag (see Section 27.3.2.6, “Flash Status Register (FSTAT)”) is set.
6 CCIE	**Command Complete Interrupt Enable** — The CCIE bit enables an interrupt in case all commands have been completed in the Flash module. 0 Command complete interrupt disabled. 1 An interrupt will be requested whenever the CCIF flag (see Section 27.3.2.6, “Flash Status Register (FSTAT)”) is set.
5 KEYACC	**Enable Security Key Writing** 0 Flash writes are interpreted as the start of a command write sequence. 1 Writes to Flash array are interpreted as keys to open the backdoor. Reads of the Flash array return invalid data.
1–0 BKSEL[1:0]	**Block Select** — The BKSEL[1:0] bits indicates which register bank is active according to Table 27-10.

Table 27-10. Flash Register Bank Selects

BKSEL[1:0]	Selected Block
00	Flash Block 0
01	Flash Block 1

Table 27-10. Flash Register Bank Selects

BKSEL[1:0]	Selected Block
10	Flash Block 2
11	Flash Block 3

27.3.2.5 Flash Protection Register (FPROT)

The FPROT register defines which Flash sectors are protected against program or erase operations.

	7	6	5	4	3	2	1	0
R	FPOPEN	RNV6	FPHDIS	FPHS		FPLDIS	FPLS	
W								
Reset	F	F	F	F	F	F	F	F

= Unimplemented or Reserved

Figure 27-10. Flash Protection Register (FPROT)

All bits in the FPROT register are readable and writable with restrictions (see Section 27.3.2.5.1, “Flash Protection Restrictions”) except for RNV[6] which is only readable.

During the reset sequence, the FPROT register is loaded from the Flash Configuration Field at global address 0x7F_FF0D. To change the Flash protection that will be loaded during the reset sequence, the upper sector of the Flash memory must be unprotected, then the Flash Protect/Security byte located as described in Table 27-1 must be reprogrammed.

Trying to alter data in any protected area in the Flash memory will result in a protection violation error and the PVIOL flag will be set in the FSTAT register. The mass erase of a Flash block is not possible if any of the Flash sectors contained in the Flash block are protected.

Table 27-11. FPROT Field Descriptions

Field	Description
7 FPOPEN	**Flash Protection Open** — The FPOPEN bit determines the protection function for program or erase as shown in Table 27-12. 0 The FPHDIS and FPLDIS bits define unprotected address ranges as specified by the corresponding FPHS[1:0] and FPLS[1:0] bits. For an MCU without an EEPROM module, the FPOPEN clear state allows the main part of the Flash block to be protected while a small address range can remain unprotected for EEPROM emulation. 1 The FPHDIS and FPLDIS bits enable protection for the address range specified by the corresponding FPHS[1:0] and FPLS[1:0] bits.
6 RNV6	**Reserved Nonvolatile Bit** — The RNV[6] bit should remain in the erased state for future enhancements.
5 FPHDIS	**Flash Protection Higher Address Range Disable** — The FPHDIS bit determines whether there is a protected/unprotected area in a specific region of the Flash memory ending with global address 0x7F_FFFF. 0 Protection/Unprotection enabled. 1 Protection/Unprotection disabled.
4–3 FPHS[1:0]	**Flash Protection Higher Address Size** — The FPHS[1:0] bits determine the size of the protected/unprotected area as shown inTable 27-13. The FPHS[1:0] bits can only be written to while the FPHDIS bit is set.

Table 27-11. FPROT Field Descriptions (continued)

Field	Description
2 FPLDIS	**Flash Protection Lower Address Range Disable** — The FPLDIS bit determines whether there is a protected/unprotected area in a specific region of the Flash memory beginning with global address 0x7F_8000. 0 Protection/Unprotection enabled. 1 Protection/Unprotection disabled.
1–0 FPLS[1:0]	**Flash Protection Lower Address Size** — The FPLS[1:0] bits determine the size of the protected/unprotected area as shown in Table 27-14. The FPLS[1:0] bits can only be written to while the FPLDIS bit is set.

Table 27-12. Flash Protection Function

FPOPEN	FPHDIS	FPLDIS	Function[1]
1	1	1	No Protection
1	1	0	Protected Low Range
1	0	1	Protected High Range
1	0	0	Protected High and Low Ranges
0	1	1	Full Flash memory Protected
0	1	0	Unprotected Low Range
0	0	1	Unprotected High Range
0	0	0	Unprotected High and Low Ranges

1 For range sizes, refer to Table 27-13 and Table 27-14.

Table 27-13. Flash Protection Higher Address Range

FPHS[1:0]	Global Address Range	Protected Size
00	0x7F_F800–0x7F_FFFF	2 Kbytes
01	0x7F_F000–0x7F_FFFF	4 Kbytes
10	0x7F_E000–0x7F_FFFF	8 Kbytes
11	0x7F_C000–0x7F_FFFF	16 Kbytes

Table 27-14. Flash Protection Lower Address Range

FPLS[1:0]	Global Address Range	Protected Size
00	0x7F_8000–0x7F_83FF	1 Kbytes
01	0x7F_8000–0x7F_87FF	2 Kbytes
10	0x7F_8000–0x7F_8FFF	4 Kbytes
11	0x7F_8000–0x7F_9FFF	8 Kbytes

All possible Flash protection scenarios are shown in Figure 27-11. Although the protection scheme is loaded from the Flash array at global address 0x7F_FF0D during the reset sequence, it can be changed by the user. This protection scheme can be used by applications requiring re-programming in single chip mode while providing as much protection as possible if re-programming is not required.

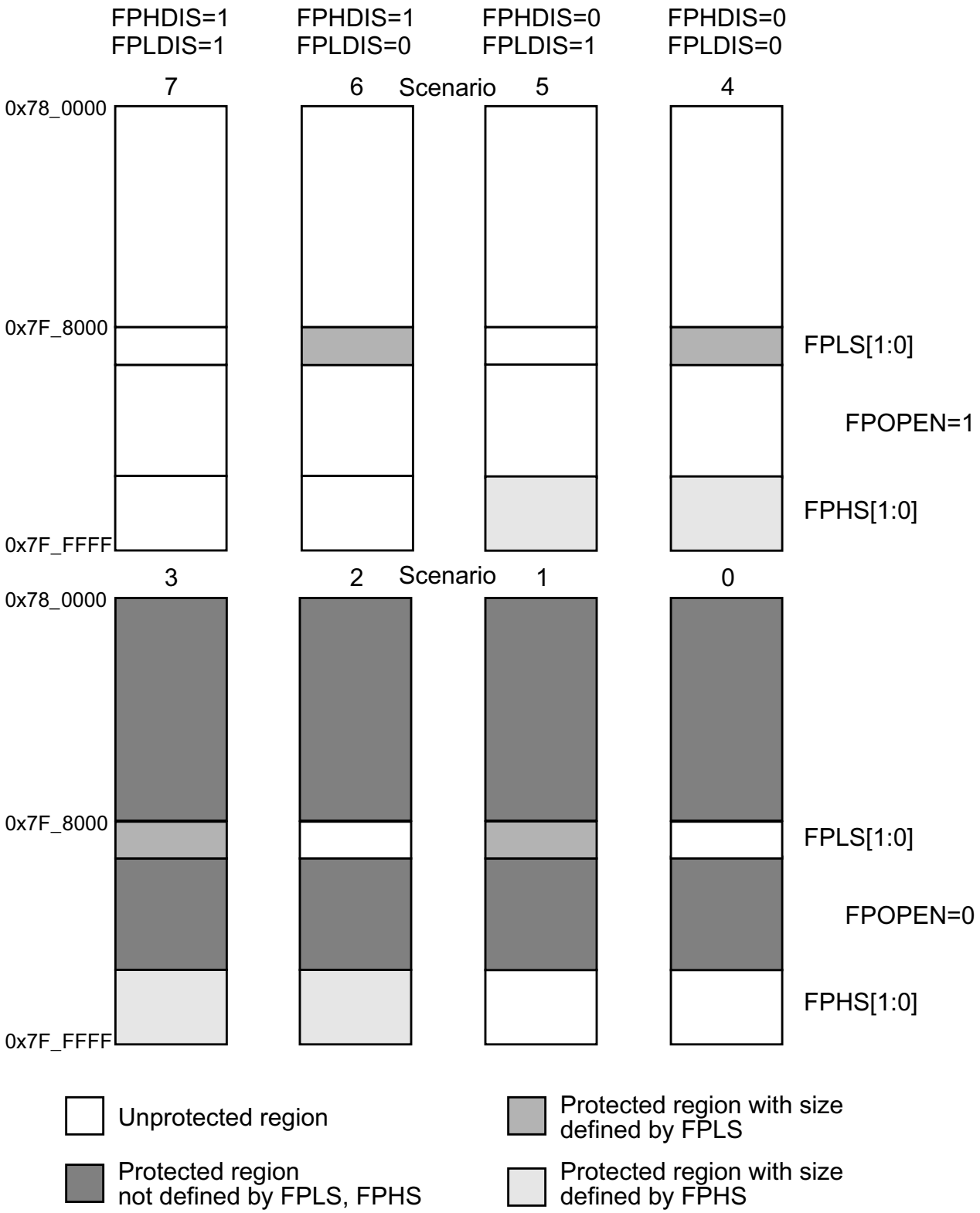

Figure 27-11. Flash Protection Scenarios

27.3.2.5.1 Flash Protection Restrictions

The general guideline is that Flash protection can only be added and not removed. Table 27-15 specifies all valid transitions between Flash protection scenarios. Any attempt to write an invalid scenario to the FPROT register will be ignored and the FPROT register will remain unchanged. The contents of the FPROT register reflect the active protection scenario. See the FPHS and FPLS descriptions for additional restrictions.

Table 27-15. Flash Protection Scenario Transitions

From Protection Scenario	To Protection Scenario[1]							
	0	**1**	**2**	**3**	**4**	**5**	**6**	**7**
0	X	X	X	X				
1		X		X				
2			X	X				
3				X				
4				X	X			
5			X	X	X	X		
6		X		X	X		X	
7	X	X	X	X	X	X	X	X

1 Allowed transitions marked with X.

27.3.2.6 Flash Status Register (FSTAT)

The FSTAT register defines the operational status of the module.

	7	6	5	4	3	2	1	0
R	CBEIF	CCIF	PVIOL	ACCERR	0	BLANK	0	0
W								
Reset	1	1	0	0	0	0	0	0

= Unimplemented or Reserved

Figure 27-12. Flash Status Register (FSTAT — Normal Mode)

	7	6	5	4	3	2	1	0
R	CBEIF	CCIF	PVIOL	ACCERR	0	BLANK	FAIL	0
W								
Reset	1	1	0	0	0	0	0	0

= Unimplemented or Reserved

Figure 27-13. Flash Status Register (FSTAT — Special Mode)

CBEIF, PVIOL, and ACCERR are readable and writable, CCIF and BLANK are readable and not writable, remaining bits read 0 and are not writable in normal mode. FAIL is readable and writable in special mode. FAIL must be clear in special mode when starting a command write sequence.

Table 27-16. FSTAT Field Descriptions

Field	Description
7 CBEIF	**Command Buffer Empty Interrupt Flag** — The CBEIF flag indicates that the address, data and command buffers are empty so that a new command write sequence can be started. Writing a 0 to the CBEIF flag has no effect on CBEIF. Writing a 0 to CBEIF after writing an aligned word to the Flash address space, but before CBEIF is cleared, will abort a command write sequence and cause the ACCERR flag to be set. Writing a 0 to CBEIF outside of a command write sequence will not set the ACCERR flag. The CBEIF flag is cleared by writing a 1 to CBEIF. The CBEIF flag is used together with the CBEIE bit in the FCNFG register to generate an interrupt request (see Figure 27-32). 0 Command buffers are full. 1 Command buffers are ready to accept a new command.
6 CCIF	**Command Complete Interrupt Flag** — The CCIF flag indicates that there are no more commands pending. The CCIF flag is cleared when CBEIF is cleared and sets automatically upon completion of all active and pending commands. The CCIF flag does not set when an active commands completes and a pending command is fetched from the command buffer. Writing to the CCIF flag has no effect on CCIF. The CCIF flag is used together with the CCIE bit in the FCNFG register to generate an interrupt request (see Figure 27-32). 0 Command in progress. 1 All commands are completed.
5 PVIOL	**Protection Violation Flag** —The PVIOL flag indicates an attempt was made to program or erase an address in a protected area of the Flash memory during a command write sequence. Writing a 0 to the PVIOL flag has no effect on PVIOL. The PVIOL flag is cleared by writing a 1 to PVIOL. While PVIOL is set, it is not possible to launch a command or start a command write sequence. 0 No protection violation detected. 1 Protection violation has occurred.
4 ACCERR	**Access Error Flag** — The ACCERR flag indicates an illegal access has occurred to the Flash memory caused by either a violation of the command write sequence (see Section 27.4.1.2, “Command Write Sequence”), issuing an illegal Flash command (see Table 27-18), launching the sector erase abort command terminating a sector erase operation early (see Section 27.4.2.6, “Sector Erase Abort Command”) or the execution of a CPU STOP instruction while a command is executing (CCIF = 0). Writing a 0 to the ACCERR flag has no effect on ACCERR. The ACCERR flag is cleared by writing a 1 to ACCERR.While ACCERR is set, it is not possible to launch a command or start a command write sequence. If ACCERR is set by an erase verify operation or a data compress operation, any buffered command will not launch. 0 No access error detected. 1 Access error has occurred.
2 BLANK	**Flag Indicating the Erase Verify Operation Status** — When the CCIF flag is set after completion of an erase verify command, the BLANK flag indicates the result of the erase verify operation. The BLANK flag is cleared by the Flash module when CBEIF is cleared as part of a new valid command write sequence. Writing to the BLANK flag has no effect on BLANK. 0 Flash block verified as not erased. 1 Flash block verified as erased.
1 FAIL	**Flag Indicating a Failed Flash Operation** — The FAIL flag will set if the erase verify operation fails (selected Flash block verified as not erased). Writing a 0 to the FAIL flag has no effect on FAIL. The FAIL flag is cleared by writing a 1 to FAIL. 0 Flash operation completed without error. 1 Flash operation failed.

27.3.2.7 Flash Command Register (FCMD)

The FCMD register is the Flash command register.

	7	6	5	4	3	2	1	0
R	0	CMDB						
W								
Reset	1	1	0	0	0	0	0	0

= Unimplemented or Reserved

Figure 27-14. Flash Command Register (FCMD)

All CMDB bits are readable and writable during a command write sequence while bit 7 reads 0 and is not writable.

Table 27-17. FCMD Field Descriptions

Field	Description
6-0 CMDB[6:0]	**Flash Command** — Valid Flash commands are shown in Table 27-18. Writing any command other than those listed in Table 27-18 sets the ACCERR flag in the FSTAT register.

Table 27-18. Valid Flash Command List

CMDB[6:0]	NVM Command
0x05	Erase Verify
0x06	Data Compress
0x20	Word Program
0x40	Sector Erase
0x41	Mass Erase
0x47	Sector Erase Abort

27.3.2.8 Flash Control Register (FCTL)

The FCTL register is the Flash control register.

	7	6	5	4	3	2	1	0
R	NV7	NV6	NV5	NV4	NV3	NV2	NV1	NV0
W								
Reset	F	F	F	F	F	F	F	F

= Unimplemented or Reserved

Figure 27-15. Flash Control Register (FCTL)

All bits in the FCTL register are readable but are not writable.

The FCTL register is loaded from the Flash Configuration Field byte at global address 0x7F_FF0E during the reset sequence, indicated by F in Figure 27-15.

Table 27-19. FCTL Field Descriptions

Field	Description
7-0 NV[7:0]	**Non volatile Bits** — The NV[7:0] bits are available as nonvolatile bits. Refer to the Device User Guide for proper use of the NV bits.

27.3.2.9 Flash Address Registers (FADDR)

The FADDRHI and FADDRLO registers are the Flash address registers.

	7	6	5	4	3	2	1	0
R	FADDRHI							
W								
Reset	0	0	0	0	0	0	0	0

= Unimplemented or Reserved

Figure 27-16. Flash Address High Register (FADDRHI)

	7	6	5	4	3	2	1	0
R	FADDRLO							
W								
Reset	0	0	0	0	0	0	0	0

= Unimplemented or Reserved

Figure 27-17. Flash Address Low Register (FADDRLO)

All FADDRHI and FADDRLO bits are readable but are not writable. After an array write as part of a command write sequence, the FADDR registers will contain the mapped MCU address written.

27.3.2.10 Flash Data Registers (FDATA)

The FDATAHI and FDATALO registers are the Flash data registers.

	7	6	5	4	3	2	1	0
R	FDATAHI							
W								
Reset	0	0	0	0	0	0	0	0

= Unimplemented or Reserved

Figure 27-18. Flash Data High Register (FDATAHI)

	7	6	5	4	3	2	1	0
R	FDATALO							
W								
Reset	0	0	0	0	0	0	0	0

= Unimplemented or Reserved

Figure 27-19. Flash Data Low Register (FDATALO)

All FDATAHI and FDATALO bits are readable but are not writable. At the completion of a data compress operation, the resulting 16-bit signature is stored in the FDATA registers. The data compression signature is readable in the FDATA registers until a new command write sequence is started.

27.3.2.11 RESERVED1

This register is reserved for factory testing and is not accessible.

	7	6	5	4	3	2	1	0
R	0	0	0	0	0	0	0	0
W								
Reset	0	0	0	0	0	0	0	0

= Unimplemented or Reserved

Figure 27-20. RESERVED1

All bits read 0 and are not writable.

27.3.2.12 RESERVED2

This register is reserved for factory testing and is not accessible.

	7	6	5	4	3	2	1	0
R	0	0	0	0	0	0	0	0
W								
Reset	0	0	0	0	0	0	0	0

= Unimplemented or Reserved

Figure 27-21. RESERVED2

All bits read 0 and are not writable.

27.3.2.13 RESERVED3

This register is reserved for factory testing and is not accessible.

	7	6	5	4	3	2	1	0
R	0	0	0	0	0	0	0	0
W								
Reset	0	0	0	0	0	0	0	0

= Unimplemented or Reserved

Figure 27-22. RESERVED3

All bits read 0 and are not writable.

27.3.2.14 RESERVED4

This register is reserved for factory testing and is not accessible.

	7	6	5	4	3	2	1	0
R	0	0	0	0	0	0	0	0
W								
Reset	0	0	0	0	0	0	0	0

= Unimplemented or Reserved

Figure 27-23. RESERVED4

All bits read 0 and are not writable.

27.4 Functional Description

27.4.1 Flash Command Operations

Write operations are used to execute program, erase, erase verify, erase abort, and data compress algorithms described in this section. The program and erase algorithms are controlled by a state machine whose timebase, FCLK, is derived from the oscillator clock via a programmable divider. The command register, as well as the associated address and data registers, operate as a buffer and a register (2-stage FIFO) so that a second command along with the necessary data and address can be stored to the buffer while the first command is still in progress. This pipelined operation allows a time optimization when programming more than one word on a specific row in the Flash block as the high voltage generation can be kept active in between two programming commands. The pipelined operation also allows a simplification of command launching. Buffer empty as well as command completion are signalled by flags in the Flash status register with corresponding interrupts generated, if enabled.

The next sections describe:

1. How to write the FCLKDIV register
2. Command write sequences to program, erase, erase verify, erase abort, and data compress operations on the Flash memory
3. Valid Flash commands
4. Effects resulting from illegal Flash command write sequences or aborting Flash operations

27.4.1.1 Writing the FCLKDIV Register

Prior to issuing any Flash command after a reset, the user is required to write the FCLKDIV register to divide the oscillator clock down to within the 150 kHz to 200 kHz range. Since the program and erase timings are also a function of the bus clock, the FCLKDIV determination must take this information into account.

If we define:

- FCLK as the clock of the Flash timing control block
- Tbus as the period of the bus clock
- INT(x) as taking the integer part of x (e.g. INT(4.323) = 4)

then FCLKDIV register bits PRDIV8 and FDIV[5:0] are to be set as described in Figure 27-24.

For example, if the oscillator clock frequency is 950kHz and the bus clock frequency is 10MHz, FCLKDIV bits FDIV[5:0] should be set to 0x04 (000100) and bit PRDIV8 set to 0. The resulting FCLK frequency is then 190kHz. As a result, the Flash program and erase algorithm timings are increased over the optimum target by:

$$(200 - 190)/200 \times 100 = 5\%$$

If the oscillator clock frequency is 16MHz and the bus clock frequency is 40MHz, FCLKDIV bits FDIV[5:0] should be set to 0x0A (001010) and bit PRDIV8 set to 1. The resulting FCLK frequency is then 182kHz. In this case, the Flash program and erase algorithm timings are increased over the optimum target by:

$$(200 - 182)/200 \times 100 = 9\%$$

CAUTION

Program and erase command execution time will increase proportionally with the period of FCLK. Because of the impact of clock synchronization on the accuracy of the functional timings, programming or erasing the Flash memory cannot be performed if the bus clock runs at less than 1 MHz. Programming or erasing the Flash memory with FCLK < 150 kHz should be avoided. Setting FCLKDIV to a value such that FCLK < 150 kHz can destroy the Flash memory due to overstress. Setting FCLKDIV to a value such that (1/FCLK+Tbus) < 5µs can result in incomplete programming or erasure of the Flash memory cells.

If the FCLKDIV register is written, the FDIVLD bit is set automatically. If the FDIVLD bit is 0, the FCLKDIV register has not been written since the last reset. If the FCLKDIV register has not been written to, the Flash command loaded during a command write sequence will not execute and the ACCERR flag in the FSTAT register will set.

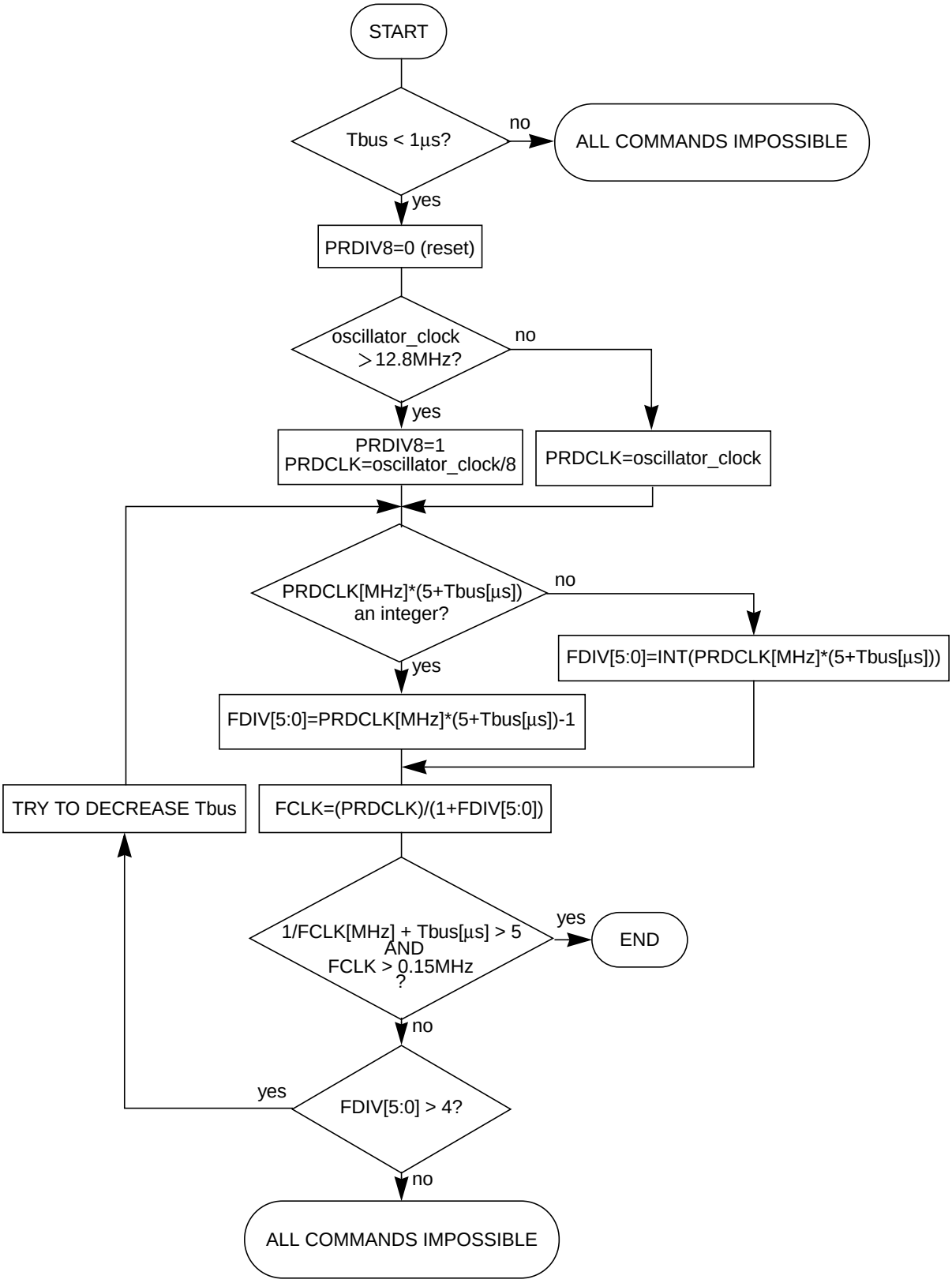

Figure 27-24. Determination Procedure for PRDIV8 and FDIV Bits

27.4.1.2 Command Write Sequence

The Flash command controller is used to supervise the command write sequence to execute program, erase, erase verify, erase abort, and data compress algorithms.

Before starting a command write sequence, the ACCERR and PVIOL flags in the FSTAT register must be clear (see Section 27.3.2.6, "Flash Status Register (FSTAT)") and the CBEIF flag should be tested to determine the state of the address, data and command buffers. If the CBEIF flag is set, indicating the buffers are empty, a new command write sequence can be started. If the CBEIF flag is clear, indicating the buffers are not available, a new command write sequence will overwrite the contents of the address, data and command buffers.

A command write sequence consists of three steps which must be strictly adhered to with writes to the Flash module not permitted between the steps. However, Flash register and array reads are allowed during a command write sequence. The basic command write sequence is as follows:

1. Write to a valid address in the Flash memory. Addresses in multiple Flash blocks can be written to as long as the location is at the same relative address in each available Flash block. Multiple addresses must be written in Flash block order starting with the lower Flash block.
2. Write a valid command to the FCMD register.
3. Clear the CBEIF flag in the FSTAT register by writing a 1 to CBEIF to launch the command.

The address written in step 1 will be stored in the FADDR registers and the data will be stored in the FDATA registers. If the CBEIF flag in the FSTAT register is clear when the first Flash array write occurs, the contents of the address and data buffers will be overwritten and the CBEIF flag will be set. When the CBEIF flag is cleared, the CCIF flag is cleared on the same bus cycle by the Flash command controller indicating that the command was successfully launched. For all command write sequences except data compress and sector erase abort, the CBEIF flag will set four bus cycles after the CCIF flag is cleared indicating that the address, data, and command buffers are ready for a new command write sequence to begin. For data compress and sector erase abort operations, the CBEIF flag will remain clear until the operation completes. Except for the sector erase abort command, a buffered command will wait for the active operation to be completed before being launched. The sector erase abort command is launched when the CBEIF flag is cleared as part of a sector erase abort command write sequence. Once a command is launched, the completion of the command operation is indicated by the setting of the CCIF flag in the FSTAT register. The CCIF flag will set upon completion of all active and buffered commands.

27.4.2 Flash Commands

Table 27-20 summarizes the valid Flash commands along with the effects of the commands on the Flash block.

Table 27-20. Flash Command Description

FCMDB	NVM Command	Function on Flash Memory
0x05	Erase Verify	Verify all memory bytes in the Flash block are erased. If the Flash block is erased, the BLANK flag in the FSTAT register will set upon command completion.

Table 27-20. Flash Command Description

FCMDB	NVM Command	Function on Flash Memory
0x06	Data Compress	Compress data from a selected portion of the Flash block. The resulting signature is stored in the FDATA register.
0x20	Program	Program a word (two bytes) in the Flash block.
0x40	Sector Erase	Erase all memory bytes in a sector of the Flash block.
0x41	Mass Erase	Erase all memory bytes in the Flash block. A mass erase of the full Flash block is only possible when FPLDIS, FPHDIS and FPOPEN bits in the FPROT register are set prior to launching the command.
0x47	Sector Erase Abort	Abort the sector erase operation. The sector erase operation will terminate according to a set procedure. The Flash sector should not be considered erased if the ACCERR flag is set upon command completion.

CAUTION

A Flash word must be in the erased state before being programmed. Cumulative programming of bits within a Flash word is not allowed.

27.4.2.1 Erase Verify Command

The erase verify operation will verify that a Flash block is erased.

An example flow to execute the erase verify operation is shown in Figure 27-25. The erase verify command write sequence is as follows:

1. Write to a Flash block address to start the command write sequence for the erase verify command. The address and data written will be ignored. Multiple Flash blocks can be simultaneously erase verified by writing to the same relative address in each Flash block.
2. Write the erase verify command, 0x05, to the FCMD register.
3. Clear the CBEIF flag in the FSTAT register by writing a 1 to CBEIF to launch the erase verify command.

After launching the erase verify command, the CCIF flag in the FSTAT register will set after the operation has completed unless a new command write sequence has been buffered. The number of bus cycles required to execute the erase verify operation is equal to the number of addresses in a Flash block plus 14 bus cycles as measured from the time the CBEIF flag is cleared until the CCIF flag is set. Upon completion of the erase verify operation, the BLANK flag in the FSTAT register will be set if all addresses in the selected Flash blocks are verified to be erased. If any address in a selected Flash block is not erased, the erase verify operation will terminate and the BLANK flag in the FSTAT register will remain clear. The MRDS bits in the FTSTMOD register will determine the sense-amp margin setting during the erase verify operation.

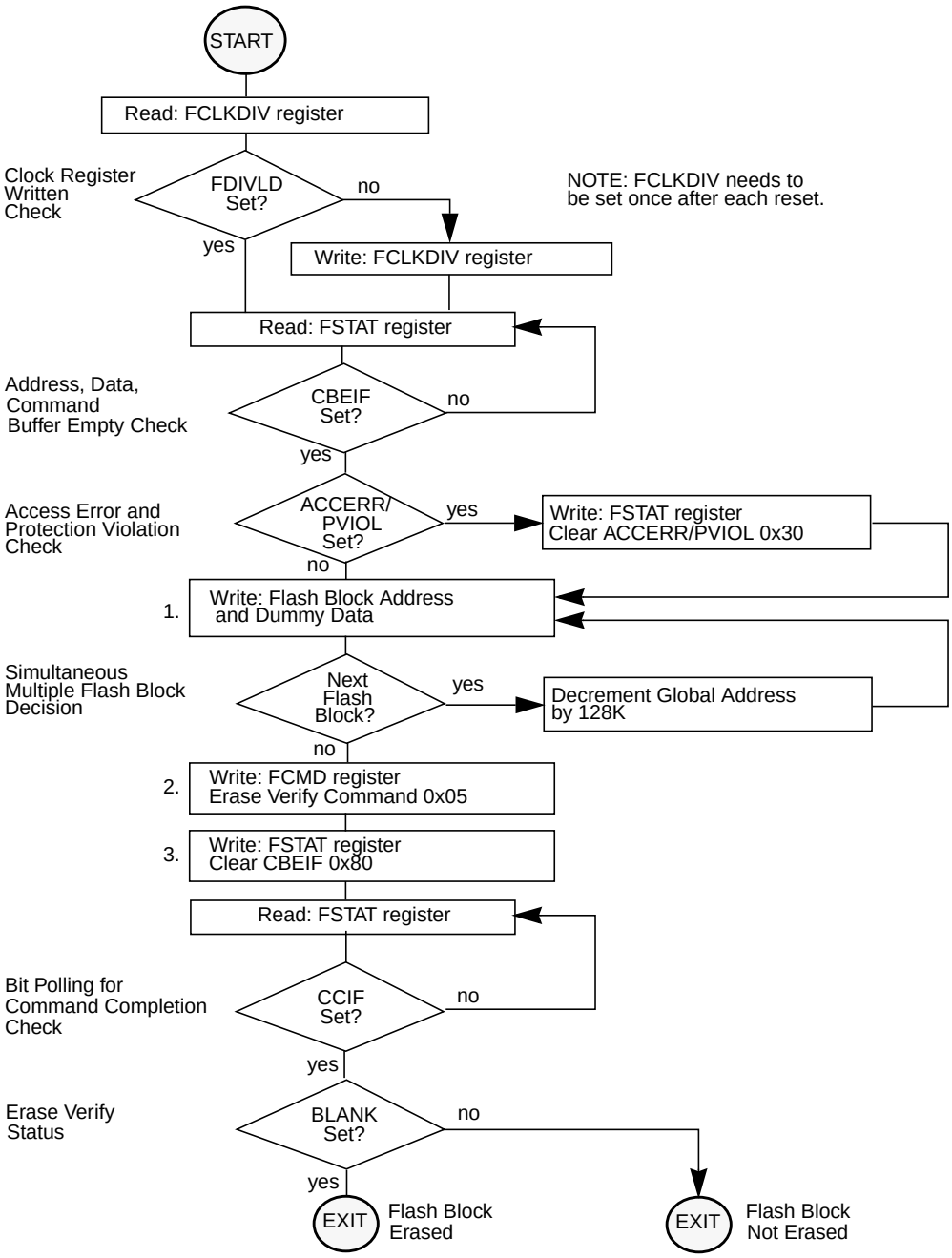

Figure 27-25. Example Erase Verify Command Flow

27.4.2.2 Data Compress Command

The data compress operation will check Flash code integrity by compressing data from a selected portion of the Flash memory into a signature analyzer.

An example flow to execute the data compress operation is shown in Figure 27-26. The data compress command write sequence is as follows:

1. Write to a Flash block address to start the command write sequence for the data compress command. The address written determines the starting address for the data compress operation and the data written determines the number of consecutive words to compress. If the data value written is 0x0000, 64K addresses or 128 Kbytes will be compressed. Multiple Flash blocks can be simultaneously compressed by writing to the same relative address in each Flash block. If more than one Flash block is written to in this step, the first data written will determine the number of consecutive words to compress in each selected Flash block.
2. Write the data compress command, 0x06, to the FCMD register.
3. Clear the CBEIF flag in the FSTAT register by writing a 1 to CBEIF to launch the data compress command.

After launching the data compress command, the CCIF flag in the FSTAT register will set after the data compress operation has completed. The number of bus cycles required to execute the data compress operation is equal to two times the number of consecutive words to compress plus the number of Flash blocks simultaneously compressed plus 18 bus cycles as measured from the time the CBEIF flag is cleared until the CCIF flag is set. Once the CCIF flag is set, the signature generated by the data compress operation is available in the FDATA registers. The signature in the FDATA registers can be compared to the expected signature to determine the integrity of the selected data stored in the selected Flash memory. If the last address of a Flash block is reached during the data compress operation, data compression will continue with the starting address of the same Flash block. The MRDS bits in the FTSTMOD register will determine the sense-amp margin setting during the data compress operation.

NOTE

Since the FDATA registers (or data buffer) are written to as part of the data compress operation, a command write sequence is not allowed to be buffered behind a data compress command write sequence. The CBEIF flag will not set after launching the data compress command to indicate that a command should not be buffered behind it. If an attempt is made to start a new command write sequence with a data compress operation active, the ACCERR flag in the FSTAT register will be set. A new command write sequence should only be started after reading the signature stored in the FDATA registers.

In order to take corrective action, it is recommended that the data compress command be executed on a Flash sector or subset of a Flash sector. If the data compress operation on a Flash sector returns an invalid signature, the Flash sector should be erased using the sector erase command and then reprogrammed using the program command.

The data compress command can be used to verify that a sector or sequential set of sectors are erased.

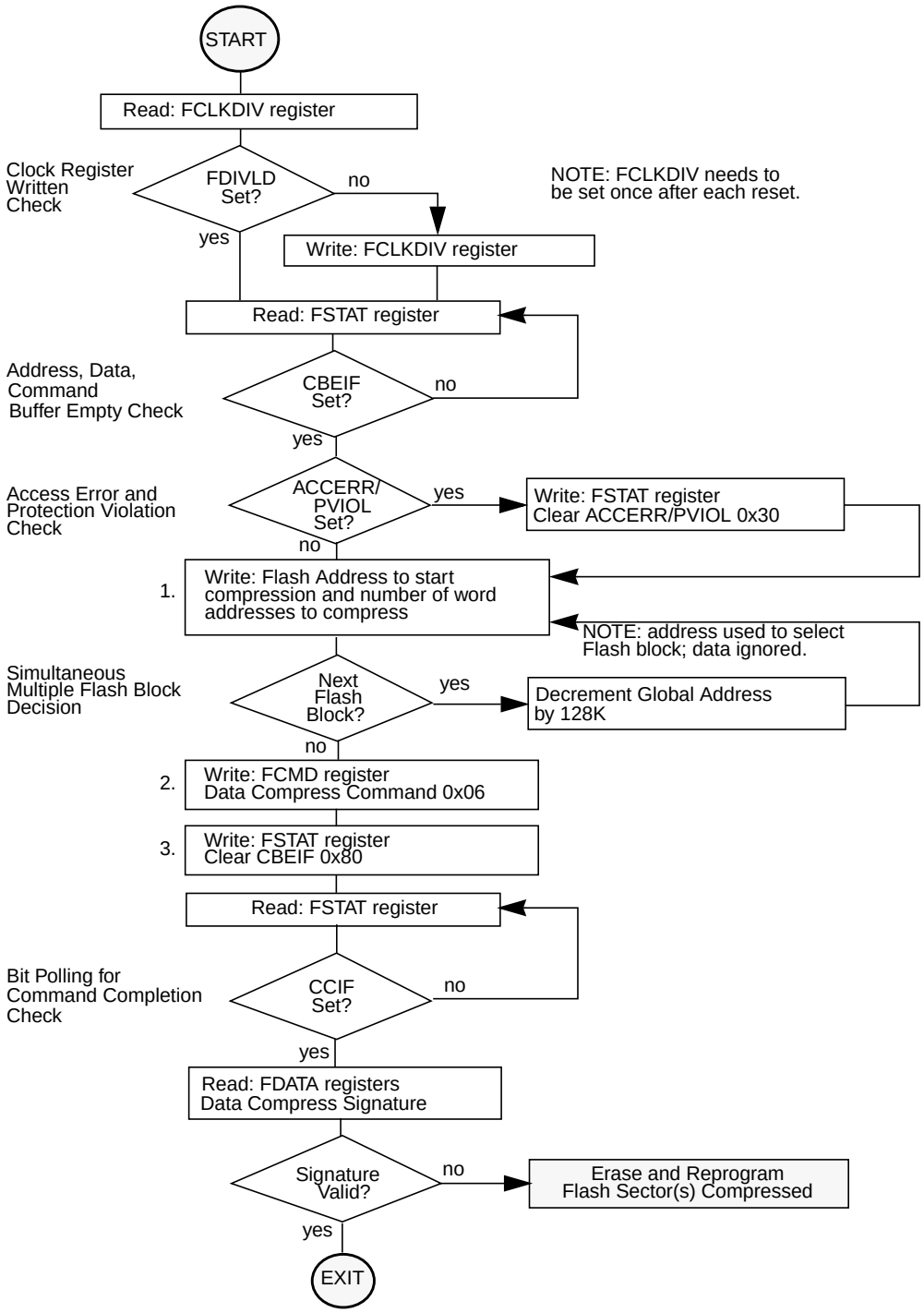

Figure 27-26. Example Data Compress Command Flow

27.4.2.2.1 Data Compress Operation

The Flash module contains a 16-bit multiple-input signature register (MISR) for each Flash block to generate a 16-bit signature based on selected Flash array data. If multiple Flash blocks are selected for simultaneous compression, then the signature from each Flash block is further compressed to generate a single 16-bit signature. The final 16-bit signature, found in the FDATA registers after the data compress operation has completed, is based on the following logic equation which is executed on every data compression cycle during the operation:

MISR[15:0] = {MISR[14:0], ^MISR[15,4,2,1]} ^ DATA[15:0] ***Eqn. 27-1***

where MISR is the content of the internal signature register associated with each Flash block and DATA is the data to be compressed as shown in Figure 27-27.

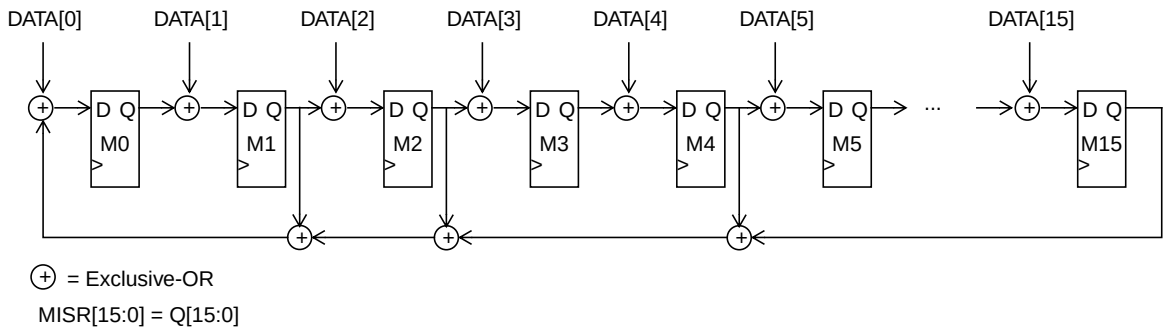

Figure 27-27. 16-Bit MISR Diagram

During the data compress operation, the following steps are executed:

1. MISR for each Flash block is reset to 0xFFFF.
2. Initialized DATA equal to 0xFFFF is compressed into the MISR for each selected Flash block which results in the MISR containing 0x0001.
3. DATA equal to the selected Flash array data range is read and compressed into the MISR for each selected Flash block with addresses incrementing.
4. DATA equal to the selected Flash array data range is read and compressed into the MISR for each selected Flash block with addresses decrementing.
5. If Flash block 0 is selected for compression, DATA equal to the contents of the MISR for Flash block 0 is compressed into the MISR for Flash block 0. If data in Flash block 0 was not selected for compression, the MISR for Flash block 0 contains 0xFFFF.
6. If Flash block 1 is selected for compression, DATA equal to the contents of the MISR for Flash block 1 is compressed into the MISR for Flash block 0.
7. If Flash block 2 is selected for compression, DATA equal to the contents of the MISR for Flash block 2 is compressed into the MISR for Flash block 0.
8. If Flash block 3 is selected for compression, DATA equal to the contents of the MISR for Flash block 3 is compressed into the MISR for Flash block 0.
9. The contents of the MISR for Flash block 0 are written to the FDATA registers.

27.4.2.3 Program Command

The program operation will program a previously erased word in the Flash memory using an embedded algorithm.

An example flow to execute the program operation is shown in Figure 27-28. The program command write sequence is as follows:

1. Write to a Flash block address to start the command write sequence for the program command. The data written will be programmed to the address written. Multiple Flash blocks can be simultaneously programmed by writing to the same relative address in each Flash block.
2. Write the program command, 0x20, to the FCMD register.
3. Clear the CBEIF flag in the FSTAT register by writing a 1 to CBEIF to launch the program command.

If a word to be programmed is in a protected area of the Flash block, the PVIOL flag in the FSTAT register will set and the program command will not launch. Once the program command has successfully launched, the CCIF flag in the FSTAT register will set after the program operation has completed unless a new command write sequence has been buffered. By executing a new program command write sequence on sequential words after the CBEIF flag in the FSTAT register has been set, up to 55% faster programming time per word can be effectively achieved than by waiting for the CCIF flag to set after each program operation.

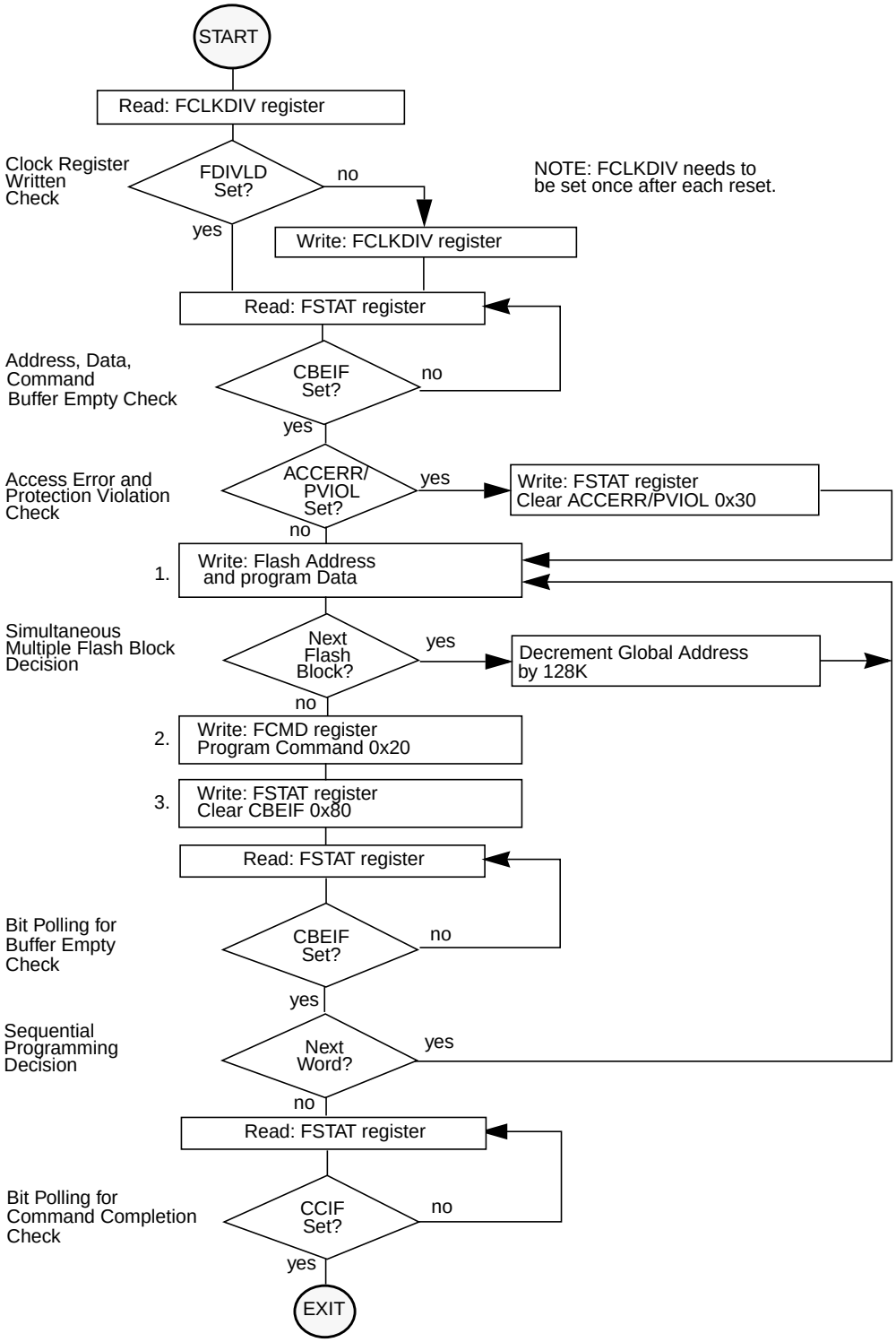

Figure 27-28. Example Program Command Flow

27.4.2.4 Sector Erase Command

The sector erase operation will erase all addresses in a 1 Kbyte sector of Flash memory using an embedded algorithm.

An example flow to execute the sector erase operation is shown in Figure 27-29. The sector erase command write sequence is as follows:

1. Write to a Flash block address to start the command write sequence for the sector erase command. The Flash address written determines the sector to be erased while global address bits [9:0] and the data written are ignored. Multiple Flash sectors can be simultaneously erased by writing to the same relative address in each Flash block.
2. Write the sector erase command, 0x40, to the FCMD register.
3. Clear the CBEIF flag in the FSTAT register by writing a 1 to CBEIF to launch the sector erase command.

If a Flash sector to be erased is in a protected area of the Flash block, the PVIOL flag in the FSTAT register will set and the sector erase command will not launch. Once the sector erase command has successfully launched, the CCIF flag in the FSTAT register will set after the sector erase operation has completed unless a new command write sequence has been buffered.

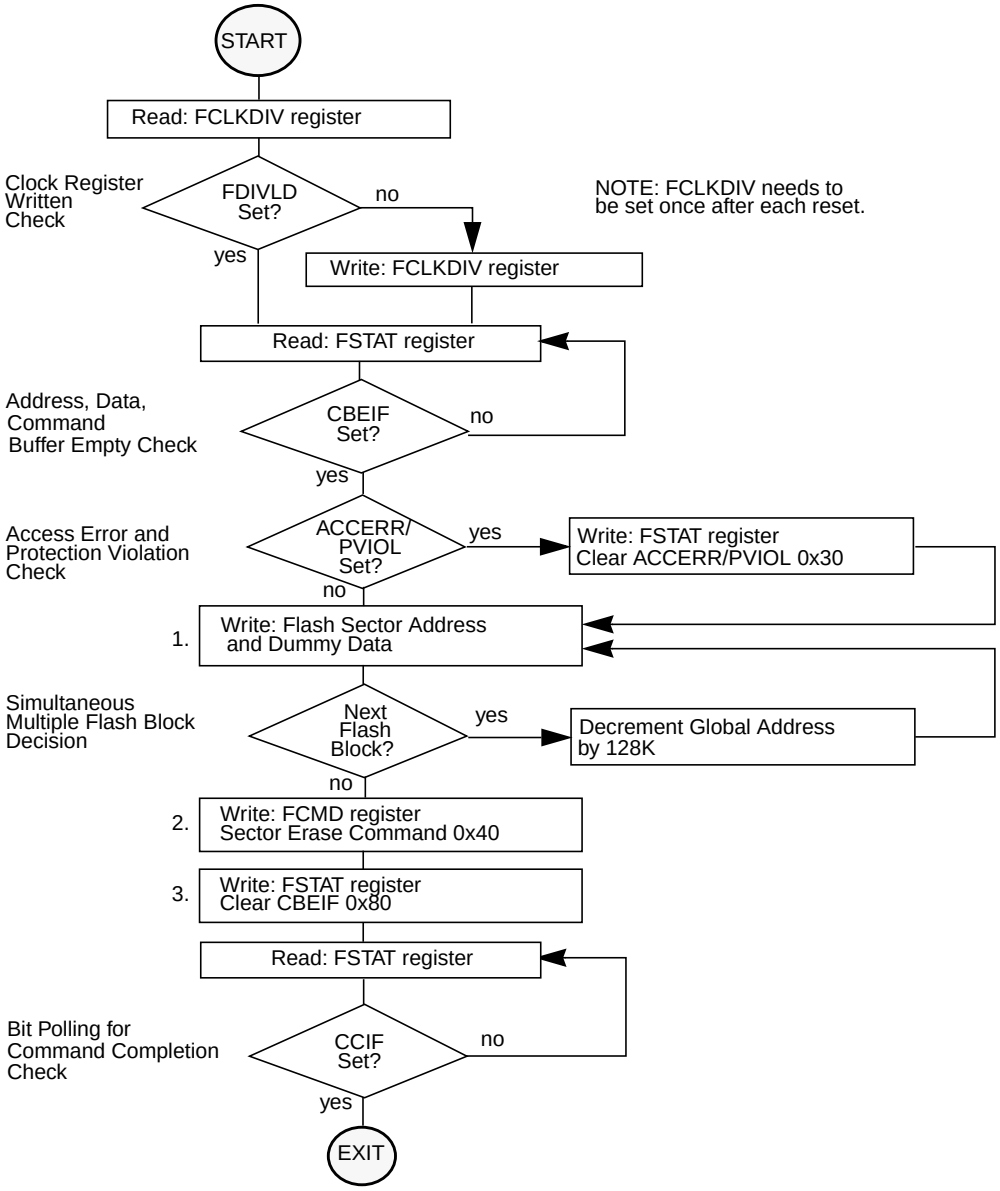

Figure 27-29. Example Sector Erase Command Flow

27.4.2.5 Mass Erase Command

The mass erase operation will erase all addresses in a Flash block using an embedded algorithm.

An example flow to execute the mass erase operation is shown in Figure 27-30. The mass erase command write sequence is as follows:

1. Write to a Flash block address to start the command write sequence for the mass erase command. The address and data written will be ignored. Multiple Flash blocks can be simultaneously mass erased by writing to the same relative address in each Flash block.
2. Write the mass erase command, 0x41, to the FCMD register.
3. Clear the CBEIF flag in the FSTAT register by writing a 1 to CBEIF to launch the mass erase command.

If a Flash block to be erased contains any protected area, the PVIOL flag in the FSTAT register will set and the mass erase command will not launch. Once the mass erase command has successfully launched, the CCIF flag in the FSTAT register will set after the mass erase operation has completed unless a new command write sequence has been buffered.

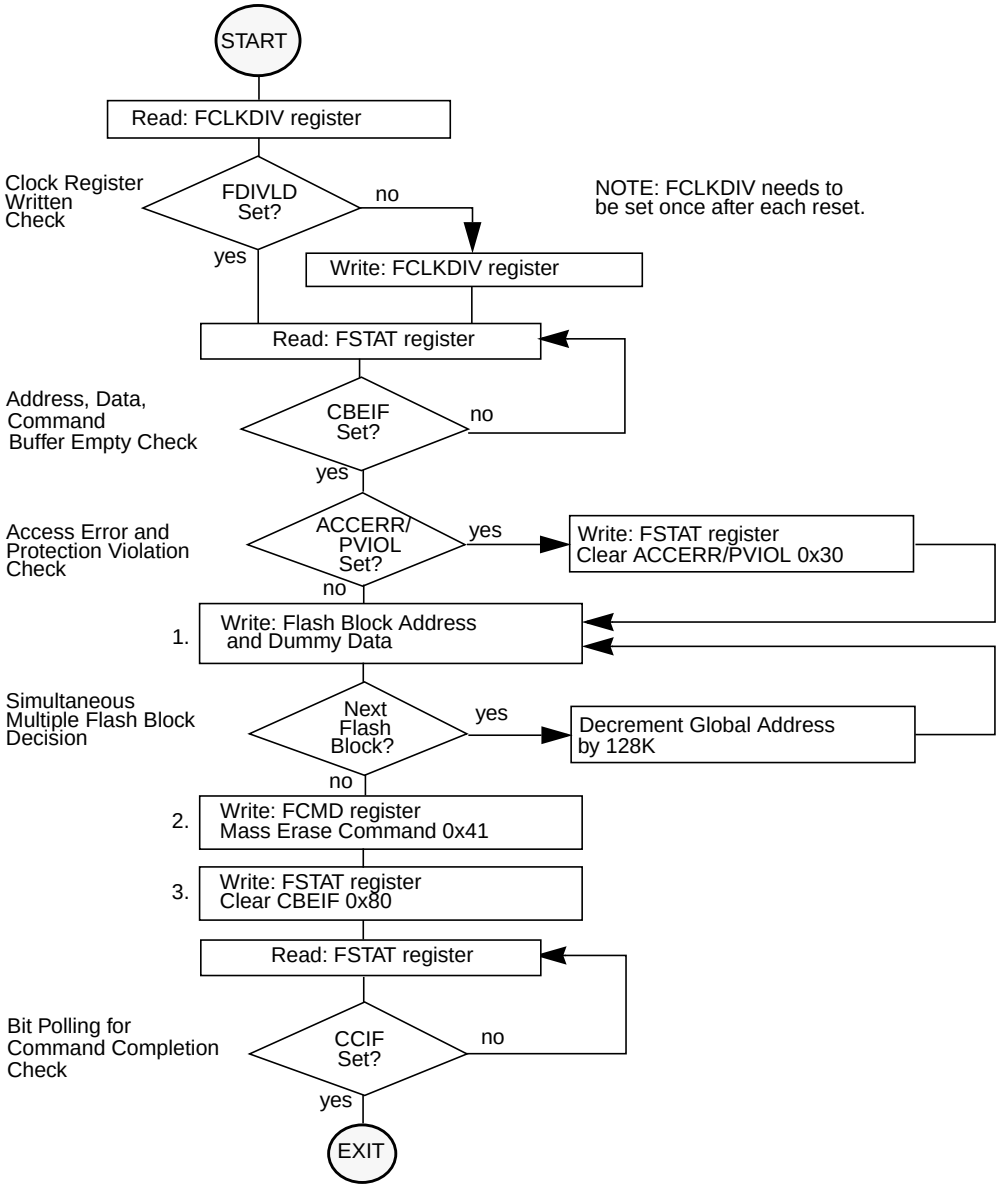

Figure 27-30. Example Mass Erase Command Flow

27.4.2.6 Sector Erase Abort Command

The sector erase abort operation will terminate the active sector erase operation so that other sectors in a Flash block are available for read and program operations without waiting for the sector erase operation to complete.

An example flow to execute the sector erase abort operation is shown in Figure 27-31. The sector erase abort command write sequence is as follows:

1. Write to any Flash block address to start the command write sequence for the sector erase abort command. The address and data written are ignored.
2. Write the sector erase abort command, 0x47, to the FCMD register.
3. Clear the CBEIF flag in the FSTAT register by writing a 1 to CBEIF to launch the sector erase abort command.

If the sector erase abort command is launched resulting in the early termination of an active sector erase operation, the ACCERR flag will set once the operation completes as indicated by the CCIF flag being set. The ACCERR flag sets to inform the user that the Flash sector may not be fully erased and a new sector erase command must be launched before programming any location in that specific sector. If the sector erase abort command is launched but the active sector erase operation completes normally, the ACCERR flag will not set upon completion of the operation as indicated by the CCIF flag being set. Therefore, if the ACCERR flag is not set after the sector erase abort command has completed, a Flash sector being erased when the abort command was launched will be fully erased. The maximum number of cycles required to abort a sector erase operation is equal to four FCLK periods (see Section 27.4.1.1, “Writing the FCLKDIV Register”) plus five bus cycles as measured from the time the CBEIF flag is cleared until the CCIF flag is set. If sectors in multiple Flash blocks are being simultaneously erased, the sector erase abort operation will be applied to all active Flash blocks without writing to each Flash block in the sector erase abort command write sequence.

NOTE

Since the ACCERR bit in the FSTAT register may be set at the completion of the sector erase abort operation, a command write sequence is not allowed to be buffered behind a sector erase abort command write sequence. The CBEIF flag will not set after launching the sector erase abort command to indicate that a command should not be buffered behind it. If an attempt is made to start a new command write sequence with a sector erase abort operation active, the ACCERR flag in the FSTAT register will be set. A new command write sequence may be started after clearing the ACCERR flag, if set.

NOTE

The sector erase abort command should be used sparingly since a sector erase operation that is aborted counts as a complete program/erase cycle.

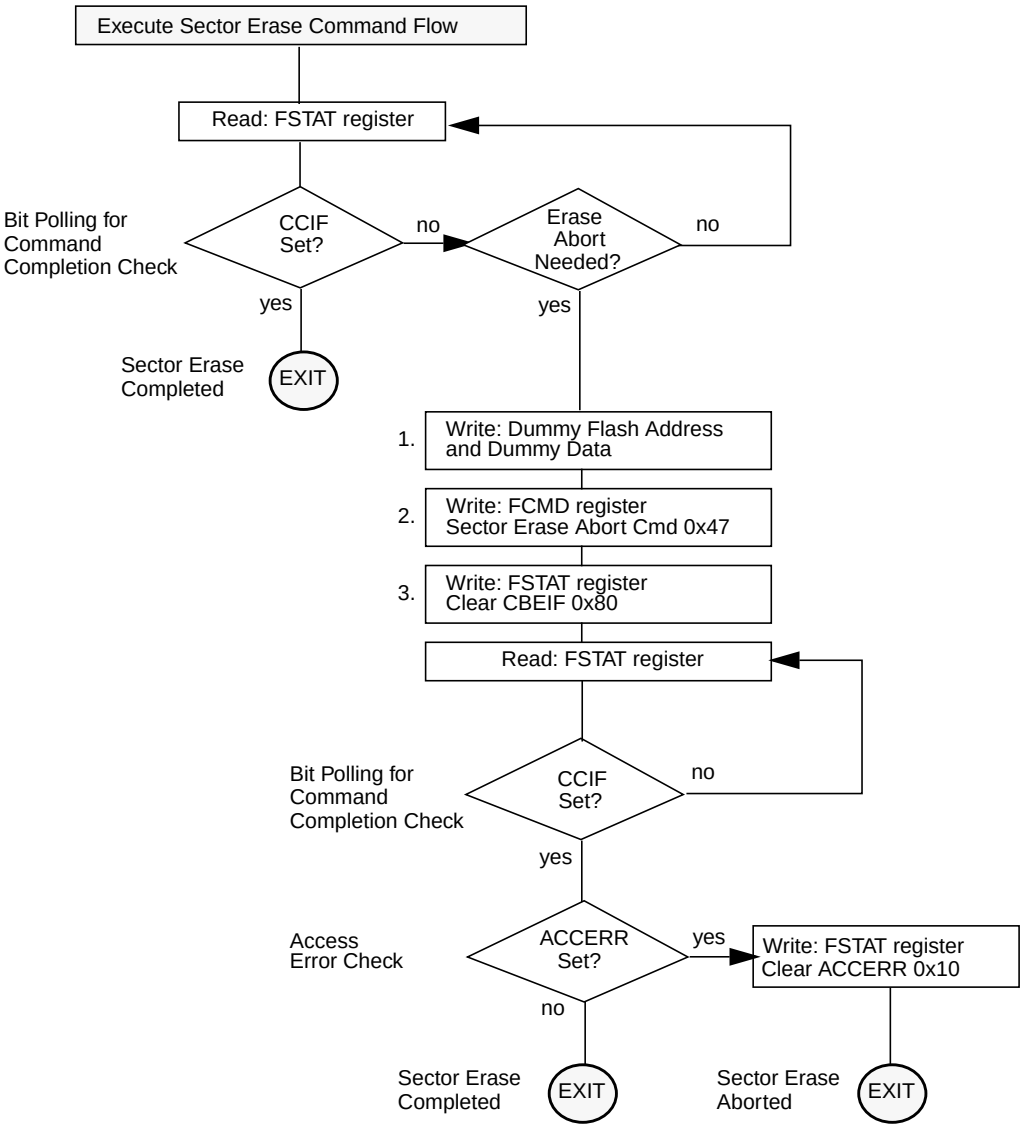

Figure 27-31. Example Sector Erase Abort Command Flow

27.4.3 Illegal Flash Operations

The ACCERR flag will be set during the command write sequence if any of the following illegal steps are performed, causing the command write sequence to immediately abort:

1. Writing to a Flash address before initializing the FCLKDIV register.
2. Writing a byte or misaligned word to a valid Flash address.
3. Starting a command write sequence while a data compress operation is active.
4. Starting a command write sequence while a sector erase abort operation is active.
5. Writing a Flash address in step 1 of a command write sequence that is not the same relative address as the first one written in the same command write sequence.
6. Writing to any Flash register other than FCMD after writing to a Flash address.
7. Writing a second command to the FCMD register in the same command write sequence.
8. Writing an invalid command to the FCMD register.
9. When security is enabled, writing a command other than mass erase to the FCMD register when the write originates from a non-secure memory location or from the Background Debug Mode.
10. Writing to a Flash address after writing to the FCMD register.
11. Writing to any Flash register other than FSTAT (to clear CBEIF) after writing to the FCMD register.
12. Writing a 0 to the CBEIF flag in the FSTAT register to abort a command write sequence.

The ACCERR flag will not be set if any Flash register is read during a valid command write sequence.

The ACCERR flag will also be set if any of the following events occur:

1. Launching the sector erase abort command while a sector erase operation is active which results in the early termination of the sector erase operation (see Section 27.4.2.6, “Sector Erase Abort Command”).
2. The MCU enters stop mode and a program or erase operation is in progress. The operation is aborted immediately and any pending command is purged (see Section 27.5.2, “Stop Mode”).

If the Flash memory is read during execution of an algorithm (CCIF = 0), the read operation will return invalid data and the ACCERR flag will not be set.

If the ACCERR flag is set in the FSTAT register, the user must clear the ACCERR flag before starting another command write sequence (see Section 27.3.2.6, “Flash Status Register (FSTAT)”).

The PVIOL flag will be set after the command is written to the FCMD register during a command write sequence if any of the following illegal operations are attempted, causing the command write sequence to immediately abort:

1. Writing the program command if an address written in the command write sequence was in a protected area of the Flash memory
2. Writing the sector erase command if an address written in the command write sequence was in a protected area of the Flash memory
3. Writing the mass erase command to a Flash block while any Flash protection is enabled in the block

If the PVIOL flag is set in the FSTAT register, the user must clear the PVIOL flag before starting another command write sequence (see Section 27.3.2.6, “Flash Status Register (FSTAT)”).

27.5 Operating Modes

27.5.1 Wait Mode

If a command is active (CCIF = 0) when the MCU enters wait mode, the active command and any buffered command will be completed.

The Flash module can recover the MCU from wait mode if the CBEIF and CCIF interrupts are enabled (see Section 27.8, “Interrupts”).

27.5.2 Stop Mode

If a command is active (CCIF = 0) when the MCU enters stop mode, the operation will be aborted and, if the operation is program or erase, the Flash array data being programmed or erased may be corrupted and the CCIF and ACCERR flags will be set. If active, the high voltage circuitry to the Flash memory will immediately be switched off when entering stop mode. Upon exit from stop mode, the CBEIF flag is set and any buffered command will not be launched. The ACCERR flag must be cleared before starting a command write sequence (see Section 27.4.1.2, “Command Write Sequence”).

NOTE

As active commands are immediately aborted when the MCU enters stop mode, it is strongly recommended that the user does not use the STOP instruction during program or erase operations.

27.5.3 Background Debug Mode

In background debug mode (BDM), the FPROT register is writable. If the MCU is unsecured, then all Flash commands listed in Table 27-20 can be executed. If the MCU is secured and is in special single chip mode, only mass erase can be executed.

27.6 Flash Module Security

The Flash module provides the necessary security information to the MCU. After each reset, the Flash module determines the security state of the MCU as defined in Section 27.3.2.2, “Flash Security Register (FSEC)”.

The contents of the Flash security byte at 0x7F_FF0F in the Flash Configuration Field must be changed directly by programming 0x7F_FF0F when the MCU is unsecured and the higher address sector is unprotected. If the Flash security byte is left in a secured state, any reset will cause the MCU to initialize to a secure operating mode.

27.6.1 Unsecuring the MCU using Backdoor Key Access

The MCU may be unsecured by using the backdoor key access feature which requires knowledge of the contents of the backdoor keys (four 16-bit words programmed at addresses 0x7F_FF00–0x7F_FF07). If the KEYEN[1:0] bits are in the enabled state (see Section 27.3.2.2, “Flash Security Register (FSEC)”) and the KEYACC bit is set, a write to a backdoor key address in the Flash memory triggers a comparison between the written data and the backdoor key data stored in the Flash memory. If all four words of data are written to the correct addresses in the correct order and the data matches the backdoor keys stored in the Flash memory, the MCU will be unsecured. The data must be written to the backdoor keys sequentially starting with 0x7F_FF00–1 and ending with 0x7F_FF06–7. 0x0000 and 0xFFFF are not permitted as backdoor keys. While the KEYACC bit is set, reads of the Flash memory will return invalid data.

The user code stored in the Flash memory must have a method of receiving the backdoor keys from an external stimulus. This external stimulus would typically be through one of the on-chip serial ports.

If the KEYEN[1:0] bits are in the enabled state (see Section 27.3.2.2, “Flash Security Register (FSEC)”), the MCU can be unsecured by the backdoor key access sequence described below:

1. Set the KEYACC bit in the Flash Configuration Register (FCNFG).
2. Write the correct four 16-bit words to Flash addresses 0xFF00–0xFF07 sequentially starting with 0x7F_FF00.
3. Clear the KEYACC bit. Depending on the user code used to write the backdoor keys, a wait cycle (NOP) may be required before clearing the KEYACC bit.
4. If all four 16-bit words match the backdoor keys stored in Flash addresses 0x7F_FF00–0x7F_FF07, the MCU is unsecured and the SEC[1:0] bits in the FSEC register are forced to the unsecure state of 1:0.

The backdoor key access sequence is monitored by an internal security state machine. An illegal operation during the backdoor key access sequence will cause the security state machine to lock, leaving the MCU in the secured state. A reset of the MCU will cause the security state machine to exit the lock state and allow a new backdoor key access sequence to be attempted. The following operations during the backdoor key access sequence will lock the security state machine:

1. If any of the four 16-bit words does not match the backdoor keys programmed in the Flash array.
2. If the four 16-bit words are written in the wrong sequence.
3. If more than four 16-bit words are written.
4. If any of the four 16-bit words written are 0x0000 or 0xFFFF.
5. If the KEYACC bit does not remain set while the four 16-bit words are written.
6. If any two of the four 16-bit words are written on successive MCU clock cycles.

After the backdoor keys have been correctly matched, the MCU will be unsecured. Once the MCU is unsecured, the Flash security byte can be programmed to the unsecure state, if desired.

In the unsecure state, the user has full control of the contents of the backdoor keys by programming addresses 0x7F_FF00–0x7F_FF07 in the Flash Configuration Field.

The security as defined in the Flash security byte (0x7F_FF0F) is not changed by using the backdoor key access sequence to unsecure. The backdoor keys stored in addresses 0x7F_FF00–0x7F_FF07 are

unaffected by the backdoor key access sequence. After the next reset of the MCU, the security state of the Flash module is determined by the Flash security byte (0x7F_FF0F). The backdoor key access sequence has no effect on the program and erase protections defined in the Flash protection register.

It is not possible to unsecure the MCU in special single chip mode by using the backdoor key access sequence in background debug mode (BDM).

27.6.2 Unsecuring the MCU in Special Single Chip Mode using BDM

The MCU can be unsecured in special single chip mode by erasing the Flash module by the following method:

- Reset the MCU into special single chip mode, delay while the erase test is performed by the BDM secure ROM, send BDM commands to disable protection in the Flash module, and execute a mass erase command write sequence to erase the Flash memory.

After the CCIF flag sets to indicate that the mass operation has completed, reset the MCU into special single chip mode. The BDM secure ROM will verify that the Flash memory is erased and will assert the UNSEC bit in the BDM status register. This BDM action will cause the MCU to override the Flash security state and the MCU will be unsecured. All BDM commands will be enabled and the Flash security byte may be programmed to the unsecure state by the following method:

- Send BDM commands to execute a word program sequence to program the Flash security byte to the unsecured state and reset the MCU.

27.7 Resets

27.7.1 Flash Reset Sequence

On each reset, the Flash module executes a reset sequence to hold CPU activity while loading the following registers from the Flash memory according to Table 27-1:

- FPROT — Flash Protection Register (see Section 27.3.2.5).
- FCTL - Flash Control Register (see Section 27.3.2.8).
- FSEC — Flash Security Register (see Section 27.3.2.2).

27.7.2 Reset While Flash Command Active

If a reset occurs while any Flash command is in progress, that command will be immediately aborted. The state of the word being programmed or the sector/block being erased is not guaranteed.

27.8 Interrupts

The Flash module can generate an interrupt when all Flash command operations have completed, when the Flash address, data and command buffers are empty.

Table 27-21. Flash Interrupt Sources

Interrupt Source	Interrupt Flag	Local Enable	Global (CCR) Mask
Flash Address, Data and Command Buffers empty	CBEIF (FSTAT register)	CBEIE (FCNFG register)	I Bit
All Flash commands completed	CCIF (FSTAT register)	CCIE (FCNFG register)	I Bit

NOTE

Vector addresses and their relative interrupt priority are determined at the MCU level.

27.8.1 Description of Flash Interrupt Operation

The logic used for generating interrupts is shown in Figure 27-32.

The Flash module uses the CBEIF and CCIF flags in combination with the CBIE and CCIE enable bits to generate the Flash command interrupt request.

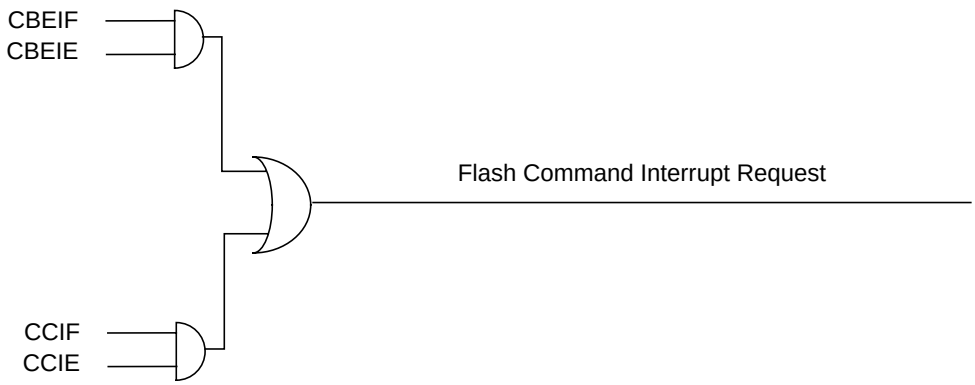

Figure 27-32. Flash Interrupt Implementation

For a detailed description of the register bits, refer to Section 27.3.2.4, “Flash Configuration Register (FCNFG)” and Section 27.3.2.6, “Flash Status Register (FSTAT)” .

Chapter 28
256 Kbyte Flash Module (S12XFTX256K2V1)

28.1 Introduction

This document describes the FTX256K2 module that includes a 256 Kbyte Flash (nonvolatile) memory. The Flash memory may be read as either bytes, aligned words or misaligned words. Read access time is one bus cycle for bytes and aligned words, and two bus cycles for misaligned words.

The Flash memory is ideal for program and data storage for single-supply applications allowing for field reprogramming without requiring external voltage sources for program or erase. Program and erase functions are controlled by a command driven interface. The Flash module supports both block erase and sector erase. An erased bit reads 1 and a programmed bit reads 0. The high voltage required to program and erase the Flash memory is generated internally. It is not possible to read from a Flash block while it is being erased or programmed.

CAUTION

A Flash word must be in the erased state before being programmed.
Cumulative programming of bits within a Flash word is not allowed.

28.1.1 Glossary

Command Write Sequence — A three-step MCU instruction sequence to execute built-in algorithms (including program and erase) on the Flash memory.

Multiple-Input Signature Register (MISR) — A Multiple-Input Signature Register is an output response analyzer implemented using a linear feedback shift-register (LFSR). A 16-bit MISR is used to compress data and generate a signature that is particular to the data read from a Flash block.

28.1.2 Features

- 256 Kbytes of Flash memory comprised of two 128 Kbyte blocks with each block divided into 128 sectors of 1024 bytes
- Automated program and erase algorithm
- Interrupts on Flash command completion, command buffer empty
- Fast sector erase and word program operation
- 2-stage command pipeline for faster multi-word program times
- Sector erase abort feature for critical interrupt response
- Flexible protection scheme to prevent accidental program or erase
- Single power supply for all Flash operations including program and erase

- Security feature to prevent unauthorized access to the Flash memory
- Code integrity check using built-in data compression

28.1.3 Modes of Operation

Program, erase, erase verify, and data compress operations (please refer to Section 28.4.1, "Flash Command Operations" for details).

28.1.4 Block Diagram

A block diagram of the Flash module is shown in Figure 28-1.

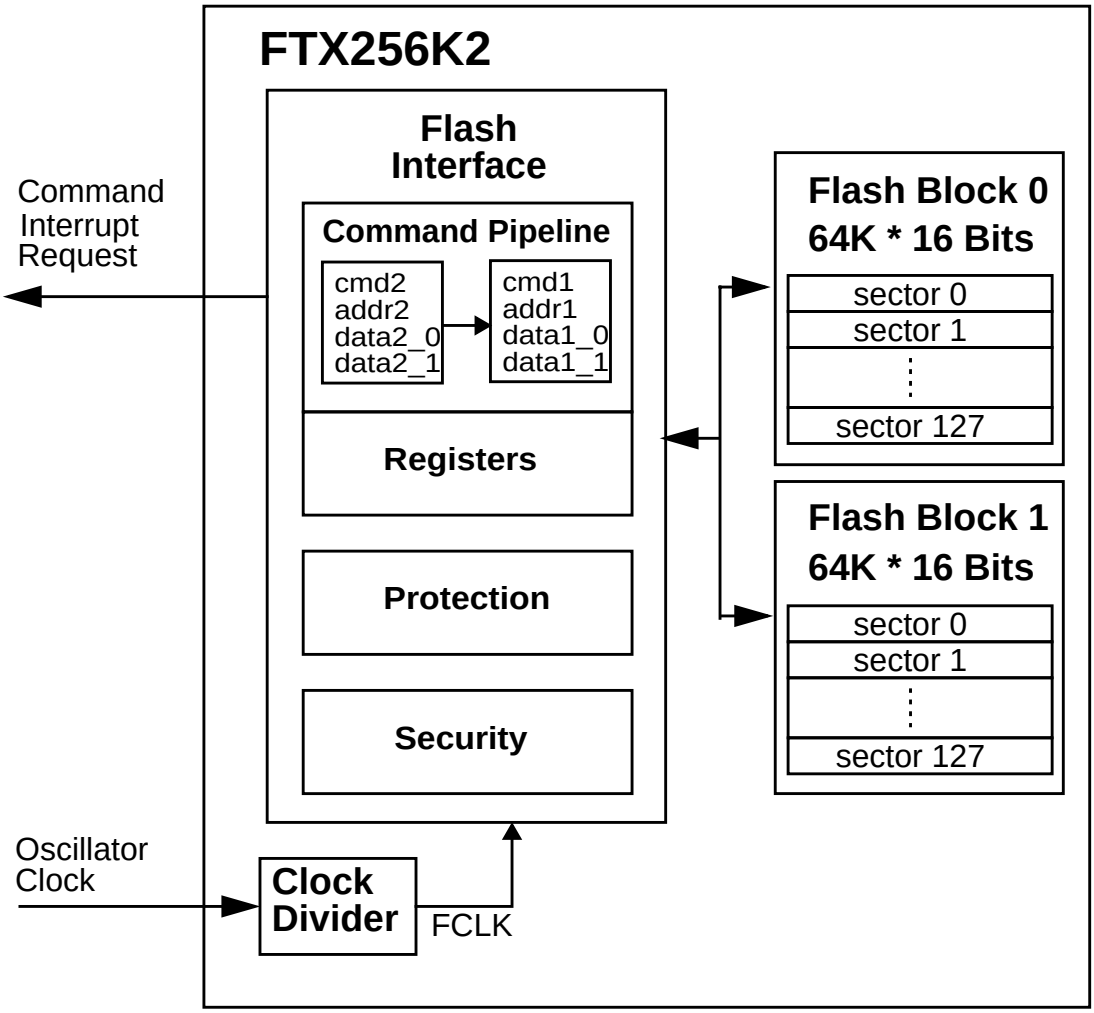

Figure 28-1. FTX256K2 Block Diagram

28.2 External Signal Description

The Flash module contains no signals that connect off-chip.

28.3 Memory Map and Register Definition

This section describes the memory map and registers for the Flash module.

28.3.1 Module Memory Map

The Flash memory map is shown in Figure 28-2. The HCS12X architecture places the Flash memory addresses between global addresses 0x78_0000 and 0x7F_FFFF. The FPROT register, described in Section 28.3.2.5, “Flash Protection Register (FPROT)”, can be set to protect regions in the Flash memory from accidental program or erase. Three separate memory regions, one growing upward from global address 0x7F_8000 in the Flash memory (called the lower region), one growing downward from global address 0x7F_FFFF in the Flash memory (called the higher region), and the remaining addresses in the Flash memory, can be activated for protection. The Flash memory addresses covered by these protectable regions are shown in the Flash memory map. The higher address region is mainly targeted to hold the boot loader code since it covers the vector space. The lower address region can be used for EEPROM emulation in an MCU without an EEPROM module since it can be left unprotected while the remaining addresses are protected from program or erase. Default protection settings as well as security information that allows the MCU to restrict access to the Flash module are stored in the Flash configuration field as described in Table 28-1.

Table 28-1. Flash Configuration Field

Global Address	Size (Bytes)	Description
0x7F_FF00 – 0x7F_FF07	8	Backdoor Comparison Key Refer to Section 28.6.1, “Unsecuring the MCU using Backdoor Key Access”
0x7F_FF08 – 0x7F_FF0C	5	Reserved
0x7F_FF0D	1	Flash Protection byte Refer to Section 28.3.2.5, “Flash Protection Register (FPROT)”
0x7F_FF0E	1	Flash Nonvolatile byte Refer to Section 28.3.2.8, “Flash Control Register (FCTL)”
0x7F_FF0F	1	Flash Security byte Refer to Section 28.3.2.2, “Flash Security Register (FSEC)”

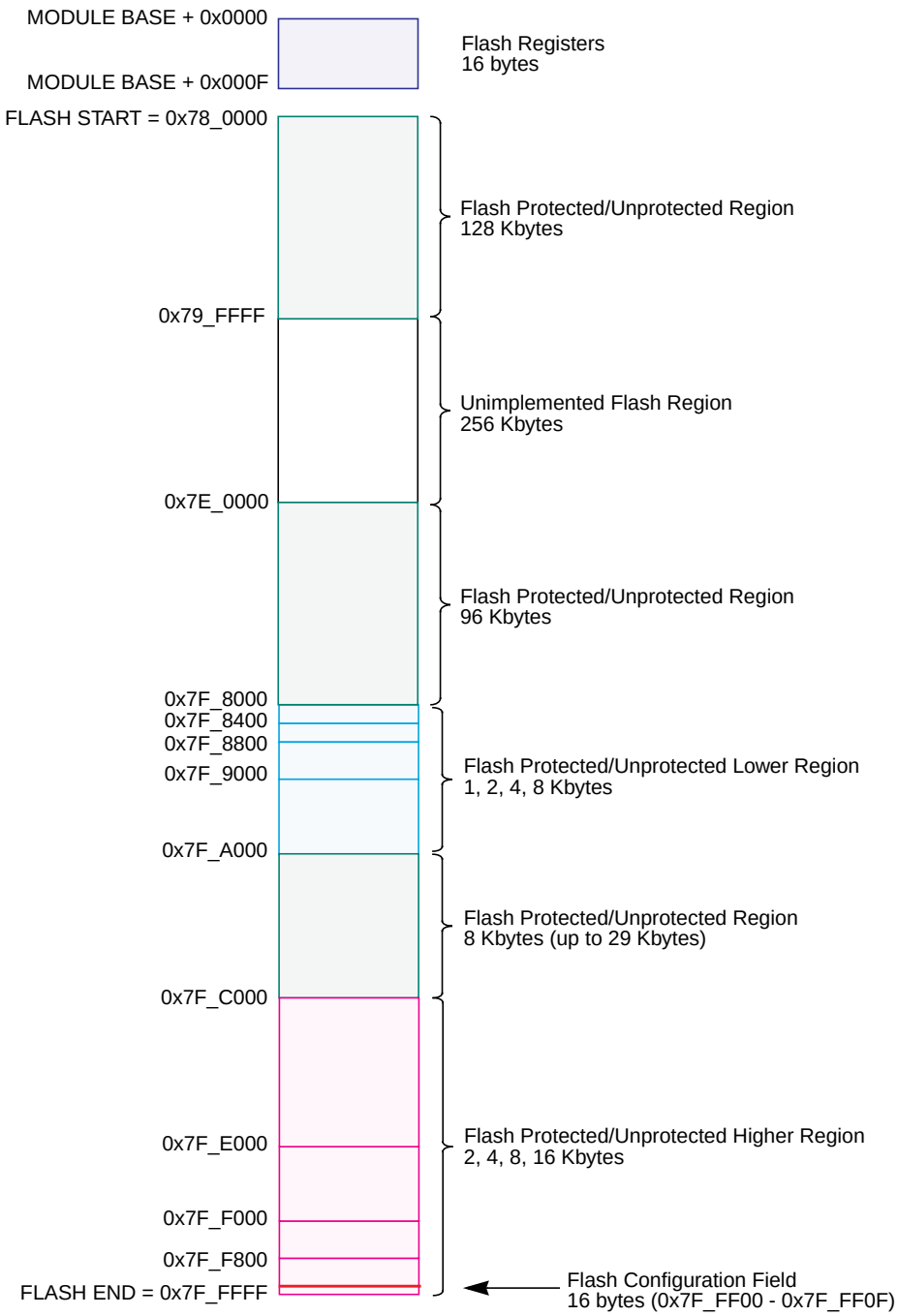

Figure 28-2. Flash Memory Map

28.3.2 Register Descriptions

The Flash module contains a set of 16 control and status registers located between module base + 0x0000 and 0x000F. A summary of the Flash module registers is given in Figure 28-3. Detailed descriptions of each register bit are provided.

Register Name		Bit 7	6	5	4	3	2	1	Bit 0
FCLKDIV	R	FDIVLD	PRDIV8	FDIV5	FDIV4	FDIV3	FDIV2	FDIV1	FDIV0
	W								
FSEC	R	KEYEN		RNV5	RNV4	RNV3	RNV2	SEC	
	W								
FTSTMOD	R	0	MRDS		0	0	0	0	0
	W								
FCNFG	R	CBEIE	CCIE	KEYACC	0	0	0	0	0
	W								
FPROT	R	FPOPEN	RNV6	FPHDIS	FPHS		FPLDIS	FPLS	
	W								
FSTAT	R	CBEIF	CCIF	PVIOL	ACCERR	0	BLANK	0	0
	W								
FCMD	R	0	CMDB						
	W								
FCTL	R	0	NV6	NV5	NV4	NV3	NV2	NV1	NV0
	W								
FADDRHI	R	FADDRHI							
	W								
FADDRLO	R	FADDRLO							
	W								
FDATAHI	R	FDATAHI							
	W								
FDATALO	R	FDATALO							
	W								

Figure 28-3. FTX256K2 Register Summary

Register Name		Bit 7	6	5	4	3	2	1	Bit 0
RESERVED1	R	0	0	0	0	0	0	0	0
	W								
RESERVED2	R	0	0	0	0	0	0	0	0
	W								
RESERVED3	R	0	0	0	0	0	0	0	0
	W								
RESERVED4	R	0	0	0	0	0	0	0	0
	W								

Figure 28-3. FTX256K2 Register Summary (continued)

28.3.2.1 Flash Clock Divider Register (FCLKDIV)

The FCLKDIV register is used to control timed events in program and erase algorithms.

	7	6	5	4	3	2	1	0
R	FDIVLD	PRDIV8	FDIV5	FDIV4	FDIV3	FDIV2	FDIV1	FDIV0
W								
Reset	0	0	0	0	0	0	0	0

= Unimplemented or Reserved

Figure 28-4. Flash Clock Divider Register (FCLKDIV)

All bits in the FCLKDIV register are readable, bits 6-0 are write once and bit 7 is not writable.

Table 28-2. FCLKDIV Field Descriptions

Field	Description
7 FDIVLD	**Clock Divider Loaded.** 0 Register has not been written. 1 Register has been written to since the last reset.
6 PRDIV8	**Enable Prescalar by 8.** 0 The oscillator clock is directly fed into the clock divider. 1 The oscillator clock is divided by 8 before feeding into the clock divider.
5:0 FDIV[5:0]	**Clock Divider Bits** — The combination of PRDIV8 and FDIV[5:0] must divide the oscillator clock down to a frequency of 150 kHz–200 kHz. The maximum divide ratio is 512. Please refer to Section 28.4.1.1, “Writing the FCLKDIV Register” for more information.

28.3.2.2 Flash Security Register (FSEC)

The FSEC register holds all bits associated with the security of the MCU and Flash module.

	7	6	5	4	3	2	1	0
R	KEYEN		RNV5	RNV4	RNV3	RNV2	SEC	
W								
Reset	F	F	F	F	F	F	F	F

= Unimplemented or Reserved

Figure 28-5. Flash Security Register (FSEC)

All bits in the FSEC register are readable but are not writable.

The FSEC register is loaded from the Flash Configuration Field at address 0x7F_FF0F during the reset sequence, indicated by F in Figure 28-5.

Table 28-3. FSEC Field Descriptions

Field	Description
7:6 KEYEN[1:0]	**Backdoor Key Security Enable Bits** — The KEYEN[1:0] bits define the enabling of backdoor key access to the Flash module as shown in Table 28-4.
5:2 RNV[5:2]	**Reserved Nonvolatile Bits** — The RNV[5:2] bits should remain in the erased state for future enhancements.
1:0 SEC[1:0]	**Flash Security Bits** — The SEC[1:0] bits define the security state of the MCU as shown in Table 28-5. If the Flash module is unsecured using backdoor key access, the SEC[1:0] bits are forced to 1:0.

Table 28-4. Flash KEYEN States

KEYEN[1:0]	Status of Backdoor Key Access
00	DISABLED
01[1]	DISABLED
10	ENABLED
11	DISABLED

1 Preferred KEYEN state to disable Backdoor Key Access.

Table 28-5. Flash Security States

SEC[1:0]	Status of Security
00	SECURED
01[1]	SECURED
10	UNSECURED
11	SECURED

1 Preferred SEC state to set MCU to secured state.

The security function in the Flash module is described in Section 28.6, “Flash Module Security”.

28.3.2.3 Flash Test Mode Register (FTSTMOD)

The FTSTMOD register is used to control Flash test features.

	7	6	5	4	3	2	1	0
R	0	MRDS		0	0	0	0	0
W								
Reset	0	0	0	0	0	0	0	0

= Unimplemented or Reserved

Figure 28-6. Flash Test Mode Register (FTSTMOD —Normal Mode)

	7	6	5	4	3	2	1	0
R	0	MRDS		WRALL	0	0	0	0
W								
Reset	0	0	0	0	0	0	0	0

= Unimplemented or Reserved

Figure 28-7. Flash Test Mode Register (FTSTMOD — Special Mode)

MRDS bits are readable and writable while all remaining bits read 0 and are not writable in normal mode. The WRALL bit is writable only in special mode to simplify mass erase and erase verify operations. When writing to the FTSTMOD register in special mode, all unimplemented/reserved bits must be written to 0.

Table 28-6. FTSTMOD Field Descriptions

Field	Description
6:5 MRDS[1:0]	**Margin Read Setting** — The MRDS[1:0] bits are used to set the sense-amp margin level for reads of the Flash array as shown in Table 28-7.
4 WRALL	**Write to all Register Banks** — If the WRALL bit is set, all banked FDATA registers sharing the same register address will be written simultaneously during a register write. 0 Write only to the FDATA register bank selected using BKSEL. 1 Write to all FDATA register banks.

Table 28-7. FTSTMOD Margin Read Settings

MRDS[1:0]	Margin Read Setting
00	Normal
01	Program Margin[1]
10	Erase Margin[2]
11	Normal

1 Flash array reads will be sensitive to program margin.
2 Flash array reads will be sensitive to erase margin.

28.3.2.4 Flash Configuration Register (FCNFG)

The FCNFG register enables the Flash interrupts and gates the security backdoor writes.

	7	6	5	4	3	2	1	0
R	CBEIE	CCIE	KEYACC	0	0	0	0	0
W								
Reset	0	0	0	0	0	0	0	0

= Unimplemented or Reserved

Figure 28-8. Flash Configuration Register (FCNFG — Normal Mode)

	7	6	5	4	3	2	1	0
R	CBEIE	CCIE	KEYACC	0	0	0	0	BKSEL
W								
Reset	0	0	0	0	0	0	0	0

= Unimplemented or Reserved

Figure 28-9. Flash Configuration Register (FCNFG — Special Mode)

CBEIE, CCIE and KEYACC bits are readable and writable while all remaining bits read 0 and are not writable in normal mode. KEYACC is only writable if KEYEN (see Section 28.3.2.2, "Flash Security Register (FSEC)" is set to the enabled state. BKSEL is readable and writable in special mode to simplify mass erase and erase verify operations. When writing to the FCNFG register in special mode, all unimplemented/ reserved bits must be written to 0.

Table 28-8. FCNFG Field Descriptions

Field	Description
7 CBEIE	**Command Buffer Empty Interrupt Enable** — The CBEIE bit enables an interrupt in case of an empty command buffer in the Flash module. 0 Command buffer empty interrupt disabled. 1 An interrupt will be requested whenever the CBEIF flag (see Section 28.3.2.6, "Flash Status Register (FSTAT)") is set.
6 CCIE	**Command Complete Interrupt Enable** — The CCIE bit enables an interrupt in case all commands have been completed in the Flash module. 0 Command complete interrupt disabled. 1 An interrupt will be requested whenever the CCIF flag (see Section 28.3.2.6, "Flash Status Register (FSTAT)") is set.
5 KEYACC	**Enable Security Key Writing** 0 Flash writes are interpreted as the start of a command write sequence. 1 Writes to Flash array are interpreted as keys to open the backdoor. Reads of the Flash array return invalid data.
0 BKSEL	**Block Select** — The BKSEL bit indicates which register bank is active. 0 Select register bank associated with Flash block 0. 1 Select register bank associated with Flash block 1.

28.3.2.5 Flash Protection Register (FPROT)

The FPROT register defines which Flash sectors are protected against program or erase operations.

	7	6	5	4	3	2	1	0
R	FPOPEN	RNV6	FPHDIS	FPHS		FPLDIS	FPLS	
W								
Reset	F	F	F	F	F	F	F	F

= Unimplemented or Reserved

Figure 28-10. Flash Protection Register (FPROT)

All bits in the FPROT register are readable and writable with restrictions (see Section 28.3.2.5.1, “Flash Protection Restrictions”) except for RNV[6] which is only readable.

During the reset sequence, the FPROT register is loaded from the Flash Configuration Field at global address 0x7F_FF0D. To change the Flash protection that will be loaded during the reset sequence, the upper sector of the Flash memory must be unprotected, then the Flash Protect/Security byte located as described in Table 28-1 must be reprogrammed.

Trying to alter data in any protected area in the Flash memory will result in a protection violation error and the PVIOL flag will be set in the FSTAT register. The mass erase of a Flash block is not possible if any of the Flash sectors contained in the Flash block are protected.

Table 28-9. FPROT Field Descriptions

Field	Description
7 FPOPEN	**Flash Protection Open** — The FPOPEN bit determines the protection function for program or erase as shown in Table 28-10. 0 The FPHDIS and FPLDIS bits define unprotected address ranges as specified by the corresponding FPHS[1:0] and FPLS[1:0] bits. For an MCU without an EEPROM module, the FPOPEN clear state allows the main part of the Flash block to be protected while a small address range can remain unprotected for EEPROM emulation. 1 The FPHDIS and FPLDIS bits enable protection for the address range specified by the corresponding FPHS[1:0] and FPLS[1:0] bits.
6 RNV6	**Reserved Nonvolatile Bit** — The RNV[6] bit should remain in the erased state for future enhancements.
5 FPHDIS	**Flash Protection Higher Address Range Disable** — The FPHDIS bit determines whether there is a protected/unprotected area in a specific region of the Flash memory ending with global address 0x7F_FFFF. 0 Protection/Unprotection enabled. 1 Protection/Unprotection disabled.
4:3 FPHS[1:0]	**Flash Protection Higher Address Size** — The FPHS[1:0] bits determine the size of the protected/unprotected area as shown inTable 28-11. The FPHS[1:0] bits can only be written to while the FPHDIS bit is set.
2 FPLDIS	**Flash Protection Lower Address Range Disable** — The FPLDIS bit determines whether there is a protected/unprotected area in a specific region of the Flash memory beginning with global address 0x7F_8000. 0 Protection/Unprotection enabled. 1 Protection/Unprotection disabled.
1:0 FPLS[1:0]	**Flash Protection Lower Address Size** — The FPLS[1:0] bits determine the size of the protected/unprotected area as shown in Table 28-12. The FPLS[1:0] bits can only be written to while the FPLDIS bit is set.

Table 28-10. Flash Protection Function

FPOPEN	FPHDIS	FPLDIS	Function[1]
1	1	1	No Protection
1	1	0	Protected Low Range
1	0	1	Protected High Range
1	0	0	Protected High and Low Ranges
0	1	1	Full Flash memory Protected
0	1	0	Unprotected Low Range
0	0	1	Unprotected High Range
0	0	0	Unprotected High and Low Ranges

1 For range sizes, refer to Table 28-11 and Table 28-12.

Table 28-11. Flash Protection Higher Address Range

FPHS[1:0]	Global Address Range	Protected Size
00	0x7F_F800–0x7F_FFFF	2 Kbytes
01	0x7F_F000–0x7F_FFFF	4 Kbytes
10	0x7F_E000–0x7F_FFFF	8 Kbytes
11	0x7F_C000–0x7F_FFFF	16 Kbytes

Table 28-12. Flash Protection Lower Address Range

FPLS[1:0]	Global Address Range	Protected Size
00	0x7F_8000–0x7F_83FF	1 Kbytes
01	0x7F_8000–0x7F_87FF	2 Kbytes
10	0x7F_8000–0x7F_8FFF	4 Kbytes
11	0x7F_8000–0x7F_9FFF	8 Kbytes

All possible Flash protection scenarios are shown in Figure 28-11. Although the protection scheme is loaded from the Flash array at global address 0x7F_FF0D during the reset sequence, it can be changed by the user. This protection scheme can be used by applications requiring re-programming in single chip mode while providing as much protection as possible if re-programming is not required.

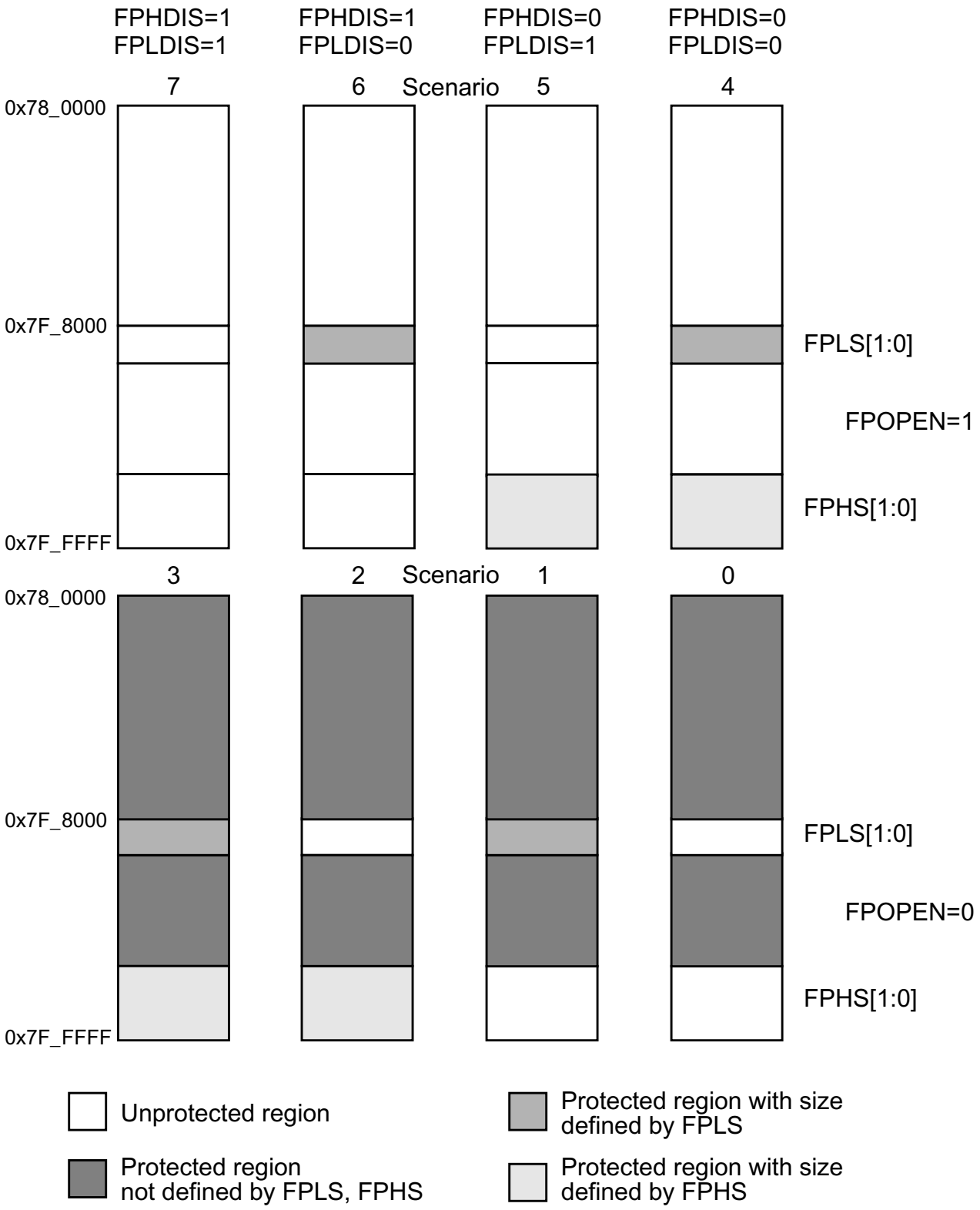

Figure 28-11. Flash Protection Scenarios

28.3.2.5.1 Flash Protection Restrictions

The general guideline is that Flash protection can only be added and not removed. Table 28-13 specifies all valid transitions between Flash protection scenarios. Any attempt to write an invalid scenario to the FPROT register will be ignored and the FPROT register will remain unchanged. The contents of the FPROT register reflect the active protection scenario. See the FPHS and FPLS descriptions for additional restrictions.

Table 28-13. Flash Protection Scenario Transitions

From Protection Scenario	To Protection Scenario[1]							
	0	**1**	**2**	**3**	**4**	**5**	**6**	**7**
0	X	X	X	X				
1		X		X				
2			X	X				
3				X				
4				X	X			
5			X	X	X	X		
6		X		X	X		X	
7	X	X	X	X	X	X	X	X

1 Allowed transitions marked with X.

28.3.2.6 Flash Status Register (FSTAT)

The FSTAT register defines the operational status of the module.

	7	6	5	4	3	2	1	0
R	CBEIF	CCIF	PVIOL	ACCERR	0	BLANK	0	0
W								
Reset	1	1	0	0	0	0	0	0

= Unimplemented or Reserved

Figure 28-12. Flash Status Register (FSTAT — Normal Mode)

	7	6	5	4	3	2	1	0
R	CBEIF	CCIF	PVIOL	ACCERR	0	BLANK	FAIL	0
W								
Reset	1	1	0	0	0	0	0	0

= Unimplemented or Reserved

Figure 28-13. Flash Status Register (FSTAT — Special Mode)

CBEIF, PVIOL, and ACCERR are readable and writable, CCIF and BLANK are readable and not writable, remaining bits read 0 and are not writable in normal mode. FAIL is readable and writable in special mode. FAIL must be clear in special mode when starting a command write sequence.

Table 28-14. FSTAT Field Descriptions

Field	Description
7 CBEIF	**Command Buffer Empty Interrupt Flag** — The CBEIF flag indicates that the address, data and command buffers are empty so that a new command write sequence can be started. Writing a 0 to the CBEIF flag has no effect on CBEIF. Writing a 0 to CBEIF after writing an aligned word to the Flash address space, but before CBEIF is cleared, will abort a command write sequence and cause the ACCERR flag to be set. Writing a 0 to CBEIF outside of a command write sequence will not set the ACCERR flag. The CBEIF flag is cleared by writing a 1 to CBEIF. The CBEIF flag is used together with the CBEIE bit in the FCNFG register to generate an interrupt request (see Figure 28-32). 0 Command buffers are full. 1 Command buffers are ready to accept a new command.
6 CCIF	**Command Complete Interrupt Flag** — The CCIF flag indicates that there are no more commands pending. The CCIF flag is cleared when CBEIF is cleared and sets automatically upon completion of all active and pending commands. The CCIF flag does not set when an active commands completes and a pending command is fetched from the command buffer. Writing to the CCIF flag has no effect on CCIF. The CCIF flag is used together with the CCIE bit in the FCNFG register to generate an interrupt request (see Figure 28-32). 0 Command in progress. 1 All commands are completed.
5 PVIOL	**Protection Violation Flag** —The PVIOL flag indicates an attempt was made to program or erase an address in a protected area of the Flash memory during a command write sequence. Writing a 0 to the PVIOL flag has no effect on PVIOL. The PVIOL flag is cleared by writing a 1 to PVIOL. While PVIOL is set, it is not possible to launch a command or start a command write sequence. 0 No protection violation detected. 1 Protection violation has occurred.
4 ACCERR	**Access Error Flag** — The ACCERR flag indicates an illegal access has occurred to the Flash memory caused by either a violation of the command write sequence (see Section 28.4.1.2, “Command Write Sequence”), issuing an illegal Flash command (see Table 28-16), launching the sector erase abort command terminating a sector erase operation early (see Section 28.4.2.6, “Sector Erase Abort Command”) or the execution of a CPU STOP instruction while a command is executing (CCIF = 0). Writing a 0 to the ACCERR flag has no effect on ACCERR. The ACCERR flag is cleared by writing a 1 to ACCERR.While ACCERR is set, it is not possible to launch a command or start a command write sequence. If ACCERR is set by an erase verify operation or a data compress operation, any buffered command will not launch. 0 No access error detected. 1 Access error has occurred.
2 BLANK	**Flag Indicating the Erase Verify Operation Status** — When the CCIF flag is set after completion of an erase verify command, the BLANK flag indicates the result of the erase verify operation. The BLANK flag is cleared by the Flash module when CBEIF is cleared as part of a new valid command write sequence. Writing to the BLANK flag has no effect on BLANK. 0 Flash block verified as not erased. 1 Flash block verified as erased.
1 FAIL	**Flag Indicating a Failed Flash Operation** — The FAIL flag will set if the erase verify operation fails (selected Flash block verified as not erased). Writing a 0 to the FAIL flag has no effect on FAIL. The FAIL flag is cleared by writing a 1 to FAIL. 0 Flash operation completed without error. 1 Flash operation failed.

28.3.2.7 Flash Command Register (FCMD)

The FCMD register is the Flash command register.

	7	6	5	4	3	2	1	0
R	0	CMDB						
W								
Reset	1	1	0	0	0	0	0	0

= Unimplemented or Reserved

Figure 28-14. Flash Command Register (FCMD)

All CMDB bits are readable and writable during a command write sequence while bit 7 reads 0 and is not writable.

Table 28-15. FCMD Field Descriptions

Field	Description
6:0 CMDB[6:0]	**Flash Command** — Valid Flash commands are shown in Table 28-16. Writing any command other than those listed in Table 28-16 sets the ACCERR flag in the FSTAT register.

Table 28-16. Valid Flash Command List

CMDB[6:0]	NVM Command
0x05	Erase Verify
0x06	Data Compress
0x20	Word Program
0x40	Sector Erase
0x41	Mass Erase
0x47	Sector Erase Abort

28.3.2.8 Flash Control Register (FCTL)

The FCTL register is the Flash control register.

	7	6	5	4	3	2	1	0
R	0	NV6	NV5	NV4	NV3	NV2	NV1	NV0
W								
Reset	0	F	F	F	F	F	F	F

= Unimplemented or Reserved

Figure 28-15. Flash Control Register (FCTL)

All bits in the FCTL register are readable but are not writable.

The FCTL NV bits are loaded from the Flash nonvolatile byte located at global address 0x7F_FF0E during the reset sequence, indicated by F in Figure 28-15.

Table 28-17. FCTL Field Descriptions

Field	Description
6:0 NV[6:0]	**Nonvolatile Bits** — The NV[6:0] bits are available as nonvolatile bits. Refer to the Device User Guide for proper use of the NV bits.

28.3.2.9 Flash Address Registers (FADDR)

The FADDRHI and FADDRLO registers are the Flash address registers.

	7	6	5	4	3	2	1	0
R	FADDRHI							
W								
Reset	0	0	0	0	0	0	0	0

= Unimplemented or Reserved

Figure 28-16. Flash Address High Register (FADDRHI)

	7	6	5	4	3	2	1	0
R	FADDRLO							
W								
Reset	0	0	0	0	0	0	0	0

= Unimplemented or Reserved

Figure 28-17. Flash Address Low Register (FADDRLO)

All FADDRHI and FADDRLO bits are readable but are not writable. After an array write as part of a command write sequence, the FADDR registers will contain the mapped MCU address written.

28.3.2.10 Flash Data Registers (FDATA)

The FDATAHI and FDATALO registers are the Flash data registers.

	7	6	5	4	3	2	1	0
R	FDATAHI							
W								
Reset	0	0	0	0	0	0	0	0

= Unimplemented or Reserved

Figure 28-18. Flash Data High Register (FDATAHI)

	7	6	5	4	3	2	1	0
R	FDATALO							
W								
Reset	0	0	0	0	0	0	0	0

= Unimplemented or Reserved

Figure 28-19. Flash Data Low Register (FDATALO)

All FDATAHI and FDATALO bits are readable but are not writable. At the completion of a data compress operation, the resulting 16-bit signature is stored in the FDATA registers. The data compression signature is readable in the FDATA registers until a new command write sequence is started.

28.3.2.11 RESERVED1

This register is reserved for factory testing and is not accessible.

	7	6	5	4	3	2	1	0
R	0	0	0	0	0	0	0	0
W								
Reset	0	0	0	0	0	0	0	0

= Unimplemented or Reserved

Figure 28-20. RESERVED1

All bits read 0 and are not writable.

28.3.2.12 RESERVED2

This register is reserved for factory testing and is not accessible.

	7	6	5	4	3	2	1	0
R	0	0	0	0	0	0	0	0
W								
Reset	0	0	0	0	0	0	0	0

= Unimplemented or Reserved

Figure 28-21. RESERVED2

All bits read 0 and are not writable.

28.3.2.13 RESERVED3

This register is reserved for factory testing and is not accessible.

	7	6	5	4	3	2	1	0
R	0	0	0	0	0	0	0	0
W								
Reset	0	0	0	0	0	0	0	0

= Unimplemented or Reserved

Figure 28-22. RESERVED3

All bits read 0 and are not writable.

28.3.2.14 RESERVED4

This register is reserved for factory testing and is not accessible.

	7	6	5	4	3	2	1	0
R	0	0	0	0	0	0	0	0
W								
Reset	0	0	0	0	0	0	0	0

= Unimplemented or Reserved

Figure 28-23. RESERVED4

All bits read 0 and are not writable.

28.4 Functional Description

28.4.1 Flash Command Operations

Write operations are used to execute program, erase, erase verify, erase abort, and data compress algorithms described in this section. The program and erase algorithms are controlled by a state machine whose timebase, FCLK, is derived from the oscillator clock via a programmable divider. The command register, as well as the associated address and data registers, operate as a buffer and a register (2-stage FIFO) so that a second command along with the necessary data and address can be stored to the buffer while the first command is still in progress. This pipelined operation allows a time optimization when programming more than one word on a specific row in the Flash block as the high voltage generation can be kept active in between two programming commands. The pipelined operation also allows a simplification of command launching. Buffer empty as well as command completion are signalled by flags in the Flash status register with corresponding interrupts generated, if enabled.

The next sections describe:

1. How to write the FCLKDIV register
2. Command write sequences to program, erase, erase verify, erase abort, and data compress operations on the Flash memory
3. Valid Flash commands
4. Effects resulting from illegal Flash command write sequences or aborting Flash operations

28.4.1.1 Writing the FCLKDIV Register

Prior to issuing any Flash command after a reset, the user is required to write the FCLKDIV register to divide the oscillator clock down to within the 150 kHz to 200 kHz range. Since the program and erase timings are also a function of the bus clock, the FCLKDIV determination must take this information into account.

If we define:

- FCLK as the clock of the Flash timing control block
- Tbus as the period of the bus clock
- INT(x) as taking the integer part of x (e.g. INT(4.323) = 4)

then FCLKDIV register bits PRDIV8 and FDIV[5:0] are to be set as described in Figure 28-24.

For example, if the oscillator clock frequency is 950kHz and the bus clock frequency is 10MHz, FCLKDIV bits FDIV[5:0] should be set to 0x04 (000100) and bit PRDIV8 set to 0. The resulting FCLK frequency is then 190kHz. As a result, the Flash program and erase algorithm timings are increased over the optimum target by:

$$(200 - 190)/200 \times 100 = 5\%$$

If the oscillator clock frequency is 16MHz and the bus clock frequency is 40MHz, FCLKDIV bits FDIV[5:0] should be set to 0x0A (001010) and bit PRDIV8 set to 1. The resulting FCLK frequency is then 182kHz. In this case, the Flash program and erase algorithm timings are increased over the optimum target by:

$$(200 - 182)/200 \times 100 = 9\%$$

CAUTION

Program and erase command execution time will increase proportionally with the period of FCLK. Because of the impact of clock synchronization on the accuracy of the functional timings, programming or erasing the Flash memory cannot be performed if the bus clock runs at less than 1 MHz. Programming or erasing the Flash memory with FCLK < 150 kHz should be avoided. Setting FCLKDIV to a value such that FCLK < 150 kHz can destroy the Flash memory due to overstress. Setting FCLKDIV to a value such that (1/FCLK+Tbus) < 5µs can result in incomplete programming or erasure of the Flash memory cells.

If the FCLKDIV register is written, the FDIVLD bit is set automatically. If the FDIVLD bit is 0, the FCLKDIV register has not been written since the last reset. If the FCLKDIV register has not been written to, the Flash command loaded during a command write sequence will not execute and the ACCERR flag in the FSTAT register will set.

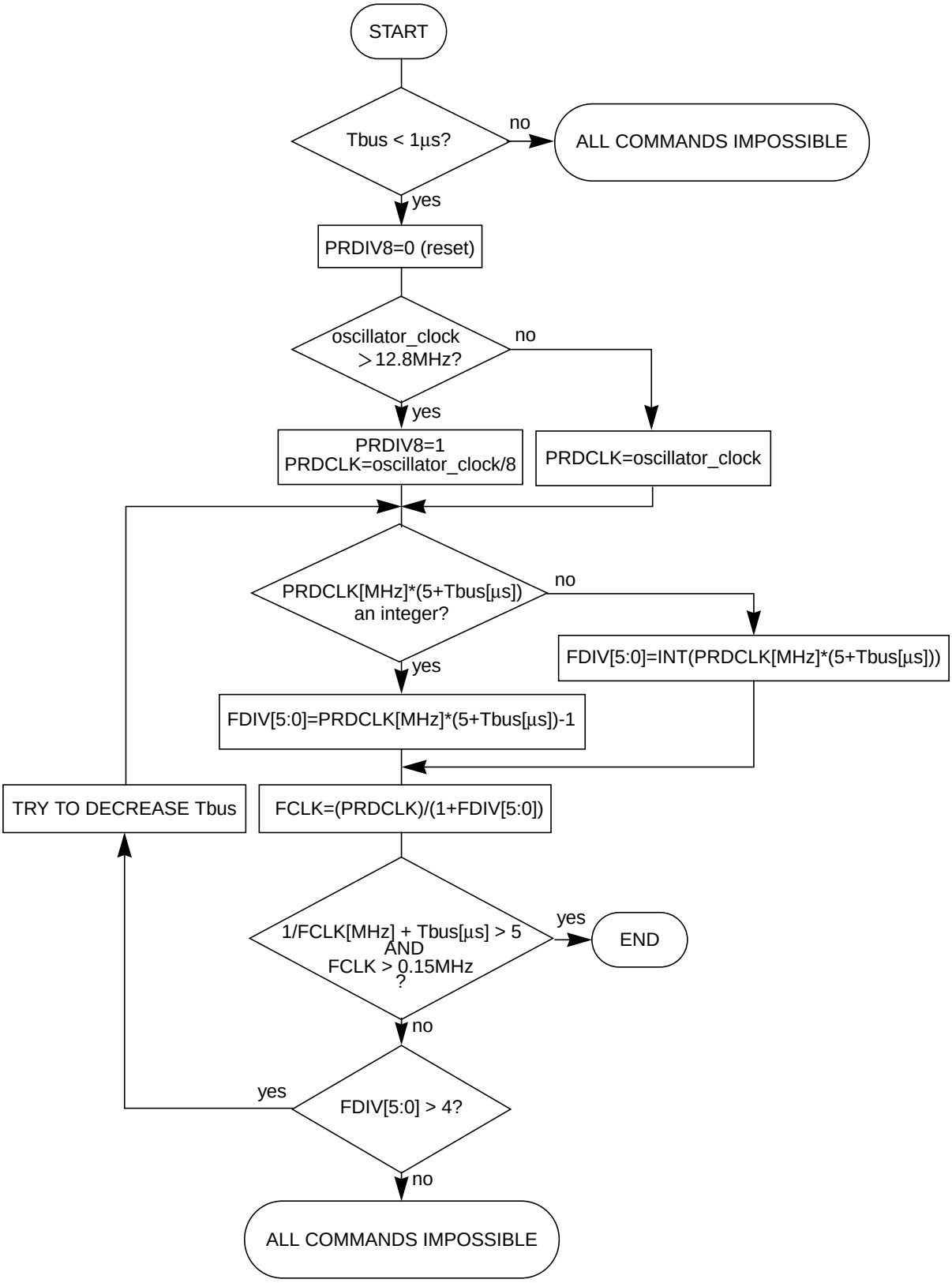

Figure 28-24. Determination Procedure for PRDIV8 and FDIV Bits

28.4.1.2 Command Write Sequence

The Flash command controller is used to supervise the command write sequence to execute program, erase, erase verify, erase abort, and data compress algorithms.

Before starting a command write sequence, the ACCERR and PVIOL flags in the FSTAT register must be clear (see Section 28.3.2.6, "Flash Status Register (FSTAT)") and the CBEIF flag should be tested to determine the state of the address, data and command buffers. If the CBEIF flag is set, indicating the buffers are empty, a new command write sequence can be started. If the CBEIF flag is clear, indicating the buffers are not available, a new command write sequence will overwrite the contents of the address, data and command buffers.

A command write sequence consists of three steps which must be strictly adhered to with writes to the Flash module not permitted between the steps. However, Flash register and array reads are allowed during a command write sequence. The basic command write sequence is as follows:

1. Write to a valid address in the Flash memory. Addresses in multiple Flash blocks can be written to as long as the location is at the same relative address in each available Flash block. Multiple addresses must be written in Flash block order starting with the lower Flash block.
2. Write a valid command to the FCMD register.
3. Clear the CBEIF flag in the FSTAT register by writing a 1 to CBEIF to launch the command.

The address written in step 1 will be stored in the FADDR registers and the data will be stored in the FDATA registers. If the CBEIF flag in the FSTAT register is clear when the first Flash array write occurs, the contents of the address and data buffers will be overwritten and the CBEIF flag will be set. When the CBEIF flag is cleared, the CCIF flag is cleared on the same bus cycle by the Flash command controller indicating that the command was successfully launched. For all command write sequences except data compress and sector erase abort, the CBEIF flag will set four bus cycles after the CCIF flag is cleared indicating that the address, data, and command buffers are ready for a new command write sequence to begin. For data compress and sector erase abort operations, the CBEIF flag will remain clear until the operation completes. Except for the sector erase abort command, a buffered command will wait for the active operation to be completed before being launched. The sector erase abort command is launched when the CBEIF flag is cleared as part of a sector erase abort command write sequence. Once a command is launched, the completion of the command operation is indicated by the setting of the CCIF flag in the FSTAT register. The CCIF flag will set upon completion of all active and buffered commands.

28.4.2 Flash Commands

Table 28-18 summarizes the valid Flash commands along with the effects of the commands on the Flash block.

Table 28-18. Flash Command Description

FCMDB	NVM Command	Function on Flash Memory
0x05	Erase Verify	Verify all memory bytes in the Flash block are erased. If the Flash block is erased, the BLANK flag in the FSTAT register will set upon command completion.

Table 28-18. Flash Command Description

FCMDB	NVM Command	Function on Flash Memory
0x06	Data Compress	Compress data from a selected portion of the Flash block. The resulting signature is stored in the FDATA register.
0x20	Program	Program a word (two bytes) in the Flash block.
0x40	Sector Erase	Erase all memory bytes in a sector of the Flash block.
0x41	Mass Erase	Erase all memory bytes in the Flash block. A mass erase of the full Flash block is only possible when FPLDIS, FPHDIS and FPOPEN bits in the FPROT register are set prior to launching the command.
0x47	Sector Erase Abort	Abort the sector erase operation. The sector erase operation will terminate according to a set procedure. The Flash sector should not be considered erased if the ACCERR flag is set upon command completion.

CAUTION

A Flash word must be in the erased state before being programmed. Cumulative programming of bits within a Flash word is not allowed.

28.4.2.1 Erase Verify Command

The erase verify operation will verify that a Flash block is erased.

An example flow to execute the erase verify operation is shown in Figure 28-25. The erase verify command write sequence is as follows:

1. Write to a Flash block address to start the command write sequence for the erase verify command. The address and data written will be ignored. Multiple Flash blocks can be simultaneously erase verified by writing to the same relative address in each Flash block.
2. Write the erase verify command, 0x05, to the FCMD register.
3. Clear the CBEIF flag in the FSTAT register by writing a 1 to CBEIF to launch the erase verify command.

After launching the erase verify command, the CCIF flag in the FSTAT register will set after the operation has completed unless a new command write sequence has been buffered. The number of bus cycles required to execute the erase verify operation is equal to the number of addresses in a Flash block plus 14 bus cycles as measured from the time the CBEIF flag is cleared until the CCIF flag is set. Upon completion of the erase verify operation, the BLANK flag in the FSTAT register will be set if all addresses in the selected Flash blocks are verified to be erased. If any address in a selected Flash block is not erased, the erase verify operation will terminate and the BLANK flag in the FSTAT register will remain clear. The MRDS bits in the FTSTMOD register will determine the sense-amp margin setting during the erase verify operation.

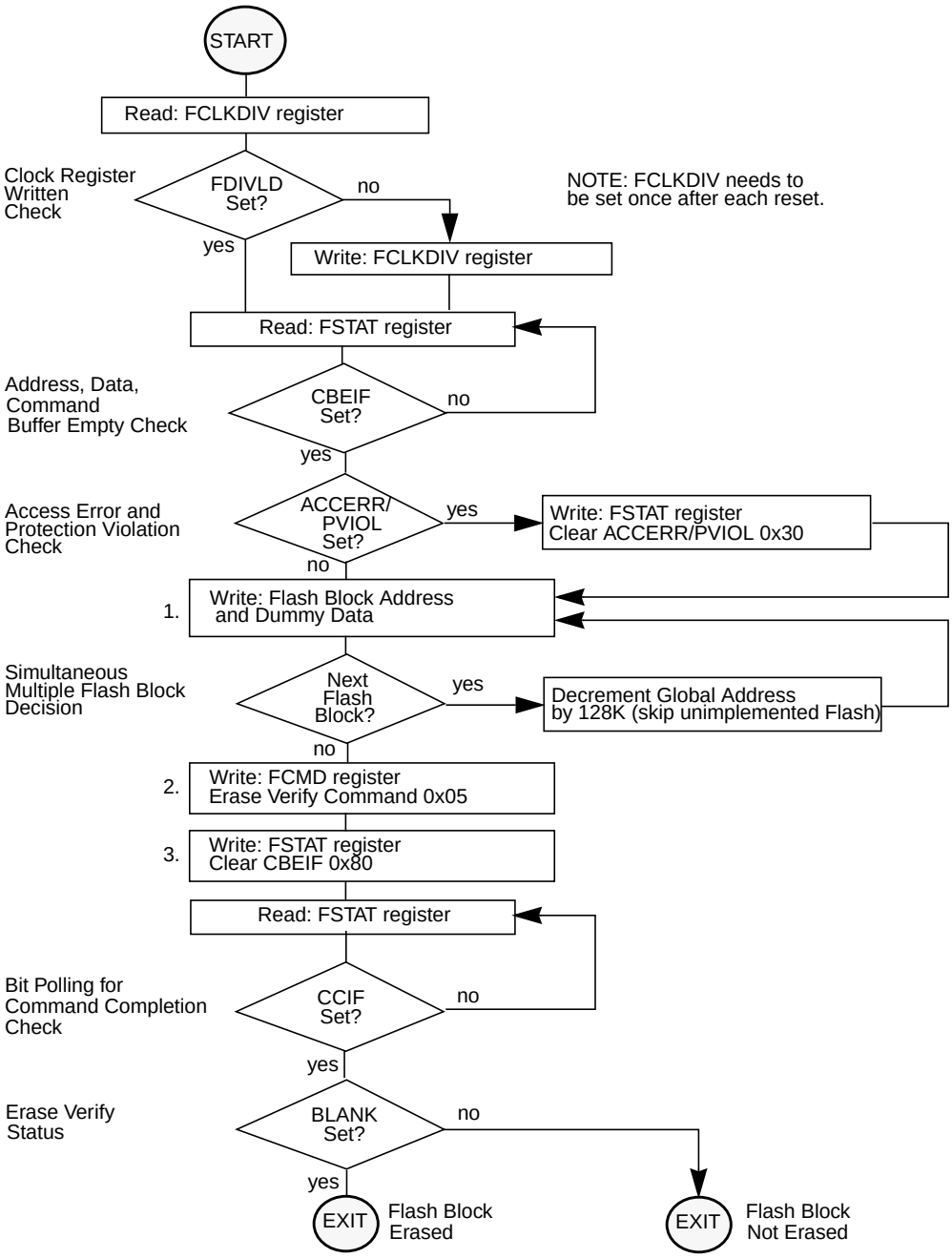

Figure 28-25. Example Erase Verify Command Flow

28.4.2.2 Data Compress Command

The data compress operation will check Flash code integrity by compressing data from a selected portion of the Flash memory into a signature analyzer.

An example flow to execute the data compress operation is shown in Figure 28-26. The data compress command write sequence is as follows:

1. Write to a Flash block address to start the command write sequence for the data compress command. The address written determines the starting address for the data compress operation and the data written determines the number of consecutive words to compress. If the data value written is 0x0000, 64K addresses or 128 Kbytes will be compressed. Multiple Flash blocks can be simultaneously compressed by writing to the same relative address in each Flash block. If more than one Flash block is written to in this step, the first data written will determine the number of consecutive words to compress in each selected Flash block.
2. Write the data compress command, 0x06, to the FCMD register.
3. Clear the CBEIF flag in the FSTAT register by writing a 1 to CBEIF to launch the data compress command.

After launching the data compress command, the CCIF flag in the FSTAT register will set after the data compress operation has completed. The number of bus cycles required to execute the data compress operation is equal to two times the number of consecutive words to compress plus the number of Flash blocks simultaneously compressed plus 18 bus cycles as measured from the time the CBEIF flag is cleared until the CCIF flag is set. Once the CCIF flag is set, the signature generated by the data compress operation is available in the FDATA registers. The signature in the FDATA registers can be compared to the expected signature to determine the integrity of the selected data stored in the selected Flash memory. If the last address of a Flash block is reached during the data compress operation, data compression will continue with the starting address of the same Flash block. The MRDS bits in the FTSTMOD register will determine the sense-amp margin setting during the data compress operation.

NOTE

Since the FDATA registers (or data buffer) are written to as part of the data compress operation, a command write sequence is not allowed to be buffered behind a data compress command write sequence. The CBEIF flag will not set after launching the data compress command to indicate that a command should not be buffered behind it. If an attempt is made to start a new command write sequence with a data compress operation active, the ACCERR flag in the FSTAT register will be set. A new command write sequence should only be started after reading the signature stored in the FDATA registers.

In order to take corrective action, it is recommended that the data compress command be executed on a Flash sector or subset of a Flash sector. If the data compress operation on a Flash sector returns an invalid signature, the Flash sector should be erased using the sector erase command and then reprogrammed using the program command.

The data compress command can be used to verify that a sector or sequential set of sectors are erased.

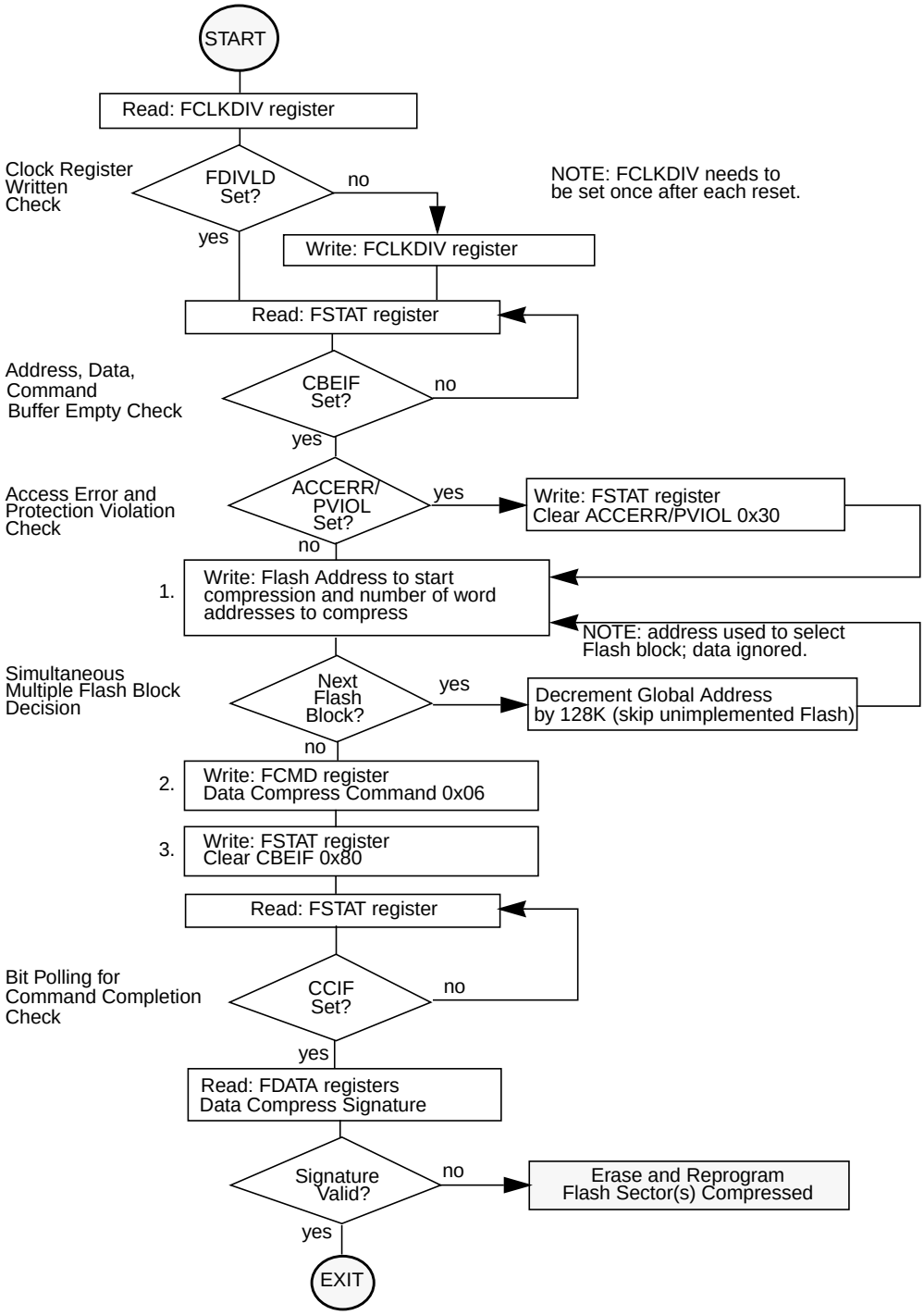

Figure 28-26. Example Data Compress Command Flow

28.4.2.2.1 Data Compress Operation

The Flash module contains a 16-bit multiple-input signature register (MISR) for each Flash block to generate a 16-bit signature based on selected Flash array data. If multiple Flash blocks are selected for simultaneous compression, then the signature from each Flash block is further compressed to generate a single 16-bit signature. The final 16-bit signature, found in the FDATA registers after the data compress operation has completed, is based on the following logic equation which is executed on every data compression cycle during the operation:

MISR[15:0] = {MISR[14:0], ^MISR[15,4,2,1]} ^ DATA[15:0] ***Eqn. 28-1***

where MISR is the content of the internal signature register associated with each Flash block and DATA is the data to be compressed as shown in Figure 28-27.

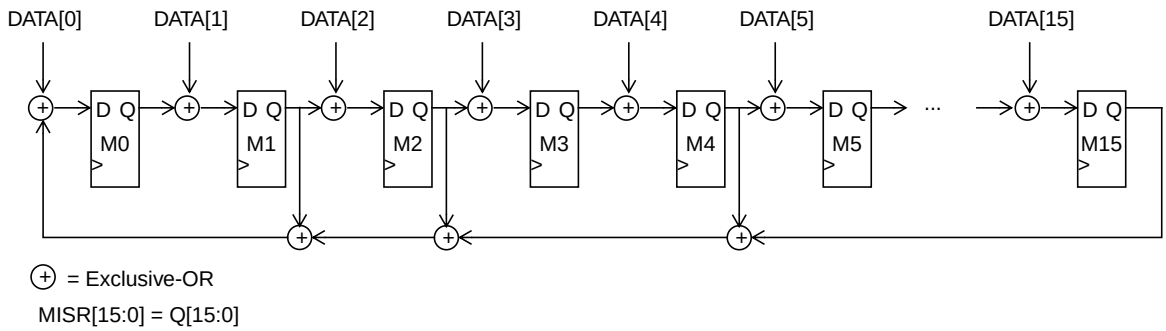

Figure 28-27. 16-Bit MISR Diagram

During the data compress operation, the following steps are executed:

1. MISR for each Flash block is reset to 0xFFFF.
2. Initialized DATA equal to 0xFFFF is compressed into the MISR for each selected Flash block which results in the MISR containing 0x0001.
3. DATA equal to the selected Flash array data range is read and compressed into the MISR for each selected Flash block with addresses incrementing.
4. DATA equal to the selected Flash array data range is read and compressed into the MISR for each selected Flash block with addresses decrementing.
5. If Flash block 0 is selected for compression, DATA equal to the contents of the MISR for Flash block 0 is compressed into the MISR for Flash block 0. If data in Flash block 0 was not selected for compression, the MISR for Flash block 0 contains 0xFFFF.
6. If Flash block 1 is selected for compression, DATA equal to the contents of the MISR for Flash block 1 is compressed into the MISR for Flash block 0.
7. If Flash block 2 is selected for compression, DATA equal to the contents of the MISR for Flash block 2 is compressed into the MISR for Flash block 0.
8. If Flash block 3 is selected for compression, DATA equal to the contents of the MISR for Flash block 3 is compressed into the MISR for Flash block 0.
9. If Flash block 4 is selected for compression, DATA equal to the contents of the MISR for Flash block 4 is compressed into the MISR for Flash block 0.

10. If Flash block 5 is selected for compression, DATA equal to the contents of the MISR for Flash block 5 is compressed into the MISR for Flash block 0.
11. If Flash block 6 is selected for compression, DATA equal to the contents of the MISR for Flash block 6 is compressed into the MISR for Flash block 0.
12. If Flash block 7 is selected for compression, DATA equal to the contents of the MISR for Flash block 7 is compressed into the MISR for Flash block 0.
13. The contents of the MISR for Flash block 0 are written to the FDATA registers.

28.4.2.3 Program Command

The program operation will program a previously erased word in the Flash memory using an embedded algorithm.

An example flow to execute the program operation is shown in Figure 28-28. The program command write sequence is as follows:

1. Write to a Flash block address to start the command write sequence for the program command. The data written will be programmed to the address written. Multiple Flash blocks can be simultaneously programmed by writing to the same relative address in each Flash block.
2. Write the program command, 0x20, to the FCMD register.
3. Clear the CBEIF flag in the FSTAT register by writing a 1 to CBEIF to launch the program command.

If a word to be programmed is in a protected area of the Flash block, the PVIOL flag in the FSTAT register will set and the program command will not launch. Once the program command has successfully launched, the CCIF flag in the FSTAT register will set after the program operation has completed unless a new command write sequence has been buffered. By executing a new program command write sequence on sequential words after the CBEIF flag in the FSTAT register has been set, up to 55% faster programming time per word can be effectively achieved than by waiting for the CCIF flag to set after each program operation.

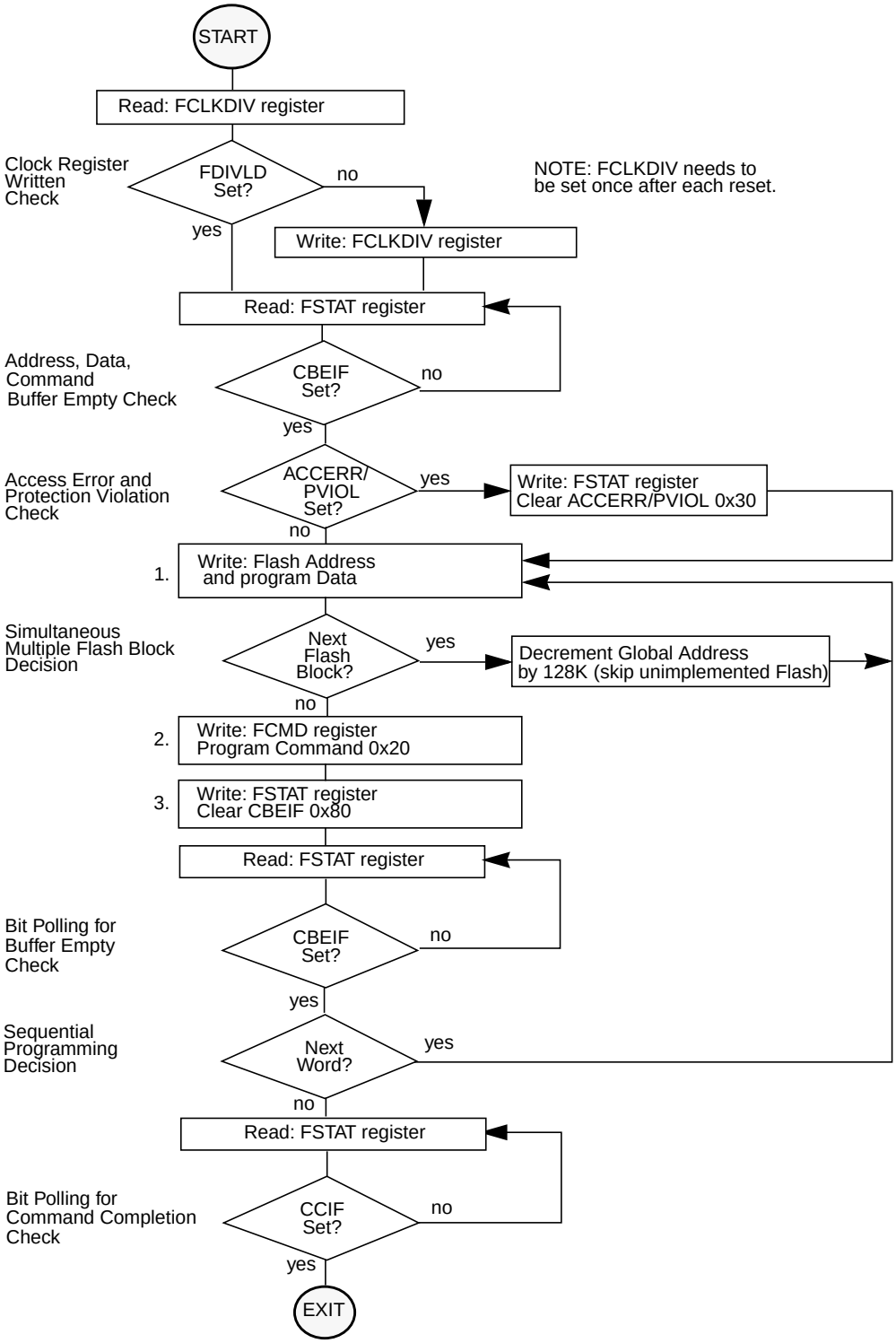

Figure 28-28. Example Program Command Flow

28.4.2.4 Sector Erase Command

The sector erase operation will erase all addresses in a 1 Kbyte sector of Flash memory using an embedded algorithm.

An example flow to execute the sector erase operation is shown in Figure 28-29. The sector erase command write sequence is as follows:

1. Write to a Flash block address to start the command write sequence for the sector erase command. The Flash address written determines the sector to be erased while global address bits [9:0] and the data written are ignored. Multiple Flash sectors can be simultaneously erased by writing to the same relative address in each Flash block.
2. Write the sector erase command, 0x40, to the FCMD register.
3. Clear the CBEIF flag in the FSTAT register by writing a 1 to CBEIF to launch the sector erase command.

If a Flash sector to be erased is in a protected area of the Flash block, the PVIOL flag in the FSTAT register will set and the sector erase command will not launch. Once the sector erase command has successfully launched, the CCIF flag in the FSTAT register will set after the sector erase operation has completed unless a new command write sequence has been buffered.

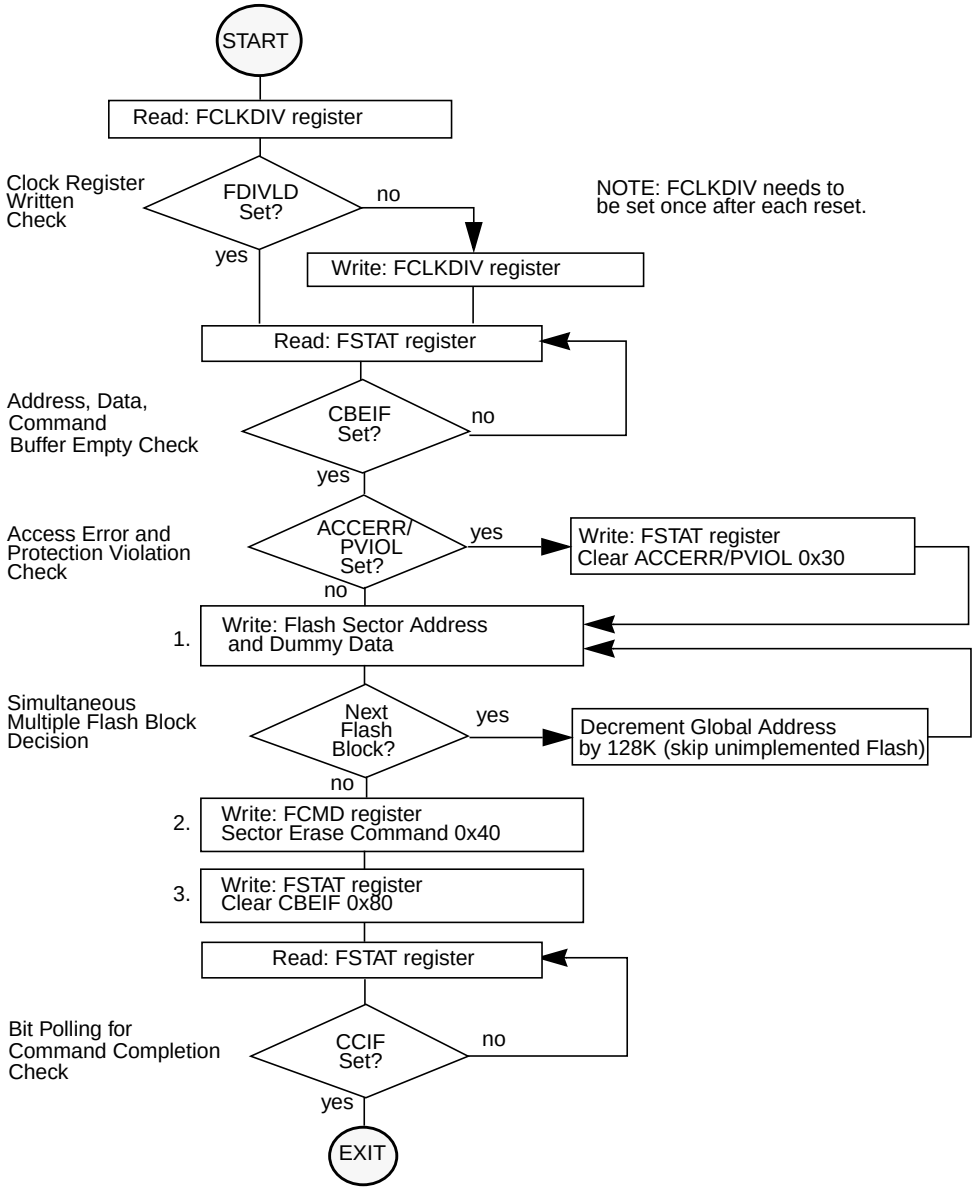

Figure 28-29. Example Sector Erase Command Flow

28.4.2.5 Mass Erase Command

The mass erase operation will erase all addresses in a Flash block using an embedded algorithm.

An example flow to execute the mass erase operation is shown in Figure 28-30. The mass erase command write sequence is as follows:

1. Write to a Flash block address to start the command write sequence for the mass erase command. The address and data written will be ignored. Multiple Flash blocks can be simultaneously mass erased by writing to the same relative address in each Flash block.
2. Write the mass erase command, 0x41, to the FCMD register.
3. Clear the CBEIF flag in the FSTAT register by writing a 1 to CBEIF to launch the mass erase command.

If a Flash block to be erased contains any protected area, the PVIOL flag in the FSTAT register will set and the mass erase command will not launch. Once the mass erase command has successfully launched, the CCIF flag in the FSTAT register will set after the mass erase operation has completed unless a new command write sequence has been buffered.

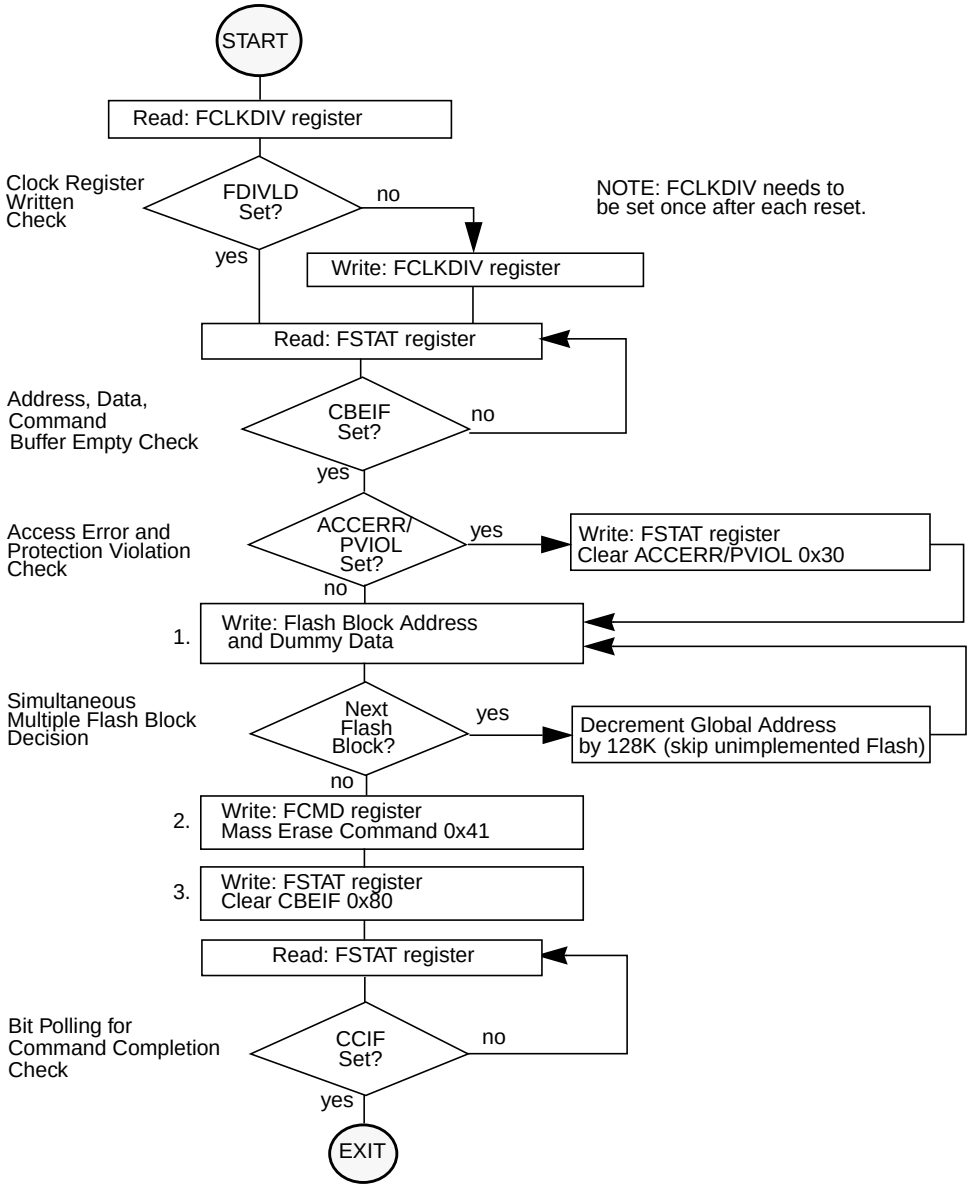

Figure 28-30. Example Mass Erase Command Flow

28.4.2.6 Sector Erase Abort Command

The sector erase abort operation will terminate the active sector erase operation so that other sectors in a Flash block are available for read and program operations without waiting for the sector erase operation to complete.

An example flow to execute the sector erase abort operation is shown in Figure 28-31. The sector erase abort command write sequence is as follows:

1. Write to any Flash block address to start the command write sequence for the sector erase abort command. The address and data written are ignored.
2. Write the sector erase abort command, 0x47, to the FCMD register.
3. Clear the CBEIF flag in the FSTAT register by writing a 1 to CBEIF to launch the sector erase abort command.

If the sector erase abort command is launched resulting in the early termination of an active sector erase operation, the ACCERR flag will set once the operation completes as indicated by the CCIF flag being set. The ACCERR flag sets to inform the user that the Flash sector may not be fully erased and a new sector erase command must be launched before programming any location in that specific sector. If the sector erase abort command is launched but the active sector erase operation completes normally, the ACCERR flag will not set upon completion of the operation as indicated by the CCIF flag being set. Therefore, if the ACCERR flag is not set after the sector erase abort command has completed, a Flash sector being erased when the abort command was launched will be fully erased. The maximum number of cycles required to abort a sector erase operation is equal to four FCLK periods (see Section 28.4.1.1, “Writing the FCLKDIV Register”) plus five bus cycles as measured from the time the CBEIF flag is cleared until the CCIF flag is set. If sectors in multiple Flash blocks are being simultaneously erased, the sector erase abort operation will be applied to all active Flash blocks without writing to each Flash block in the sector erase abort command write sequence.

NOTE

Since the ACCERR bit in the FSTAT register may be set at the completion of the sector erase abort operation, a command write sequence is not allowed to be buffered behind a sector erase abort command write sequence. The CBEIF flag will not set after launching the sector erase abort command to indicate that a command should not be buffered behind it. If an attempt is made to start a new command write sequence with a sector erase abort operation active, the ACCERR flag in the FSTAT register will be set. A new command write sequence may be started after clearing the ACCERR flag, if set.

NOTE

The sector erase abort command should be used sparingly since a sector erase operation that is aborted counts as a complete program/erase cycle.

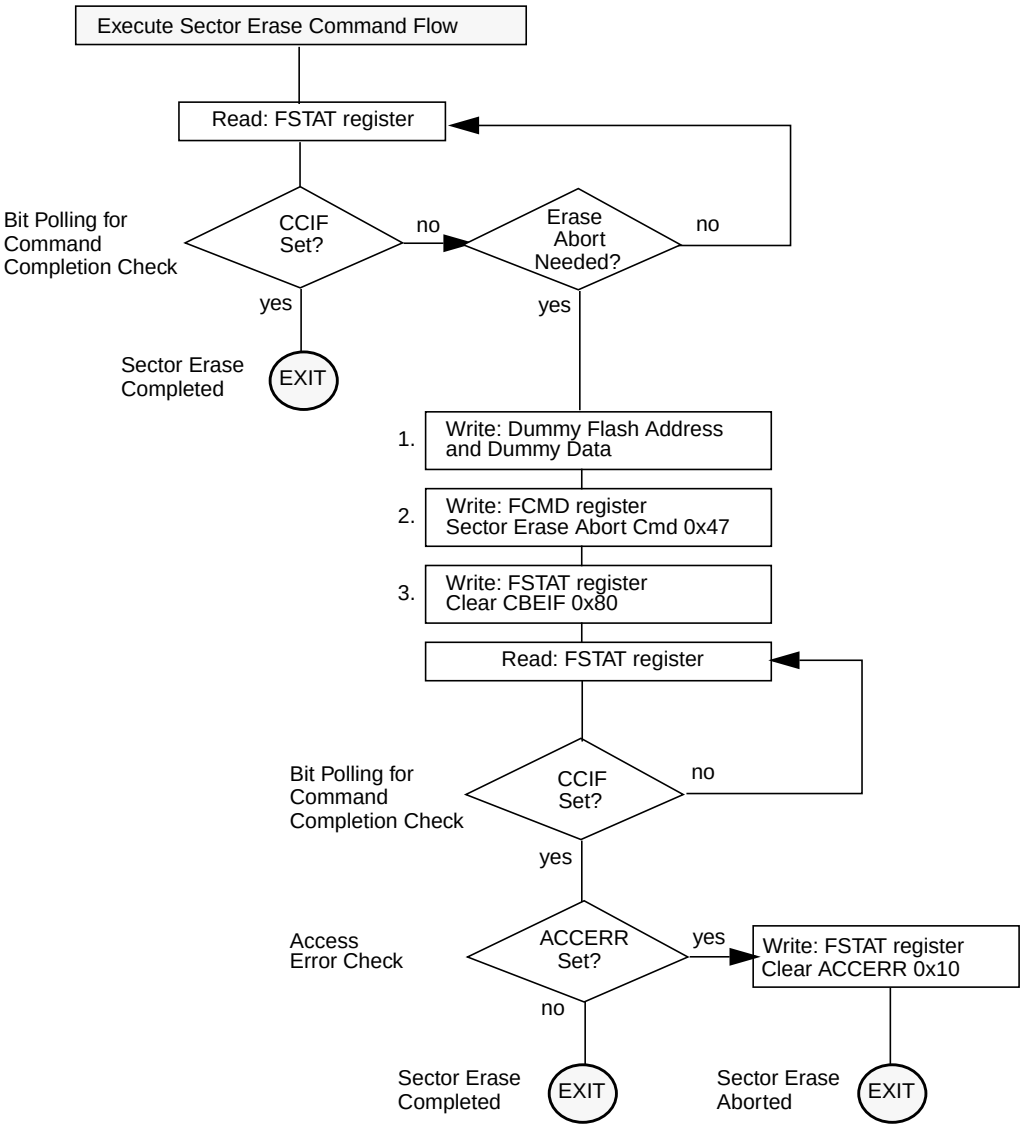

Figure 28-31. Example Sector Erase Abort Command Flow

28.4.3 Illegal Flash Operations

The ACCERR flag will be set during the command write sequence if any of the following illegal steps are performed, causing the command write sequence to immediately abort:

1. Writing to a Flash address before initializing the FCLKDIV register.
2. Writing a byte or misaligned word to a valid Flash address.
3. Starting a command write sequence while a data compress operation is active.
4. Starting a command write sequence while a sector erase abort operation is active.
5. Writing a Flash address in step 1 of a command write sequence that is not the same relative address as the first one written in the same command write sequence.
6. Writing to any Flash register other than FCMD after writing to a Flash address.
7. Writing a second command to the FCMD register in the same command write sequence.
8. Writing an invalid command to the FCMD register.
9. When security is enabled, writing a command other than mass erase to the FCMD register when the write originates from a non-secure memory location or from the Background Debug Mode.
10. Writing to a Flash address after writing to the FCMD register.
11. Writing to any Flash register other than FSTAT (to clear CBEIF) after writing to the FCMD register.
12. Writing a 0 to the CBEIF flag in the FSTAT register to abort a command write sequence.

The ACCERR flag will not be set if any Flash register is read during a valid command write sequence.

The ACCERR flag will also be set if any of the following events occur:

1. Launching the sector erase abort command while a sector erase operation is active which results in the early termination of the sector erase operation (see Section 28.4.2.6, “Sector Erase Abort Command”).
2. The MCU enters stop mode and a program or erase operation is in progress. The operation is aborted immediately and any pending command is purged (see Section 28.5.2, “Stop Mode”).

If the Flash memory is read during execution of an algorithm (CCIF = 0), the read operation will return invalid data and the ACCERR flag will not be set.

If the ACCERR flag is set in the FSTAT register, the user must clear the ACCERR flag before starting another command write sequence (see Section 28.3.2.6, “Flash Status Register (FSTAT)”).

The PVIOL flag will be set after the command is written to the FCMD register during a command write sequence if any of the following illegal operations are attempted, causing the command write sequence to immediately abort:

1. Writing the program command if an address written in the command write sequence was in a protected area of the Flash memory
2. Writing the sector erase command if an address written in the command write sequence was in a protected area of the Flash memory
3. Writing the mass erase command to a Flash block while any Flash protection is enabled in the block

If the PVIOL flag is set in the FSTAT register, the user must clear the PVIOL flag before starting another command write sequence (see Section 28.3.2.6, “Flash Status Register (FSTAT)”).

28.5 Operating Modes

28.5.1 Wait Mode

If a command is active (CCIF = 0) when the MCU enters wait mode, the active command and any buffered command will be completed.

The Flash module can recover the MCU from wait mode if the CBEIF and CCIF interrupts are enabled (see Section 28.8, “Interrupts”).

28.5.2 Stop Mode

If a command is active (CCIF = 0) when the MCU enters stop mode, the operation will be aborted and, if the operation is program or erase, the Flash array data being programmed or erased may be corrupted and the CCIF and ACCERR flags will be set. If active, the high voltage circuitry to the Flash memory will immediately be switched off when entering stop mode. Upon exit from stop mode, the CBEIF flag is set and any buffered command will not be launched. The ACCERR flag must be cleared before starting a command write sequence (see Section 28.4.1.2, “Command Write Sequence”).

NOTE

As active commands are immediately aborted when the MCU enters stop mode, it is strongly recommended that the user does not use the STOP instruction during program or erase operations.

28.5.3 Background Debug Mode

In background debug mode (BDM), the FPROT register is writable. If the MCU is unsecured, then all Flash commands listed in Table 28-18 can be executed. If the MCU is secured and is in special single chip mode, only mass erase can be executed.

28.6 Flash Module Security

The Flash module provides the necessary security information to the MCU. After each reset, the Flash module determines the security state of the MCU as defined in Section 28.3.2.2, “Flash Security Register (FSEC)”.

The contents of the Flash security byte at 0x7F_FF0F in the Flash Configuration Field must be changed directly by programming 0x7F_FF0F when the MCU is unsecured and the higher address sector is unprotected. If the Flash security byte is left in a secured state, any reset will cause the MCU to initialize to a secure operating mode.

28.6.1 Unsecuring the MCU using Backdoor Key Access

The MCU may be unsecured by using the backdoor key access feature which requires knowledge of the contents of the backdoor keys (four 16-bit words programmed at addresses 0x7F_FF00–0x7F_FF07). If the KEYEN[1:0] bits are in the enabled state (see Section 28.3.2.2, “Flash Security Register (FSEC)”) and the KEYACC bit is set, a write to a backdoor key address in the Flash memory triggers a comparison between the written data and the backdoor key data stored in the Flash memory. If all four words of data are written to the correct addresses in the correct order and the data matches the backdoor keys stored in the Flash memory, the MCU will be unsecured. The data must be written to the backdoor keys sequentially starting with 0x7F_FF00–1 and ending with 0x7F_FF06–7. 0x0000 and 0xFFFF are not permitted as backdoor keys. While the KEYACC bit is set, reads of the Flash memory will return invalid data.

The user code stored in the Flash memory must have a method of receiving the backdoor keys from an external stimulus. This external stimulus would typically be through one of the on-chip serial ports.

If the KEYEN[1:0] bits are in the enabled state (see Section 28.3.2.2, “Flash Security Register (FSEC)”), the MCU can be unsecured by the backdoor key access sequence described below:

1. Set the KEYACC bit in the Flash Configuration Register (FCNFG).
2. Write the correct four 16-bit words to Flash addresses 0xFF00–0xFF07 sequentially starting with 0x7F_FF00.
3. Clear the KEYACC bit. Depending on the user code used to write the backdoor keys, a wait cycle (NOP) may be required before clearing the KEYACC bit.
4. If all four 16-bit words match the backdoor keys stored in Flash addresses 0x7F_FF00–0x7F_FF07, the MCU is unsecured and the SEC[1:0] bits in the FSEC register are forced to the unsecure state of 1:0.

The backdoor key access sequence is monitored by an internal security state machine. An illegal operation during the backdoor key access sequence will cause the security state machine to lock, leaving the MCU in the secured state. A reset of the MCU will cause the security state machine to exit the lock state and allow a new backdoor key access sequence to be attempted. The following operations during the backdoor key access sequence will lock the security state machine:

1. If any of the four 16-bit words does not match the backdoor keys programmed in the Flash array.
2. If the four 16-bit words are written in the wrong sequence.
3. If more than four 16-bit words are written.
4. If any of the four 16-bit words written are 0x0000 or 0xFFFF.
5. If the KEYACC bit does not remain set while the four 16-bit words are written.
6. If any two of the four 16-bit words are written on successive MCU clock cycles.

After the backdoor keys have been correctly matched, the MCU will be unsecured. Once the MCU is unsecured, the Flash security byte can be programmed to the unsecure state, if desired.

In the unsecure state, the user has full control of the contents of the backdoor keys by programming addresses 0x7F_FF00–0x7F_FF07 in the Flash Configuration Field.

The security as defined in the Flash security byte (0x7F_FF0F) is not changed by using the backdoor key access sequence to unsecure. The backdoor keys stored in addresses 0x7F_FF00–0x7F_FF07 are

unaffected by the backdoor key access sequence. After the next reset of the MCU, the security state of the Flash module is determined by the Flash security byte (0x7F_FF0F). The backdoor key access sequence has no effect on the program and erase protections defined in the Flash protection register.

It is not possible to unsecure the MCU in special single chip mode by using the backdoor key access sequence in background debug mode (BDM).

28.6.2 Unsecuring the MCU in Special Single Chip Mode using BDM

The MCU can be unsecured in special single chip mode by erasing the Flash module by the following method:

- Reset the MCU into special single chip mode, delay while the erase test is performed by the BDM secure ROM, send BDM commands to disable protection in the Flash module, and execute a mass erase command write sequence to erase the Flash memory.

After the CCIF flag sets to indicate that the mass operation has completed, reset the MCU into special single chip mode. The BDM secure ROM will verify that the Flash memory is erased and will assert the UNSEC bit in the BDM status register. This BDM action will cause the MCU to override the Flash security state and the MCU will be unsecured. All BDM commands will be enabled and the Flash security byte may be programmed to the unsecure state by the following method:

- Send BDM commands to execute a word program sequence to program the Flash security byte to the unsecured state and reset the MCU.

28.7 Resets

28.7.1 Flash Reset Sequence

On each reset, the Flash module executes a reset sequence to hold CPU activity while loading the following registers from the Flash memory according to Table 28-1:

- FPROT — Flash Protection Register (see Section 28.3.2.5).
- FCTL - Flash Control Register (see Section 28.3.2.8).
- FSEC — Flash Security Register (see Section 28.3.2.2).

28.7.2 Reset While Flash Command Active

If a reset occurs while any Flash command is in progress, that command will be immediately aborted. The state of the word being programmed or the sector/block being erased is not guaranteed.

28.8 Interrupts

The Flash module can generate an interrupt when all Flash command operations have completed, when the Flash address, data and command buffers are empty.

Table 28-19. Flash Interrupt Sources

Interrupt Source	Interrupt Flag	Local Enable	Global (CCR) Mask
Flash Address, Data and Command Buffers empty	CBEIF (FSTAT register)	CBEIE (FCNFG register)	I Bit
All Flash commands completed	CCIF (FSTAT register)	CCIE (FCNFG register)	I Bit

NOTE

Vector addresses and their relative interrupt priority are determined at the MCU level.

28.8.1 Description of Flash Interrupt Operation

The logic used for generating interrupts is shown in Figure 28-32.

The Flash module uses the CBEIF and CCIF flags in combination with the CBIE and CCIE enable bits to generate the Flash command interrupt request.

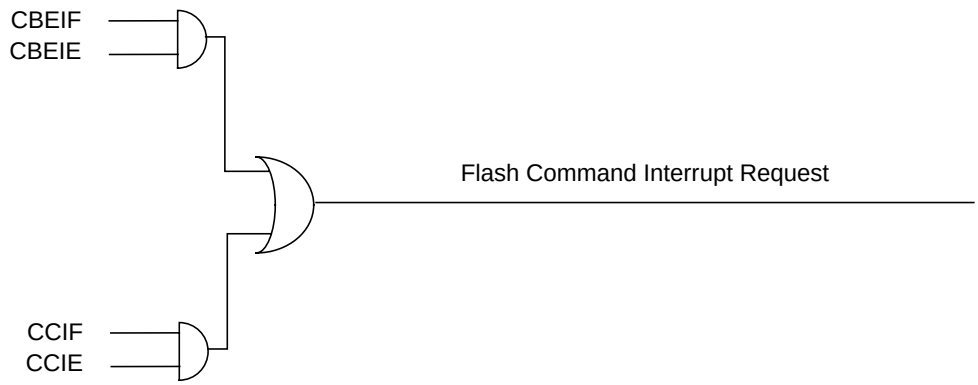

Figure 28-32. Flash Interrupt Implementation

For a detailed description of the register bits, refer to Section 28.3.2.4, “Flash Configuration Register (FCNFG)” and Section 28.3.2.6, “Flash Status Register (FSTAT)” .

Chapter 29
128 Kbyte Flash Module (S12XFTX128K1V1)

29.1 Introduction

This document describes the FTX128K1 module that includes a 128 Kbyte Flash (nonvolatile) memory. The Flash memory may be read as either bytes, aligned words or misaligned words. Read access time is one bus cycle for bytes and aligned words, and two bus cycles for misaligned words.

The Flash memory is ideal for program and data storage for single-supply applications allowing for field reprogramming without requiring external voltage sources for program or erase. Program and erase functions are controlled by a command driven interface. The Flash module supports both block erase and sector erase. An erased bit reads 1 and a programmed bit reads 0. The high voltage required to program and erase the Flash memory is generated internally. It is not possible to read from a Flash block while it is being erased or programmed.

CAUTION

A Flash word must be in the erased state before being programmed.
Cumulative programming of bits within a Flash word is not allowed.

29.1.1 Glossary

Command Write Sequence — A three-step MCU instruction sequence to execute built-in algorithms (including program and erase) on the Flash memory.

Multiple-Input Signature Register (MISR) — A Multiple-Input Signature Register is an output response analyzer implemented using a linear feedback shift-register (LFSR). A 16-bit MISR is used to compress data and generate a signature that is particular to the data read from a Flash block.

29.1.2 Features

- 128 Kbytes of Flash memory comprised of one 128 Kbyte block divided into 128 sectors of 1024 bytes
- Automated program and erase algorithm
- Interrupts on Flash command completion, command buffer empty
- Fast sector erase and word program operation
- 2-stage command pipeline for faster multi-word program times
- Sector erase abort feature for critical interrupt response
- Flexible protection scheme to prevent accidental program or erase
- Single power supply for all Flash operations including program and erase

- Security feature to prevent unauthorized access to the Flash memory
- Code integrity check using built-in data compression

29.1.3 Modes of Operation

Program, erase, erase verify, and data compress operations (please refer to Section 29.4.1, “Flash Command Operations” for details).

29.1.4 Block Diagram

A block diagram of the Flash module is shown in Figure 29-1.

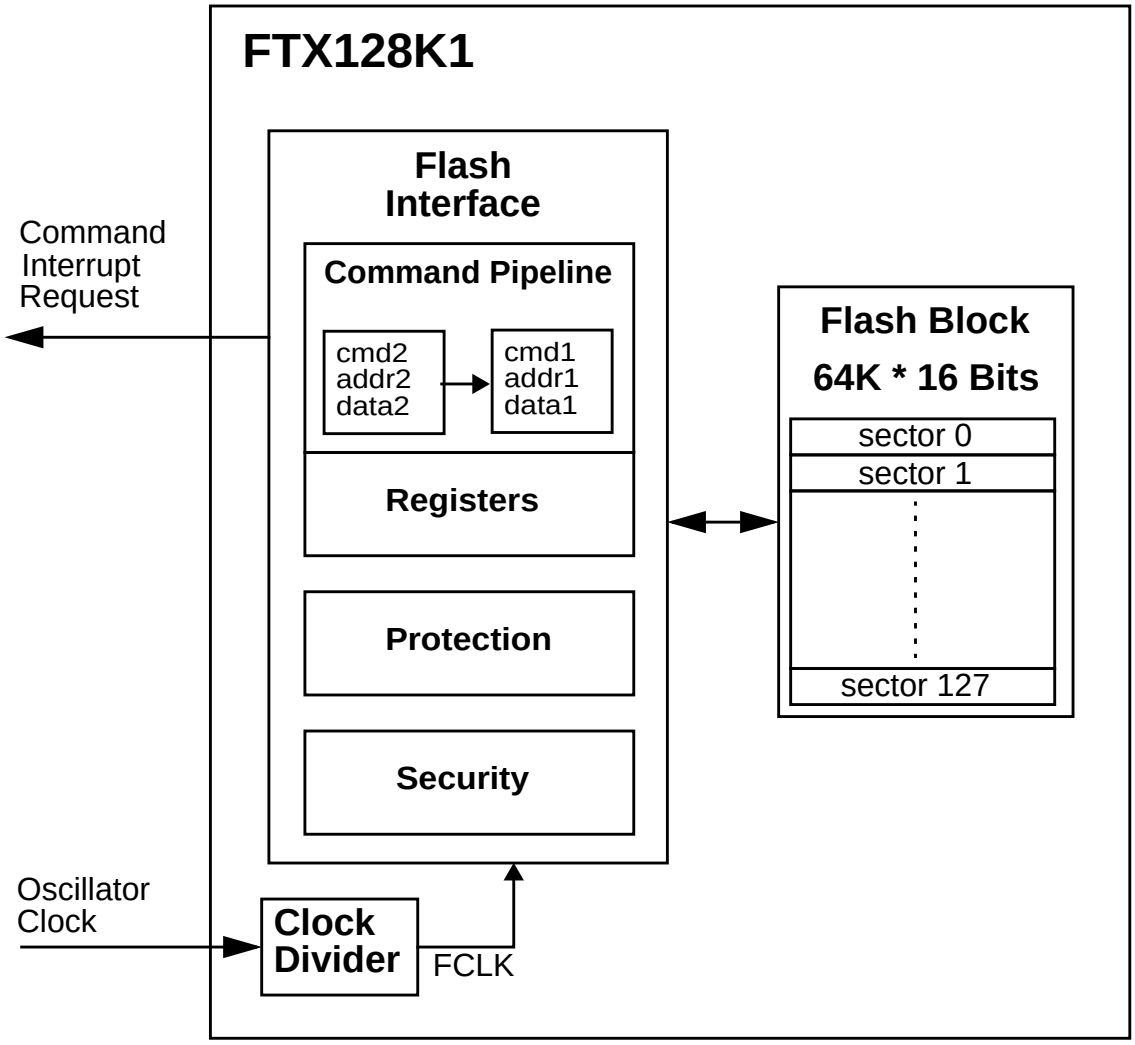

Figure 29-1. FTX128K1 Block Diagram

29.2 External Signal Description

The Flash module contains no signals that connect off-chip.

29.3 Memory Map and Register Definition

This section describes the memory map and registers for the Flash module.

29.3.1 Module Memory Map

The Flash memory map is shown in Figure 29-2. The HCS12X architecture places the Flash memory addresses between global addresses 0x7E_0000 and 0x7F_FFFF. The FPROT register, described in Section 29.3.2.5, “Flash Protection Register (FPROT)”, can be set to protect regions in the Flash memory from accidental program or erase. Three separate memory regions, one growing upward from global address 0x7F_8000 in the Flash memory (called the lower region), one growing downward from global address 0x7F_FFFF in the Flash memory (called the higher region), and the remaining addresses in the Flash memory, can be activated for protection. The Flash memory addresses covered by these protectable regions are shown in the Flash memory map. The higher address region is mainly targeted to hold the boot loader code since it covers the vector space. The lower address region can be used for EEPROM emulation in an MCU without an EEPROM module since it can be left unprotected while the remaining addresses are protected from program or erase. Default protection settings as well as security information that allows the MCU to restrict access to the Flash module are stored in the Flash configuration field as described in Table 29-1.

Table 29-1. Flash Configuration Field

Global Address	Size (Bytes)	Description
0x7F_FF00 – 0x7F_FF07	8	Backdoor Comparison Key Refer to Section 29.6.1, “Unsecuring the MCU using Backdoor Key Access”
0x7F_FF08 – 0x7F_FF0C	5	Reserved
0x7F_FF0D	1	Flash Protection byte Refer to Section 29.3.2.5, “Flash Protection Register (FPROT)”
0x7F_FF0E	1	Flash Nonvolatile byte Refer to Section 29.3.2.8, “Flash Control Register (FCTL)”
0x7F_FF0F	1	Flash Security byte Refer to Section 29.3.2.2, “Flash Security Register (FSEC)”

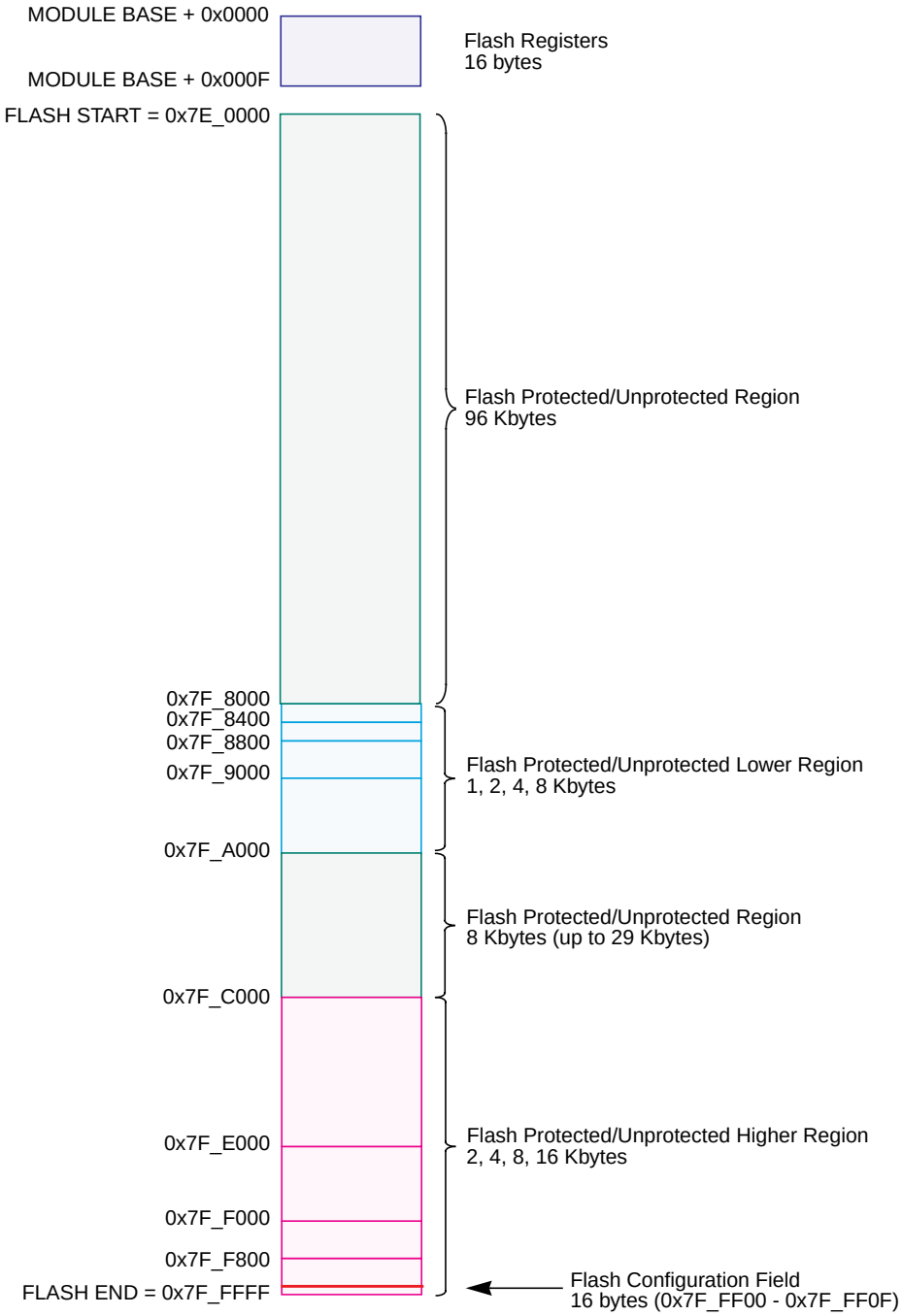

Figure 29-2. Flash Memory Map

29.3.2 Register Descriptions

The Flash module contains a set of 16 control and status registers located between module base + 0x0000 and 0x000F. A summary of the Flash module registers is given in Figure 29-3. Detailed descriptions of each register bit are provided.

Register Name		Bit 7	6	5	4	3	2	1	Bit 0
FCLKDIV	R	FDIVLD	PRDIV8	FDIV5	FDIV4	FDIV3	FDIV2	FDIV1	FDIV0
	W								
FSEC	R	KEYEN		RNV5	RNV4	RNV3	RNV2	SEC	
	W								
FTSTMOD	R	0	MRDS		0	0	0	0	0
	W								
FCNFG	R	CBEIE	CCIE	KEYACC	0	0	0	0	0
	W								
FPROT	R	FPOPEN	RNV6	FPHDIS	FPHS		FPLDIS	FPLS	
	W								
FSTAT	R	CBEIF	CCIF	PVIOL	ACCERR	0	BLANK	0	0
	W								
FCMD	R	0	CMDB						
	W								
FCTL	R	0	NV6	NV5	NV4	NV3	NV2	NV1	NV0
	W								
FADDRHI	R	FADDRHI							
	W								
FADDRLO	R	FADDRLO							
	W								
FDATAHI	R	FDATAHI							
	W								
FDATALO	R	FDATALO							
	W								

Figure 29-3. FTX128K1 Register Summary

Register Name		Bit 7	6	5	4	3	2	1	Bit 0
RESERVED1	R	0	0	0	0	0	0	0	0
	W								
RESERVED2	R	0	0	0	0	0	0	0	0
	W								
RESERVED3	R	0	0	0	0	0	0	0	0
	W								
RESERVED4	R	0	0	0	0	0	0	0	0
	W								

Figure 29-3. FTX128K1 Register Summary (continued)

29.3.2.1 Flash Clock Divider Register (FCLKDIV)

The FCLKDIV register is used to control timed events in program and erase algorithms.

	7	6	5	4	3	2	1	0
R	FDIVLD	PRDIV8	FDIV5	FDIV4	FDIV3	FDIV2	FDIV1	FDIV0
W								
Reset	0	0	0	0	0	0	0	0

= Unimplemented or Reserved

Figure 29-4. Flash Clock Divider Register (FCLKDIV)

All bits in the FCLKDIV register are readable, bits 6-0 are write once and bit 7 is not writable.

Table 29-2. FCLKDIV Field Descriptions

Field	Description
7 FDIVLD	**Clock Divider Loaded.** 0 Register has not been written. 1 Register has been written to since the last reset.
6 PRDIV8	**Enable Prescalar by 8.** 0 The oscillator clock is directly fed into the clock divider. 1 The oscillator clock is divided by 8 before feeding into the clock divider.
5:0 FDIV[5:0]	**Clock Divider Bits** — The combination of PRDIV8 and FDIV[5:0] must divide the oscillator clock down to a frequency of 150 kHz–200 kHz. The maximum divide ratio is 512. Please refer to Section 29.4.1.1, “Writing the FCLKDIV Register” for more information.

29.3.2.2 Flash Security Register (FSEC)

The FSEC register holds all bits associated with the security of the MCU and Flash module.

	7	6	5	4	3	2	1	0
R	KEYEN		RNV5	RNV4	RNV3	RNV2	SEC	
W								
Reset	F	F	F	F	F	F	F	F

= Unimplemented or Reserved

Figure 29-5. Flash Security Register (FSEC)

All bits in the FSEC register are readable but are not writable.

The FSEC register is loaded from the Flash Configuration Field at address 0x7F_FF0F during the reset sequence, indicated by F in Figure 29-5.

Table 29-3. FSEC Field Descriptions

Field	Description
7:6 KEYEN[1:0]	**Backdoor Key Security Enable Bits** — The KEYEN[1:0] bits define the enabling of backdoor key access to the Flash module as shown in Table 29-4.
5:2 RNV[5:2]	**Reserved Nonvolatile Bits** — The RNV[5:2] bits should remain in the erased state for future enhancements.
1:0 SEC[1:0]	**Flash Security Bits** — The SEC[1:0] bits define the security state of the MCU as shown in Table 29-5. If the Flash module is unsecured using backdoor key access, the SEC[1:0] bits are forced to 1:0.

Table 29-4. Flash KEYEN States

KEYEN[1:0]	Status of Backdoor Key Access
00	DISABLED
01[1]	DISABLED
10	ENABLED
11	DISABLED

1 Preferred KEYEN state to disable Backdoor Key Access.

Table 29-5. Flash Security States

SEC[1:0]	Status of Security
00	SECURED
01[1]	SECURED
10	UNSECURED
11	SECURED

1 Preferred SEC state to set MCU to secured state.

The security function in the Flash module is described in Section 29.6, “Flash Module Security”.

29.3.2.3 Flash Test Mode Register (FTSTMOD)

The FTSTMOD register is used to control Flash test features.

	7	6	5	4	3	2	1	0
R	0	MRDS		0	0	0	0	0
W								
Reset	0	0	0	0	0	0	0	0

= Unimplemented or Reserved

Figure 29-6. Flash Test Mode Register (FTSTMOD)

MRDS bits are readable and writable while all remaining bits read 0 and are not writable in normal mode.

Table 29-6. FTSTMOD Field Descriptions

Field	Description
6:5 MRDS[1:0]	**Margin Read Setting** — The MRDS[1:0] bits are used to set the sense-amp margin level for reads of the Flash array as shown in Table 29-7.

Table 29-7. FTSTMOD Margin Read Settings

MRDS[1:0]	Margin Read Setting
00	Normal
01	Program Margin[1]
10	Erase Margin[2]
11	Normal

1 Flash array reads will be sensitive to program margin.
2 Flash array reads will be sensitive to erase margin.

29.3.2.4 Flash Configuration Register (FCNFG)

The FCNFG register enables the Flash interrupts and gates the security backdoor writes.

	7	6	5	4	3	2	1	0
R	CBEIE	CCIE	KEYACC	0	0	0	0	0
W								
Reset	0	0	0	0	0	0	0	0

= Unimplemented or Reserved

Figure 29-7. Flash Configuration Register (FCNFG)

CBEIE, CCIE and KEYACC bits are readable and writable while all remaining bits read 0 and are not writable in normal mode. KEYACC is only writable if KEYEN (see Section 29.3.2.2, “Flash Security Register (FSEC)” is set to the enabled state.

Table 29-8. FCNFG Field Descriptions

Field	Description
7 CBEIE	**Command Buffer Empty Interrupt Enable** — The CBEIE bit enables an interrupt in case of an empty command buffer in the Flash module. 0 Command buffer empty interrupt disabled. 1 An interrupt will be requested whenever the CBEIF flag (see Section 29.3.2.6, “Flash Status Register (FSTAT)”) is set.
6 CCIE	**Command Complete Interrupt Enable** — The CCIE bit enables an interrupt in case all commands have been completed in the Flash module. 0 Command complete interrupt disabled. 1 An interrupt will be requested whenever the CCIF flag (see Section 29.3.2.6, “Flash Status Register (FSTAT)”) is set.
5 KEYACC	**Enable Security Key Writing** 0 Flash writes are interpreted as the start of a command write sequence. 1 Writes to Flash array are interpreted as keys to open the backdoor. Reads of the Flash array return invalid data.

29.3.2.5 Flash Protection Register (FPROT)

The FPROT register defines which Flash sectors are protected against program or erase operations.

	7	6	5	4	3	2	1	0
R	FPOPEN	RNV6	FPHDIS	FPHS		FPLDIS	FPLS	
W								
Reset	F	F	F	F	F	F	F	F

= Unimplemented or Reserved

Figure 29-8. Flash Protection Register (FPROT)

All bits in the FPROT register are readable and writable with restrictions (see Section 29.3.2.5.1, “Flash Protection Restrictions”) except for RNV[6] which is only readable.

During the reset sequence, the FPROT register is loaded from the Flash Configuration Field at global address 0x7F_FF0D. To change the Flash protection that will be loaded during the reset sequence, the upper sector of the Flash memory must be unprotected, then the Flash Protect/Security byte located as described in Table 29-1 must be reprogrammed.

Trying to alter data in any protected area in the Flash memory will result in a protection violation error and the PVIOL flag will be set in the FSTAT register. The mass erase of a Flash block is not possible if any of the Flash sectors contained in the Flash block are protected.

Table 29-9. FPROT Field Descriptions

Field	Description
7 FPOPEN	**Flash Protection Open** — The FPOPEN bit determines the protection function for program or erase as shown in Table 29-10. 0 The FPHDIS and FPLDIS bits define unprotected address ranges as specified by the corresponding FPHS[1:0] and FPLS[1:0] bits. For an MCU without an EEPROM module, the FPOPEN clear state allows the main part of the Flash block to be protected while a small address range can remain unprotected for EEPROM emulation. 1 The FPHDIS and FPLDIS bits enable protection for the address range specified by the corresponding FPHS[1:0] and FPLS[1:0] bits.
6 RNV6	**Reserved Nonvolatile Bit** — The RNV[6] bit should remain in the erased state for future enhancements.
5 FPHDIS	**Flash Protection Higher Address Range Disable** — The FPHDIS bit determines whether there is a protected/unprotected area in a specific region of the Flash memory ending with global address 0x7F_FFFF. 0 Protection/Unprotection enabled. 1 Protection/Unprotection disabled.
4:3 FPHS[1:0]	**Flash Protection Higher Address Size** — The FPHS[1:0] bits determine the size of the protected/unprotected area as shown inTable 29-11. The FPHS[1:0] bits can only be written to while the FPHDIS bit is set.
2 FPLDIS	**Flash Protection Lower Address Range Disable** — The FPLDIS bit determines whether there is a protected/unprotected area in a specific region of the Flash memory beginning with global address 0x7F_8000. 0 Protection/Unprotection enabled. 1 Protection/Unprotection disabled.
1:0 FPLS[1:0]	**Flash Protection Lower Address Size** — The FPLS[1:0] bits determine the size of the protected/unprotected area as shown in Table 29-12. The FPLS[1:0] bits can only be written to while the FPLDIS bit is set.

Table 29-10. Flash Protection Function

FPOPEN	FPHDIS	FPLDIS	Function[1]
1	1	1	No Protection
1	1	0	Protected Low Range
1	0	1	Protected High Range
1	0	0	Protected High and Low Ranges
0	1	1	Full Flash memory Protected
0	1	0	Unprotected Low Range
0	0	1	Unprotected High Range
0	0	0	Unprotected High and Low Ranges

1 For range sizes, refer to Table 29-11 and Table 29-12.

Table 29-11. Flash Protection Higher Address Range

FPHS[1:0]	Global Address Range	Protected Size
00	0x7F_F800–0x7F_FFFF	2 Kbytes
01	0x7F_F000–0x7F_FFFF	4 Kbytes
10	0x7F_E000–0x7F_FFFF	8 Kbytes
11	0x7F_C000–0x7F_FFFF	16 Kbytes

Table 29-12. Flash Protection Lower Address Range

FPLS[1:0]	Global Address Range	Protected Size
00	0x7F_8000–0x7F_83FF	1 Kbytes
01	0x7F_8000–0x7F_87FF	2 Kbytes
10	0x7F_8000–0x7F_8FFF	4 Kbytes
11	0x7F_8000–0x7F_9FFF	8 Kbytes

All possible Flash protection scenarios are shown in Figure 29-9. Although the protection scheme is loaded from the Flash array at global address 0x7F_FF0D during the reset sequence, it can be changed by the user. This protection scheme can be used by applications requiring re-programming in single chip mode while providing as much protection as possible if re-programming is not required.

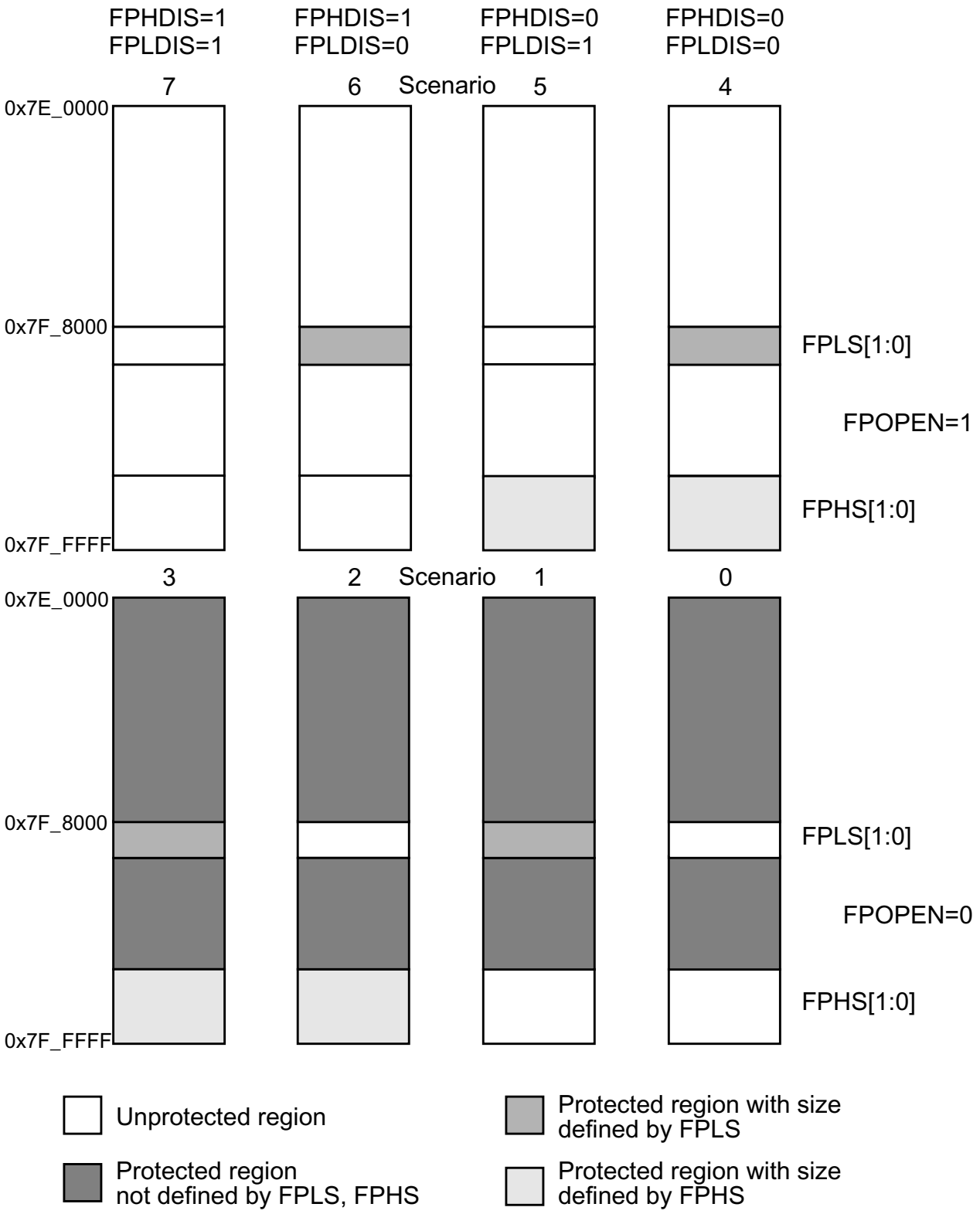

Figure 29-9. Flash Protection Scenarios

29.3.2.5.1 Flash Protection Restrictions

The general guideline is that Flash protection can only be added and not removed. Table 29-13 specifies all valid transitions between Flash protection scenarios. Any attempt to write an invalid scenario to the FPROT register will be ignored and the FPROT register will remain unchanged. The contents of the FPROT register reflect the active protection scenario. See the FPHS and FPLS descriptions for additional restrictions.

Table 29-13. Flash Protection Scenario Transitions

From Protection Scenario	To Protection Scenario[1]							
	0	1	2	3	4	5	6	7
0	X	X	X	X				
1		X		X				
2			X	X				
3				X				
4				X	X			
5			X	X	X	X		
6		X		X	X		X	
7	X	X	X	X	X	X	X	X

1 Allowed transitions marked with X.

29.3.2.6 Flash Status Register (FSTAT)

The FSTAT register defines the operational status of the module.

	7	6	5	4	3	2	1	0
R	CBEIF	CCIF	PVIOL	ACCERR	0	BLANK	0	0
W								
Reset	1	1	0	0	0	0	0	0

= Unimplemented or Reserved

Figure 29-10. Flash Status Register (FSTAT — Normal Mode)

	7	6	5	4	3	2	1	0
R	CBEIF	CCIF	PVIOL	ACCERR	0	BLANK	FAIL	0
W								
Reset	1	1	0	0	0	0	0	0

= Unimplemented or Reserved

Figure 29-11. Flash Status Register (FSTAT — Special Mode)

CBEIF, PVIOL, and ACCERR are readable and writable, CCIF and BLANK are readable and not writable, remaining bits read 0 and are not writable in normal mode. FAIL is readable and writable in special mode. FAIL must be clear in special mode when starting a command write sequence.

Table 29-14. FSTAT Field Descriptions

Field	Description
7 CBEIF	**Command Buffer Empty Interrupt Flag** — The CBEIF flag indicates that the address, data and command buffers are empty so that a new command write sequence can be started. Writing a 0 to the CBEIF flag has no effect on CBEIF. Writing a 0 to CBEIF after writing an aligned word to the Flash address space, but before CBEIF is cleared, will abort a command write sequence and cause the ACCERR flag to be set. Writing a 0 to CBEIF outside of a command write sequence will not set the ACCERR flag. The CBEIF flag is cleared by writing a 1 to CBEIF. The CBEIF flag is used together with the CBEIE bit in the FCNFG register to generate an interrupt request (see Figure 29-30). 0 Command buffers are full. 1 Command buffers are ready to accept a new command.
6 CCIF	**Command Complete Interrupt Flag** — The CCIF flag indicates that there are no more commands pending. The CCIF flag is cleared when CBEIF is cleared and sets automatically upon completion of all active and pending commands. The CCIF flag does not set when an active commands completes and a pending command is fetched from the command buffer. Writing to the CCIF flag has no effect on CCIF. The CCIF flag is used together with the CCIE bit in the FCNFG register to generate an interrupt request (see Figure 29-30). 0 Command in progress. 1 All commands are completed.
5 PVIOL	**Protection Violation Flag** —The PVIOL flag indicates an attempt was made to program or erase an address in a protected area of the Flash memory during a command write sequence. Writing a 0 to the PVIOL flag has no effect on PVIOL. The PVIOL flag is cleared by writing a 1 to PVIOL. While PVIOL is set, it is not possible to launch a command or start a command write sequence. 0 No protection violation detected. 1 Protection violation has occurred.
4 ACCERR	**Access Error Flag** — The ACCERR flag indicates an illegal access has occurred to the Flash memory caused by either a violation of the command write sequence (see Section 29.4.1.2, “Command Write Sequence”), issuing an illegal Flash command (see Table 29-16), launching the sector erase abort command terminating a sector erase operation early (see Section 29.4.2.6, “Sector Erase Abort Command”) or the execution of a CPU STOP instruction while a command is executing (CCIF = 0). Writing a 0 to the ACCERR flag has no effect on ACCERR. The ACCERR flag is cleared by writing a 1 to ACCERR.While ACCERR is set, it is not possible to launch a command or start a command write sequence. If ACCERR is set by an erase verify operation or a data compress operation, any buffered command will not launch. 0 No access error detected. 1 Access error has occurred.
2 BLANK	**Flag Indicating the Erase Verify Operation Status** — When the CCIF flag is set after completion of an erase verify command, the BLANK flag indicates the result of the erase verify operation. The BLANK flag is cleared by the Flash module when CBEIF is cleared as part of a new valid command write sequence. Writing to the BLANK flag has no effect on BLANK. 0 Flash block verified as not erased. 1 Flash block verified as erased.
1 FAIL	**Flag Indicating a Failed Flash Operation** — The FAIL flag will set if the erase verify operation fails (Flash block verified as not erased). Writing a 0 to the FAIL flag has no effect on FAIL. The FAIL flag is cleared by writing a 1 to FAIL. 0 Flash operation completed without error. 1 Flash operation failed.

29.3.2.7 Flash Command Register (FCMD)

The FCMD register is the Flash command register.

	7	6	5	4	3	2	1	0
R	0	CMDB						
W								
Reset	1	1	0	0	0	0	0	0

= Unimplemented or Reserved

Figure 29-12. Flash Command Register (FCMD)

All CMDB bits are readable and writable during a command write sequence while bit 7 reads 0 and is not writable.

Table 29-15. FCMD Field Descriptions

Field	Description
6:0 CMDB[6:0]	**Flash Command** — Valid Flash commands are shown in Table 29-16. Writing any command other than those listed in Table 29-16 sets the ACCERR flag in the FSTAT register.

Table 29-16. Valid Flash Command List

CMDB[6:0]	NVM Command
0x05	Erase Verify
0x06	Data Compress
0x20	Word Program
0x40	Sector Erase
0x41	Mass Erase
0x47	Sector Erase Abort

29.3.2.8 Flash Control Register (FCTL)

The FCTL register is the Flash control register.

	7	6	5	4	3	2	1	0
R	0	NV6	NV5	NV4	NV3	NV2	NV1	NV0
W								
Reset	0	F	F	F	F	F	F	F

= Unimplemented or Reserved

Figure 29-13. Flash Control Register (FCTL)

All bits in the FCTL register are readable but are not writable.

The FCTL NV bits are loaded from the Flash nonvolatile byte located at global address 0x7F_FF0E during the reset sequence, indicated by F in Figure 29-13.

Table 29-17. FCTL Field Descriptions

Field	Description
6:0 NV[6:0]	**Nonvolatile Bits** — The NV[6:0] bits are available as nonvolatile bits. Refer to the Device User Guide for proper use of the NV bits.

29.3.2.9 Flash Address Registers (FADDR)

The FADDRHI and FADDRLO registers are the Flash address registers.

	7	6	5	4	3	2	1	0
R	FADDRHI							
W								
Reset	0	0	0	0	0	0	0	0

= Unimplemented or Reserved

Figure 29-14. Flash Address High Register (FADDRHI)

	7	6	5	4	3	2	1	0
R	FADDRLO							
W								
Reset	0	0	0	0	0	0	0	0

= Unimplemented or Reserved

Figure 29-15. Flash Address Low Register (FADDRLO)

All FADDRHI and FADDRLO bits are readable but are not writable. After an array write as part of a command write sequence, the FADDR registers will contain the mapped MCU address written.

29.3.2.10 Flash Data Registers (FDATA)

The FDATAHI and FDATALO registers are the Flash data registers.

	7	6	5	4	3	2	1	0
R	FDATAHI							
W								
Reset	0	0	0	0	0	0	0	0

= Unimplemented or Reserved

Figure 29-16. Flash Data High Register (FDATAHI)

	7	6	5	4	3	2	1	0
R	FDATALO							
W								
Reset	0	0	0	0	0	0	0	0

= Unimplemented or Reserved

Figure 29-17. Flash Data Low Register (FDATALO)

All FDATAHI and FDATALO bits are readable but are not writable. At the completion of a data compress operation, the resulting 16-bit signature is stored in the FDATA registers. The data compression signature is readable in the FDATA registers until a new command write sequence is started.

29.3.2.11 RESERVED1

This register is reserved for factory testing and is not accessible.

	7	6	5	4	3	2	1	0
R	0	0	0	0	0	0	0	0
W								
Reset	0	0	0	0	0	0	0	0

= Unimplemented or Reserved

Figure 29-18. RESERVED1

All bits read 0 and are not writable.

29.3.2.12 RESERVED2

This register is reserved for factory testing and is not accessible.

	7	6	5	4	3	2	1	0
R	0	0	0	0	0	0	0	0
W								
Reset	0	0	0	0	0	0	0	0

= Unimplemented or Reserved

Figure 29-19. RESERVED2

All bits read 0 and are not writable.

29.3.2.13 RESERVED3

This register is reserved for factory testing and is not accessible.

	7	6	5	4	3	2	1	0
R	0	0	0	0	0	0	0	0
W								
Reset	0	0	0	0	0	0	0	0

= Unimplemented or Reserved

Figure 29-20. RESERVED3

All bits read 0 and are not writable.

29.3.2.14 RESERVED4

This register is reserved for factory testing and is not accessible.

	7	6	5	4	3	2	1	0
R	0	0	0	0	0	0	0	0
W								
Reset	0	0	0	0	0	0	0	0

= Unimplemented or Reserved

Figure 29-21. RESERVED4

All bits read 0 and are not writable.

29.4 Functional Description

29.4.1 Flash Command Operations

Write operations are used to execute program, erase, erase verify, erase abort, and data compress algorithms described in this section. The program and erase algorithms are controlled by a state machine whose timebase, FCLK, is derived from the oscillator clock via a programmable divider. The command register, as well as the associated address and data registers, operate as a buffer and a register (2-stage FIFO) so that a second command along with the necessary data and address can be stored to the buffer while the first command is still in progress. This pipelined operation allows a time optimization when programming more than one word on a specific row in the Flash block as the high voltage generation can be kept active in between two programming commands. The pipelined operation also allows a simplification of command launching. Buffer empty as well as command completion are signalled by flags in the Flash status register with corresponding interrupts generated, if enabled.

The next sections describe:

1. How to write the FCLKDIV register
2. Command write sequences to program, erase, erase verify, erase abort, and data compress operations on the Flash memory
3. Valid Flash commands
4. Effects resulting from illegal Flash command write sequences or aborting Flash operations

29.4.1.1 Writing the FCLKDIV Register

Prior to issuing any Flash command after a reset, the user is required to write the FCLKDIV register to divide the oscillator clock down to within the 150 kHz to 200 kHz range. Since the program and erase timings are also a function of the bus clock, the FCLKDIV determination must take this information into account.

If we define:

- FCLK as the clock of the Flash timing control block
- Tbus as the period of the bus clock
- INT(x) as taking the integer part of x (e.g. INT(4.323) = 4)

then FCLKDIV register bits PRDIV8 and FDIV[5:0] are to be set as described in Figure 29-22.

For example, if the oscillator clock frequency is 950kHz and the bus clock frequency is 10MHz, FCLKDIV bits FDIV[5:0] should be set to 0x04 (000100) and bit PRDIV8 set to 0. The resulting FCLK frequency is then 190kHz. As a result, the Flash program and erase algorithm timings are increased over the optimum target by:

$$(200 - 190)/200 \times 100 = 5\%$$

If the oscillator clock frequency is 16MHz and the bus clock frequency is 40MHz, FCLKDIV bits FDIV[5:0] should be set to 0x0A (001010) and bit PRDIV8 set to 1. The resulting FCLK frequency is then 182kHz. In this case, the Flash program and erase algorithm timings are increased over the optimum target by:

$$(200 - 182)/200 \times 100 = 9\%$$

CAUTION

Program and erase command execution time will increase proportionally with the period of FCLK. Because of the impact of clock synchronization on the accuracy of the functional timings, programming or erasing the Flash memory cannot be performed if the bus clock runs at less than 1 MHz. Programming or erasing the Flash memory with FCLK < 150 kHz should be avoided. Setting FCLKDIV to a value such that FCLK < 150 kHz can destroy the Flash memory due to overstress. Setting FCLKDIV to a value such that (1/FCLK+Tbus) < 5µs can result in incomplete programming or erasure of the Flash memory cells.

If the FCLKDIV register is written, the FDIVLD bit is set automatically. If the FDIVLD bit is 0, the FCLKDIV register has not been written since the last reset. If the FCLKDIV register has not been written to, the Flash command loaded during a command write sequence will not execute and the ACCERR flag in the FSTAT register will set.

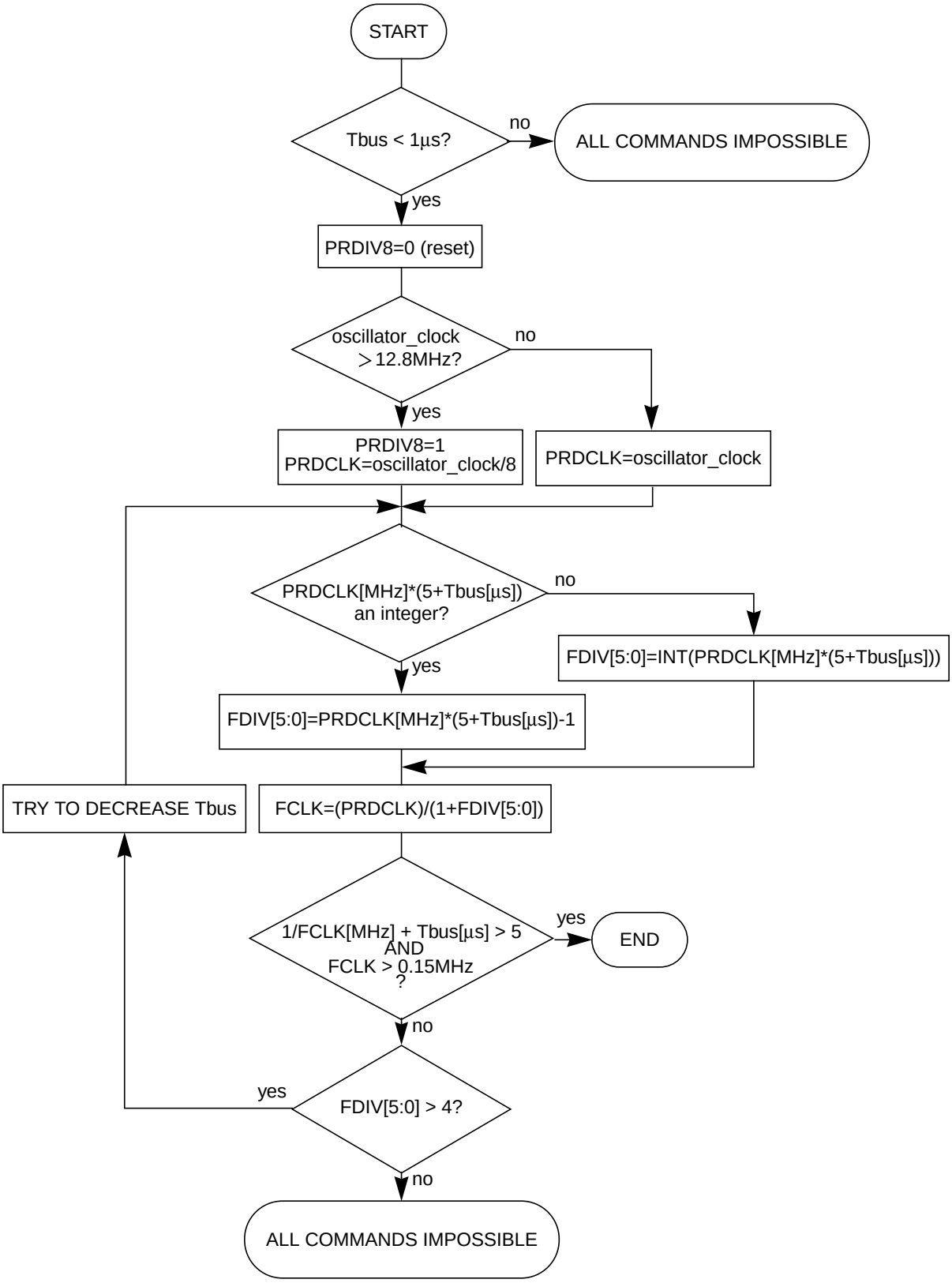

Figure 29-22. Determination Procedure for PRDIV8 and FDIV Bits

29.4.1.2 Command Write Sequence

The Flash command controller is used to supervise the command write sequence to execute program, erase, erase verify, erase abort, and data compress algorithms.

Before starting a command write sequence, the ACCERR and PVIOL flags in the FSTAT register must be clear (see Section 29.3.2.6, "Flash Status Register (FSTAT)") and the CBEIF flag should be tested to determine the state of the address, data and command buffers. If the CBEIF flag is set, indicating the buffers are empty, a new command write sequence can be started. If the CBEIF flag is clear, indicating the buffers are not available, a new command write sequence will overwrite the contents of the address, data and command buffers.

A command write sequence consists of three steps which must be strictly adhered to with writes to the Flash module not permitted between the steps. However, Flash register and array reads are allowed during a command write sequence. The basic command write sequence is as follows:

1. Write to a valid address in the Flash memory.
2. Write a valid command to the FCMD register.
3. Clear the CBEIF flag in the FSTAT register by writing a 1 to CBEIF to launch the command.

The address written in step 1 will be stored in the FADDR registers and the data will be stored in the FDATA registers. If the CBEIF flag in the FSTAT register is clear when the first Flash array write occurs, the contents of the address and data buffers will be overwritten and the CBEIF flag will be set. When the CBEIF flag is cleared, the CCIF flag is cleared on the same bus cycle by the Flash command controller indicating that the command was successfully launched. For all command write sequences except data compress and sector erase abort, the CBEIF flag will set four bus cycles after the CCIF flag is cleared indicating that the address, data, and command buffers are ready for a new command write sequence to begin. For data compress and sector erase abort operations, the CBEIF flag will remain clear until the operation completes. Except for the sector erase abort command, a buffered command will wait for the active operation to be completed before being launched. The sector erase abort command is launched when the CBEIF flag is cleared as part of a sector erase abort command write sequence. Once a command is launched, the completion of the command operation is indicated by the setting of the CCIF flag in the FSTAT register. The CCIF flag will set upon completion of all active and buffered commands.

29.4.2 Flash Commands

Table 29-18 summarizes the valid Flash commands along with the effects of the commands on the Flash block.

Table 29-18. Flash Command Description

FCMDB	NVM Command	Function on Flash Memory
0x05	Erase Verify	Verify all memory bytes in the Flash block are erased. If the Flash block is erased, the BLANK flag in the FSTAT register will set upon command completion.
0x06	Data Compress	Compress data from a selected portion of the Flash block. The resulting signature is stored in the FDATA register.
0x20	Program	Program a word (two bytes) in the Flash block.

Table 29-18. Flash Command Description

FCMDB	NVM Command	Function on Flash Memory
0x40	Sector Erase	Erase all memory bytes in a sector of the Flash block.
0x41	Mass Erase	Erase all memory bytes in the Flash block. A mass erase of the full Flash block is only possible when FPLDIS, FPHDIS and FPOPEN bits in the FPROT register are set prior to launching the command.
0x47	Sector Erase Abort	Abort the sector erase operation. The sector erase operation will terminate according to a set procedure. The Flash sector should not be considered erased if the ACCERR flag is set upon command completion.

CAUTION

A Flash word must be in the erased state before being programmed. Cumulative programming of bits within a Flash word is not allowed.

29.4.2.1 Erase Verify Command

The erase verify operation will verify that a Flash block is erased.

An example flow to execute the erase verify operation is shown in Figure 29-23. The erase verify command write sequence is as follows:

1. Write to a Flash block address to start the command write sequence for the erase verify command. The address and data written will be ignored.
2. Write the erase verify command, 0x05, to the FCMD register.
3. Clear the CBEIF flag in the FSTAT register by writing a 1 to CBEIF to launch the erase verify command.

After launching the erase verify command, the CCIF flag in the FSTAT register will set after the operation has completed unless a new command write sequence has been buffered. The number of bus cycles required to execute the erase verify operation is equal to the number of addresses in a Flash block plus 14 bus cycles as measured from the time the CBEIF flag is cleared until the CCIF flag is set. Upon completion of the erase verify operation, the BLANK flag in the FSTAT register will be set if all addresses in the selected Flash block are verified to be erased. If any address in a selected Flash block is not erased, the erase verify operation will terminate and the BLANK flag in the FSTAT register will remain clear. The MRDS bits in the FTSTMOD register will determine the sense-amp margin setting during the erase verify operation.

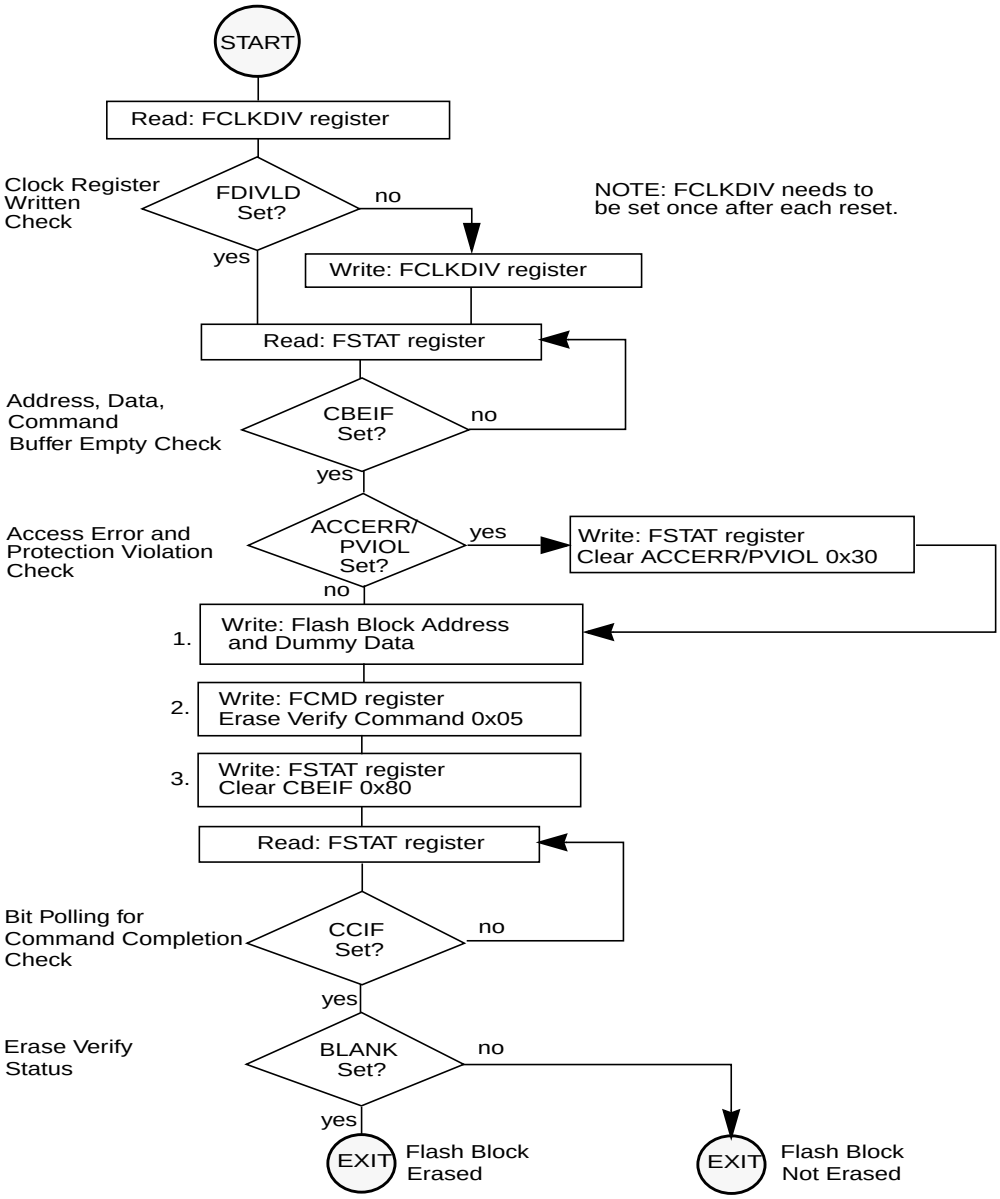

Figure 29-23. Example Erase Verify Command Flow

29.4.2.2 Data Compress Command

The data compress operation will check Flash code integrity by compressing data from a selected portion of the Flash memory into a signature analyzer.

An example flow to execute the data compress operation is shown in Figure 29-24. The data compress command write sequence is as follows:

1. Write to a Flash block address to start the command write sequence for the data compress command. The address written determines the starting address for the data compress operation and the data written determines the number of consecutive words to compress. If the data value written is 0x0000, 64K addresses or 128 Kbytes will be compressed.
2. Write the data compress command, 0x06, to the FCMD register.
3. Clear the CBEIF flag in the FSTAT register by writing a 1 to CBEIF to launch the data compress command.

After launching the data compress command, the CCIF flag in the FSTAT register will set after the data compress operation has completed. The number of bus cycles required to execute the data compress operation is equal to two times the number of consecutive words to compress plus 18 bus cycles as measured from the time the CBEIF flag is cleared until the CCIF flag is set. Once the CCIF flag is set, the signature generated by the data compress operation is available in the FDATA registers. The signature in the FDATA registers can be compared to the expected signature to determine the integrity of the selected data stored in the selected Flash memory. If the last address of a Flash block is reached during the data compress operation, data compression will continue with the starting address of the Flash block. The MRDS bits in the FTSTMOD register will determine the sense-amp margin setting during the data compress operation.

NOTE

Since the FDATA registers (or data buffer) are written to as part of the data compress operation, a command write sequence is not allowed to be buffered behind a data compress command write sequence. The CBEIF flag will not set after launching the data compress command to indicate that a command should not be buffered behind it. If an attempt is made to start a new command write sequence with a data compress operation active, the ACCERR flag in the FSTAT register will be set. A new command write sequence should only be started after reading the signature stored in the FDATA registers.

In order to take corrective action, it is recommended that the data compress command be executed on a Flash sector or subset of a Flash sector. If the data compress operation on a Flash sector returns an invalid signature, the Flash sector should be erased using the sector erase command and then reprogrammed using the program command.

The data compress command can be used to verify that a sector or sequential set of sectors are erased.

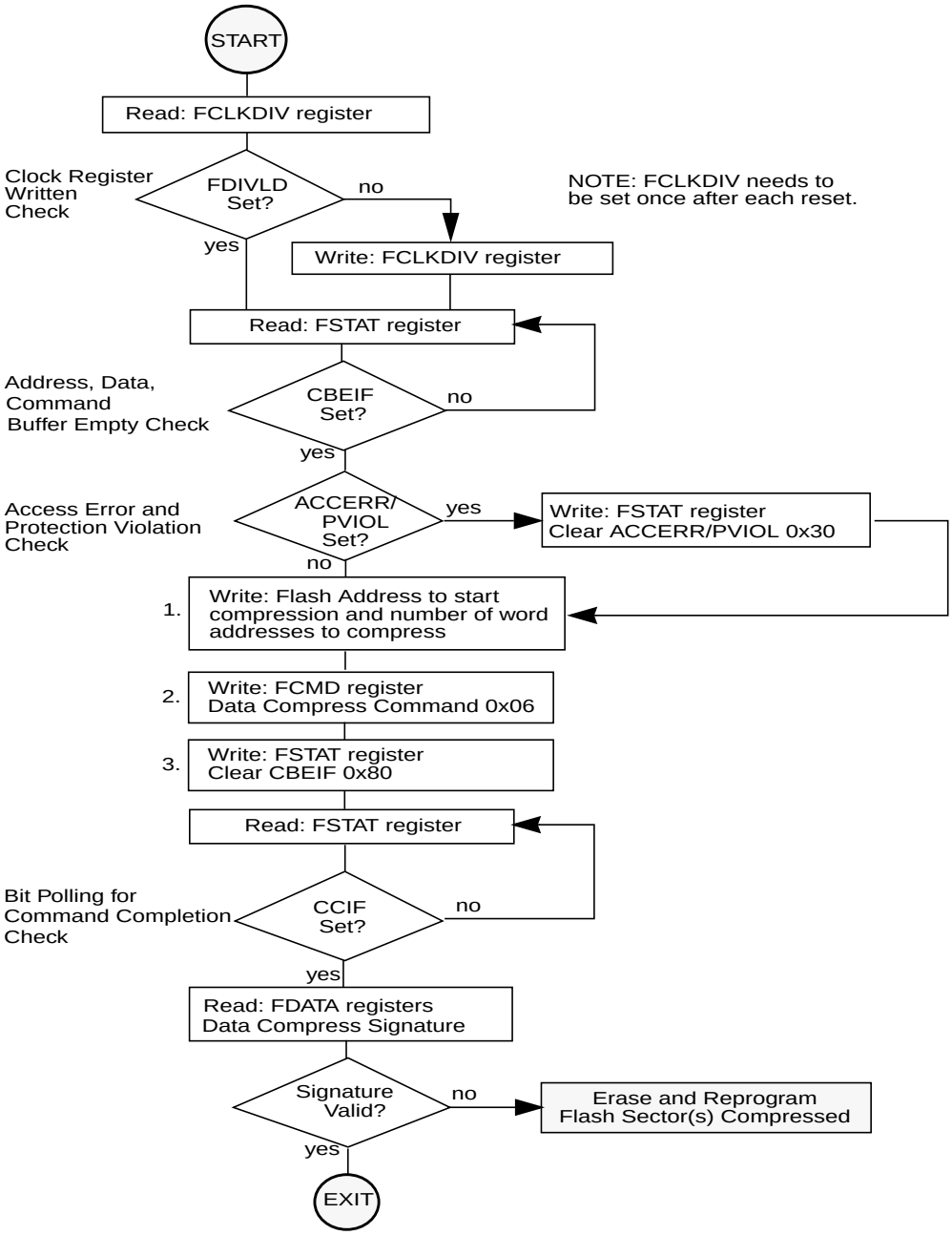

Figure 29-24. Example Data Compress Command Flow

29.4.2.2.1 Data Compress Operation

The Flash module contains a 16-bit multiple-input signature register (MISR) to generate a 16-bit signature based on selected Flash array data. The final 16-bit signature, found in the FDATA registers after the data compress operation has completed, is based on the following logic equation which is executed on every data compression cycle during the operation:

MISR[15:0] = {MISR[14:0], ^MISR[15,4,2,1]} ^ DATA[15:0] ***Eqn. 29-1***

where MISR is the content of the internal signature register and DATA is the data to be compressed as shown in Figure 29-25.

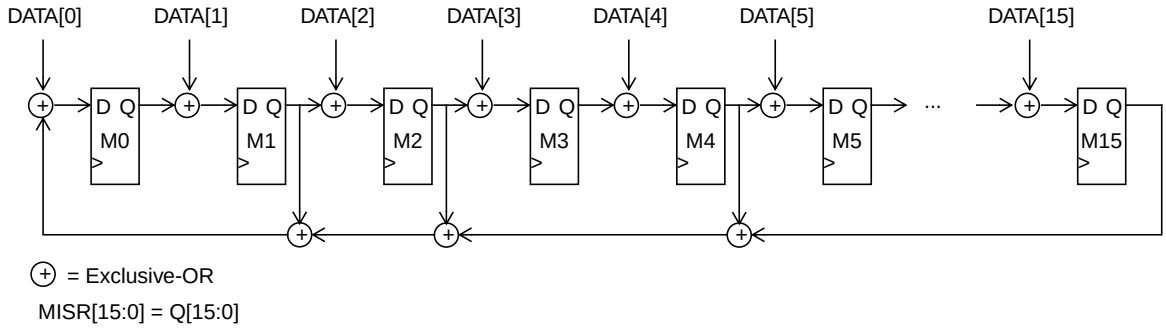

Figure 29-25. 16-Bit MISR Diagram

During the data compress operation, the following steps are executed:

1. MISR is reset to 0xFFFF.
2. Initialized DATA equal to 0xFFFF is compressed into the MISR which results in the MISR containing 0x0001.
3. DATA equal to the selected Flash array data range is read and compressed into the MISR with addresses incrementing.
4. DATA equal to the selected Flash array data range is read and compressed into the MISR with addresses decrementing.
5. DATA equal to the contents of the MISR is compressed into the same MISR.
6. The contents of the MISR are written to the FDATA registers.

29.4.2.3 Program Command

The program operation will program a previously erased word in the Flash memory using an embedded algorithm.

An example flow to execute the program operation is shown in Figure 29-26. The program command write sequence is as follows:

1. Write to a Flash block address to start the command write sequence for the program command. The data written will be programmed to the address written.
2. Write the program command, 0x20, to the FCMD register.
3. Clear the CBEIF flag in the FSTAT register by writing a 1 to CBEIF to launch the program command.

If a word to be programmed is in a protected area of the Flash block, the PVIOL flag in the FSTAT register will set and the program command will not launch. Once the program command has successfully launched, the CCIF flag in the FSTAT register will set after the program operation has completed unless a new command write sequence has been buffered. By executing a new program command write sequence on sequential words after the CBEIF flag in the FSTAT register has been set, up to 55% faster programming time per word can be effectively achieved than by waiting for the CCIF flag to set after each program operation.

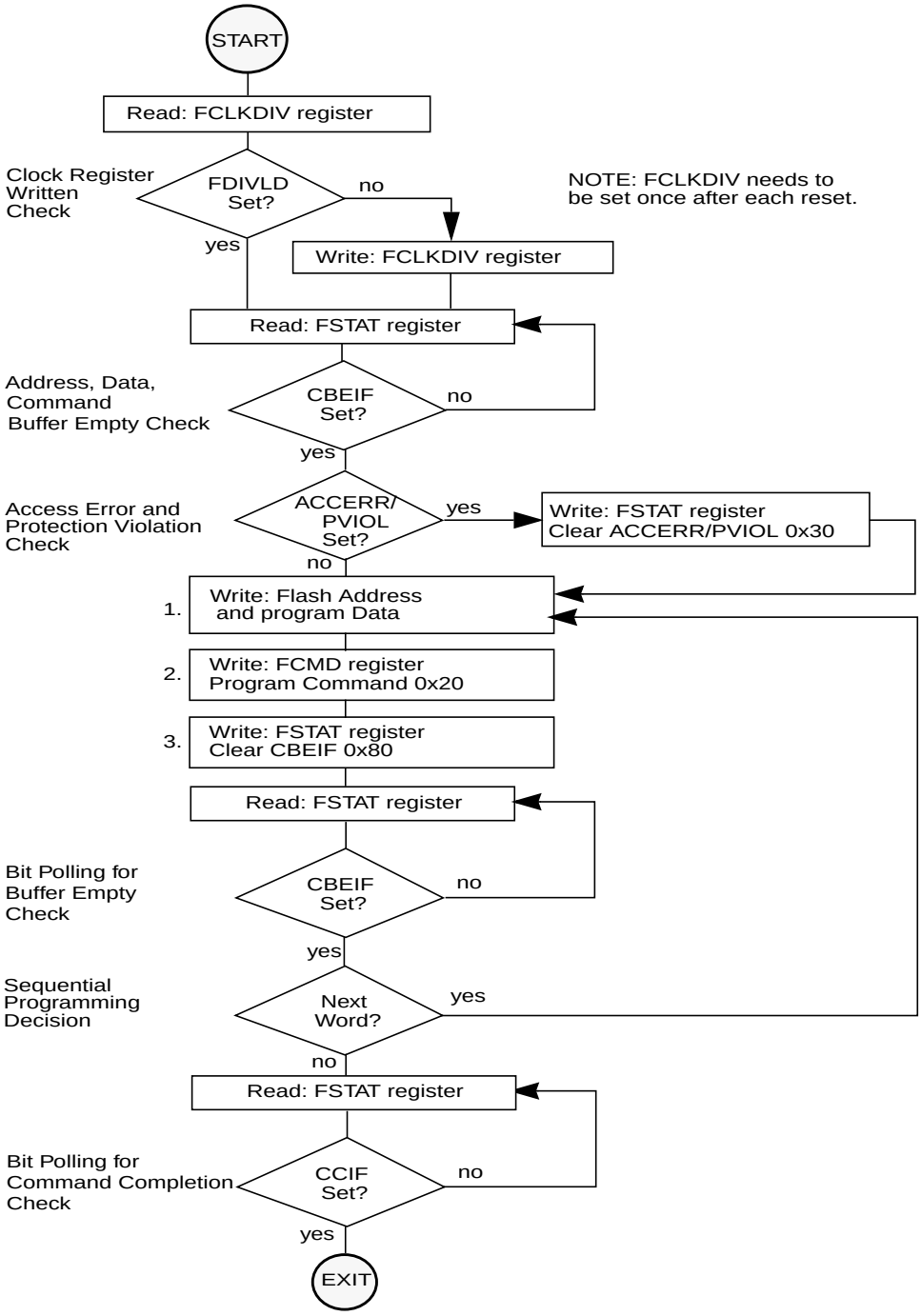

Figure 29-26. Example Program Command Flow

29.4.2.4 Sector Erase Command

The sector erase operation will erase all addresses in a 1 Kbyte sector of Flash memory using an embedded algorithm.

An example flow to execute the sector erase operation is shown in Figure 29-27. The sector erase command write sequence is as follows:

1. Write to a Flash block address to start the command write sequence for the sector erase command. The Flash address written determines the sector to be erased while global address bits [9:0] and the data written are ignored.
2. Write the sector erase command, 0x40, to the FCMD register.
3. Clear the CBEIF flag in the FSTAT register by writing a 1 to CBEIF to launch the sector erase command.

If a Flash sector to be erased is in a protected area of the Flash block, the PVIOL flag in the FSTAT register will set and the sector erase command will not launch. Once the sector erase command has successfully launched, the CCIF flag in the FSTAT register will set after the sector erase operation has completed unless a new command write sequence has been buffered.

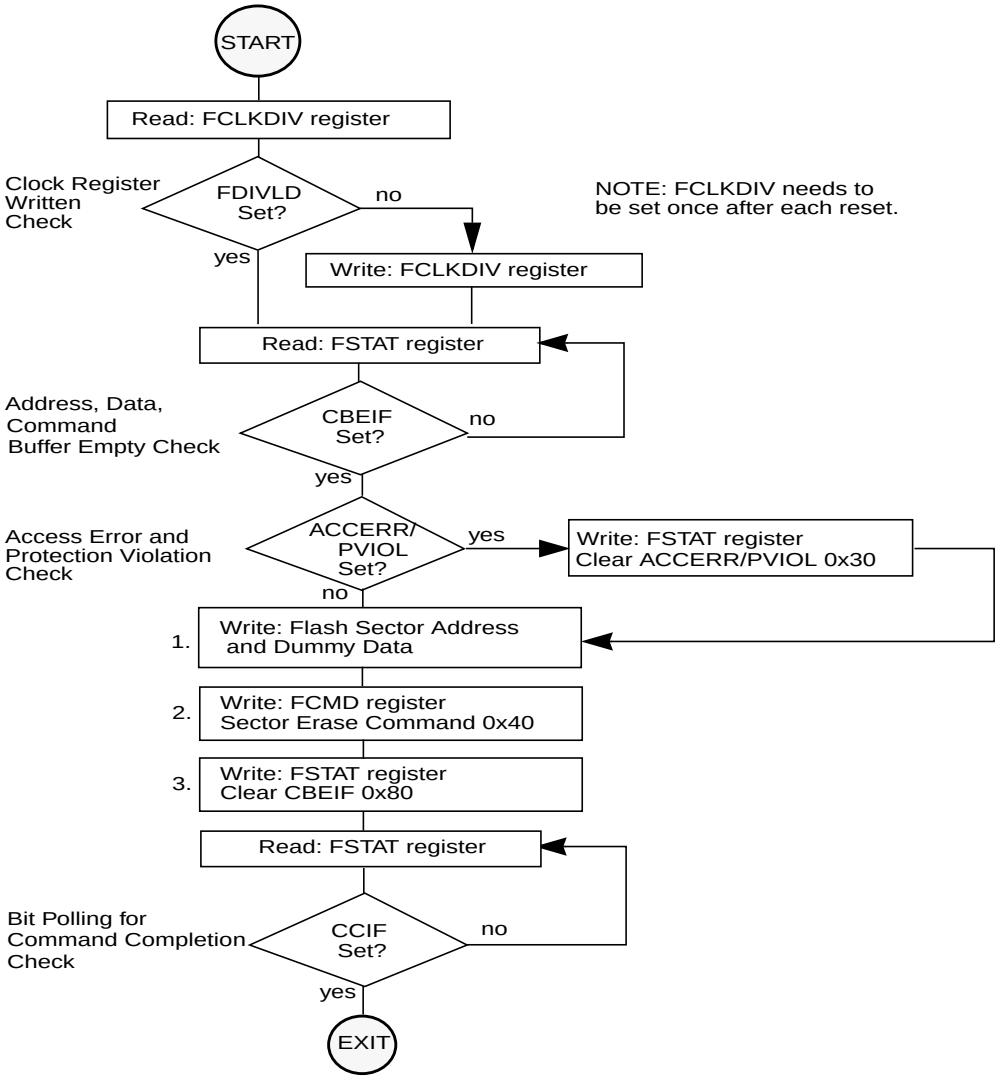

Figure 29-27. Example Sector Erase Command Flow

29.4.2.5 Mass Erase Command

The mass erase operation will erase all addresses in a Flash block using an embedded algorithm.

An example flow to execute the mass erase operation is shown in Figure 29-28. The mass erase command write sequence is as follows:

1. Write to a Flash block address to start the command write sequence for the mass erase command. The address and data written will be ignored.
2. Write the mass erase command, 0x41, to the FCMD register.
3. Clear the CBEIF flag in the FSTAT register by writing a 1 to CBEIF to launch the mass erase command.

If a Flash block to be erased contains any protected area, the PVIOL flag in the FSTAT register will set and the mass erase command will not launch. Once the mass erase command has successfully launched, the CCIF flag in the FSTAT register will set after the mass erase operation has completed unless a new command write sequence has been buffered.

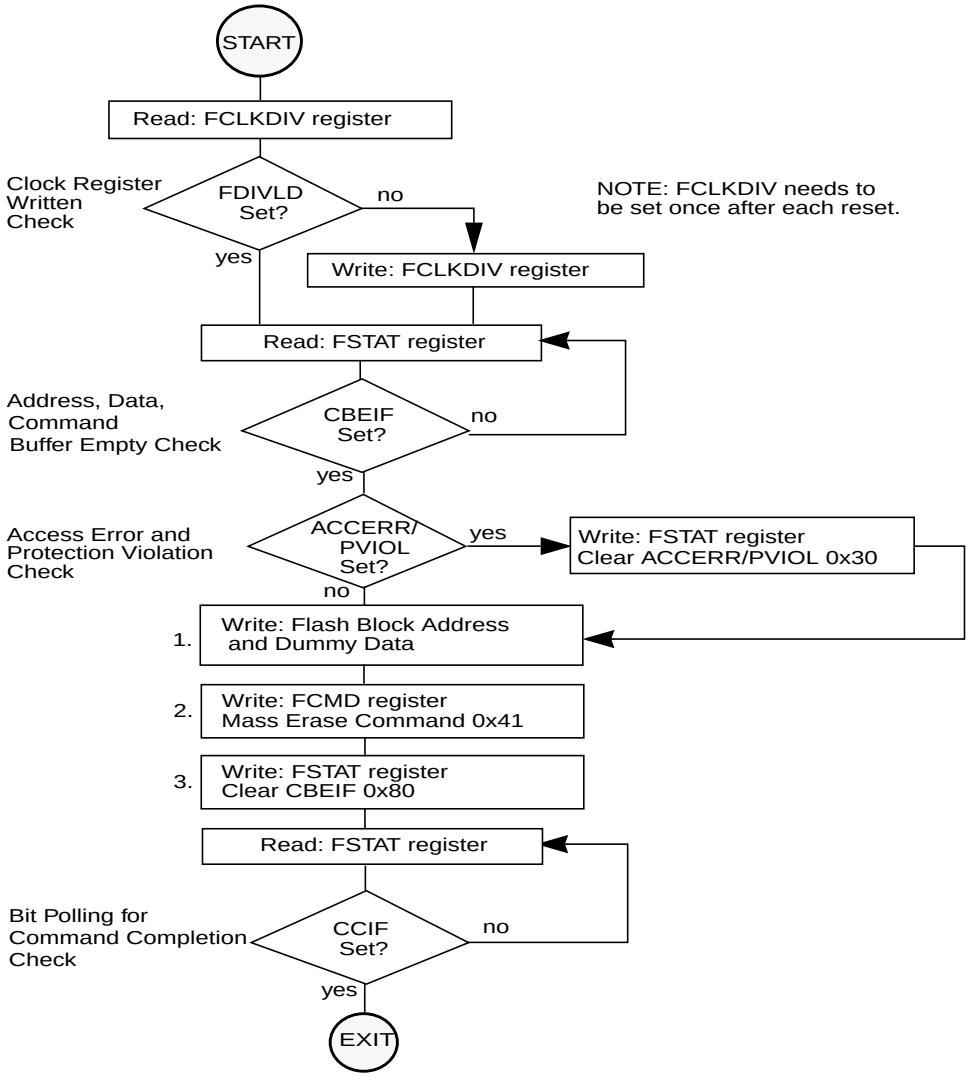

Figure 29-28. Example Mass Erase Command Flow

29.4.2.6 Sector Erase Abort Command

The sector erase abort operation will terminate the active sector erase operation so that other sectors in a Flash block are available for read and program operations without waiting for the sector erase operation to complete.

An example flow to execute the sector erase abort operation is shown in Figure 29-29. The sector erase abort command write sequence is as follows:

1. Write to any Flash block address to start the command write sequence for the sector erase abort command. The address and data written are ignored.
2. Write the sector erase abort command, 0x47, to the FCMD register.
3. Clear the CBEIF flag in the FSTAT register by writing a 1 to CBEIF to launch the sector erase abort command.

If the sector erase abort command is launched resulting in the early termination of an active sector erase operation, the ACCERR flag will set once the operation completes as indicated by the CCIF flag being set. The ACCERR flag sets to inform the user that the Flash sector may not be fully erased and a new sector erase command must be launched before programming any location in that specific sector. If the sector erase abort command is launched but the active sector erase operation completes normally, the ACCERR flag will not set upon completion of the operation as indicated by the CCIF flag being set. Therefore, if the ACCERR flag is not set after the sector erase abort command has completed, a Flash sector being erased when the abort command was launched will be fully erased. The maximum number of cycles required to abort a sector erase operation is equal to four FCLK periods (see Section 29.4.1.1, “Writing the FCLKDIV Register”) plus five bus cycles as measured from the time the CBEIF flag is cleared until the CCIF flag is set.

NOTE

Since the ACCERR bit in the FSTAT register may be set at the completion of the sector erase abort operation, a command write sequence is not allowed to be buffered behind a sector erase abort command write sequence. The CBEIF flag will not set after launching the sector erase abort command to indicate that a command should not be buffered behind it. If an attempt is made to start a new command write sequence with a sector erase abort operation active, the ACCERR flag in the FSTAT register will be set. A new command write sequence may be started after clearing the ACCERR flag, if set.

NOTE

The sector erase abort command should be used sparingly since a sector erase operation that is aborted counts as a complete program/erase cycle.

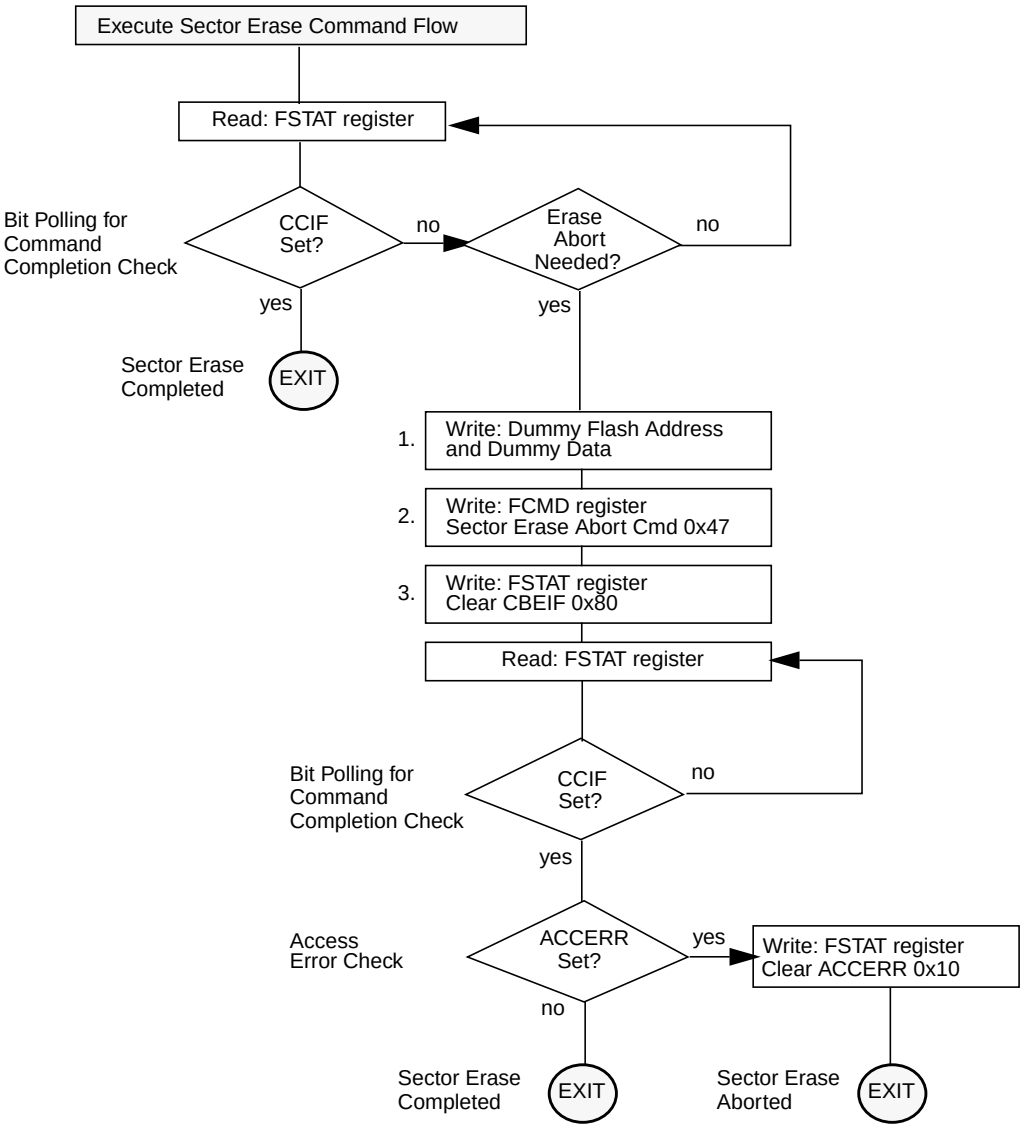

Figure 29-29. Example Sector Erase Abort Command Flow

29.4.3 Illegal Flash Operations

The ACCERR flag will be set during the command write sequence if any of the following illegal steps are performed, causing the command write sequence to immediately abort:

1. Writing to a Flash address before initializing the FCLKDIV register.
2. Writing a byte or misaligned word to a valid Flash address.
3. Starting a command write sequence while a data compress operation is active.
4. Starting a command write sequence while a sector erase abort operation is active.
5. Writing to any Flash register other than FCMD after writing to a Flash address.
6. Writing a second command to the FCMD register in the same command write sequence.
7. Writing an invalid command to the FCMD register.
8. When security is enabled, writing a command other than mass erase to the FCMD register when the write originates from a non-secure memory location or from the Background Debug Mode.
9. Writing to a Flash address after writing to the FCMD register.
10. Writing to any Flash register other than FSTAT (to clear CBEIF) after writing to the FCMD register.
11. Writing a 0 to the CBEIF flag in the FSTAT register to abort a command write sequence.

The ACCERR flag will not be set if any Flash register is read during a valid command write sequence.

The ACCERR flag will also be set if any of the following events occur:

1. Launching the sector erase abort command while a sector erase operation is active which results in the early termination of the sector erase operation (see Section 29.4.2.6, “Sector Erase Abort Command”).
2. The MCU enters stop mode and a program or erase operation is in progress. The operation is aborted immediately and any pending command is purged (see Section 29.5.2, “Stop Mode”).

If the Flash memory is read during execution of an algorithm (CCIF = 0), the read operation will return invalid data and the ACCERR flag will not be set.

If the ACCERR flag is set in the FSTAT register, the user must clear the ACCERR flag before starting another command write sequence (see Section 29.3.2.6, “Flash Status Register (FSTAT)”).

The PVIOL flag will be set after the command is written to the FCMD register during a command write sequence if any of the following illegal operations are attempted, causing the command write sequence to immediately abort:

1. Writing the program command if an address written in the command write sequence was in a protected area of the Flash memory
2. Writing the sector erase command if an address written in the command write sequence was in a protected area of the Flash memory
3. Writing the mass erase command to a Flash block while any Flash protection is enabled in the block

If the PVIOL flag is set in the FSTAT register, the user must clear the PVIOL flag before starting another command write sequence (see Section 29.3.2.6, “Flash Status Register (FSTAT)”).

29.5 Operating Modes

29.5.1 Wait Mode

If a command is active (CCIF = 0) when the MCU enters wait mode, the active command and any buffered command will be completed.

The Flash module can recover the MCU from wait mode if the CBEIF and CCIF interrupts are enabled (see Section 29.8, “Interrupts”).

29.5.2 Stop Mode

If a command is active (CCIF = 0) when the MCU enters stop mode, the operation will be aborted and, if the operation is program or erase, the Flash array data being programmed or erased may be corrupted and the CCIF and ACCERR flags will be set. If active, the high voltage circuitry to the Flash memory will immediately be switched off when entering stop mode. Upon exit from stop mode, the CBEIF flag is set and any buffered command will not be launched. The ACCERR flag must be cleared before starting a command write sequence (see Section 29.4.1.2, “Command Write Sequence”).

NOTE

As active commands are immediately aborted when the MCU enters stop mode, it is strongly recommended that the user does not use the STOP instruction during program or erase operations.

29.5.3 Background Debug Mode

In background debug mode (BDM), the FPROT register is writable. If the MCU is unsecured, then all Flash commands listed in Table 29-18 can be executed. If the MCU is secured and is in special single chip mode, only mass erase can be executed.

29.6 Flash Module Security

The Flash module provides the necessary security information to the MCU. After each reset, the Flash module determines the security state of the MCU as defined in Section 29.3.2.2, “Flash Security Register (FSEC)”.

The contents of the Flash security byte at 0x7F_FF0F in the Flash Configuration Field must be changed directly by programming 0x7F_FF0F when the MCU is unsecured and the higher address sector is unprotected. If the Flash security byte is left in a secured state, any reset will cause the MCU to initialize to a secure operating mode.

29.6.1 Unsecuring the MCU using Backdoor Key Access

The MCU may be unsecured by using the backdoor key access feature which requires knowledge of the contents of the backdoor keys (four 16-bit words programmed at addresses 0x7F_FF00–0x7F_FF07). If the KEYEN[1:0] bits are in the enabled state (see Section 29.3.2.2, “Flash Security Register (FSEC)”) and the KEYACC bit is set, a write to a backdoor key address in the Flash memory triggers a comparison

between the written data and the backdoor key data stored in the Flash memory. If all four words of data are written to the correct addresses in the correct order and the data matches the backdoor keys stored in the Flash memory, the MCU will be unsecured. The data must be written to the backdoor keys sequentially starting with 0x7F_FF00–1 and ending with 0x7F_FF06–7. 0x0000 and 0xFFFF are not permitted as backdoor keys. While the KEYACC bit is set, reads of the Flash memory will return invalid data.

The user code stored in the Flash memory must have a method of receiving the backdoor keys from an external stimulus. This external stimulus would typically be through one of the on-chip serial ports.

If the KEYEN[1:0] bits are in the enabled state (see Section 29.3.2.2, “Flash Security Register (FSEC)”), the MCU can be unsecured by the backdoor key access sequence described below:

1. Set the KEYACC bit in the Flash Configuration Register (FCNFG).
2. Write the correct four 16-bit words to Flash addresses 0xFF00–0xFF07 sequentially starting with 0x7F_FF00.
3. Clear the KEYACC bit. Depending on the user code used to write the backdoor keys, a wait cycle (NOP) may be required before clearing the KEYACC bit.
4. If all four 16-bit words match the backdoor keys stored in Flash addresses 0x7F_FF00–0x7F_FF07, the MCU is unsecured and the SEC[1:0] bits in the FSEC register are forced to the unsecure state of 1:0.

The backdoor key access sequence is monitored by an internal security state machine. An illegal operation during the backdoor key access sequence will cause the security state machine to lock, leaving the MCU in the secured state. A reset of the MCU will cause the security state machine to exit the lock state and allow a new backdoor key access sequence to be attempted. The following operations during the backdoor key access sequence will lock the security state machine:

1. If any of the four 16-bit words does not match the backdoor keys programmed in the Flash array.
2. If the four 16-bit words are written in the wrong sequence.
3. If more than four 16-bit words are written.
4. If any of the four 16-bit words written are 0x0000 or 0xFFFF.
5. If the KEYACC bit does not remain set while the four 16-bit words are written.
6. If any two of the four 16-bit words are written on successive MCU clock cycles.

After the backdoor keys have been correctly matched, the MCU will be unsecured. Once the MCU is unsecured, the Flash security byte can be programmed to the unsecure state, if desired.

In the unsecure state, the user has full control of the contents of the backdoor keys by programming addresses 0x7F_FF00–0x7F_FF07 in the Flash Configuration Field.

The security as defined in the Flash security byte (0x7F_FF0F) is not changed by using the backdoor key access sequence to unsecure. The backdoor keys stored in addresses 0x7F_FF00–0x7F_FF07 are unaffected by the backdoor key access sequence. After the next reset of the MCU, the security state of the Flash module is determined by the Flash security byte (0x7F_FF0F). The backdoor key access sequence has no effect on the program and erase protections defined in the Flash protection register.

It is not possible to unsecure the MCU in special single chip mode by using the backdoor key access sequence in background debug mode (BDM).

29.6.2 Unsecuring the MCU in Special Single Chip Mode using BDM

The MCU can be unsecured in special single chip mode by erasing the Flash module by the following method:

- Reset the MCU into special single chip mode, delay while the erase test is performed by the BDM secure ROM, send BDM commands to disable protection in the Flash module, and execute a mass erase command write sequence to erase the Flash memory.

After the CCIF flag sets to indicate that the mass operation has completed, reset the MCU into special single chip mode. The BDM secure ROM will verify that the Flash memory is erased and will assert the UNSEC bit in the BDM status register. This BDM action will cause the MCU to override the Flash security state and the MCU will be unsecured. All BDM commands will be enabled and the Flash security byte may be programmed to the unsecure state by the following method:

- Send BDM commands to execute a word program sequence to program the Flash security byte to the unsecured state and reset the MCU.

29.7 Resets

29.7.1 Flash Reset Sequence

On each reset, the Flash module executes a reset sequence to hold CPU activity while loading the following registers from the Flash memory according to Table 29-1:

- FPROT — Flash Protection Register (see Section 29.3.2.5).
- FCTL - Flash Control Register (see Section 29.3.2.8).
- FSEC — Flash Security Register (see Section 29.3.2.2).

29.7.2 Reset While Flash Command Active

If a reset occurs while any Flash command is in progress, that command will be immediately aborted. The state of the word being programmed or the sector/block being erased is not guaranteed.

29.8 Interrupts

The Flash module can generate an interrupt when all Flash command operations have completed, when the Flash address, data and command buffers are empty.

Table 29-19. Flash Interrupt Sources

Interrupt Source	Interrupt Flag	Local Enable	Global (CCR) Mask
Flash Address, Data and Command Buffers empty	CBEIF (FSTAT register)	CBEIE (FCNFG register)	I Bit
All Flash commands completed	CCIF (FSTAT register)	CCIE (FCNFG register)	I Bit

NOTE

Vector addresses and their relative interrupt priority are determined at the MCU level.

29.8.1 Description of Flash Interrupt Operation

The logic used for generating interrupts is shown in Figure 29-30.

The Flash module uses the CBEIF and CCIF flags in combination with the CBIE and CCIE enable bits to generate the Flash command interrupt request.

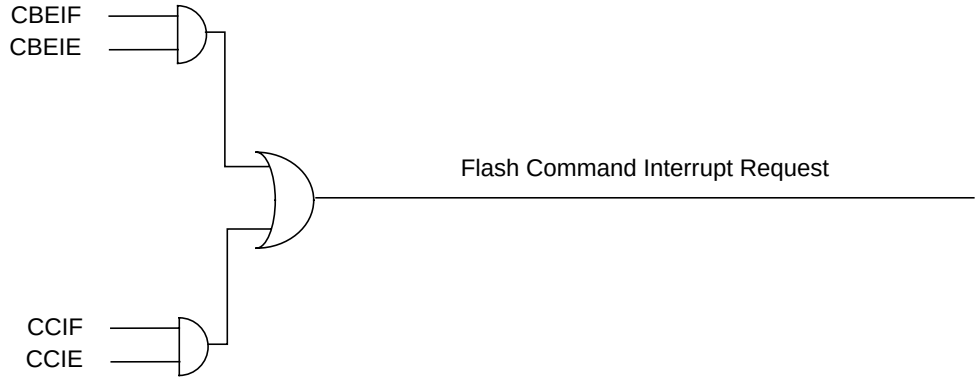

Figure 29-30. Flash Interrupt Implementation

For a detailed description of the register bits, refer to Section 29.3.2.4, “Flash Configuration Register (FCNFG)” and Section 29.3.2.6, “Flash Status Register (FSTAT)” .

Chapter 30
Security (S12X9SECV2)

30.1 Introduction

This specification describes the function of the security mechanism in the S12X chip family (S12X9SECV2).

30.1.1 Features

The user must be reminded that part of the security must lie with the application code. An extreme example would be application code that dumps the contents of the internal memory. This would defeat the purpose of security. At the same time, the user may also wish to put a backdoor in the application program. An example of this is the user downloads a security key through the SCI, which allows access to a programming routine that updates parameters stored in another section of the Flash memory.

The security features of the S12X chip family (in secure mode) are:

- Protect the contents of non-volatile memories (Flash, EEPROM)
- Execution of NVM commands is restricted
- Disable access to internal memory via background debug module (BDM)
- Disable access to internal Flash/EEPROM in expanded modes
- Disable debugging features for CPU and XGATE

Table 30-1 gives an overview over availability of security relevant features in unsecure and secure modes.

Table 30-1. Features Availability in Unsecure and Secure Modes

	Unsecure Mode						Secure Mode					
	NS	SS	NX	ES	EX	ST	NS	SS	NX	ES	EX	ST
Flash Array Access	✔	✔	✔[1]	✔[1]	✔[1]	✔[1]	✔	✔	—	—	—	—
EEPROM Array Access	✔	✔	✔	✔	✔	✔	✔	✔	—	—	—	—
NVM Commands	✔[2]	✔	✔[2]	✔[2]	✔[2]	✔	✔[2]	✔[2]	✔[2]	✔[2]	✔[2]	✔[2]
BDM	✔	✔	✔	✔	✔	✔	—	✔[3]	—	—	—	—
DBG Module Trace	✔	✔	✔	✔	✔	✔	—	—	—	—	—	—
XGATE Debugging	✔	✔	✔	✔	✔	✔	—	—	—	—	—	—
External Bus Interface	—	—	✔	✔	✔	✔	—	—	✔	✔	✔	✔
Internal status visible multiplexed on external bus	—	—	—	✔	✔	—	—	—	—	✔	✔	—
Internal accesses visible on external bus	—	—	—	—	—	✔	—	—	—	—	—	✔

1 Availability of Flash arrays in the memory map depends on ROMCTL/EROMCTL pins and/or the state of the ROMON/EROMON bits in the MMCCTL1 register. Please refer to the S12X_MMC block guide for detailed information.

2 Restricted NVM command set only. Please refer to the FTX/EETX block guides for detailed information.

3 BDM hardware commands restricted to peripheral registers only.

30.1.2 Modes of Operation

30.1.3 Securing the Microcontroller

Once the user has programmed the Flash and EEPROM, the chip can be secured by programming the security bits located in the options/security byte in the Flash memory array. These non-volatile bits will keep the device secured through reset and power-down.

The options/security byte is located at address 0xFF0F (= global address 0x7F_FF0F) in the Flash memory array. This byte can be erased and programmed like any other Flash location. Two bits of this byte are used for security (SEC[1:0]). On devices which have a memory page window, the Flash options/security byte is also available at address 0xBF0F by selecting page 0x3F with the PPAGE register. The contents of this byte are copied into the Flash security register (FSEC) during a reset sequence.

	7	6	5	4	3	2	1	0
0xFF0F	KEYEN1	KEYEN0	NV5	NV4	NV3	NV2	SEC1	SEC0

Figure 30-1. Flash Options/Security Byte

The meaning of the bits KEYEN[1:0] is shown in Table 30-2. Please refer to Section 30.1.5.1, "Unsecuring the MCU Using the Backdoor Key Access" for more information.

Table 30-2. Backdoor Key Access Enable Bits

KEYEN[1:0]	Backdoor Key Access Enabled
00	0 (disabled)
01	0 (disabled)
10	1 (enabled)
11	0 (disabled)

The meaning of the security bits SEC[1:0] is shown in Table 30-3. For security reasons, the state of device security is controlled by two bits. To put the device in unsecured mode, these bits must be programmed to SEC[1:0] = '10'. All other combinations put the device in a secured mode. The recommended value to put the device in secured state is the inverse of the unsecured state, i.e. SEC[1:0] = '01'.

Table 30-3. Security Bits

SEC[1:0]	Security State
00	1 (secured)
01	1 (secured)
10	***0 (unsecured)***
11	1 (secured)

NOTE

Please refer to the Flash block guide (FTX) for actual security configuration (in section "Flash Module Security").

30.1.4 Operation of the Secured Microcontroller

By securing the device, unauthorized access to the EEPROM and Flash memory contents can be prevented. However, it must be understood that the security of the EEPROM and Flash memory contents also depends on the design of the application program. For example, if the application has the capability of downloading code through a serial port and then executing that code (e.g. an application containing bootloader code), then this capability could potentially be used to read the EEPROM and Flash memory contents even when the microcontroller is in the secure state. In this example, the security of the application could be enhanced by requiring a challenge/response authentication before any code can be downloaded.

Secured operation has the following effects on the microcontroller:

30.1.4.1 Normal Single Chip Mode (NS)

- Background debug module (BDM) operation is completely disabled.
- Execution of Flash and EEPROM commands is restricted. Please refer to the NVM block guide (FTX) for details.
- Tracing code execution using the DBG module is disabled.
- Debugging XGATE code (breakpoints, single-stepping) is disabled.

30.1.4.2 Special Single Chip Mode (SS)

- BDM firmware commands are disabled.
- BDM hardware commands are restricted to the register space.
- Execution of Flash and EEPROM commands is restricted. Please refer to the NVM block guide (FTX) for details.
- Tracing code execution using the DBG module is disabled.
- Debugging XGATE code (breakpoints, single-stepping) is disabled.

Special single chip mode means BDM is active after reset. The availability of BDM firmware commands depends on the security state of the device. The BDM secure firmware first performs a blank check of both the Flash memory and the EEPROM. If the blank check succeeds, security will be temporarily turned off and the state of the security bits in the appropriate Flash memory location can be changed If the blank check fails, security will remain active, only the BDM hardware commands will be enabled, and the accessible memory space is restricted to the peripheral register area. This will allow the BDM to be used to erase the EEPROM and Flash memory without giving access to their contents. After erasing both Flash memory and EEPROM, another reset into special single chip mode will cause the blank check to succeed and the options/security byte can be programmed to “unsecured” state via BDM.

While the BDM is executing the blank check, the BDM interface is completely blocked, which means that all BDM commands are temporarily blocked.

30.1.4.3 Expanded Modes (NX, ES, EX, and ST)

- BDM operation is completely disabled.
- Internal Flash memory and EEPROM are disabled.
- Execution of Flash and EEPROM commands is restricted. Please refer to the NVM block guide (FTX) for details.
- Tracing code execution using the DBG module is disabled.
- Debugging XGATE code (breakpoints, single-stepping) is disabled.
-

30.1.5 Unsecuring the Microcontroller

Unsecuring the microcontroller can be done by three different methods:

1. Backdoor key access
2. Reprogramming the security bits
3. Complete memory erase (special modes)

30.1.5.1 Unsecuring the MCU Using the Backdoor Key Access

In normal modes (single chip and expanded), security can be temporarily disabled using the backdoor key access method. This method requires that:

- The backdoor key at 0xFF00–0xFF07 (= global addresses 0x7F_FF00–0x7F_FF07) has been programmed to a valid value.
- The KEYEN[1:0] bits within the Flash options/security byte select ‘enabled’.
- In single chip mode, the application program programmed into the microcontroller must be designed to have the capability to write to the backdoor key locations.

The backdoor key values themselves would not normally be stored within the application data, which means the application program would have to be designed to receive the backdoor key values from an external source (e.g. through a serial port). It is not possible to download the backdoor keys using background debug mode.

The backdoor key access method allows debugging of a secured microcontroller without having to erase the Flash. This is particularly useful for failure analysis.

NOTE

No word of the backdoor key is allowed to have the value 0x0000 or 0xFFFF.

30.1.5.2 Backdoor Key Access Sequence

These are the necessary steps for a successful backdoor key access sequence:

1. Set the KEYACC bit in the Flash configuration register FCNFG.
2. Write the first 16-bit word of the backdoor key to 0xFF00 (0x7F_FF00).
3. Write the second 16-bit word of the backdoor key to 0xFF02 (0x7F_FF02).
4. Write the third 16-bit word of the backdoor key to 0xFF04 (0x7F_FF04).
5. Write the fourth 16-bit word of the backdoor key to 0xFF06 (0x7F_FF06).
6. Clear the KEYACC bit in the Flash Configuration register FCNFG.

NOTE

Flash cannot be read while KEYACC is set. Therefore the code for the backdoor key access sequence must execute from RAM.

If all four 16-bit words match the Flash contents at 0xFF00–0xFF07 (0x7F_FF00–0x7F_FF07), the microcontroller will be unsecured and the security bits SEC[1:0] in the Flash Security register FSEC will be forced to the unsecured state ('10'). The contents of the Flash options/security byte are not changed by this procedure, and so the microcontroller will revert to the secure state after the next reset unless further action is taken as detailed below.

If any of the four 16-bit words does not match the Flash contents at 0xFF00–0xFF07 (0x7F_FF00–0x7F_FF07), the microcontroller will remain secured.

30.1.6 Reprogramming the Security Bits

In normal single chip mode (NS), security can also be disabled by erasing and reprogramming the security bits within Flash options/security byte to the unsecured value. Because the erase operation will erase the entire sector from 0xFE00–0xFFFF (0x7F_FE00–0x7F_FFFF), the backdoor key and the interrupt vectors will also be erased; this method is not recommended for normal single chip mode. The application software can only erase and program the Flash options/security byte if the Flash sector containing the Flash options/security byte is not protected (see Flash protection). Thus Flash protection is a useful means of preventing this method. The microcontroller will enter the unsecured state after the next reset following the programming of the security bits to the unsecured value.

This method requires that:

- The application software previously programmed into the microcontroller has been designed to have the capability to erase and program the Flash options/security byte, or security is first disabled using the backdoor key method, allowing BDM to be used to issue commands to erase and program the Flash options/security byte.
- The Flash sector containing the Flash options/security byte is not protected.

30.1.7 Complete Memory Erase (Special Modes)

The microcontroller can be unsecured in special modes by erasing the entire EEPROM and Flash memory contents.

When a secure microcontroller is reset into special single chip mode (SS), the BDM firmware verifies whether the EEPROM and Flash memory are erased. If any EEPROM or Flash memory address is not erased, only BDM hardware commands are enabled. BDM hardware commands can then be used to write to the EEPROM and Flash registers to mass erase the EEPROM and all Flash memory blocks.

When next reset into special single chip mode, the BDM firmware will again verify whether all EEPROM and Flash memory are erased, and this being the case, will enable all BDM commands, allowing the Flash options/security byte to be programmed to the unsecured value. The security bits SEC[1:0] in the Flash security register will indicate the unsecure state following the next reset.

Special single chip erase and unsecure sequence:

1. Reset into special single chip mode.
2. Write an appropriate value to the ECLKDIV register for correct timing.
3. Write 0xFF to the EPROT register to disable protection.
4. Write 0x30 to the ESTAT register to clear the PVIOL and ACCERR bits.
5. Write 0x0000 to the EDATA register (0x011A–0x011B).
6. Write 0x0000 to the EADDR register (0x0118–0x0119).
7. Write 0x41 (mass erase) to the ECMD register.
8. Write 0x80 to the ESTAT register to clear CBEIF.
9. Write an appropriate value to the FCLKDIV register for correct timing.
10. Write 0x00 to the FCNFG register to select Flash block 0.
11. Write 0x10 to the FTSTMOD register (0x0102) to set the WRALL bit, so the following writes affect all Flash blocks.
12. Write 0xFF to the FPROT register to disable protection.
13. Write 0x30 to the FSTAT register to clear the PVIOL and ACCERR bits.
14. Write 0x0000 to the FDATA register (0x010A–0x010B).
15. Write 0x0000 to the FADDR register (0x0108–0x0109).
16. Write 0x41 (mass erase) to the FCMD register.
17. Write 0x80 to the FSTAT register to clear CBEIF.
18. Wait until all CCIF flags are set.
19. Reset back into special single chip mode.
20. Write an appropriate value to the FCLKDIV register for correct timing.
21. Write 0x00 to the FCNFG register to select Flash block 0.
22. Write 0xFF to the FPROT register to disable protection.
23. Write 0xFFBE to Flash address 0xFF0E.
24. Write 0x20 (program) to the FCMD register.
25. Write 0x80 to the FSTAT register to clear CBEIF.
26. Wait until the CCIF flag in FSTAT is are set.
27. Reset into any mode.

Appendix A
Electrical Characteristics

A.1 General

This supplement contains the most accurate electrical information for the S12XD, S12XB & S12XA families microcontroller available at the time of publication.

This introduction is intended to give an overview on several common topics like power supply, current injection etc.

A.1.1 Parameter Classification

The electrical parameters shown in this supplement are guaranteed by various methods. To give the customer a better understanding the following classification is used and the parameters are tagged accordingly in the tables where appropriate.

NOTE

This classification is shown in the column labeled “C” in the parameter tables where appropriate.

P: Those parameters are guaranteed during production testing on each individual device.

C: Those parameters are achieved by the design characterization by measuring a statistically relevant sample size across process variations.

T: Those parameters are achieved by design characterization on a small sample size from typical devices under typical conditions unless otherwise noted. All values shown in the typical column are within this category.

D: Those parameters are derived mainly from simulations.

A.1.2 Power Supply

The MC9S12XDP512 utilizes several pins to supply power to the I/O ports, A/D converter, oscillator, and PLL as well as the digital core.

The V_{DDA}, V_{SSA} pair supplies the A/D converter and parts of the internal voltage regulator.

The V_{DDX}, V_{SSX}, V_{DDR}, and V_{SSR} pairs supply the I/O pins, V_{DDR} supplies also the internal voltage regulator.

V_{DD1}, V_{SS1}, V_{DD2}, and V_{SS2} are the supply pins for the digital logic, V_{DDPLL}, V_{SSPLL} supply the oscillator and the PLL.

V_{SS1} and V_{SS2} are internally connected by metal.

V_{DDA}, V_{DDX}, V_{DDR} as well as V_{SSA}, V_{SSX}, V_{SSR} are connected by anti-parallel diodes for ESD protection.

NOTE

In the following context V_{DD35} is used for either V_{DDA}, V_{DDR}, and V_{DDX}; V_{SS35} is used for either V_{SSA}, V_{SSR} and V_{SSX} unless otherwise noted.

I_{DD35} denotes the sum of the currents flowing into the V_{DDA}, V_{DDX} and V_{DDR} pins.

V_{DD} is used for V_{DD1}, V_{DD2} and V_{DDPLL}, V_{SS} is used for V_{SS1}, V_{SS2} and V_{SSPLL}.

I_{DD} is used for the sum of the currents flowing into V_{DD1} and V_{DD2}.

A.1.3 Pins

There are four groups of functional pins.

A.1.3.1 I/O Pins

Those I/O pins have a nominal level in the range of 3.15 V to 5.5 V. This class of pins is comprised of all port I/O pins, the analog inputs, BKGD and the $\overline{\text{RESET}}$ pins.The internal structure of all those pins is identical; however, some of the functionality may be disabled. For example, for the analog inputs the output drivers, pull-up and pull-down resistors are disabled permanently.

A.1.3.2 Analog Reference

This group is made up by the V_{RH} and V_{RL} pins.

A.1.3.3 Oscillator

The pins XFC, EXTAL, XTAL dedicated to the oscillator have a nominal 2.5 V level. They are supplied by V_{DDPLL}.

A.1.3.4 TEST

This pin is used for production testing only.

A.1.3.5 VREGEN

This pin is used to enable the on-chip voltage regulator.

A.1.4 Current Injection

Power supply must maintain regulation within operating V_{DD35} or V_{DD} range during instantaneous and operating maximum current conditions. If positive injection current ($V_{in} > V_{DD35}$) is greater than I_{DD35}, the injection current may flow out of V_{DD35} and could result in external power supply going out of regulation. Ensure external V_{DD35} load will shunt current greater than maximum injection current. This will be the greatest risk when the MCU is not consuming power; e.g., if no system clock is present, or if clock rate is very low which would reduce overall power consumption.

A.1.5 Absolute Maximum Ratings

Absolute maximum ratings are stress ratings only. A functional operation under or outside those maxima is not guaranteed. Stress beyond those limits may affect the reliability or cause permanent damage of the device.

This device contains circuitry protecting against damage due to high static voltage or electrical fields; however, it is advised that normal precautions be taken to avoid application of any voltages higher than maximum-rated voltages to this high-impedance circuit. Reliability of operation is enhanced if unused inputs are tied to an appropriate logic voltage level (e.g., either V_{SS35} or V_{DD35}).

Table A-1. Absolute Maximum Ratings[1]

Num	Rating	Symbol	Min	Max	Unit
1	I/O, regulator and analog supply voltage	V_{DD35}	–0.3	6.0	V
2	Digital logic supply voltage[2]	V_{DD}	–0.3	3.0	V
3	PLL supply voltage[2]	V_{DDPLL}	–0.3	3.0	V
4	Voltage difference V_{DDX} to V_{DDR} and V_{DDA}	Δ_{VDDX}	–0.3	0.3	V
5	Voltage difference V_{SSX} to V_{SSR} and V_{SSA}	Δ_{VSSX}	–0.3	0.3	V
6	Digital I/O input voltage	V_{IN}	–0.3	6.0	V
7	Analog reference	V_{RH}, V_{RL}	–0.3	6.0	V
8	XFC, EXTAL, XTAL inputs	V_{ILV}	–0.3	3.0	V
9	TEST input	V_{TEST}	–0.3	10.0	V
10	Instantaneous maximum current Single pin limit for all digital I/O pins[3]	I_D	–25	+25	mA
11	Instantaneous maximum current Single pin limit for XFC, EXTAL, XTAL[4]	I_{DL}	–25	+25	mA
12	Instantaneous maximum current Single pin limit for TEST [5]	I_{DT}	–0.25	0	mA
13	Storage temperature range	T_{stg}	–65	155	°C

1 Beyond absolute maximum ratings device might be damaged.

2 The device contains an internal voltage regulator to generate the logic and PLL supply out of the I/O supply. The absolute maximum ratings apply when the device is powered from an external source.

3 All digital I/O pins are internally clamped to V_{SSX} and V_{DDX}, V_{SSR} and V_{DDR} or V_{SSA} and V_{DDA}.

4 Those pins are internally clamped to V_{SSPLL} and V_{DDPLL}.

5 This pin is clamped low to V_{SSPLL}, but not clamped high. This pin must be tied low in applications.

A.1.6 ESD Protection and Latch-up Immunity

All ESD testing is in conformity with CDF-AEC-Q100 stress test qualification for automotive grade integrated circuits. During the device qualification ESD stresses were performed for the Human Body Model (HBM) and the Charge Device Model.

A device will be defined as a failure if after exposure to ESD pulses the device no longer meets the device specification. Complete DC parametric and functional testing is performed per the applicable device

specification at room temperature followed by hot temperature, unless specified otherwise in the device specification.

Table A-2. ESD and Latch-up Test Conditions

Model	Description	Symbol	Value	Unit
Human Body	Series resistance	R1	1500	Ohm
	Storage capacitance	C	100	pF
	Number of pulse per pin Positive Negative	 — —	 3 3	
Latch-up	Minimum input voltage limit		–2.5	V
	Maximum input voltage limit		7.5	V

Table A-3. ESD and Latch-Up Protection Characteristics

Num	C	Rating	Symbol	Min	Max	Unit
1	C	Human Body Model (HBM)	V_{HBM}	2000	—	V
2	C	Charge Device Model (CDM)	V_{CDM}	500	—	V
3	C	Latch-up current at T_A = 125°C Positive Negative	I_{LAT}	 +100 –100	 — —	mA
4	C	Latch-up current at T_A = 27°C Positive Negative	I_{LAT}	 +200 –200	 — —	mA

A.1.7 Operating Conditions

This section describes the operating conditions of the device. Unless otherwise noted those conditions apply to all the following data.

NOTE

Please refer to the temperature rating of the device (C, V, M) with regards to the ambient temperature T_A and the junction temperature T_J. For power dissipation calculations refer to Section A.1.8, "Power Dissipation and Thermal Characteristics".

Table A-4. Operating Conditions

Rating	Symbol	Min	Typ	Max	Unit
I/O, regulator and analog supply voltage	V_{DD35}	3.15	5	5.5	V
Digital logic supply voltage[1]	V_{DD}	2.35	2.5	2.75	V
PLL supply voltage[2]	V_{DDPLL}	2.35	2.5	2.75	V
Voltage difference V_{DDX} to V_{DDR} and V_{DDA}	Δ_{VDDX}	–0.1	0	0.1	V
Voltage difference V_{SSX} to V_{SSR} and V_{SSA}	Δ_{VSSX}	–0.1	0	0.1	V
Oscillator	f_{osc}	0.5	—	16	MHz
Bus frequency	f_{bus}	0.5	—	40	MHz
C parts Operating junction temperature range Operating ambient temperature range[2]	 T_J T_A	 –40 –40	 — 27	 100 85	°C
V parts Operating junction temperature range Operating ambient temperature range[2]	 T_J T_A	 –40 –40	 — 27	 120 105	°C
M parts Operating junction temperature range Operating ambient temperature range[2]	 T_J T_A	 –40 –40	 — 27	 140 125	°C

[1] The device contains an internal voltage regulator to generate the logic and PLL supply out of the I/O supply. The absolute maximum ratings apply when this regulator is disabled and the device is powered from an external source.

[2] Please refer to Section A.1.8, "Power Dissipation and Thermal Characteristics" for more details about the relation between ambient temperature T_A and device junction temperature T_J.

A.1.8 Power Dissipation and Thermal Characteristics

Power dissipation and thermal characteristics are closely related. The user must assure that the maximum operating junction temperature is not exceeded. The average chip-junction temperature (T_J) in °C can be obtained from:

$$T_J = T_A + (P_D \bullet \Theta_{JA})$$

T_J = Junction Temperature, [°C]

T_A = Ambient Temperature, [°C]

P_D = Total Chip Power Dissipation, [W]

Θ_{JA} = Package Thermal Resistance, [°C/W]

The total power dissipation can be calculated from:

$$P_D = P_{INT} + P_{IO}$$

P_{INT} = Chip Internal Power Dissipation, [W]

Two cases with internal voltage regulator enabled and disabled must be considered:

1. Internal voltage regulator disabled

$$P_{INT} = I_{DD} \cdot V_{DD} + I_{DDPLL} \cdot V_{DDPLL} + I_{DDA} \cdot V_{DDA}$$

$$P_{IO} = \sum_i R_{DSON} \cdot I_{IO_i}^2$$

P_{IO} is the sum of all output currents on I/O ports associated with V_{DDX} and V_{DDR}.
For R_{DSON} is valid:

$$R_{DSON} = \frac{V_{OL}}{I_{OL}} \text{;for outputs driven low}$$

respectively

$$R_{DSON} = \frac{V_{DD5} - V_{OH}}{I_{OH}} \text{;for outputs driven high}$$

2. Internal voltage regulator enabled

$$P_{INT} = I_{DDR} \cdot V_{DDR} + I_{DDA} \cdot V_{DDA}$$

I_{DDR} is the current shown in Table A-10. and not the overall current flowing into V_{DDR}, which additionally contains the current flowing into the external loads with output high.

$$P_{IO} = \sum_i R_{DSON} \cdot I_{IO_i}^2$$

P_{IO} is the sum of all output currents on I/O ports associated with V_{DDX} and V_{DDR}.

Table A-5. Thermal Package Characteristics[1]

Num	C	Rating	Symbol	Min	Typ	Max	Unit
		LQFP144					
1	T	Thermal resistance LQFP144, single sided PCB[2]	θ_{JA}	—	—	41	°C/W
2	T	Thermal resistance LQFP144, double sided PCB with 2 internal planes[3]	θ_{JA}	—	—	32	°C/W
3		Junction to Board LQFP 144	θ_{JB}	—	—	22	°C/W
4		Junction to Case LQFP 144[4]	θ_{JC}	—	—	7/4	°C/W
5		Junction to Package Top LQFP144[5]	Ψ_{JT}	—	—	3	°C/W
		LQFP112					
6	T	Thermal resistance LQFP112, single sided PCB[2]	θ_{JA}	—	—	43[3]/49[4]	°C/W
7	T	Thermal resistance LQFP112, double sided PCB with 2 internal planes[5]	θ_{JA}	—	—	32[3]/39[4]	°C/W
8		Junction to Board LQFP112	θ_{JB}	—	—	22[3]/27[4]	°C/W
9		Junction to Case LQFP112[4]	θ_{JC}	—	—	7[3]/11[4]	°C/W
10		Junction to Package Top LQFP112[5]	Ψ_{JT}	—	—	3/2	°C/W
		QFP80					
11	T	Thermal resistance QFP 80, single sided PCB[2]	θ_{JA}	—	—	45[3]/49[4]	°C/W
12	T	Thermal resistance QFP 80, double sided PCB with 2 internal planes[3]	θ_{JA}	—	—	33[3]/36[4]	°C/W
13	T	Junction to Board QFP 80	θ_{JB}	—	—	19[3]/20[4]	°C/W
14	T	Junction to Case QFP 80[6]	θ_{JC}	—	—	11[3]/14[4]	°C/W
15	T	Junction to Package Top QFP 80[7]	Ψ_{JT}	—	—	3	°C/W

1 The values for thermal resistance are achieved by package simulations

2 Junction to ambient thermal resistance, θ_{JA} was simulated to be equivalent to the JEDEC specification JESD51-2 in a horizontal configuration in natural convection.

3 Maskset L15Y / M84E in LQFP112 or QFP80

4 Maskset M42E in LQFP112 or QFP80

5 Junction to ambient thermal resistance, θ_{JA} was simulated to be equivalent to the JEDEC specification JESD51-7 in a horizontal configuration in natural convection.

6 Junction to case thermal resistance was simulated to be equivalent to the measured values using the cold plate technique with the cold plate temperature used as the “case” temperature. This basic cold plate measurement technique is described by MIL-STD 883D, Method 1012.1. This is the correct thermal metric to use to calculate thermal performance when the package is being used with a heat sink.

7 Thermal characterization parameter Ψ_{JT} is the “resistance” from junction to reference point thermocouple on top center of the case as defined in JESD51-2. Ψ_{JT} is a useful value to use to estimate junction temperature in a steady state customer enviroment.

A.1.9 I/O Characteristics

This section describes the characteristics of all I/O pins except EXTAL, XTAL,XFC,TEST,VREGEN and supply pins.

CAUTION

The internal pull up/pull down device specification is different depending on maskset.

Table A-6. 3.3-V I/O Characteristics

Conditions are 3.15 V < V_{DD35} < 3.6 V temperature from –40°C to +140°C, unless otherwise noted I/O Characteristics for all I/O pins except EXTAL, XTAL,XFC,TEST, VREGEN and supply pins.							
Num	**C**	**Rating**	**Symbol**	**Min**	**Typ**	**Max**	**Unit**
1	P	Input high voltage	V_{IH}	0.65*V_{DD35}	—	—	V
	T	Input high voltage	V_{IH}	—	—	V_{DD35} + 0.3	V
2	P	Input low voltage	V_{IL}	—	—	0.35*V_{DD35}	V
	T	Input low voltage	V_{IL}	V_{SS35} – 0.3	—	—	V
3	C	Input hysteresis	V_{HYS}		250		mV
4	C	Input leakage current (pins in high impedance input mode)[1] V_{in} = V_{DD35} or V_{SS35}	I_{in}	–1	—	1	µA
5	C	Output high voltage (pins in output mode) Partial drive I_{OH} = –0.75 mA	V_{OH}	V_{DD35} – 0.4	—	—	V
6	P	Output high voltage (pins in output mode) Full drive I_{OH} = –4 mA	V_{OH}	V_{DD35} – 0.4	—	—	V
7	C	Output low voltage (pins in output mode) Partial Drive I_{OL} = +0.9 mA	V_{OL}	—	—	0.4	V
8	P	Output low voltage (pins in output mode) Full Drive I_{OL} = +4.75 mA	V_{OL}	—	—	0.4	V
Internal pull up/pull down device specification (items 9 to 12) only valid for masksets 0L15Y & 1L15Y							
9	P	Internal pull up device current, tested at V_{IL} max.	I_{PUL}	—	—	–60	µA
10	C	Internal pull up device current, tested at V_{IH} min.	I_{PUH}	-6	—	-	µA
11	P	Internal pull down device current, tested at V_{IH} min.	I_{PDH}	—	—	60	µA
12	C	Internal pull down device current, tested at V_{IL} max.	I_{PDL}	6	—	—	µA
Internal pull up/pull down device specification (items 13 to 14) valid for all other masksets							
13	P	Internal pull up resistance VIH min > input voltage > VIL max	R_{PUL}	25		55	KΩ
14	P	Internal pull down resistance VIH min > input voltage > VIL max	R_{PDH}	25		55	KΩ
15	D	Input capacitance	C_{in}	—	6	—	pF
16	T	Injection current[2] Single pin limit Total device limit, sum of all injected currents	 I_{ICS} I_{ICP}	 –2.5 –25	—	 2.5 25	mA

Table A-6. 3.3-V I/O Characteristics

Conditions are 3.15 V < V_{DD35} < 3.6 V temperature from –40°C to +140°C, unless otherwise noted I/O Characteristics for all I/O pins except EXTAL, XTAL,XFC,TEST, VREGEN and supply pins.							
17	C	Port H, J, P interrupt input pulse filtered[3]	t_{PULSE}	—	—	3	µs
18	C	Port H, J, P interrupt input pulse passed[3]	t_{PULSE}	10	—	—	µs

1 Maximum leakage current occurs at maximum operating temperature. Current decreases by approximately one-half for each 8 C to 12 C in the temperature range from 50°C to 125°C.

2 Refer to Section A.1.4, “Current Injection” for more details

3 Parameter only applies in stop or pseudo stop mode.

Table A-7. 5-V I/O Characteristics

Conditions are 4.5 V < V_{DD35} < 5.5 V temperature from –40°C to +140°C, unless otherwise noted
I/O Characteristics for all I/O pins except EXTAL, XTAL,XFC,TEST, VREGEN and supply pins.

Num	C	Rating	Symbol	Min	Typ	Max	Unit
1	P	Input high voltage	V_{IH}	0.65*V_{DD35}	—	—	V
	T	Input high voltage	V_{IH}	—	—	V_{DD35} + 0.3	V
2	P	Input low voltage	V_{IL}	—	—	0.35*V_{DD35}	V
	T	Input low voltage	V_{IL}	V_{SS35} – 0.3	—	—	V
3	C	Input hysteresis	V_{HYS}		250	—	mV
4	P	Input leakage current (pins in high impedance input mode)[1] Measured at V_{in} = 5.5V and V_{in}=0V	I_{in}	–1	—	1	µA
5	C	Output high voltage (pins in output mode) Partial drive I_{OH} = –2 mA	V_{OH}	V_{DD35} – 0.8	—	—	V
6	P	Output high voltage (pins in output mode) Full drive I_{OH} = –10 mA	V_{OH}	V_{DD35} – 0.8	—	—	V
7	C	Output low voltage (pins in output mode) Partial drive I_{OL} = +2 mA	V_{OL}	—	—	0.8	V
8	P	Output low voltage (pins in output mode) Full drive I_{OL} = +10 mA	V_{OL}	—	—	0.8	V
Internal pull up/pull down device specification (items 9 to 12) only valid for masksets 0L15Y & 1L15Y							
9	P	Internal pull up device current, tested at V_{IL} max	I_{PUL}	—	—	–130	µA
10	C	Internal pull up device current, tested at V_{IH} min	I_{PUH}	–10	—	—	µA
11	P	Internal pull down device current, tested at V_{IH} min	I_{PDH}	—	—	130	µA
12	C	Internal pull down device current, tested at V_{IL} max	I_{PDL}	10	—	—	µA
Internal pull up/pull down device specification (items 13 to 14) valid for all other masksets							
13	P	Internal pull up resistance VIH min > input voltage > VIL max	R_{PUL}	25		55	KΩ
14	P	Internal pull down resistance VIH min > input voltage > VIL max	R_{PDH}	25		55	KΩ
15	D	Input capacitance	C_{in}	—	6	—	pF
16	T	Injection current[2] Single pin limit Total device Limit, sum of all injected currents	 I_{ICS} I_{ICP}	 –2.5 –25	—	 2.5 25	mA
17	P	Port H, J, P interrupt input pulse filtered[3]	t_{PULSE}	—	—	3	µs
18	P	Port H, J, P interrupt input pulse passed[3]	t_{PULSE}	10	—	—	µs

[1] Maximum leakage current occurs at maximum operating temperature. Current decreases by approximately one-half for each 8 C to 12 C in the temperature range from 50°C to 125°C.

[2] Refer to Section A.1.4, “Current Injection” for more details

[3] Parameter only applies in stop or pseudo stop mode.

Table A-8. I/O Characteristics for Port C, D, PE5, PE6, and PK7 for Reduced Input Voltage Thresholds

Conditions are 4.5 V < V_{DD35} < 5.5 V Temperature from –40°C to +140°C, unless otherwise noted							
Num	**C**	**Rating**	**Symbol**	**Min**	**Typ**	**Max**	**Unit**
1	P	Input high voltage	V_{IH}	1.75	—	—	V
2	P	Input low voltage	V_{IL}	—	—	0.75	V
3	C	Input hysteresis	V_{HYS}	—	100	—	mV

A.1.10 Supply Currents

This section describes the current consumption characteristics of the device as well as the conditions for the measurements.

A.1.10.1 Measurement Conditions

All measurements are without output loads. Unless otherwise noted the currents are measured in single chip mode and the CPU and XGATE code is executed from RAM, V_{DD35}=5.5V, internal voltage regulator is enabled and the bus frequency is 40MHz using a 4-MHz external clock source (PE7=$\overline{XCLKS}$=0). Production testing is performed using a square wave signal at the EXTAL input.

Table A-9. shows the configuration of the peripherals for run current measurement.

Table A-9. Peripheral Configurations for Run Supply Current Measurements

Peripheral	Configuration
MSCAN	configured to loop-back mode using a bit rate of 1Mbit/s
SPI	configured to master mode, continously transmit data (0x55 or 0xAA) at 1Mbit/s
SCI	configured into loop mode, continously transmit data (0x55) at speed of 57600 baud
IIC	operate in master mode and continously transmit data (0x55 or 0xAA) at the bit rate of 100Kbit/s
PWM	configured to toggle its pins at the rate of 40kHz
ECT	the peripheral shall be configured to output compare mode, Pulse accumulator and modulus counter enabled.
ATD	the peripheral is configured to operate at its maximum specified frequency and to continuously convert voltages on all input channels in sequence.
XGATE	XGATE fetches code from RAM, XGATE runs in an infinite loop , it reads the Status and Flag registers of CAN's, SPI's, SCI's in sequence and does some bit manipulation on the data
COP	COP Warchdog Rate 2^{24}
RTI	enabled, RTI Control Register (RTICTL) set to $FF
API	the module is configured to run from the RC oscillator clock source.
PIT	PIT is enabled, Micro-timer register 0 and 1 loaded with $0F and timer registers 0 to 3 are loaded with $03/07/0F/1F.
DBG	the module is enabled and the comparators are configured to trigger in outside range. The range covers all the code executed by the core.

A.1.10.2 Additional Remarks

In expanded modes the currents flowing in the system are highly dependent on the load at the address, data, and control signals as well as on the duty cycle of those signals. No generally applicable numbers can given. A very good estimate is to take the single chip currents and add the currents due to the external loads.

Table A-10. Run and Wait Current Characteristics

Conditions are shown in Table A-4 unless otherwise noted

Num	C	Rating	Symbol	Min	Typ	Max	Unit
Run supply current (Peripheral Configuration see Table A-9.)							
1	P	Peripheral Set[1] f_{osc}=4MHz, f_{bus}=40MHz	I_{DD35}			110	mA
2	 C T T	Peripheral Set[1] f_{osc}=4MHz, f_{bus}=40MHz f_{osc}=4MHz, f_{bus}=20MHz f_{osc}=4MHz, f_{bus}=8MHz			 90 45 18		
3	 T T T	Peripheral Set[2] f_{osc}=4MHz, f_{bus}=40MHz f_{osc}=4MHz, f_{bus}=20MHz f_{osc}=4MHz, f_{bus}=8MHz			 70 35 15		
4	 T T T	Peripheral Set[3] f_{osc}=4MHz, f_{bus}=40MHz f_{osc}=4MHz, f_{bus}=20MHz f_{osc}=4MHz, f_{bus}=8MHz			 60 30 13		
5	 T T T	Peripheral Set[4] f_{osc}=4MHz, f_{bus}=40MHz f_{osc}=4MHz, f_{bus}=20MHz f_{osc}=4MHz, f_{bus}=8MHz			 56 28 12		
6	 T T T	Peripheral Set[5] f_{osc}=4MHz, f_{bus}=40MHz f_{osc}=4MHz, f_{bus}=20MHz f_{osc}=4MHz, f_{bus}=8MHz			 53 26 11		
7	 T T T	Peripheral Set[6] f_{osc}=4MHz, f_{bus}=40MHz f_{osc}=4MHz, f_{bus}=20MHz f_{osc}=4MHz, f_{bus}=8MHz			 50 25 10		
Wait supply current							
8	P	Peripheral Set[1] ,PLL on XGATE executing code from RAM	I_{DDW}			95	mA
9	 T T	Peripheral Set[2] f_{osc}=4MHz, f_{bus}=40MHz f_{osc}=4MHz, f_{bus}=8MHz			 50 10		
10	P	All modules disabled, RTI enabled, PLL off				10	

[1] The following peripherals are on: ATD0/ATD1/ECT/IIC1/PWM/SPI0-SPI2/SCI0-SCI2/CAN0-CAN4/XGATE

[2] The following peripherals are on: ATD0/ATD1/ECT/IIC1/PWM/SPI0-SPI2/SCI0-SCI2/CAN0-CAN4

[3] The following peripherals are on: ATD0/ATD1/ECT/IIC1/PWM/SPI0-SPI2/SCI0-SCI2/

[4] The following peripherals are on: ATD0/ATD1/ECT/IIC1/PWM/SPI0-SPI2

[5] The following peripherals are on: ATD0/ATD1/ECT/IIC1/PWM/

[6] The following peripherals are on: ATD0/ATD1/ECT/IIC1/

Table A-11. Pseudo Stop and Full Stop Current

Conditions are shown in Table A-4 unless otherwise noted							
Num	**C**	**Rating**	**Symbol**	**Min**	**Typ**	**Max**	**Unit**
Pseudo stop current (API, RTI, and COP disabled) PLL off							
10	C	–40°C	I_{DDPS}	—	200	—	µA
	P	27°C		—	300	500	
	C	70°C		—	400	—	
	C	85°C		—	500	—	
	P	"C" Temp Option 100°C		—	600	2500	
	C	105°C		—	800	—	
	P	"V" Temp Option 120°C		—	1000	3500	
	C	125°C		—	1200	—	
	P	"M" Temp Option 140°C		—	1500	7000	
Pseudo stop current (API, RTI, and COP enabled) PLL off							
11	C	–40°C	I_{DDPS}	—	500	—	µA
	C	27°C		—	750	—	
	C	70°C		—	850	—	
	C	85°C		—	1000	—	
	C	105°C		—	1200	—	
	C	125°C		—	1500	—	
	C	140°C		—	2000	—	
Stop Current							
12	C	–40°C	I_{DDS}	—	20	—	µA
	P	27°C		—	30	100	
	C	70°C		—	100	—	
	C	85°C		—	200	—	
	P	"C" Temp Option 100°C		—	250	2000	
	C	105°C		—	400	—	
	P	"V" Temp Option 120°C		—	500	3000	
	C	125°C		—	600	—	
	P	"M" Temp Option 140°C		—	1000	7000	

A.2 ATD Characteristics

This section describes the characteristics of the analog-to-digital converter.

A.2.1 ATD Operating Characteristics

The Table A-12 and Table A-13 show conditions under which the ATD operates.

The following constraints exist to obtain full-scale, full range results:

$$V_{SSA} \leq V_{RL} \leq V_{IN} \leq V_{RH} \leq V_{DDA}.$$

This constraint exists since the sample buffer amplifier can not drive beyond the power supply levels that it ties to. If the input level goes outside of this range it will effectively be clipped.

Table A-12. ATD 5-V Operating Characteristics

Conditions are shown in Table A-4 unless otherwise noted, supply voltage 4.5 V < V_{DDA} < 5.5 V							
Num	**C**	**Rating**	**Symbol**	**Min**	**Typ**	**Max**	**Unit**
1	D	Reference potential Low High	 V_{RL} V_{RH}	 V_{SSA} $V_{DDA}/2$	 — —	 $V_{DDA}/2$ V_{DDA}	 V V
2	C	Differential reference voltage[1]	V_{RH}-V_{RL}	4.50	5.00	5.5	V
3	D	ATD clock frequency	f_{ATDCLK}	0.5		2.0	MHz
4	D	ATD 10-bit conversion period Clock cycles[2] Conv, time at 2.0 MHz ATD clock f_{ATDCLK}	 N_{CONV10} T_{CONV10}	 14 7	 — —	 28 14	 Cycles µs
5	D	ATD 8-Bit conversion period Clock cycles[2] Conv, time at 2.0 MHz ATD clock f_{ATDCLK}	 N_{CONV8} T_{CONV8}	 12 6	 — —	 26 13	 Cycles µs
6	D	Recovery time (V_{DDA} = 5.0 Volts)	t_{REC}	—	—	20	µs
7	P	Reference supply current 2 ATD blocks on	I_{REF}	—	—	0.750	mA
8	P	Reference supply current 1 ATD block on	I_{REF}	—	—	0.375	mA

1 Full accuracy is not guaranteed when differential voltage is less than 4.50 V

2 The minimum time assumes a final sample period of 2 ATD clocks cycles while the maximum time assumes a final sample period of 16 ATD clocks.

Table A-13. ATD Operating Characteristics 3.3V

Conditions are shown in Table A-4 unless otherwise noted, Supply Voltage 3.15V < VDDA < 3.6V							
Num	**C**	**Rating**	**Symbol**	**Min**	**Typ**	**Max**	**Unit**
1	D	Reference potential Low High	 V_{RL} V_{RH}	 V_{SSA} $V_{DDA}/2$	 — —	 $V_{DDA}/2$ V_{DDA}	 V V
2	C	Differential reference voltage[1]	V_{RH}-V_{RL}	3.15	3.3	3.6	V
3	D	ATD clock frequency	f_{ATDCLK}	0.5	—	2.0	MHz
4	D	ATD 10-bit conversion period Clock cycles[2] Conv, time at 2.0 MHz ATD clock f_{ATDCLK}	 N_{CONV10} T_{CONV10}	 14 7	 — —	 28 14	 Cycles µs
5	D	ATD 8-bit conversion period Clock cycles[2] Conv, time at 2.0 MHz ATD clock f_{ATDCLK}	 N_{CONV8} T_{CONV8}	 12 6	 — —	 26 13	 Cycles µs
6	D	Recovery time (V_{DDA} = 5.0 Volts)	t_{REC}	—	—	20	µs
7	P	Reference supply current 2 ATD blocks on	I_{REF}	—	—	0.500	mA
8	P	Reference supply current 1 ATD block on	I_{REF}	—	—	0.250	mA

1 Full accuracy is not guaranteed when differential voltage is less than 3.15 V

2 The minimum time assumes a final sample period of 2 ATD clocks cycles while the maximum time assumes a final sample period of 16 ATD clocks.

A.2.2 Factors Influencing Accuracy

Three factors — source resistance, source capacitance and current injection — have an influence on the accuracy of the ATD.

A.2.2.1 Source Resistance

Due to the input pin leakage current as specified in Table A-7 in conjunction with the source resistance there will be a voltage drop from the signal source to the ATD input. The maximum source resistance R_S specifies results in an error of less than 1/2 LSB (2.5 mV) at the maximum leakage current. If device or operating conditions are less than worst case or leakage-induced error is acceptable, larger values of source resistance is allowed.

A.2.2.2 Source Capacitance

When sampling an additional internal capacitor is switched to the input. This can cause a voltage drop due to charge sharing with the external and the pin capacitance. For a maximum sampling error of the input voltage ≤ 1LSB, then the external filter capacitor, $C_f \geq 1024 * (C_{INS} – C_{INN})$.

A.2.2.3 Current Injection

There are two cases to consider.

1. A current is injected into the channel being converted. The channel being stressed has conversion values of $3FF ($FF in 8-bit mode) for analog inputs greater than V_{RH} and $000 for values less than V_{RL} unless the current is higher than specified as disruptive condition.
2. Current is injected into pins in the neighborhood of the channel being converted. A portion of this current is picked up by the channel (coupling ratio K), This additional current impacts the accuracy of the conversion depending on the source resistance.

   The additional input voltage error on the converted channel can be calculated as:

   $$V_{ERR} = K * R_S * I_{INJ}$$

   with I_{INJ} being the sum of the currents injected into the two pins adjacent to the converted channel.

Table A-14. ATD Electrical Characteristics

Conditions are shown in Table A-4 unless otherwise noted							
Num	**C**	**Rating**	**Symbol**	**Min**	**Typ**	**Max**	**Unit**
1	C	Max input source resistance	R_S	—	—	1	KΩ
2	T	Total input capacitance Non sampling Sampling	 C_{INN} C_{INS}	 — —	 — —	 10 22	pF
3	C	Disruptive analog input current[1]	I_{NA}	–2.5	—	2.5	mA
4	C	Coupling ratio positive current injection	K_p	—	—	10^{-4}	A/A
5	C	Coupling ratio negative current injection	K_n	—	—	10^{-2}	A/A

[1] See also Table A-7. item 14

A.2.3 ATD Accuracy

A.2.3.1 5-V Range

Table A-15 specifies the ATD conversion performance excluding any errors due to current injection, input capacitance, and source resistance.

Table A-15. 5-V ATD Conversion Performance

Conditions are shown in Table A-4 unless otherwise noted $V_{REF} = V_{RH}–V_{RL}$ = 5.12 V. Resulting to one 8-bit count = 20 mV and one 10-bit count = 5 mV f_{ATDCLK} = 2.0 MHz							
Num	**C**	**Rating**	**Symbol**	**Min**	**Typ**	**Max**	**Unit**
1	P	10-bit resolution	LSB	—	5	—	mV
2	P	10-bit differential nonlinearity	DNL	–1	—	1	Counts
3	P	10-bit integral nonlinearity	INL	–2.5	±1.5	2.5	Counts
4	P	10-bit absolute error[1]	AE	–3	±2.0	3	Counts
5	P	8-bit resolution	LSB	—	20	—	mV
6	P	8-bit differential nonlinearity	DNL	–0.5	—	0.5	Counts
7	P	8-bit integral nonlinearity	INL	–1.0	±0.5	1.0	Counts
8	P	8-bit absolute error[1]	AE	–1.5	±1.0	1.5	Counts

[1] These values include the quantization error which is inherently 1/2 count for any A/D converter.

A.2.3.2 3.3-V Range

Table A-16 specifies the ATD conversion performance excluding any errors due to current injection, input capacitance, and source resistance.

Table A-16. 3.3-V ATD Conversion Performance

Conditions are shown in Table A-4 unless otherwise noted $V_{REF} = V_{RH}–V_{RL}$ = 3.328 V. Resulting to one 8-bit count = 13mV and one 10-bit count = 3.25 mV f_{ATDCLK} = 2.0 MHz							
Num	C	**Rating**	**Symbol**	**Min**	**Typ**	**Max**	**Unit**
1	P	10-bit resolution	LSB	—	3.25	—	mV
2	P	10-bit differential nonlinearity	DNL	–1.5	—	1.5	Counts
3	P	10-bit integral nonlinearity	INL	–3.5	±1.5	3.5	Counts
4	P	10-bit absolute error[1]	AE	–5	±2.5	5	Counts
5	P	8-bit resolution	LSB	—	13	—	mV
6	P	8-bit differential nonlinearity	DNL	–0.5	—	0.5	Counts
7	P	8-bit integral nonlinearity	INL	–1.5	±1.0	1.5	Counts
8	P	8-bit absolute error[1]	AE	–2.0	±1.5	2.0	Counts

[1] These values include the quantization error which is inherently 1/2 count for any A/D converter.

A.2.3.3 ATD Accuracy Definitions

For the following definitions see also Figure A-1.

Differential non-linearity (DNL) is defined as the difference between two adjacent switching steps.

$$DNL(i) = \frac{V_i - V_{i-1}}{1LSB} - 1$$

The integral non-linearity (INL) is defined as the sum of all DNLs:

$$INL(n) = \sum_{i=1}^{n} DNL(i) = \frac{V_n - V_0}{1LSB} - n$$

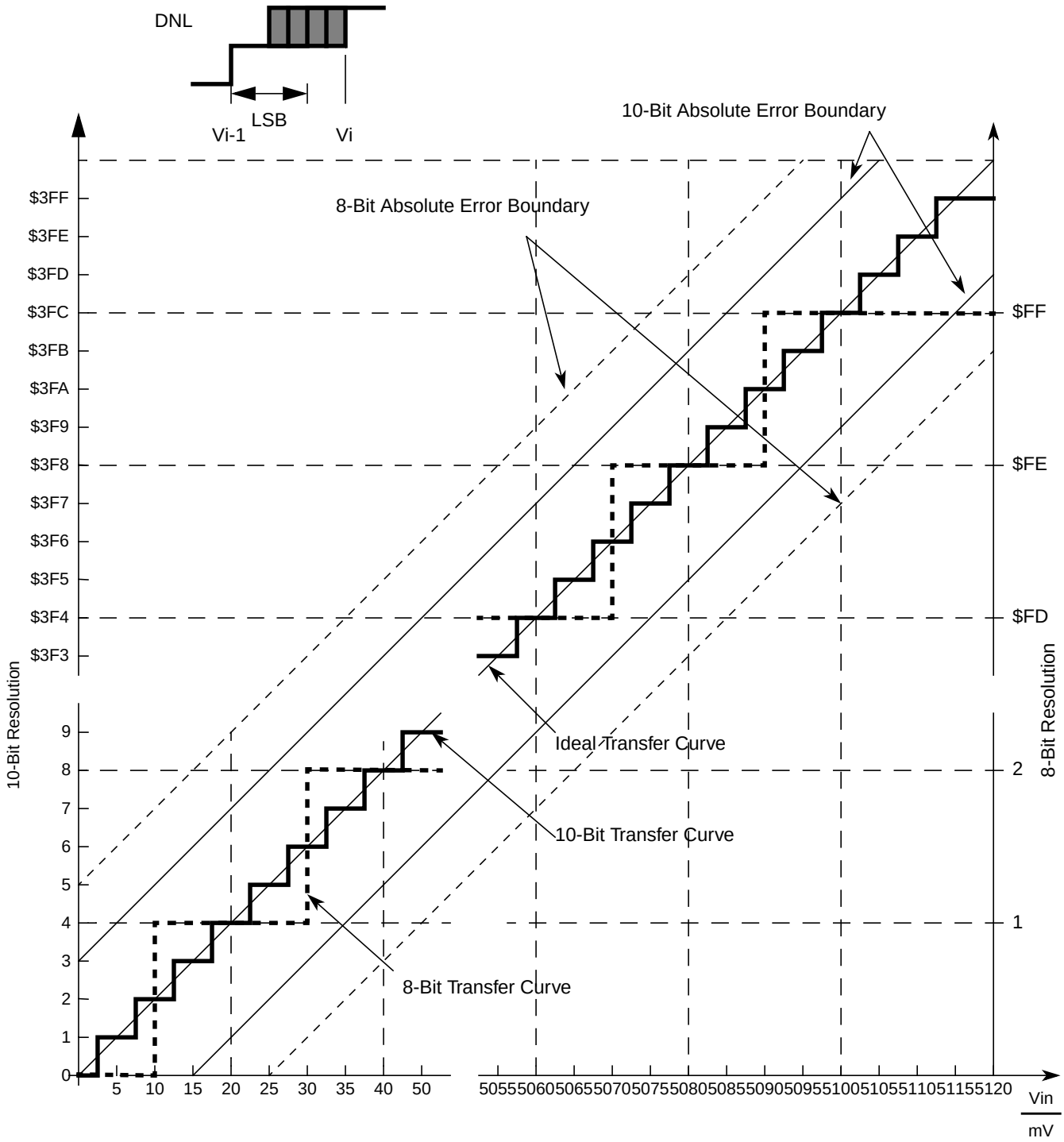

Figure A-1. ATD Accuracy Definitions

NOTE

Figure A-1 shows only definitions, for specification values refer to Table A-15.

A.3 NVM, Flash, and EEPROM

NOTE

Unless otherwise noted the abbreviation NVM (nonvolatile memory) is used for both Flash and EEPROM.

A.3.1 NVM Timing

The time base for all NVM program or erase operations is derived from the oscillator. A minimum oscillator frequency f_{NVMOSC} is required for performing program or erase operations. The NVM modules do not have any means to monitor the frequency and will not prevent program or erase operation at frequencies above or below the specified minimum. Attempting to program or erase the NVM modules at a lower frequency a full program or erase transition is not assured.

The Flash and EEPROM program and erase operations are timed using a clock derived from the oscillator using the FCLKDIV and ECLKDIV registers respectively. The frequency of this clock must be set within the limits specified as f_{NVMOP}.

The minimum program and erase times shown in Table A-17 are calculated for maximum f_{NVMOP} and maximum f_{bus}. The maximum times are calculated for minimum f_{NVMOP} and a f_{bus} of 2 MHz.

A.3.1.1 Single Word Programming

The programming time for single word programming is dependant on the bus frequency as a well as on the frequency f_{NVMOP} and can be calculated according to the following formula.

$$t_{swpgm} = 9 \cdot \frac{1}{f_{NVMOP}} + 25 \cdot \frac{1}{f_{bus}}$$

A.3.1.2 Burst Programming

This applies only to the Flash where up to 64 words in a row can be programmed consecutively using burst programming by keeping the command pipeline filled. The time to program a consecutive word can be calculated as:

$$t_{bwpgm} = 4 \cdot \frac{1}{f_{NVMOP}} + 9 \cdot \frac{1}{f_{bus}}$$

The time to program a whole row is:

$$t_{brpgm} = t_{swpgm} + 63 \cdot t_{bwpgm}$$

Burst programming is more than 2 times faster than single word programming.

A.3.1.3 Sector Erase

Erasing a 1024-byte Flash sector or a 4-byte EEPROM sector takes:

$$t_{era} \approx 4000 \cdot \frac{1}{f_{NVMOP}}$$

The setup time can be ignored for this operation.

A.3.1.4 Mass Erase

Erasing a NVM block takes:

$$t_{mass} \approx 20000 \cdot \frac{1}{f_{NVMOP}}$$

The setup time can be ignored for this operation.

A.3.1.5 Blank Check

The time it takes to perform a blank check on the Flash or EEPROM is dependant on the location of the first non-blank word starting at relative address zero. It takes one bus cycle per word to verify plus a setup of the command.

$$t_{check} \approx location \cdot t_{cyc} + 10 \cdot t_{cyc}$$

Table A-17. NVM Timing Characteristics

Conditions are shown in Table A-4 unless otherwise noted							
Num	**C**	**Rating**	**Symbol**	**Min**	**Typ**	**Max**	**Unit**
1	D	External oscillator clock	f_{NVMOSC}	0.5	—	80[1]	MHz
2	D	Bus frequency for programming or erase operations	f_{NVMBUS}	1	—	—	MHz
3	D	Operating frequency	f_{NVMOP}	150	—	200	kHz
4	P	Single word programming time	t_{swpgm}	46[2]	—	74.5[3]	µs
5	D	Flash burst programming consecutive word [4]	t_{bwpgm}	20.4[2]	—	31[3]	µs
6	D	Flash burst programming time for 64 words[4]	t_{brpgm}	1331.2[2]	—	2027.5[3]	µs
7	P	Sector erase time	t_{era}	20[5]	—	26.7[3]	ms
8	P	Mass erase time	t_{mass}	100[5]	—	133[3]	ms
9	D	Blank check time Flash per block	t_{check}	11[6]	—	65546[7]	t_{cyc}
10	D	Blank check time EEPROM per block	t_{check}	11[6]	—	2058[7]	t_{cyc}

1 Restrictions for oscillator in crystal mode apply.

2 Minimum programming times are achieved under maximum NVM operating frequency f_{NVMOP} and maximum bus frequency f_{bus}.

3 Maximum erase and programming times are achieved under particular combinations of f_{NVMOP} and bus frequency f_{bus}. Refer to formulae in Sections Section A.3.1.1, “Single Word Programming” – Section A.3.1.4, “Mass Erase” for guidance.

4 Burst programming operations are not applicable to EEPROM

5 Minimum erase times are achieved under maximum NVM operating frequency, f_{NVMOP}

6 Minimum time, if first word in the array is not blank

7 Maximum time to complete check on an erased block

A.3.2 NVM Reliability

The reliability of the NVM blocks is guaranteed by stress test during qualification, constant process monitors and burn-in to screen early life failures. The program/erase cycle count on the sector is incremented every time a sector or mass erase event is executed

Table A-18. NVM Reliability Characteristics[1]

Conditions are shown in Table A-4 unless otherwise noted							
Num	**C**	**Rating**	**Symbol**	**Min**	**Typ**	**Max**	**Unit**
Flash Reliability Characteristics							
1	C	Data retention after 10,000 program/erase cycles at an average junction temperature of $T_{Javg} \leq 85°C$	t_{FLRET}	15	100[2]	—	Years
2	C	Data retention with <100 program/erase cycles at an average junction temperature $T_{Javg} \leq 85°C$		20	100[2]	—	
3	C	Number of program/erase cycles ($-40°C \leq T_J \leq 0°C$)	n_{FL}	10,000	—	—	Cycles
4	C	Number of program/erase cycles ($0°C \leq T_J \leq 140°C$)		10,000	100,000[3]	—	
EEPROM Reliability Characteristics							
5	C	Data retention after up to 100,000 program/erase cycles at an average junction temperature of $T_{Javg} \leq 85°C$	t_{EEPRET}	15	100[2]	—	Years
6	C	Data retention with <100 program/erase cycles at an average junction temperature $T_{Javg} \leq 85°C$		20	100[2]	—	
7	C	Number of program/erase cycles ($-40°C \leq T_J \leq 0°C$)	n_{EEP}	10,000	—	—	Cycles
8	C	Number of program/erase cycles ($0°C < T_J \leq 140°C$)		100,000	300,000[3]	—	

1 T_{Javg} will not exeed 85°C considering a typical temperature profile over the lifetime of a consumer, industrial or automotive application.

2 Typical data retention values are based on intrinsic capability of the technology measured at high temperature and de-rated to 25°C using the Arrhenius equation. For additional information on how Freescale defines Typical Data Retention, please refer to Engineering Bulletin EB618.

3 Spec table quotes typical endurance evaluated at 25°C for this product family, typical endurance at various temperature can be estimated using the graph below. For additional information on how Freescale defines Typical Endurance, please refer to Engineering Bulletin EB619.

Figure A-2. Typical Endurance vs Temperature

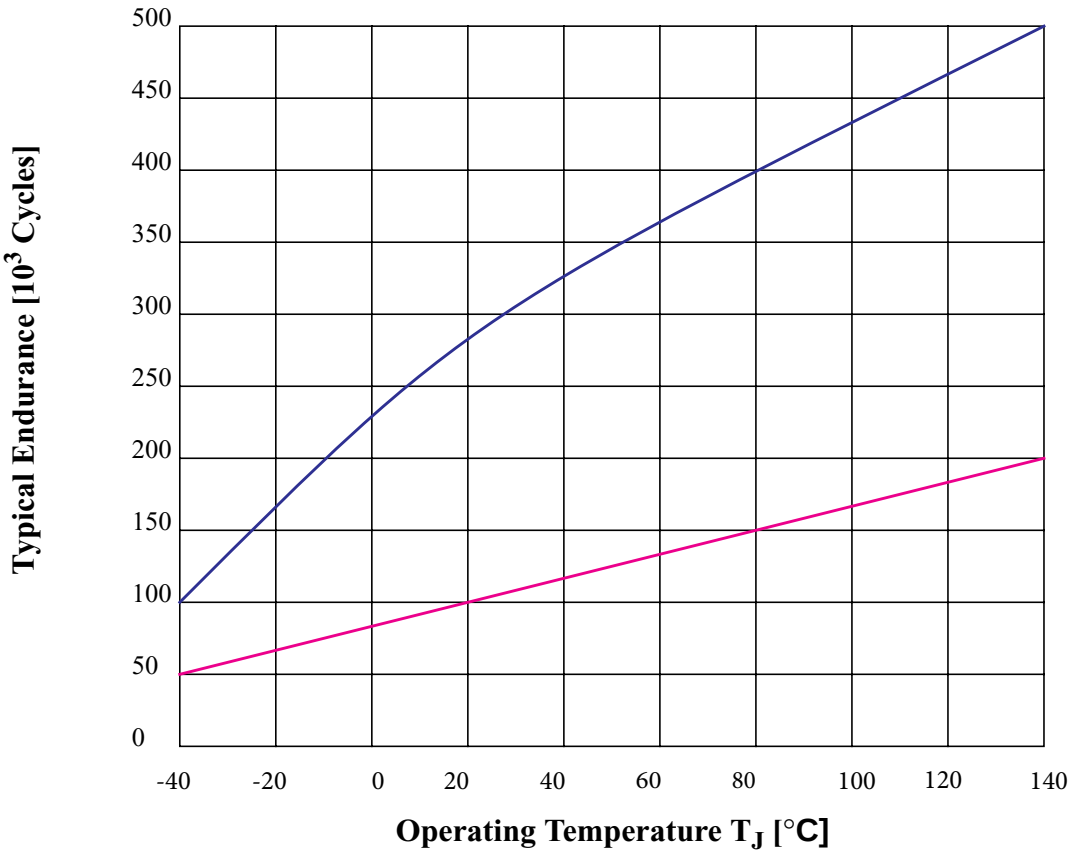

------ Flash
------ EEPROM

A.4 Voltage Regulator

Table A-19. Voltage Regulator Electrical Characteristics

Num	C	Characteristic	Symbol	Min	Typ	Max	Unit
1	P	Input voltages	$V_{VDDR,A}$	3.15	—	5.5	V
2	P	Output voltage core Full performance mode Reduced power mode Shutdown mode	V_{DD}	 2.35 1.4 —	 2.54 2.25 —[1]	 2.75 2.75 —	 V V V
3	P	Output Voltage PLL Full Performance Mode Reduced power mode Shutdown mode	V_{DDPLL}	 2.35 1.25 —	 2.54 2.25 —[2]	 2.75 2.75 —	 V V V
4	P	Low-voltage interrupt[3] Assert level Deassert level	 V_{LVIA} V_{LVID}	 4.0 4.15	 4.37 4.52	 4.66 4.77	 V V
5	P	Low-voltage reset[4 5] Assert level	V_{LVRA}	 2.25	 —	 —	 V
6	C	Power-on reset[6] Assert level Deassert level	 V_{PORA} V_{PORD}	 0.97 —	 — —	 — 2.05	 V V
7	C	Trimmed API internal clock[7] $\Delta f / f_{nominal}$	df_{API}	– 10%	—	+ 10%	—

1 High impedance output

2 High impedance output

3 Monitors V_{DDA}, active only in full performance mode. Indicates I/O and ADC performance degradation due to low supply voltage.

4 Monitors V_{DD}, active only in full performance mode. MCU is monitored by the POR in RPM (see Figure A-1)

5 Digital functionality is guaranteed in the range between V_{DD}(min) and V_{LVRA}(min).

6 Monitors V_{DD}. Active in all modes.

7 The API Trimming bits must be set that the minimum periode equals to 0.2 ms. $f_{nominal}$ = 1/0.2ms

A.4.1 Chip Power-up and Voltage Drops

MC9S12XDP512 sub modules LVI (low voltage interrupt), POR (power-on reset) and LVR (low voltage reset) handle chip power-up or drops of the supply voltage.

Figure 0-1 MC9S12XDP512 - Chip Power-up and Voltage Drops (not scaled)

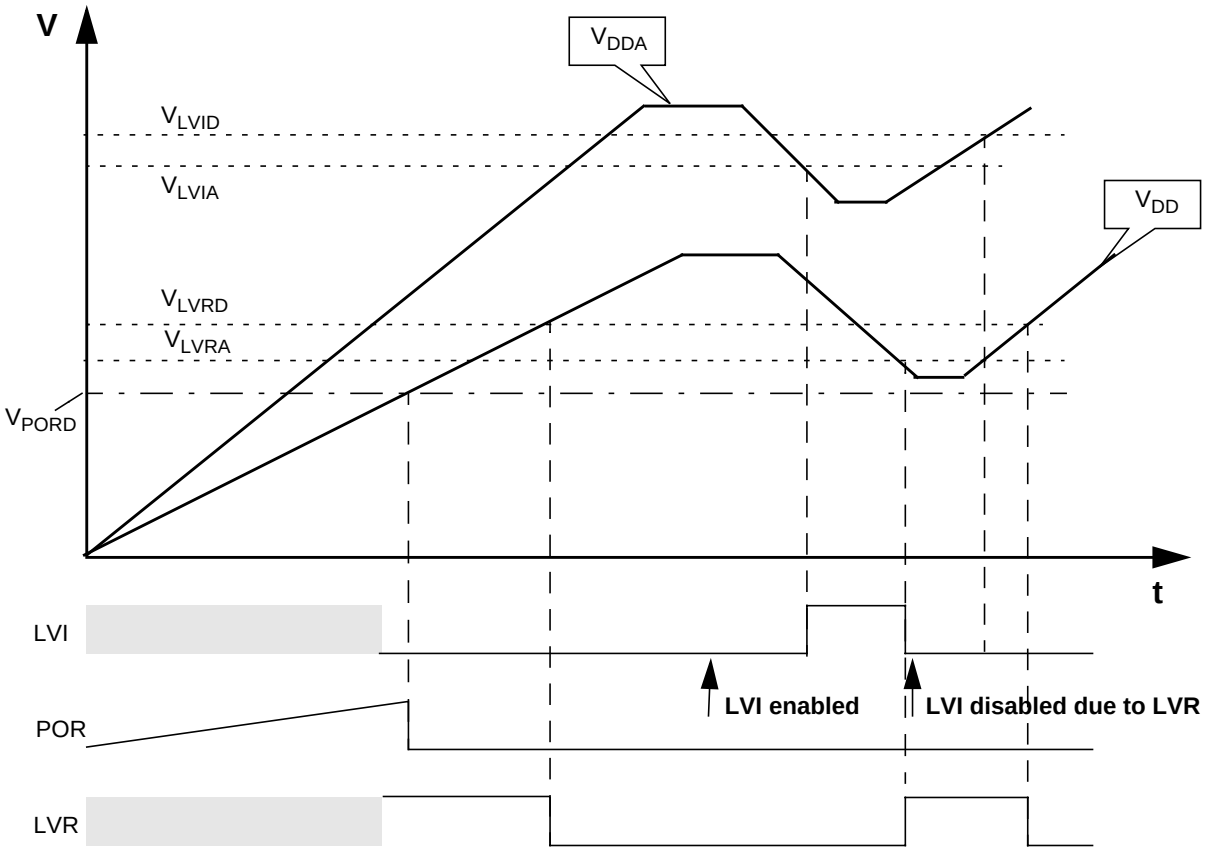

A.4.2 Output Loads

A.4.2.1 Resistive Loads

On-chip voltage regulator MC9S12XDP512 intended to supply the internal logic and oscillator circuits allows no external DC loads.

A.4.2.2 Capacitive Loads

The capacitive loads are specified in Table A-20.. Ceramic capacitors with X7R dielectricum are required.

Table A-20. MC9S12XDP512 - Capacitive Loads

Num	Characteristic	Symbol	Min	Recommended	Max	Unit
1	VDD external capacitive load	C_{DDext}	400	440	12000	nF
2	VDDPLL external capacitive load	$C_{DDPLLext}$	90	220	5000	nF

A.5 Reset, Oscillator, and PLL

This section summarizes the electrical characteristics of the various startup scenarios for oscillator and phase-locked loop (PLL).

A.5.1 Startup

Table A-21 summarizes several startup characteristics explained in this section. Detailed description of the startup behavior can be found in the Clock and Reset Generator (CRG) Block Guide.

Table A-21. Startup Characteristics

Conditions are shown in Table A-4unless otherwise noted							
Num	**C**	**Rating**	**Symbol**	**Min**	**Typ**	**Max**	**Unit**
1	D	Reset input pulse width, minimum input time	PW_{RSTL}	2	—	—	t_{osc}
2	D	Startup from reset	n_{RST}	192	—	196	n_{osc}
3	D	Interrupt pulse width, $\overline{IRQ}$ edge-sensitive mode	PW_{IRQ}	25[1]	—	—	ns
4	D	Wait recovery startup time	t_{WRS}	—	—	14	t_{cyc}
5	D	Fast wakeup from STOP[2]	t_{fws}	—	50	—	µs

[1] 1 t_{cycle} at 40Mhz Bus Clock

[2] V_{DD1}/V_{DD2} filter capacitors 220 nF, V_{DD35} = 5 V, T= 25°C

A.5.1.1 POR

The release level V_{PORR} and the assert level V_{PORA} are derived from the V_{DD} supply. They are also valid if the device is powered externally. After releasing the POR reset the oscillator and the clock quality check are started. If after a time t_{CQOUT} no valid oscillation is detected, the MCU will start using the internal self clock. The fastest startup time possible is given by n_{uposc}.

A.5.1.2 SRAM Data Retention

Provided an appropriate external reset signal is applied to the MCU, preventing the CPU from executing code when V_{DD35} is out of specification limits, the SRAM contents integrity is guaranteed if after the reset the PORF bit in the CRG flags register has not been set.

A.5.1.3 External Reset

When external reset is asserted for a time greater than PW_{RSTL} the CRG module generates an internal reset, and the CPU starts fetching the reset vector without doing a clock quality check, if there was an oscillation before reset.

A.5.1.4 Stop Recovery

Out of stop the controller can be woken up by an external interrupt. A clock quality check as after POR is performed before releasing the clocks to the system.

If the MCU is woken-up by an interrupt and the fast wake-up feature is enabled (FSTWKP = 1 and SCME = 1), the system will resume operation in self-clock mode after t_{fws}.

A.5.1.5 Pseudo Stop and Wait Recovery

The recovery from pseudo stop and wait are essentially the same since the oscillator was not stopped in both modes. The controller can be woken up by internal or external interrupts. After t_{wrs} the CPU starts fetching the interrupt vector.

A.5.2 Oscillator

The device features an internal low-power loop controlled Pierce oscillator and a full swing Pierce oscillator/external clock mode. The selection of loop controlled Pierce oscillator or full swing Pierce oscillator/external clock depends on the $\overline{XCLKS}$ signal which is sampled during reset. Before asserting the oscillator to the internal system clocks the quality of the oscillation is checked for each start from either power-on, STOP or oscillator fail. t_{CQOUT} specifies the maximum time before switching to the internal self clock mode after POR or STOP if a proper oscillation is not detected. The quality check also determines the minimum oscillator start-up time t_{UPOSC}. The device also features a clock monitor. A clock monitor failure is asserted if the frequency of the incoming clock signal is below the assert frequency $f_{CMFA.}$

Table A-22. Oscillator Characteristics

Conditions are shown in Table A-4 unless otherwise noted							
Num	**C**	**Rating**	**Symbol**	**Min**	**Typ**	**Max**	**Unit**
1a	C	Crystal oscillator range (loop controlled Pierce)	f_{OSC}	4.0	—	16	MHz
1b	C	Crystal oscillator range (full swing Pierce)[1, 2]	f_{OSC}	0.5	—	40	MHz
2	P	Startup current	i_{OSC}	100	—	—	µA
3	C	Oscillator start-up time (loop controlled Pierce)	t_{UPOSC}	—	—[3]	50[4]	ms
4	D	Clock quality check time-out	t_{CQOUT}	0.45		2.5	s
5	P	Clock monitor failure assert frequency	f_{CMFA}	50	100	200	KHz
6	P	External square wave input frequency	f_{EXT}	0.5	—	80	MHz
7	D	External square wave pulse width low	t_{EXTL}	5	—	—	ns
8	D	External square wave pulse width high	t_{EXTH}	5	—	—	ns
9	D	External square wave rise time	t_{EXTR}	—	—	1	ns
10	D	External square wave fall time	t_{EXTF}	—	—	1	ns
11	D	Input capacitance (EXTAL, XTAL inputs)	C_{IN}	—	7	—	pF
12	P	EXTAL pin input high voltage[5]	$V_{IH,EXTAL}$	0.75* V_{DDPLL}	—	—	V
	T	EXTAL pin input high voltage[5]	$V_{IH,EXTAL}$	—	—	V_{DDPLL} + 0.3	V
13	P	EXTAL pin input low voltage[5]	$V_{IL,EXTAL}$	—	—	0.25* V_{DDPLL}	V
	T	EXTAL pin input low voltage[5]	$V_{IL,EXTAL}$	V_{SSPLL} − 0.3	—	—	V
14	C	EXTAL pin input hysteresis[5]	$V_{HYS,EXTAL}$	—	250	—	mV

1 Depending on the crystal a damping series resistor might be necessary

2 $\overline{XCLKS}$ = 0

3 f_{osc} = 4 MHz, C = 22 pF.

4 Maximum value is for extreme cases using high Q, low frequency crystals

5 If full swing Pierce oscillator/external clock circuitry is used. ($\overline{XCLKS}$ = 0)

A.5.3 Phase Locked Loop

The oscillator provides the reference clock for the PLL. The PLL´s voltage controlled oscillator (VCO) is also the system clock source in self clock mode.

A.5.3.1 XFC Component Selection

This section describes the selection of the XFC components to achieve a good filter characteristics.

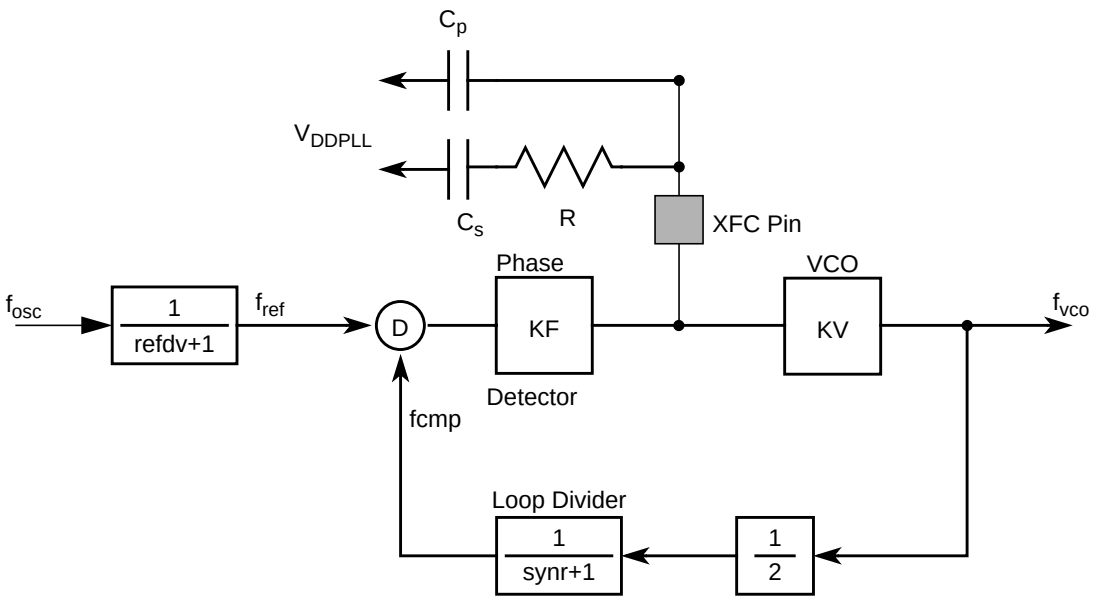

Figure A-3. Basic PLL Functional Diagram

The following procedure can be used to calculate the resistance and capacitance values using typical values for K_1, f_1 and i_{ch} from Table A-23.

The grey boxes show the calculation for f_{VCO} = 80 MHz and f_{ref} = 4 MHz. For example, these frequencies are used for f_{OSC} = 4-MHz and a 40-MHz bus clock.

The VCO gain at the desired VCO frequency is approximated by:

$$K_V = K_1 \cdot e^{\frac{(f_1 - f_{vco})}{K_1 \cdot 1V}} = -195\mathrm{MHz/V} \cdot e^{\frac{126-80}{-195}} = -154.0\mathrm{MHz/V}$$

The phase detector relationship is given by:

$$K_\Phi = -|i_{ch}| \cdot K_V = -3.5\mu A \cdot (-154\mathrm{MHz/V}) = 539.1\mathrm{Hz}/\Omega$$

i_{ch} is the current in tracking mode.

The loop bandwidth f_C should be chosen to fulfill the Gardner's stability criteria by at least a factor of 10, typical values are 50. $\zeta = 0.9$ ensures a good transient response.

$$f_C < \frac{2 \cdot \zeta \cdot f_{ref}}{\pi \cdot \left(\zeta + \sqrt{1 + \zeta^2}\right)} \cdot \frac{1}{10} \rightarrow f_C < \frac{f_{ref}}{4 \cdot 10}; (\zeta = 0.9)$$

$$f_C < 100\text{kHz}$$

And finally the frequency relationship is defined as

$$n = \frac{f_{VCO}}{f_{ref}} = 2 \cdot (\text{synr} + 1) \quad = 20$$

With the above values the resistance can be calculated. The example is shown for a loop bandwidth $f_C = 20$ kHz:

$$R = \frac{2 \cdot \pi \cdot n \cdot f_C}{K_\Phi} = \frac{2 \cdot \pi \cdot 20 \cdot 20\text{kHz}}{(539.1\text{Hz})/\Omega} = 4.7\text{k}\Omega$$

The capacitance C_s can now be calculated as:

$$C_s = \frac{2 \cdot \zeta^2}{\pi \cdot f_C \cdot R} = \frac{0.516}{f_C \cdot R}; (\zeta = 0.9) \quad = 5.5\text{nF} = \sim 4.7\text{nF}$$

The capacitance C_p should be chosen in the range of:

$$\frac{C_s}{20} \leq C_p \leq \frac{C_s}{10} \quad C_P = 470\text{pF}$$

A.5.3.2 Jitter Information

The basic functionality of the PLL is shown in Figure A-3. With each transition of the clock f_{cmp}, the deviation from the reference clock f_{ref} is measured and input voltage to the VCO is adjusted accordingly.The adjustment is done continuously with no abrupt changes in the clock output frequency. Noise, voltage, temperature and other factors cause slight variations in the control loop resulting in a clock jitter. This jitter affects the real minimum and maximum clock periods as illustrated in Figure A-4.

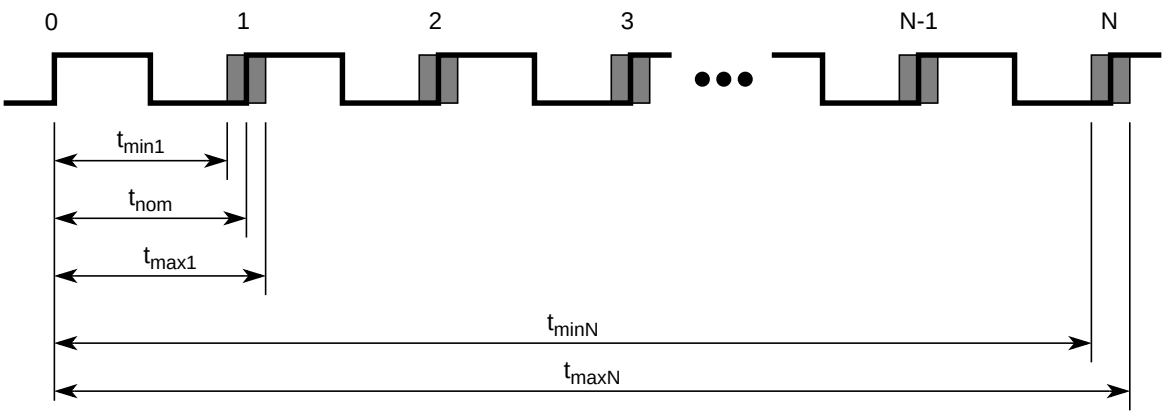

Figure A-4. Jitter Definitions

The relative deviation of t_{nom} is at its maximum for one clock period, and decreases towards zero for larger number of clock periods (N).

Defining the jitter as:

$$J(N) = \max\left(\left|1 - \frac{t_{max}(N)}{N \cdot t_{nom}}\right|, \left|1 - \frac{t_{min}(N)}{N \cdot t_{nom}}\right|\right)$$

For N < 1000, the following equation is a good fit for the maximum jitter:

$$J(N) = \frac{j_1}{\sqrt{N}} + j_2$$

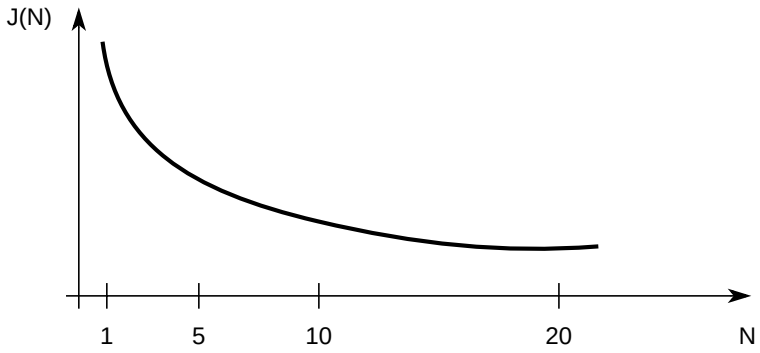

Figure A-5. Maximum Bus Clock Jitter Approximation

This is very important to notice with respect to timers, serial modules where a prescaler will eliminate the effect of the jitter to a large extent.

Table A-23. PLL Characteristics

Conditions are shown in Table A-4 unless otherwise noted							
Num	**C**	**Rating**	**Symbol**	**Min**	**Typ**	**Max**	**Unit**
1	P	Self clock mode frequency	f_{SCM}	1	—	5.5	MHz
2	D	VCO locking range	f_{VCO}	8	—	80	MHz
3	D	Lock detector transition from acquisition to tracking mode	$\|\Delta_{trk}\|$	3	—	4	%[1]
4	D	Lock detection	$\|\Delta_{Lock}\|$	0	—	1.5	%[1]
5	D	Unlock detection	$\|\Delta_{unl}\|$	0.5	—	2.5	%[1]
6	D	Lock detector transition from tracking to acquisition mode	$\|\Delta_{unt}\|$	6	—	8	%[1]
7	C	PLLON total stabilization delay (auto mode)[2]	t_{stab}	—	0.24	—	ms
8	D	PLLON acquisition mode stabilization delay[2]	t_{acq}	—	0.09	—	ms
9	D	PLLON tracking mode stabilization delay[2]	t_{al}	—	0.16	—	ms
10	D	Fitting parameter VCO loop gain	K_1	—	–195	—	MHz/V
11	D	Fitting parameter VCO loop frequency	f_1	—	126	—	MHz
12	D	Charge pump current acquisition mode	$\| i_{ch} \|$	—	38.5	—	µA
13	D	Charge pump current tracking mode	$\| i_{ch} \|$	—	3.5	—	µA
14	C	Jitter fit parameter 1[2]	j_1	—	0.9	1.3	%
15	C	Jitter fit parameter 2[2]	j_2	—	0.02	0.12	%

[1] % deviation from target frequency

[2] f_{osc} = 4 MHz, f_{BUS} = 40 MHz equivalent f_{VCO} = 80 MHz: REFDV = #$00, SYNR = #$09, C_S = 4.7 nF, C_P = 470 pF, R_S = 4.7 kΩ

A.6 MSCAN

Table A-24. MSCAN Wake-up Pulse Characteristics

Conditions are shown in Table A-4 unless otherwise noted							
Num	**C**	**Rating**	**Symbol**	**Min**	**Typ**	**Max**	**Unit**
1	P	MSCAN wakeup dominant pulse filtered	t_{WUP}	—	—	2	µs
2	P	MSCAN wakeup dominant pulse pass	t_{WUP}	5	—	—	µs

A.7 SPI Timing

This section provides electrical parametrics and ratings for the SPI. In Table A-25 the measurement conditions are listed.

Table A-25. Measurement Conditions

Description	Value	Unit
Drive mode	Full drive mode	—
Load capacitance C_{LOAD}[1], on all outputs	50	pF
Thresholds for delay measurement points	(20% / 80%) V_{DDX}	V

[1] Timing specified for equal load on all SPI output pins. Avoid asymmetric load.

A.7.1 Master Mode

In Figure A-6 the timing diagram for master mode with transmission format CPHA = 0 is depicted.

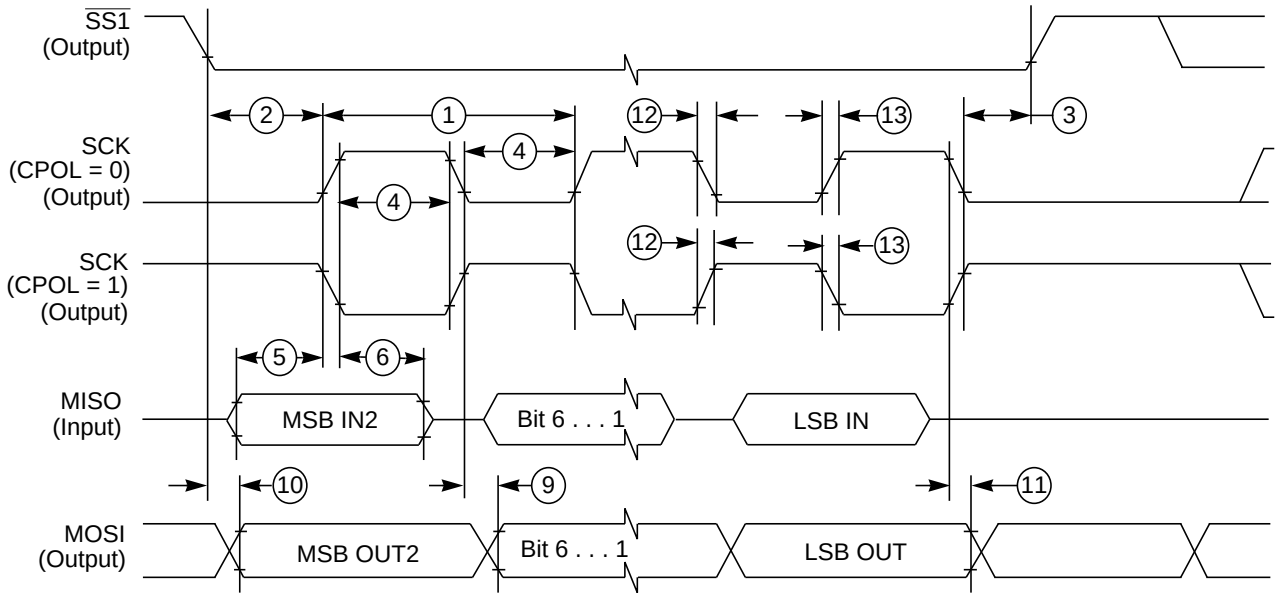

1. If configured as an output.
2. LSBF = 0. For LSBF = 1, bit order is LSB, bit 1, ..., bit 6, MSB.

Figure A-6. SPI Master Timing (CPHA = 0)

In Figure A-7 the timing diagram for master mode with transmission format CPHA=1 is depicted.

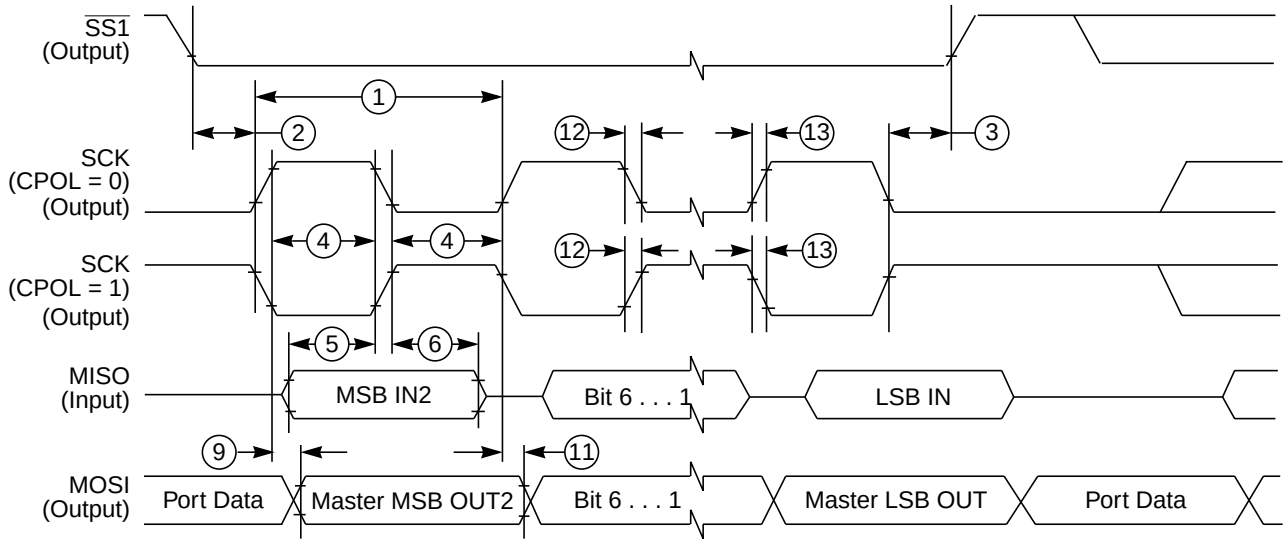

1.If configured as output
2. LSBF = 0. For LSBF = 1, bit order is LSB, bit 1, ..., bit 6, MSB.

Figure A-7. SPI Master Timing (CPHA = 1)

In Table A-26 the timing characteristics for master mode are listed.

Table A-26. SPI Master Mode Timing Characteristics

Num	C	Characteristic	Symbol	Min	Typ	Max	Unit
1	D	SCK frequency	f_{sck}	1/2048	—	1/2	f_{bus}
1	D	SCK period	t_{sck}	2	—	2048	t_{bus}
2	D	Enable lead time	t_{lead}	—	1/2	—	t_{sck}
3	D	Enable lag time	t_{lag}	—	1/2	—	t_{sck}
4	D	Clock (SCK) high or low time	t_{wsck}	—	1/2	—	t_{sck}
5	D	Data setup time (inputs)	t_{su}	8	—	—	ns
6	D	Data hold time (inputs)	t_{hi}	8	—	—	ns
9	D	Data valid after SCK edge	t_{vsck}	—	—	15	ns
10	D	Data valid after $\overline{SS}$ fall (CPHA = 0)	t_{vss}	—	—	15	ns
11	D	Data hold time (outputs)	t_{ho}	0	—	—	ns
12	D	Rise and fall time inputs	t_{rfi}	—	—	8	ns
13	D	Rise and fall time outputs	t_{rfo}	—	—	8	ns

Figure A-8. Derating of maximum f_{SCK} to f_{bus} ratio in Master Mode

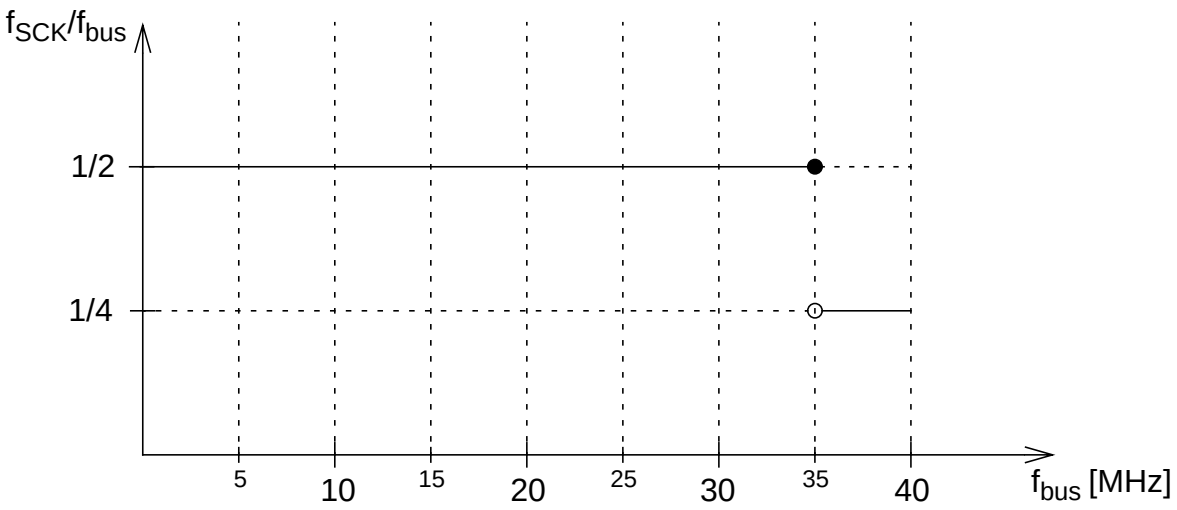

In Master Mode the allowed maximum f_{SCK} to f_{bus} ratio (= minimum Baud Rate Divisor, pls. see SPI Section) derates with increasing f_{bus}.

A.7.2 Slave Mode

In Figure A-9 the timing diagram for slave mode with transmission format CPHA = 0 is depicted.

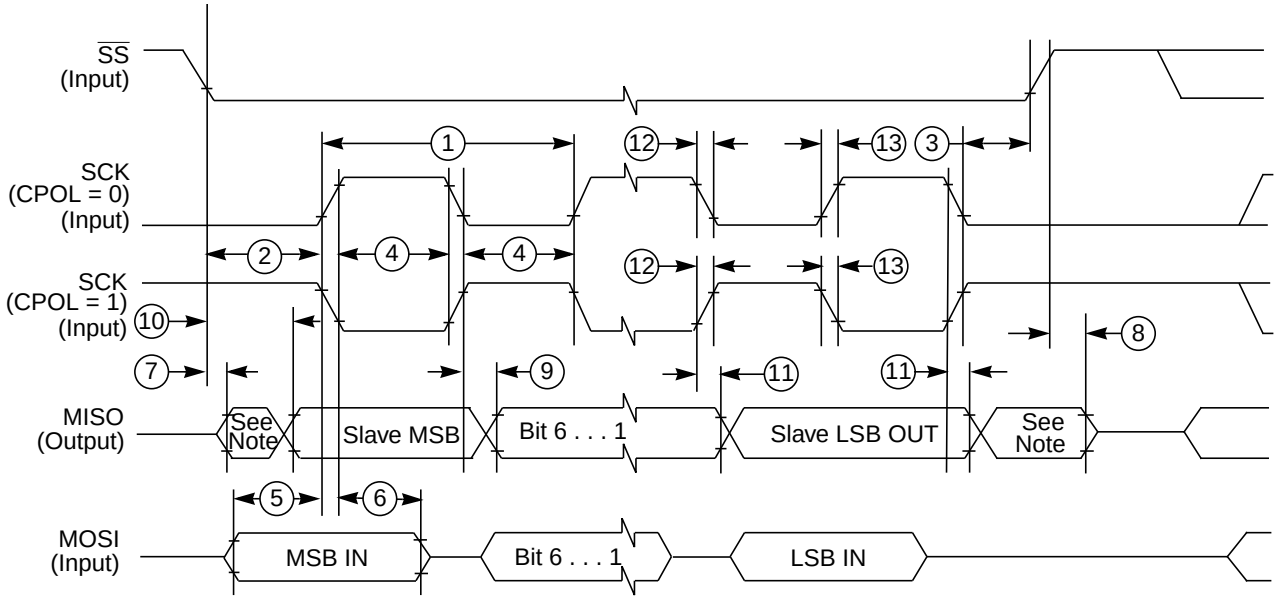

NOTE: Not defined

Figure A-9. SPI Slave Timing (CPHA = 0)

In Figure A-10 the timing diagram for slave mode with transmission format CPHA = 1 is depicted.

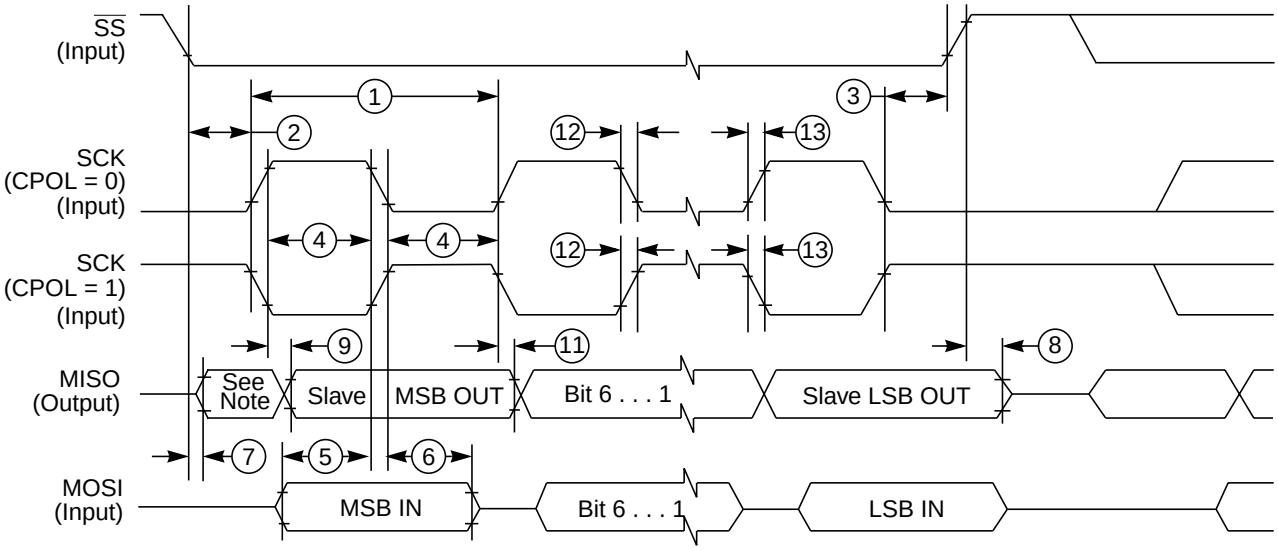

NOTE: Not defined

Figure A-10. SPI Slave Timing (CPHA = 1)

In Table A-27 the timing characteristics for slave mode are listed.

Table A-27. SPI Slave Mode Timing Characteristics

Num	C	Characteristic	Symbol	Min	Typ	Max	Unit
1	D	SCK frequency	f_{sck}	DC	—	1/4	f_{bus}
1	D	SCK period	t_{sck}	4	—	∞	t_{bus}
2	D	Enable lead time	t_{lead}	4	—	—	t_{bus}
3	D	Enable lag time	t_{lag}	4	—	—	t_{bus}
4	D	Clock (SCK) high or low time	t_{wsck}	4	—	—	t_{bus}
5	D	Data setup time (inputs)	t_{su}	8	—	—	ns
6	D	Data hold time (inputs)	t_{hi}	8	—	—	ns
7	D	Slave access time (time to data active)	t_a	—	—	20	ns
8	D	Slave MISO disable time	t_{dis}	—	—	22	ns
9	D	Data valid after SCK edge	t_{vsck}	—	—	$29 + 0.5 \cdot t_{bus}$[1]	ns
10	D	Data valid after $\overline{SS}$ fall	t_{vss}	—	—	$29 + 0.5 \cdot t_{bus}$[1]	ns
11	D	Data hold time (outputs)	t_{ho}	20	—	—	ns
12	D	Rise and fall time inputs	t_{rfi}	—	—	8	ns
13	D	Rise and fall time outputs	t_{rfo}	—	—	8	ns

[1] 0.5 t_{bus} added due to internal synchronization delay

A.8 External Bus Timing

The following conditions are assumed for all following external bus timing values:

- Crystal input within 45% to 55% duty
- Equal loads of pins
- Pad full drive (reduced drive must be off)

A.8.1 Normal Expanded Mode (External Wait Feature Disabled)

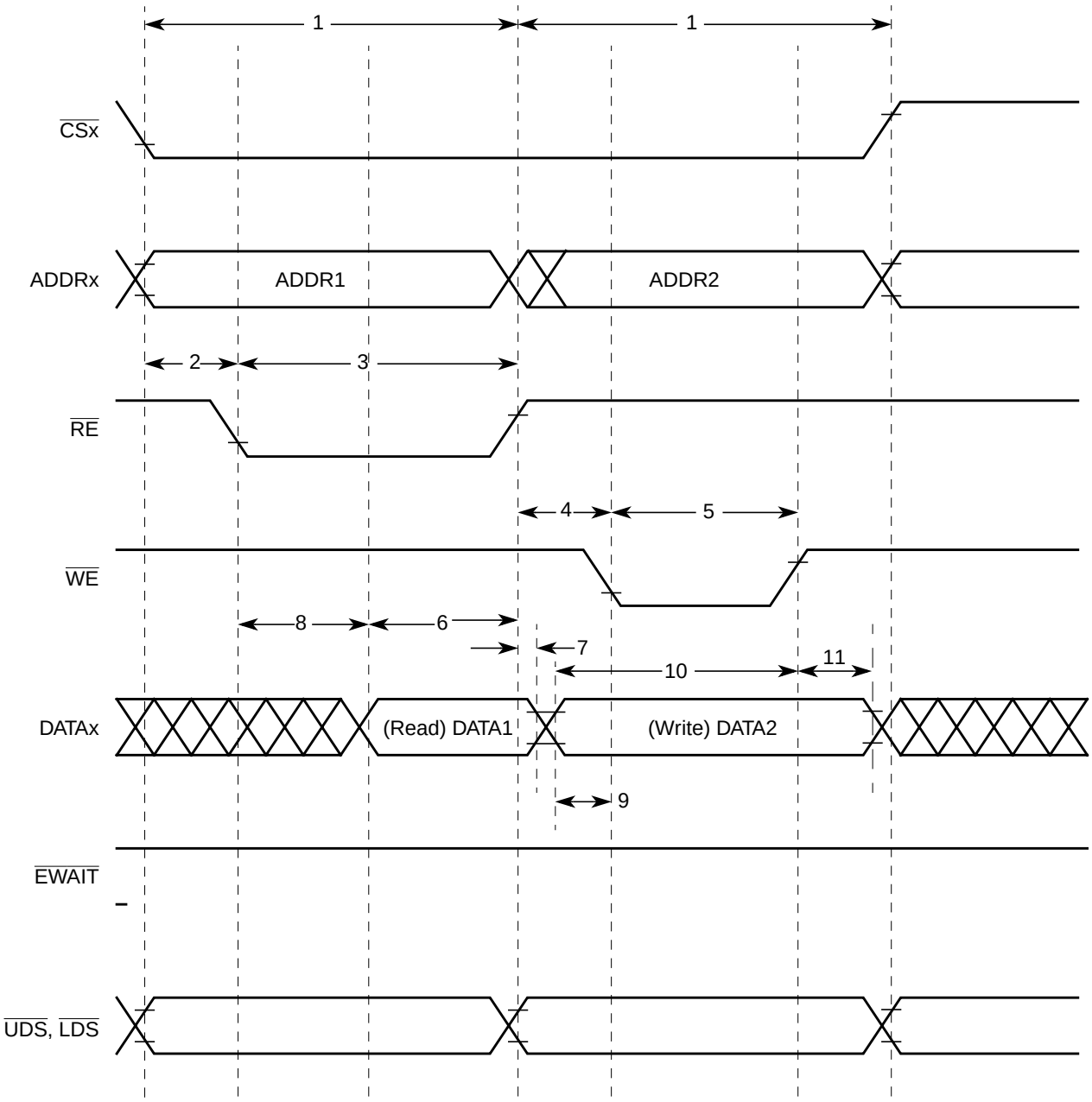

Figure A-11. Example 1a: Normal Expanded Mode — Read Followed by Write

Table A-28. Example 1a: Normal Expanded Mode Timing V_{DD35} = 5.0 V ($\overline{EWAITE}$ = 0)

No.	C	Characteristic	Symbol	Min	Max	Unit
—	—	Frequency of internal bus	f_i	D.C.	40.0	MHz
—	—	Internal cycle time	t_{cyc}	25	∞	ns
—	—	Frequency of external bus	f_o	D.C.	20.0	MHz
1	—	External cycle time (selected by EXSTR)	t_{cyce}	50	∞	ns
2	D	Address[1] valid to $\overline{RE}$ fall	t_{ADRE}	5	—	ns
3	D	Pulse width, $\overline{RE}$	PW_{RE}	35	—	ns
4	D	Address[1] valid to $\overline{WE}$ fall	t_{ADWE}	5	—	ns
5	D	Pulse width, $\overline{WE}$	PW_{WE}	23	—	ns
6	D	Read data setup time (if ITHRS = 0)	t_{DSR}	24	—	ns
	D	Read data setup time (if ITHRS = 1)	t_{DSR}	28	—	ns
7	D	Read data hold time	t_{DHR}	0	—	ns
8	D	Read enable access time	t_{ACCR}	11	—	ns
9	D	Write data valid to $\overline{WE}$ fall	t_{WDWE}	7	—	ns
10	D	Write data setup time	t_{DSW}	31	—	ns
11	D	Write data hold time	t_{DHW}	8	—	ns

[1] Includes the following signals: ADDRx, $\overline{UDS}$, $\overline{LDS}$, and $\overline{CSx}$.

A.8.2 Normal Expanded Mode (External Wait Feature Enabled)

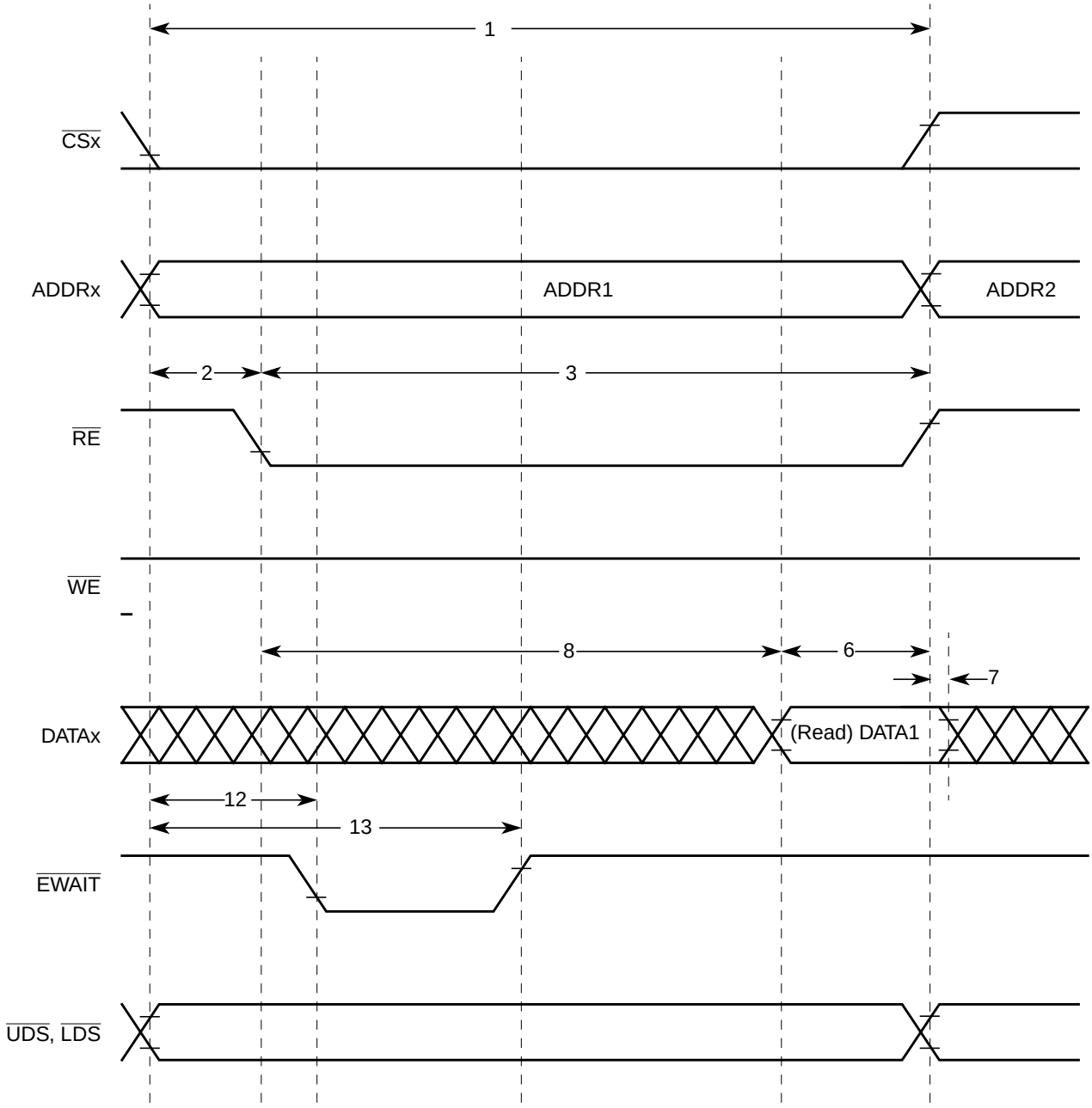

Figure A-12. Example 1b: Normal Expanded Mode — Stretched Read Access

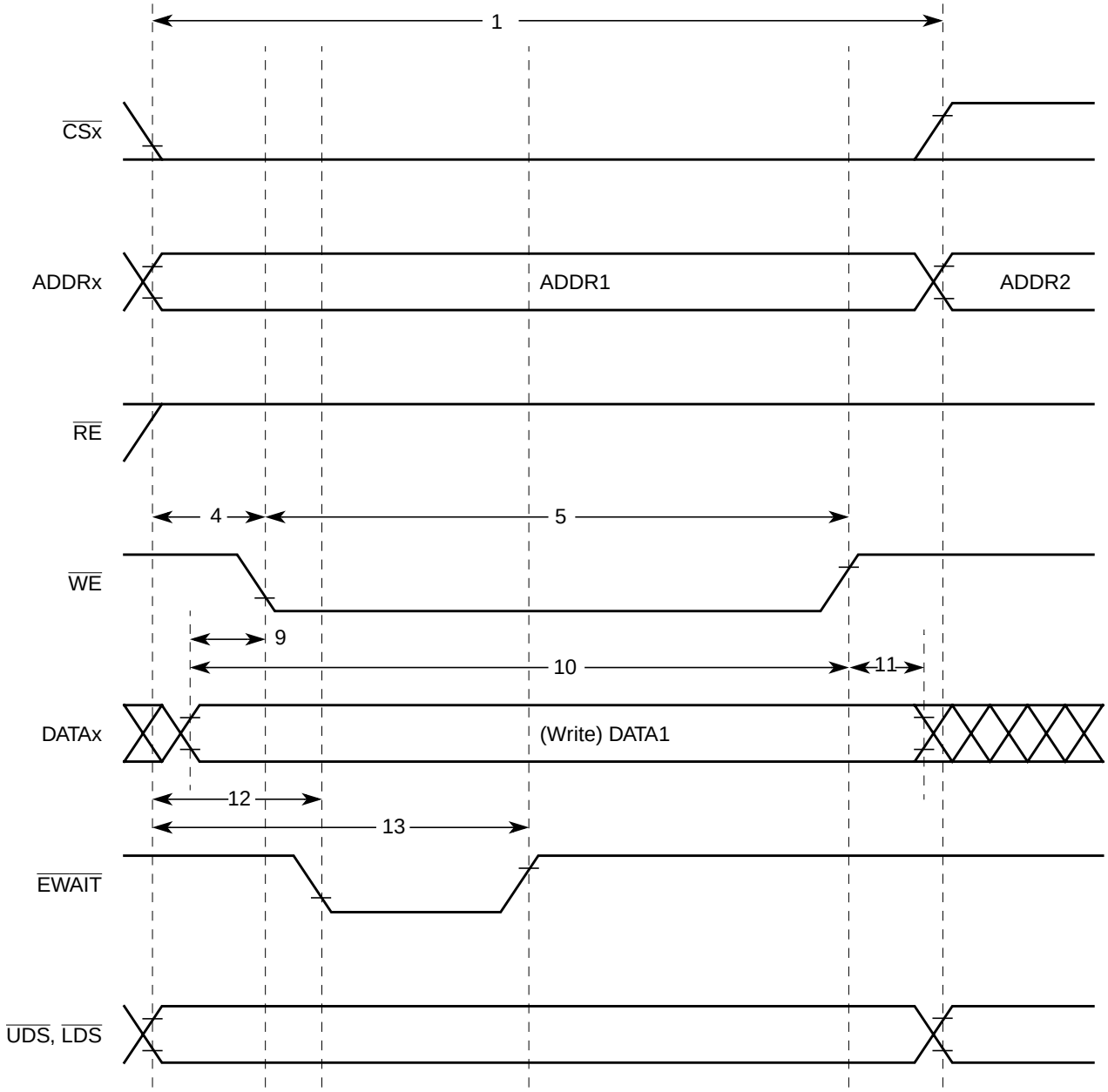

Figure A-13. Example 1b: Normal Expanded Mode — Stretched Write Access

Table A-29. Example 1b: Normal Expanded Mode Timing V_{DD35} = 5.0 V ($\overline{EWAITE}$ = 1)

No.	C	Characteristic	Symbol	2 Stretch Cycles		3 Stretch Cycles		Unit
				Min	Max	Min	Max	
—	—	Frequency of internal bus	f_i	D.C.	40.0	D.C.	40.0	MHz
—	—	Internal cycle time	t_{cyc}	25	∞	25	∞	ns
—	—	Frequency of external bus	f_o	D.C.	13.3	D.C.	10.0	MHz
—	—	External cycle time (selected by EXSTR)	t_{cyce}	75	∞	100	∞	ns
1	—	External cycle time (EXSTR+1EWAIT)	t_{cycew}	100	∞	125	∞	ns
2	D	Address[1] valid to $\overline{RE}$ fall	t_{ADRE}	5	—	5	—	ns
3	D	Pulse width, $\overline{RE}$ [2]	PW_{RE}	85	—	110	—	ns
4	D	Address[1] valid to $\overline{WE}$ fall	t_{ADWE}	5	—	5	—	ns
5	D	Pulse width, $\overline{WE}$[2]	PW_{WE}	73	—	98	—	ns
6	D	Read data setup time (if ITHRS = 0)	t_{DSR}	24	—	24	—	ns
	D	Read data setup time (if ITHRS = 1)	t_{DSR}	28	—	28	—	ns
7	D	Read data hold time	t_{DHR}	0	—	0	—	ns
8	D	Read enable access time	t_{ACCR}	71	—	86	—	ns
9	D	Write data valid to $\overline{WE}$ fall	t_{WDWE}	7	—	7	—	ns
10	D	Write data setup time	t_{DSW}	81	—	106	—	ns
11	D	Write data hold time	t_{DHW}	8	—	8	—	ns
12	D	Address to $\overline{EWAIT}$ fall	t_{ADWF}	0	20	0	45	ns
13	D	Address to $\overline{EWAIT}$ rise	t_{ADWR}	37	47	62	72	ns

1 Includes the following signals: ADDRx, $\overline{UDS}$, $\overline{LDS}$, and $\overline{CSx}$.

2 Affected by $\overline{EWAIT}$.

A.8.3 Emulation Single-Chip Mode (Without Wait States)

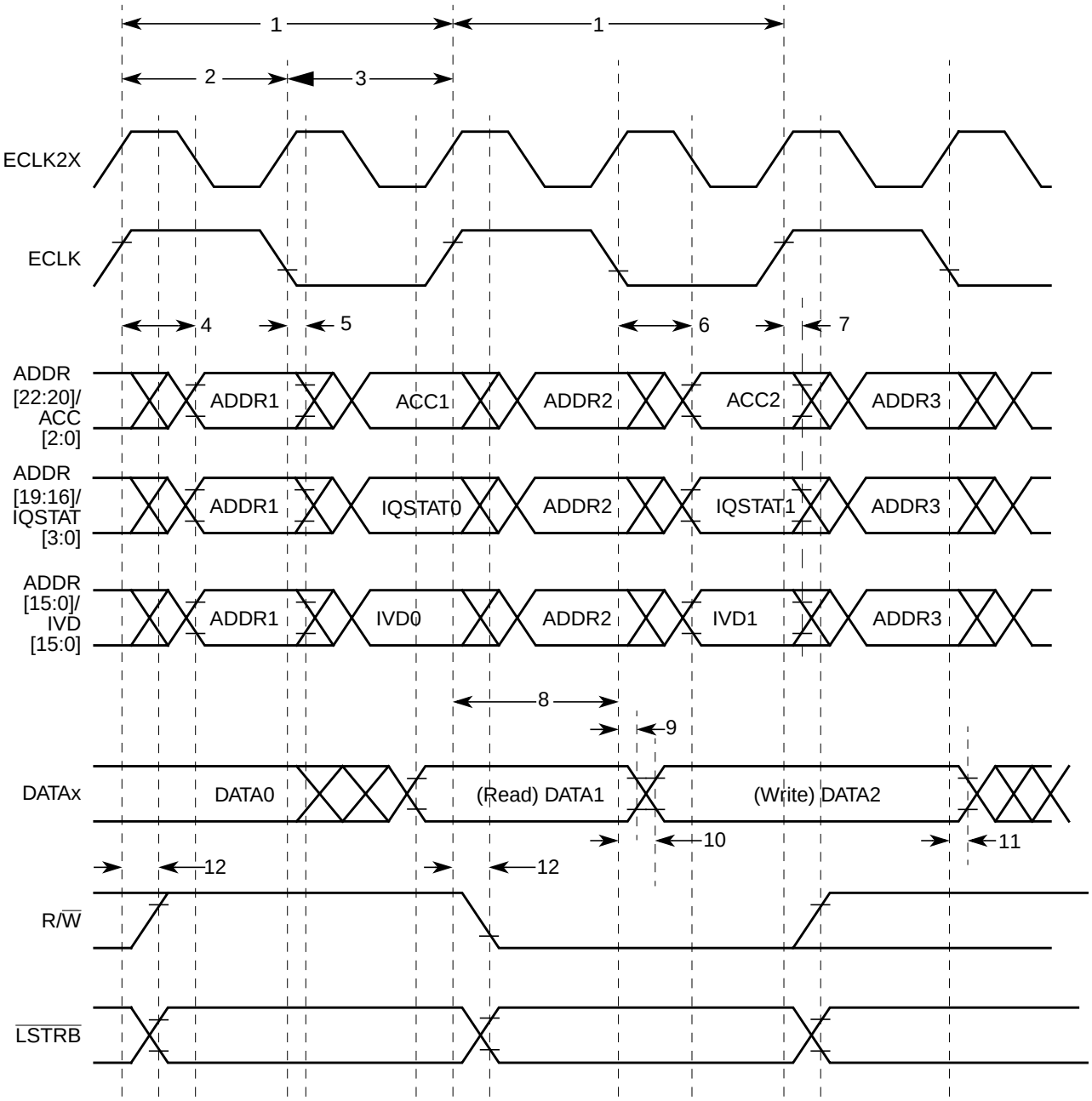

Figure A-14. Example 2a: Emulation Single-Chip Mode — Read Followed by Write

Table A-30. Example 2a: Emulation Single-Chip Mode Timing V_{DD35} = 5.0 V ($\overline{EWAITE}$ = 0)

No.	C	Characteristic[1]	Symbol	Min	Max	Unit
—	—	Frequency of internal bus	f_i	D.C.	40.0	MHz
1	—	Cycle time	t_{cyc}	25	∞	ns
2	D	Pulse width, E high	PW_{EH}	11.5	—	ns
3	D	Pulse width, E low	PW_{EL}	11.5	—	ns
4	D	Address delay time	t_{AD}	—	5	ns
5	D	Address hold time	t_{AH}	0	—	ns
6	D	IVDx delay time[2]	t_{IVDD}	—	4.5	ns
7	D	IVDx hold time[2]	t_{IVDH}	0	—	ns
8	D	Read data setup time (ITHRS = 1 only) Maskset M84E	t_{DSR}	15	—	ns
	D	Read data setup time (ITHRS = 1 only) Maskset L15Y	t_{DSR}	12	—	ns
9	D	Read data hold time	t_{DHR}	0	—	ns
10	D	Write data delay time	t_{DDW}	—	5	ns
11	D	Write data hold time	t_{DHW}	0	—	ns
12	D	Read/write data delay time[3]	t_{RWD}	–1	5	ns

1 Typical supply and silicon, room temperature only

2 Includes also ACCx, IQSTATx

3 Includes $\overline{LSTRB}$

A.8.4 Emulation Expanded Mode (With Optional Access Stretching)

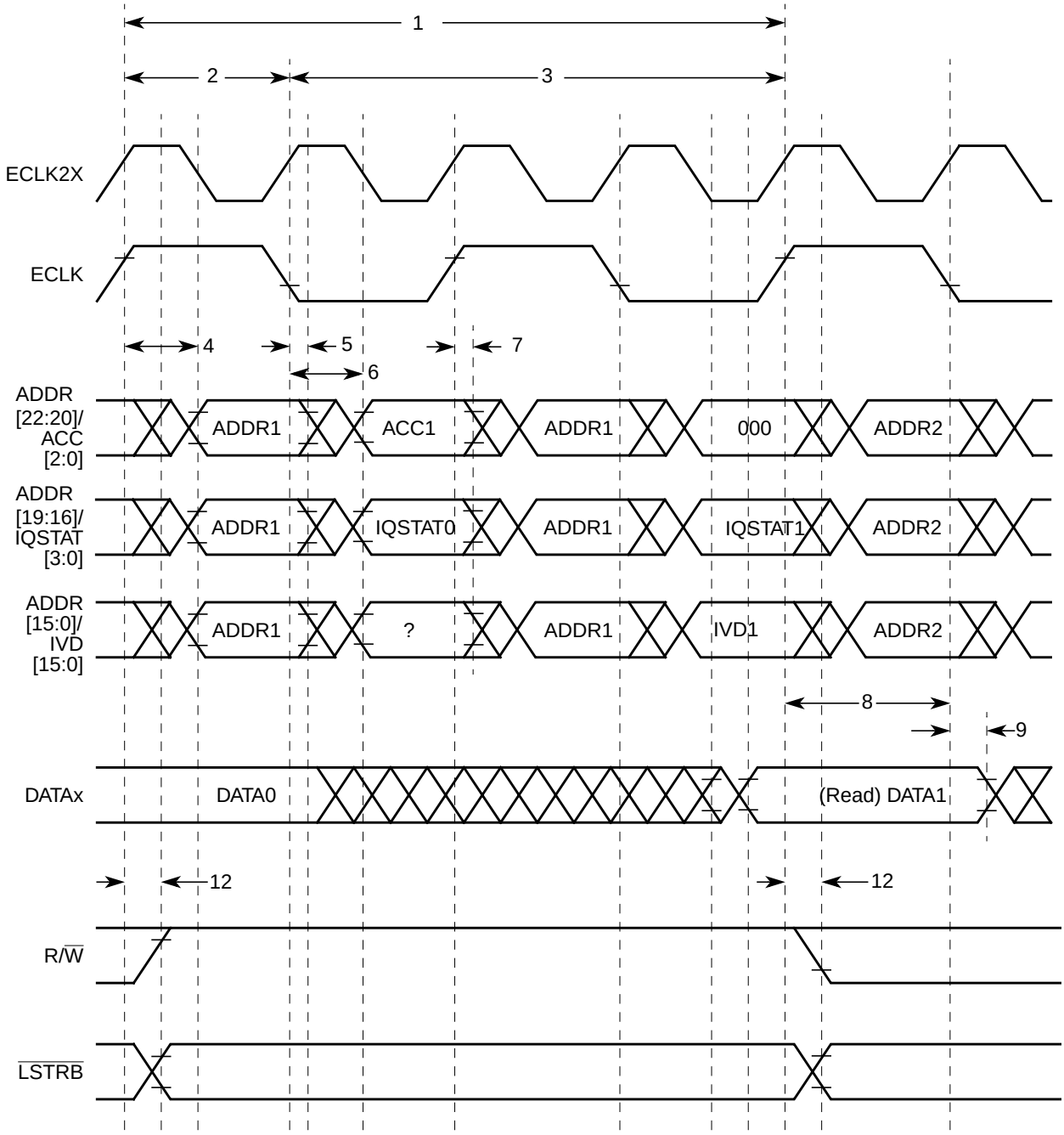

Figure A-15. Example 2b: Emulation Expanded Mode — Read with 1 Stretch Cycle

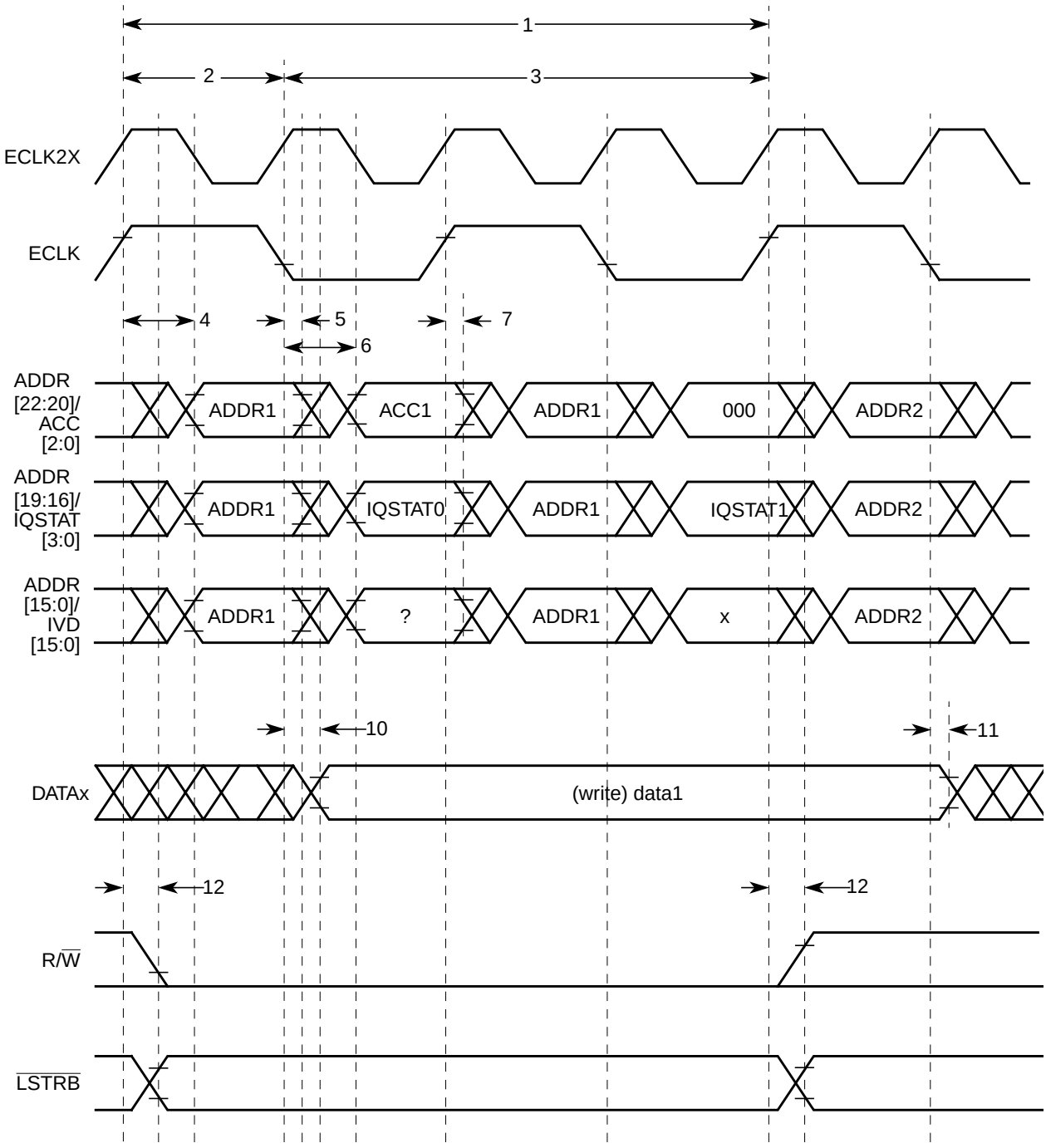

Figure A-16. Example 2b: Emulation Expanded Mode Ò Write with 1 Stretch Cycle

Table A-31. Example 2b: Emulation Expanded Mode Timing V_{DD35} = 5.0 V ($\overline{EWAITE}$ = 0)

No.	C	Characteristic[1]	Symbol	1 Stretch Cycle		2 Stretch Cycles		3 Stretch Cycles		Unit
				Min	Max	Min	Max	Min	Max	
—	—	Internal cycle time	t_{cyc}	25	25	25	25	25	25	ns
1	—	Cycle time	t_{cyce}	50	∞	75	∞	100	∞	ns
2	D	Pulse width, E high	PW_{EH}	11.5	14	11.5	14	11.5	14	ns
3	D	E falling to sampling E rising	t_{EFSR}	35	39.5	60	64.5	85	89.5	ns
4	D	Address delay time	t_{AD}	—	5	—	5	—	5	ns
5	D	Address hold time	t_{AH}	0	—	0	—	0	—	ns
6	D	IVD delay time[2]	t_{IVDD}	—	4.5	—	4.5	—	4.5	ns
7	D	IVD hold time[2]	t_{IVDH}	0	—	0	—	0	—	ns
8	D	Read data setup time Maskset L15Y	t_{DSR}	12	—	12	—	12	—	ns
	D	Read data setup time Maskset M84E	t_{DSR}	15	—	15	—	15	—	ns
9	D	Read data hold time	t_{DHR}	0	—	0	—	0	—	ns
10	D	Write data delay time	t_{DDW}	—	5	—	5	—	5	ns
11	D	Write data hold time	t_{DHW}	0	—	0	—	0	—	ns
12	D	Read/write data delay time[3]	t_{RWD}	–1	5	–1	5	–1	5	ns

1 Typical supply and silicon, room temperature only

2 Includes also ACCx, IQSTATx

3 Includes $\overline{LSTRB}$

A.8.5 External Tag Trigger Timing

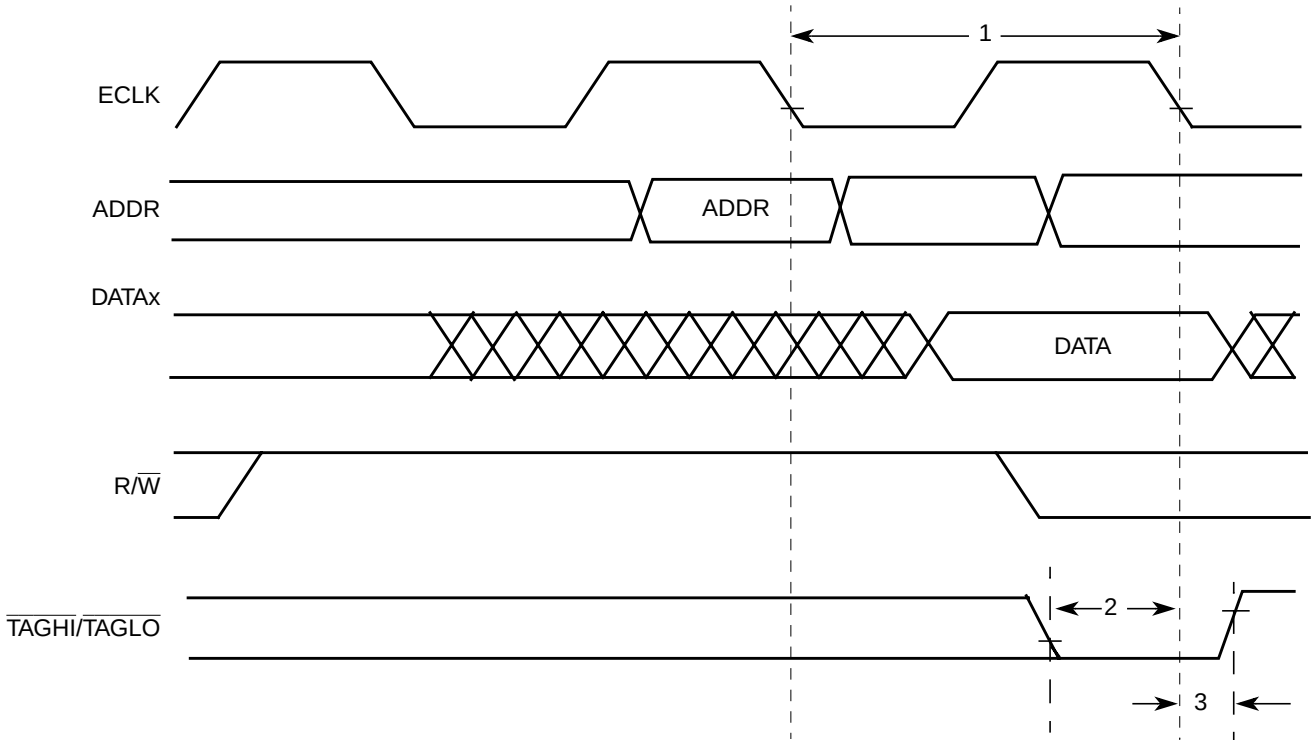

Figure A-17. External Trigger Timing

Table A-32. External Tag Trigger Timing V_{DD35} = 5.0 V

No.	C	Characteristic [1]	Symbol	Min	Max	Unit
1	D	Frequency of internal bus	f_i	D.C.	40.0	MHz
2	D	Cycle time	t_{cyc}	25	∞	ns
3	D	$\overline{TAGHI}/\overline{TAGLO}$ setup time	t_{TS}	11.5	—	ns
4	D	$\overline{TAGHI}/\overline{TAGLO}$ hold time	t_{TH}	0	—	ns

[1] Typical supply and silicon, room temperature only

Appendix B
Package Information

This section provides the physical dimensions of the MC9S12XD Family packages.

B.1 144-Pin LQFP

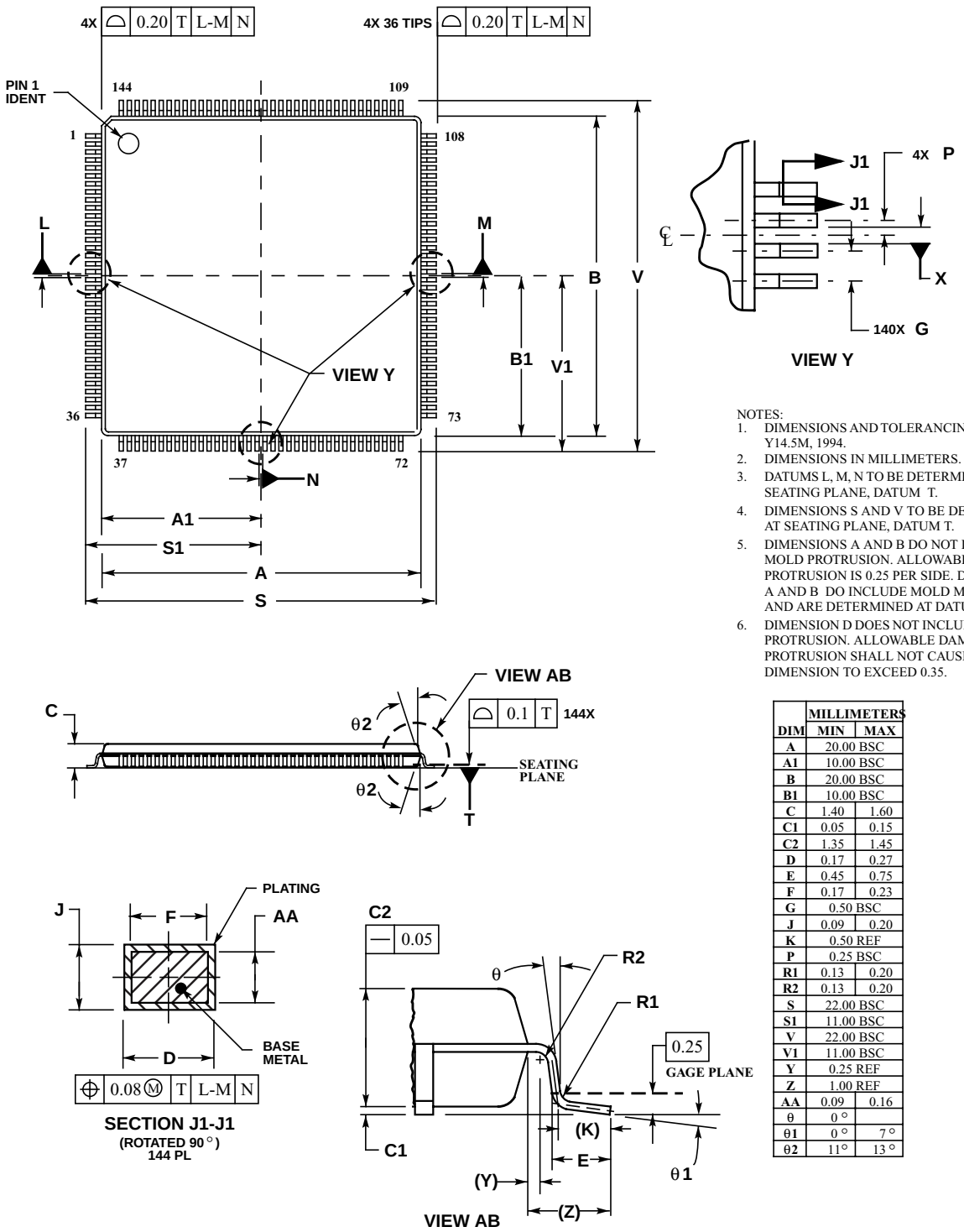

NOTES:
1. DIMENSIONS AND TOLERANCING PER ASME Y14.5M, 1994.
2. DIMENSIONS IN MILLIMETERS.
3. DATUMS L, M, N TO BE DETERMINED AT THE SEATING PLANE, DATUM T.
4. DIMENSIONS S AND V TO BE DETERMINED AT SEATING PLANE, DATUM T.
5. DIMENSIONS A AND B DO NOT INCLUDE MOLD PROTRUSION. ALLOWABLE PROTRUSION IS 0.25 PER SIDE. DIMENSIONS A AND B DO INCLUDE MOLD MISMATCH AND ARE DETERMINED AT DATUM PLANE H.
6. DIMENSION D DOES NOT INCLUDE DAMBAR PROTRUSION. ALLOWABLE DAMBAR PROTRUSION SHALL NOT CAUSE THE D DIMENSION TO EXCEED 0.35.

	MILLIMETERS	
DIM	MIN	MAX
A	20.00 BSC	
A1	10.00 BSC	
B	20.00 BSC	
B1	10.00 BSC	
C	1.40	1.60
C1	0.05	0.15
C2	1.35	1.45
D	0.17	0.27
E	0.45	0.75
F	0.17	0.23
G	0.50 BSC	
J	0.09	0.20
K	0.50 REF	
P	0.25 BSC	
R1	0.13	0.20
R2	0.13	0.20
S	22.00 BSC	
S1	11.00 BSC	
V	22.00 BSC	
V1	11.00 BSC	
Y	0.25 REF	
Z	1.00 REF	
AA	0.09	0.16
θ	0 °	
θ1	0 °	7 °
θ2	11°	13 °

Figure B-1. 144-Pin LQFP Mechanical Dimensions (Case No. 918-03)

B.2 112-Pin LQFP Package

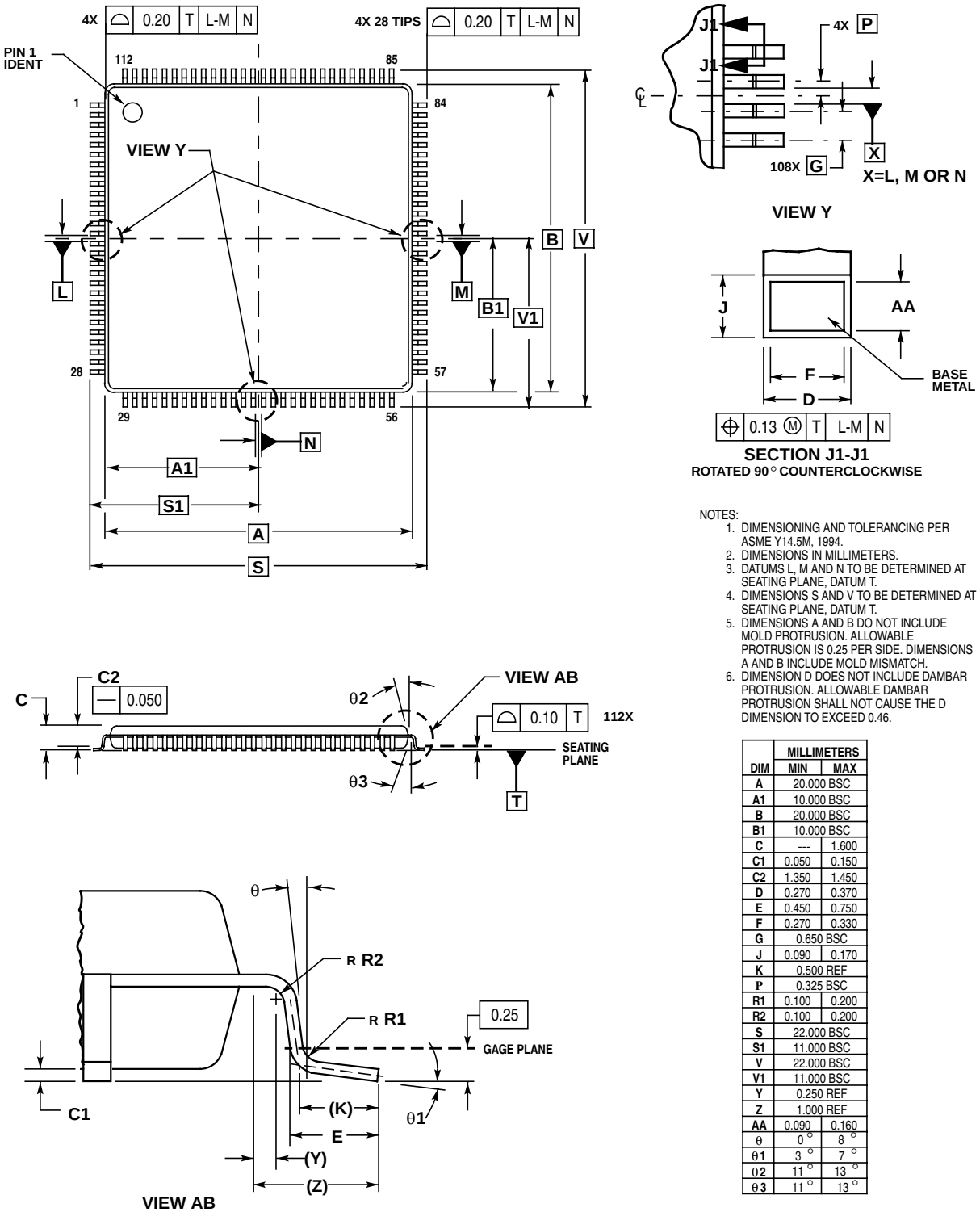

NOTES:
1. DIMENSIONING AND TOLERANCING PER ASME Y14.5M, 1994.
2. DIMENSIONS IN MILLIMETERS.
3. DATUMS L, M AND N TO BE DETERMINED AT SEATING PLANE, DATUM T.
4. DIMENSIONS S AND V TO BE DETERMINED AT SEATING PLANE, DATUM T.
5. DIMENSIONS A AND B DO NOT INCLUDE MOLD PROTRUSION. ALLOWABLE PROTRUSION IS 0.25 PER SIDE. DIMENSIONS A AND B INCLUDE MOLD MISMATCH.
6. DIMENSION D DOES NOT INCLUDE DAMBAR PROTRUSION. ALLOWABLE DAMBAR PROTRUSION SHALL NOT CAUSE THE D DIMENSION TO EXCEED 0.46.

	MILLIMETERS	
DIM	MIN	MAX
A	20.000 BSC	
A1	10.000 BSC	
B	20.000 BSC	
B1	10.000 BSC	
C	---	1.600
C1	0.050	0.150
C2	1.350	1.450
D	0.270	0.370
E	0.450	0.750
F	0.270	0.330
G	0.650 BSC	
J	0.090	0.170
K	0.500 REF	
P	0.325 BSC	
R1	0.100	0.200
R2	0.100	0.200
S	22.000 BSC	
S1	11.000 BSC	
V	22.000 BSC	
V1	11.000 BSC	
Y	0.250 REF	
Z	1.000 REF	
AA	0.090	0.160
θ	0°	8°
θ1	3°	7°
θ2	11°	13°
θ3	11°	13°

Figure B-2. 112-Pin LQFP Mechanical Dimensions (Case No. 987)

B.3 80-Pin QFP Package

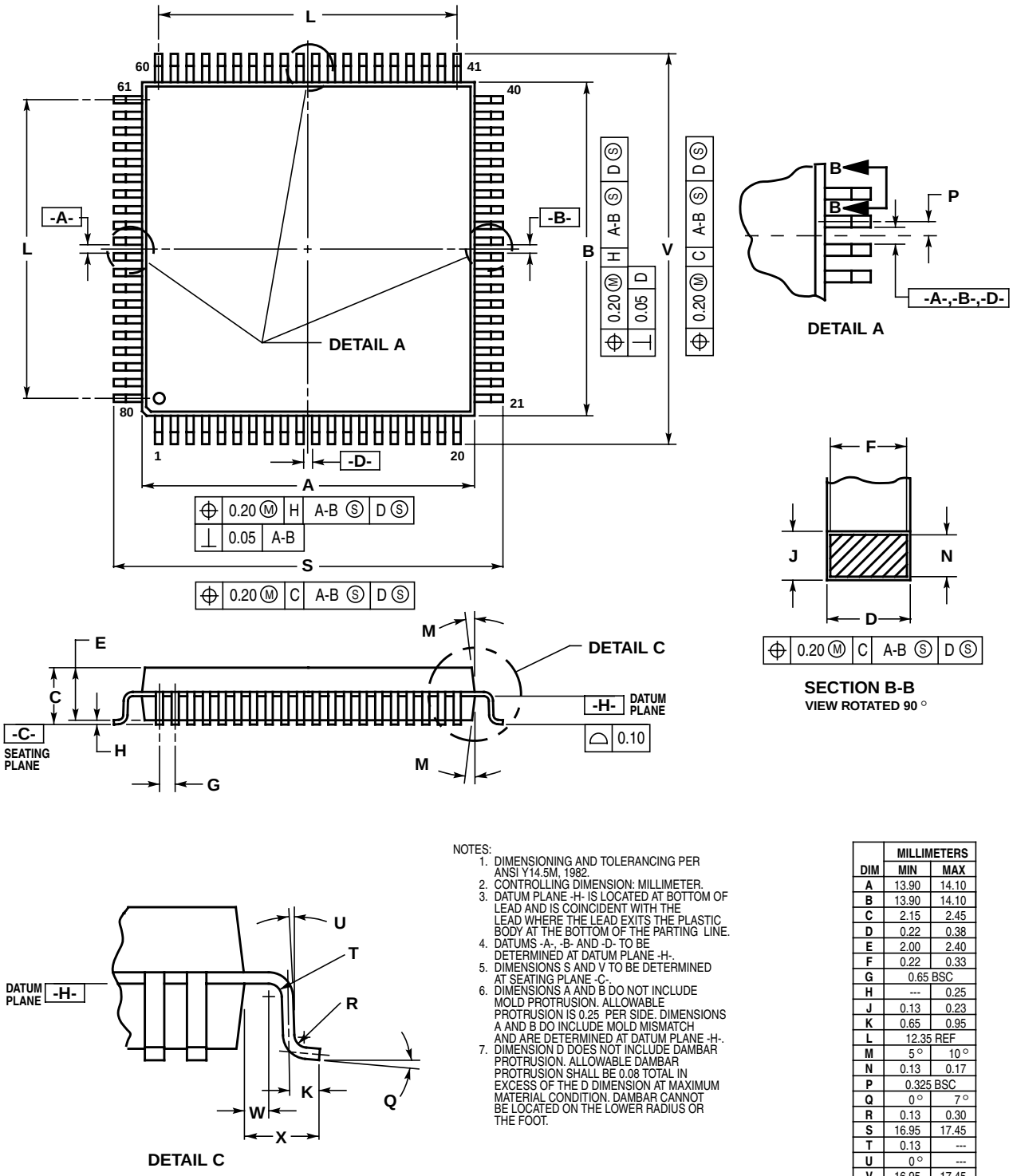

NOTES:
1. DIMENSIONING AND TOLERANCING PER ANSI Y14.5M, 1982.
2. CONTROLLING DIMENSION: MILLIMETER.
3. DATUM PLANE -H- IS LOCATED AT BOTTOM OF LEAD AND IS COINCIDENT WITH THE LEAD WHERE THE LEAD EXITS THE PLASTIC BODY AT THE BOTTOM OF THE PARTING LINE.
4. DATUMS -A-, -B- AND -D- TO BE DETERMINED AT DATUM PLANE -H-.
5. DIMENSIONS S AND V TO BE DETERMINED AT SEATING PLANE -C-.
6. DIMENSIONS A AND B DO NOT INCLUDE MOLD PROTRUSION. ALLOWABLE PROTRUSION IS 0.25 PER SIDE. DIMENSIONS A AND B DO INCLUDE MOLD MISMATCH AND ARE DETERMINED AT DATUM PLANE -H-.
7. DIMENSION D DOES NOT INCLUDE DAMBAR PROTRUSION. ALLOWABLE DAMBAR PROTRUSION SHALL BE 0.08 TOTAL IN EXCESS OF THE D DIMENSION AT MAXIMUM MATERIAL CONDITION. DAMBAR CANNOT BE LOCATED ON THE LOWER RADIUS OR THE FOOT.

	MILLIMETERS	
DIM	MIN	MAX
A	13.90	14.10
B	13.90	14.10
C	2.15	2.45
D	0.22	0.38
E	2.00	2.40
F	0.22	0.33
G	0.65 BSC	
H	---	0.25
J	0.13	0.23
K	0.65	0.95
L	12.35 REF	
M	5°	10°
N	0.13	0.17
P	0.325 BSC	
Q	0°	7°
R	0.13	0.30
S	16.95	17.45
T	0.13	---
U	0°	---
V	16.95	17.45
W	0.35	0.45
X	1.6 REF	

Figure B-3. 80-Pin QFP Mechanical Dimensions (Case No. 841B)

Appendix C
Recommended PCB Layout

The PCB must be carefully laid out to ensure proper operation of the voltage regulator as well as of the MCU itself. The following rules must be observed:

- Every supply pair must be decoupled by a ceramic capacitor connected as near as possible to the corresponding pins (C1–C6).
- Central point of the ground star should be the V_{SSR} pin.
- Use low ohmic low inductance connections between V_{SS1}, V_{SS2}, and V_{SSR}.
- V_{SSPLL} must be directly connected to V_{SSR}.
- Keep traces of V_{SSPLL}, EXTAL, and XTAL as short as possible and occupied board area for C7, C8, and Q1 as small as possible.
- Do not place other signals or supplies underneath area occupied by C7, C8, and Q1 and the connection area to the MCU.
- Central power input should be fed in at the V_{DDA}/V_{SSA} pins.

Table C-1. Recommended Decoupling Capacitor Choice

Component	Purpose	Type	Value
C1	V_{DD1} filter capacitor	Ceramic	220 nF
C2	V_{DD2} filter capacitor	Ceramic X7R	220 nF
C3	V_{DDA} filter capacitor	Ceramic X7R	>=100 nF
C4	V_{DDR} filter capacitor	X7R/tantalum	>=100 nF
C5	V_{DDPLL} filter capacitor	Ceramic X7R	220 nF
C6	V_{DDX} filter capacitor	X7R/tantalum	>=100 nF
C7	OSC load capacitor	Comes from crystal manufacturer	
C8	OSC load capacitor		
C9	PLL loop filter capacitor	See PLL specification chapter	
C10	PLL loop filter capacitor		
C11	V_{DDX} filter capacitor	X7R/tantalum	>=100 nF
C12	V_{DDX} filter capacitor	X7R/tantalum	>=100 nF
R1	PLL loop filter resistor	See PLL specification chapter	
Q1	Quartz	—	—

Figure C-1. 144-Pin LQFP Recommended PCB Layout

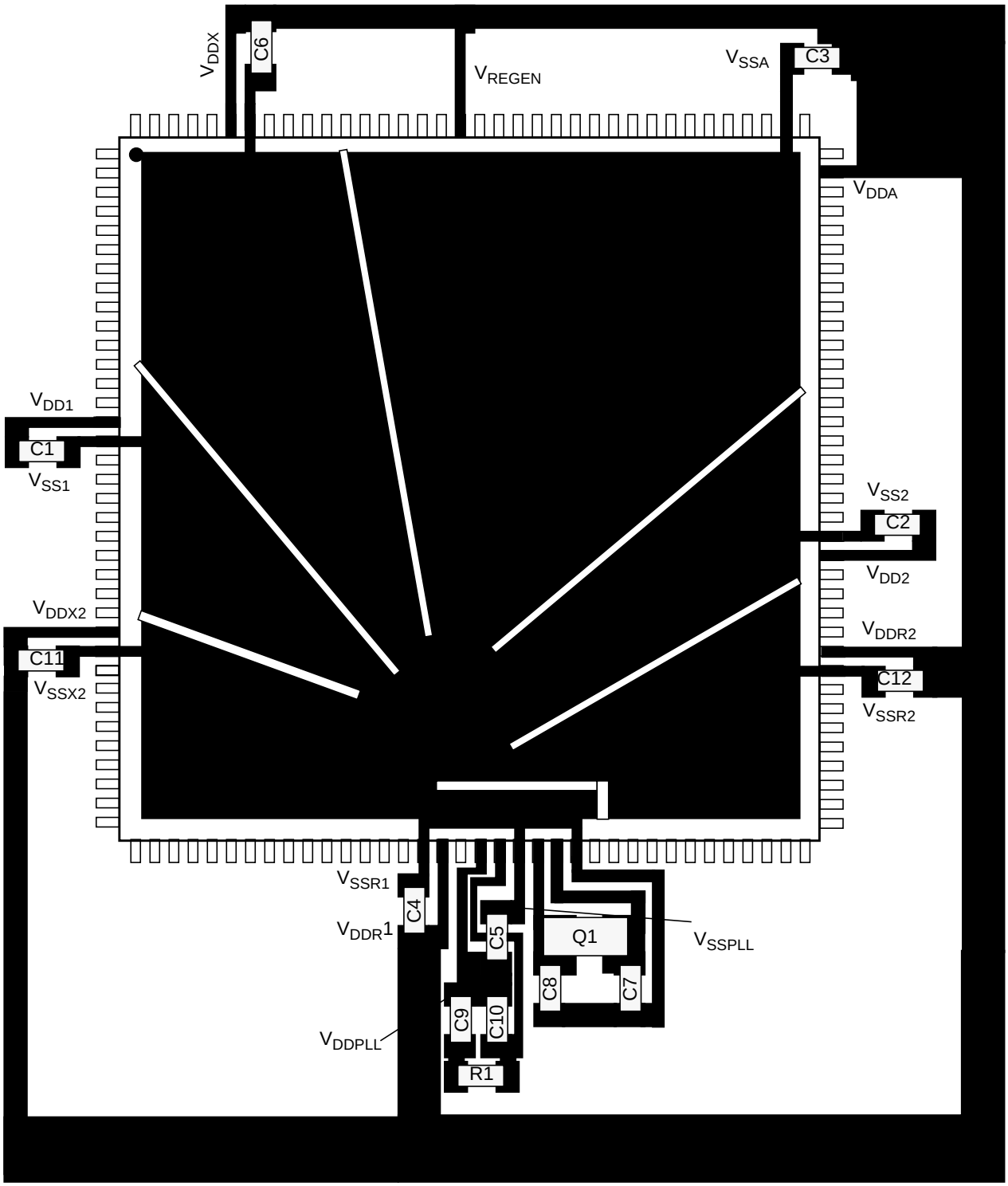

Figure C-2. 112-Pin LQFP Recommended PCB Layout

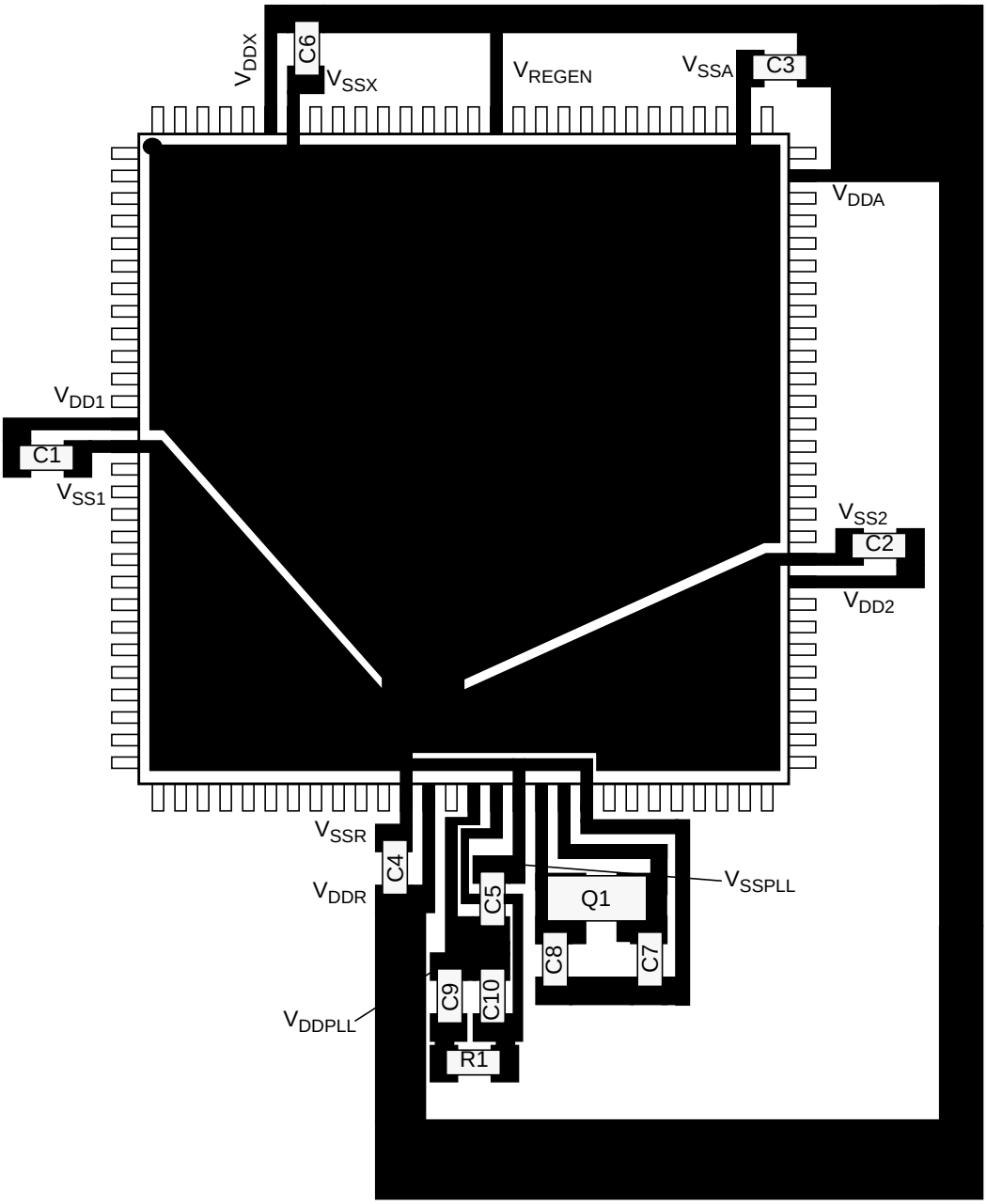

Figure C-3. 80-Pin QFP Recommended PCB Layout

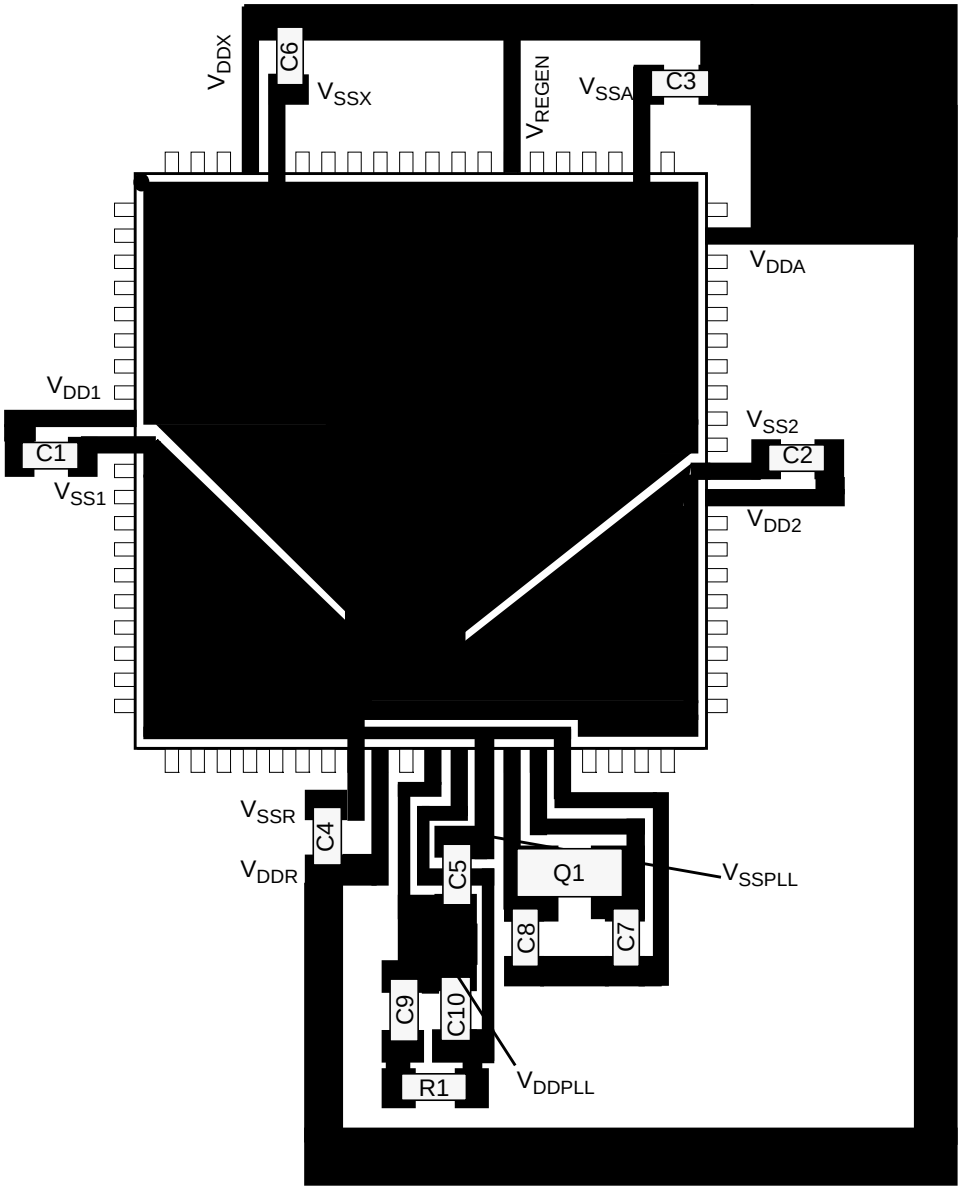

Appendix D
Using L15Y Silicon

The following items should be considerd when using L15Y Silicon:

- Do not write or read to registers which are marked “Reserved” in Table 1-1.
- Fill the interrupt vector locations which are marked “Reserved” in Table 1-12. according to your coding policies for unused interrupts
- L15Y Silicon includes two analog to digital converters ATD0 and ATD1. ATD0 channels 7 to 0 are connected to PAD07 to PAD00 and ATD1 channels 7 to 0 are connected to PAD15 to PAD08.
- L15Y Silicon integrates the S12X_DBG module Version 2. L15Y Silicon integrates the S12X_MMC module Version 2. This Version doesn’t support the following enhancement which is available on S12X_MMC Version 3:
  - S12XCPU and S12XBDM can access MCU resources which are on different target busses at the same time. I.E S12XCPU can access XSRAM and S12XBDM can access Register Space at the same time.

Appendix E
Derivative Differences

E.1 Memory Sizes and Package Options S12XD - Family

<table>
<tr><th>Device</th><th>Package</th><th>Flash</th><th>RAM</th><th>EEPROM</th><th>ROM</th></tr>
<tr><td rowspan="2">9S12XDP512</td><td>144 LQFP</td><td rowspan="6">512K</td><td rowspan="2">32K</td><td rowspan="14">4K</td><td rowspan="14"></td></tr>
<tr><td>112 LQFP</td></tr>
<tr><td rowspan="3">9S12XDT512</td><td>144 LQFP</td><td rowspan="3">20K</td></tr>
<tr><td>112 LQFP</td></tr>
<tr><td>80 QFP</td></tr>
<tr><td rowspan="3">9S12XDT384</td><td>144 LQFP</td><td rowspan="3">384K</td><td rowspan="3">20K</td></tr>
<tr><td>112 LQFP</td></tr>
<tr><td>80 QFP</td></tr>
<tr><td rowspan="3">9S12XDQ256</td><td>144 LQFP</td><td rowspan="8">256K</td><td rowspan="5">16K</td></tr>
<tr><td>112 LQFP</td></tr>
<tr><td>80 QFP</td></tr>
<tr><td rowspan="3">9S12XDT256</td><td>144 LQFP</td></tr>
<tr><td>112 LQFP</td></tr>
<tr><td>80 QFP</td></tr>
<tr><td rowspan="3">9S12XD256</td><td>144 LQFP</td><td rowspan="3">14K</td></tr>
<tr><td>112 LQFP</td></tr>
<tr><td>80 QFP</td></tr>
<tr><td rowspan="3">3S12XDT256</td><td>144 LQFP</td><td rowspan="3"></td><td rowspan="3">16K</td><td rowspan="3"></td><td rowspan="3">256K</td></tr>
<tr><td>112 LQFP</td></tr>
<tr><td>80 QFP</td></tr>
<tr><td rowspan="2">9S12XDG128</td><td>112 LQFP</td><td rowspan="2">128K</td><td rowspan="4">12K</td><td rowspan="2">2K</td><td rowspan="2"></td></tr>
<tr><td>80 QFP</td></tr>
<tr><td rowspan="2">3S12XDG128</td><td>112 LQFP</td><td rowspan="2"></td><td rowspan="2"></td><td rowspan="2">128K</td></tr>
<tr><td>80 QFP</td></tr>
</table>

Device	Package	Flash	RAM	EEPROM	ROM
9S12XD128	112 LQFP	128K	8K	2K	
	80 QFP				
9S12XD64	80 QFP	64K	4K	1K	

E.2 Memory Sizes and Package Options S12XA & S12XB Family

Table 1 S12XA - Family Memory Sizes

Device	Package	Flash	RAM	EEPROM
9S12XA512	144 LQFP	512K	32K	4K
	112 LQFP			
	80 QFP			
9S12XA256	144 LQFP	256K	16K	
	112 LQFP			
	80 QFP			
9S12XA128	112 LQFP	128K	12K	2K
	80 QFP			

Table 2 S12XB - Family Memory Sizes

Device	Package	Flash	RAM	EEPROM
9S12XB256	112 LQFP	256K	10K	2K
	80 QFP			
9S12XB128	112 LQFP	128K	6K	1K
	80 QFP			

E.3 MC9S12XD-Family Flash Configuration[1 2 3 4 5]

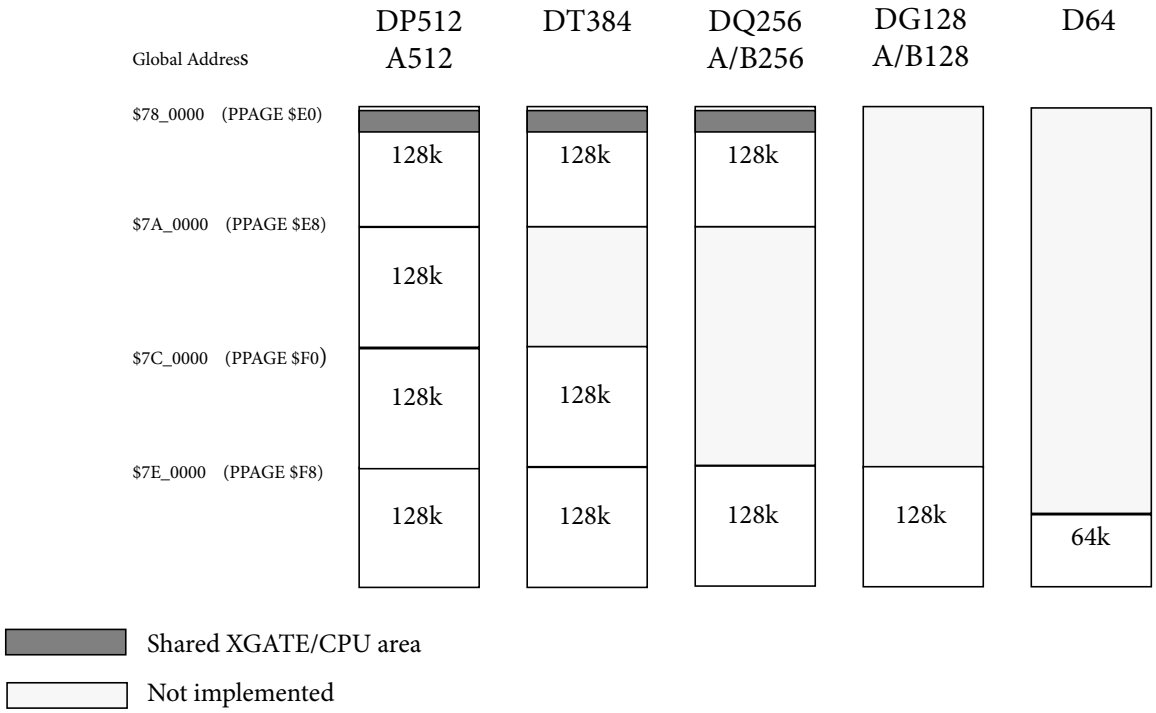

1. XGATE read access to Flash not possible on DG128/D128/A128/B128 and D64
2. Program Pages available on DT384 are $E0 - $E7 and $F0 - $FF
3. Program Pages available on B256/A256/DQ256/DT256/D256 are $E0 - $E7 and $F8 - $FF
4. Shared XGATE/CPU area on A512/DP512/DT512/DT384 at global address $78_0800 to $78_FFFF (30Kbyte)
5. Shared XGATE/CPU area on A256/B256/DT256/DQ256/D256 at global address $78_0800 to $78_FFFF (30Kbyte)

E.4 MC9S12XD/A/B -Family SRAM & EEPROM Configuration

Figure E-1. Available RAM Pages on S12XD-Family[1]

RAM Page RP[7:0]	DP512 A512	DT512 DT384	DQ256 A256	DG128 A128	D128	D64
0xF6						
0xF7						
0xF8	32K Byte					
0xF9						
0xFA						
0xFB		20K Byte				
0xFC			16K Byte			
0xFD				12K Byte		
0xFE					8K Byte	
0xFF						4K Byte

[1] On 9S12XD256 14K byte RAM available pages FF,FE,FD and upper half of page FC
On 9S12XB256 10K byte RAM available pages FF, FE upper half of page FD
On 9S12XB218 6K byte RAM available pages FF and upper half of page FE

Table E-1. Available EEPROM Pages on MC9S12XD-Family

EEPROM Page EP[7:0]	DP512 DT512 DT384 DQ256 A256 A512	DG128 D128 A128 B256	D64 B128
0xFA			
0xFB			
0xFC	4K Byte		
0xFD			
0xFE		2K Byte	
0xFF			1K Byte

E.5 Peripheral Sets S12XD - Family

Device	Package	XGATE	CAN	SCI	SPI	IIC	ECT	PIT	A/D	I/O
9S12XDP512	144LQFP	yes	5	6	3	2	8	4	2/24	119
	112LQFP		5	6	3	1	8	4	2/16	91
9S12XDT512	144LQFP		3	6	3	1	8	4	2/24	119
	112LQFP		3	6	3	1	8	4	2/16	91
	80QFP		3	2	3	1	8	4	1/8	59
9S12XDT384	144LQFP		3	4	3	1	8	4	2/24	119
	112LQFP		3	4	3	1	8	4	2/16	91
	80QFP		3	2	3	1	8	4	1/8	59
9S12XDQ256	144LQFP		4	4	3	1	8	4	2/24	119
	112LQFP		4	4	3	1	8	4	2/16	91
	80QFP		4	2	3	1	8	4	1/8	59
9S12XDT256	144LQFP		3	4	3	1	8	4	2/24	119
	112LQFP		3	4	3	1	8	4	2/16	91
	80QFP		3	2	3	1	8	4	1/8	59
9S12XD256	144LQFP		1	4	3	1	8	4	2/24	119
	112LQFP		1	4	3	1	8	4	2/16	91
	80QFP		1	2	3	1	8	4	1/8	59
3S12XDT256	144LQFP		3	4	3	1	8	4	2/24	119
	112LQFP		3	4	3	1	8	4	2/16	91
	80QFP		3	2	3	1	8	4	1/8	59
9S12XDG128	112LQFP	yes[1]	2	2	2	1	8	4	1/16[2]	91
	80QFP		2	2	2	1	8	4	1/8	59
3S12XDG128	112LQFP		2	2	2	1	8	4	1/16(2)	91
	80QFP		2	2	2	1	8	4	1/8	59
9S12XD128	112LQFP		1	2	2	1	8	4	1/16(2)	91
	80QFP		1	2	2	1	8	4	1/8	59
9S12XD64	80QFP		1	2	2	1	8	2	1/8	59

[1]Can execute code only from RAM

[2]ATD1 routed to PAD00-15 instead of PAD08-23.

E.6 Peripheral Sets S12XA & S12XB - Family

Device	Package	XGATE	CAN	SCI	SPI	IIC	ECT	PIT	A/D	I/O
9S12XA512	144LQFP	yes	no	6	3	1	8	4	2/24	119
	112LQFP			4	3	1	8	4	2/16	91
	80QFP			2	2	1	8	4	1/8	59
9S12XA256	144LQFP			4	3	1	8	4	2/24	119
	112LQFP			4	3	1	8	4	2/16	91
	80QFP			2	2	1	8	4	1/8	59
9S12XA128	112LQFP	yes[1]		2	2	1	8	2	1/16[2]	91
	80QFP			2	2	1	8	2	1/8	59

[1] Can execute code only from RAM

[2] ATD1 routed to PAD00-15 instead of PAD08-23

Device	Package	XGATE	CAN	SCI	SPI	IIC	ECT	PIT	A/D
9S12XB256	112LQFP	yes[1]	1	2	1	1	8	4	1/16
	80QFP		1	2	1	1	8	4	1/8
9S12XB128	112LQFP		1	2	1	1	8	2	1/16[2]
	80QFP			2	1	1	8	2	1/8

[1] Can execute code only from RAM

[2] ATD1 routed to PAD00-15 instead of PAD08-23

E.7 Pinout explanations:

- A/D is the number of modules/total number of A/D channels.
- I/O is the sum of ports capable to act as digital input or output.

  – 144 Pin Packages:
  Port A = 8, B = 8, C=8, D=8, E = 6 + 2 input only,
  H = 8, J = 7, K = 8, M = 8, P = 8, S = 8, T = 8, PAD = 24
  25 inputs provide Interrupt capability (H =8, P= 8, J = 7, IRQ, XIRQ)

  – 112 Pin Packages:
  Port A = 8, B = 8, E = 6 + 2 input only, H = 8, J = 4, K = 7, M = 8, P = 8, S = 8, T = 8, PAD = 16
  22 inputs provide Interrupt capability (H =8, P= 8, J = 4, IRQ, XIRQ)

  – 80 Pin Packages:
  Port A = 8, B = 8, E = 6 + 2 input only, J = 2, M = 6, P = 7, S = 4, T = 8, PAD = 8
  11 inputs provide Interrupt capability (P= 7, J = 2, IRQ, XIRQ)

- CAN0 can be routed under software control from PM[1:0] to pins PM[3:2] or PM[5:4] or PJ[7:6].
- CAN4 pins are shared between IIC0 pins.
- CAN4 can be routed under software control from PJ[7:6] to pins PM[5:4] or PM[7:6].
- Versions with 4 CAN modules will have CAN0, CAN1, CAN2 and CAN4
- Versions with 3 CAN modules will have CAN0, CAN1 and CAN4.
- Versions with 2 CAN modules will have CAN0 and CAN4.
- Versions with 1 CAN modules will have CAN0
- Versions with 2 SPI modules will have SPI0 and SPI1.
- Versions with 4 SCI modules will have SCI0, SCI1, SCI2 and SCI4.
- Versions with 2 SCI modules will have SCI0 and SCI1.
- Versions with 1 IIC module will have IIC0.
- SPI0 can be routed to either Ports PS[7:4] or PM[5:2].
- SPI1 pins are shared with PWM[3:0]; In 144 and 112-pin versions, SPI1 can be routed under software control to PH[3:0].
- SPI2 pins are shared with PWM[7:4]; In 144 and 112-pin versions, SPI2 can be routed under software control to PH[7:4]. In 80-pin packages, $\overline{SS}$-signal of SPI2 is not bonded out!

Appendix F
Ordering Information

The following figure provides an ordering number example for the devices covered by this data book. There are two options when ordering a device. Customers must choose between ordering either the mask-specific partnumber or the generic / mask-independent partnumber Ordering the mask-specific partnumber enables the customer to specify which particular maskset they will receive whereas FSL will ship the currently preferred maskset against any orders for the generic partnumber. In either case, the marking on the device will always show the generic / mask-independent partnumber and the mask set number. For specific partnumbers, please contact your local sales office. The below figure illustrates a mask-specific ordering number.

Part numbers may be abbreviated: check with manufacturer for exact part number

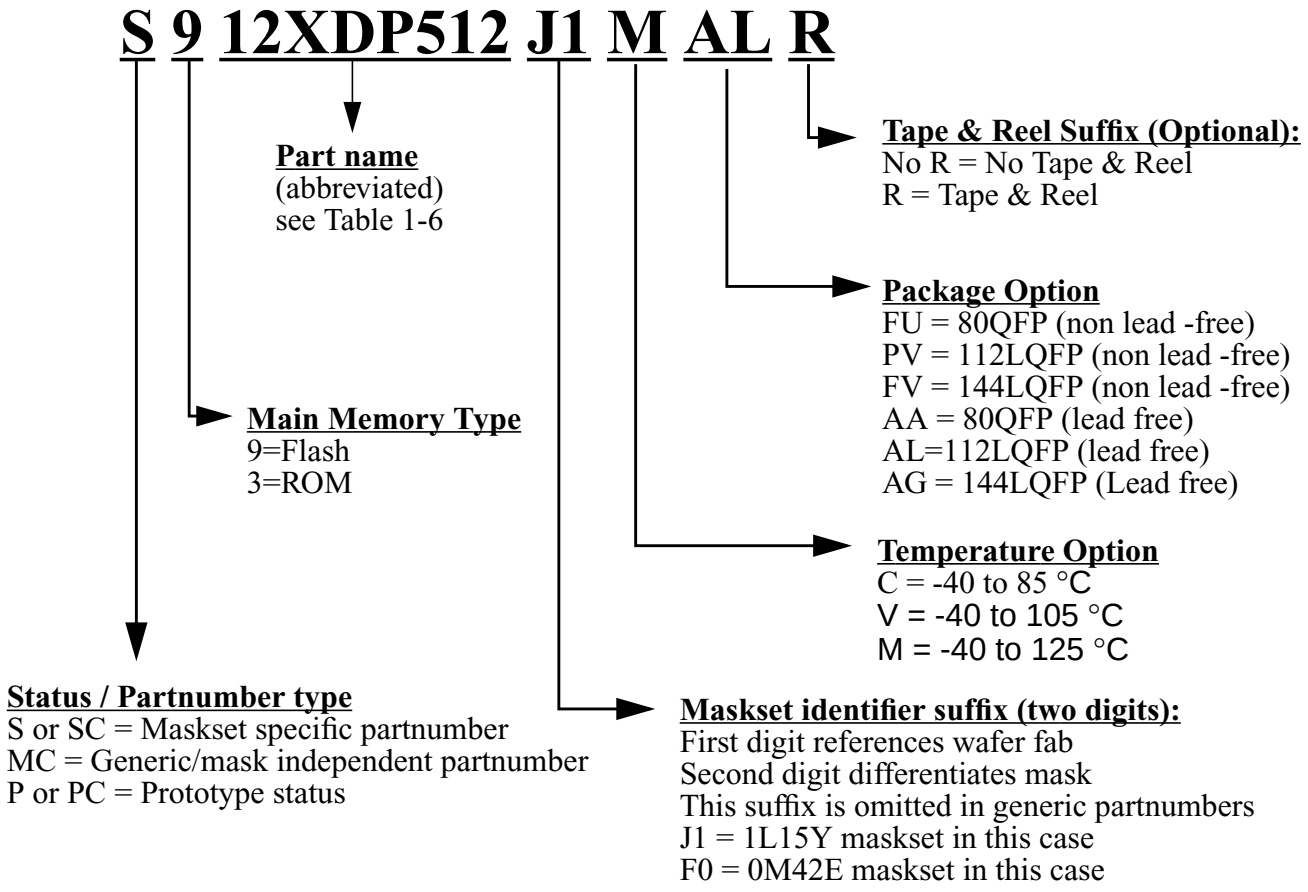

Appendix G
Detailed Register Map

The following tables show the detailed register map of the MC9S12XD-Family.

0x0000–0x0009 Port Integration Module (PIM) Map 1 of 5

Address	Name		Bit 7	Bit 6	Bit 5	Bit 4	Bit 3	Bit 2	Bit 1	Bit 0
0x0000	PORTA	R/W	PA7	PA6	PA5	PA4	PA3	PA2	PA1	PA 0
0x0001	PORTB	R/W	PB7	PB6	PB5	PB4	PB3	PB2	PB1	PB0
0x0002	DDRA	R/W	DDRA7	DDRA6	DDRA5	DDRA4	DDRA3	DDRA2	DDRA1	DDRA0
0x0003	DDRB	R/W	DDRB7	DDRB6	DDRB5	DDRB4	DDRB3	DDRB2	DDRB1	DDRB0
0x0004	PORTC	R/W	PC7	PC6	PC5	PC4	PC3	PC2	PC1	PC0
0x0005	PORTD	R/W	PD7	PD6	PD5	PD4	PD3	PD2	PD1	PD0
0x0006	DDRC	R/W	DDRC7	DDRC6	DDRC5	DDRC4	DDRC3	DDRC2	DDRC1	DDRC0
0x0007	DDRD	R/W	DDRD7	DDRD6	DDRD5	DDRD4	DDRD3	DDRD2	DDRD1	DDRD0
0x0008	PORTE	R	PE7	PE6	PE5	PE4	PE3	PE2	PE1	PE0
		W								
0x0009	DDRE	R	DDRE7	DDRE6	DDRE5	DDRE4	DDRE3	DDRE2	0	0
		W								

0x000A–0x000B Module Mapping Control (S12XMMC) Map 1 of 4

Address	Name		Bit 7	Bit 6	Bit 5	Bit 4	Bit 3	Bit 2	Bit 1	Bit 0
0x000A	MMCCTL0	R	0	0	0	0	0	CS2E	CS1E	CS0E
		W								
0x000B	MODE	R	MODC	MODB	MODA	0	0	0	0	0
		W								

0x000C–0x000D Port Integration Module (PIM) Map 2 of 5

Address	Name		Bit 7	Bit 6	Bit 5	Bit 4	Bit 3	Bit 2	Bit 1	Bit 0
0x000C	PUCR	R	PUPKE	BKPUE	0	PUPEE	PUPDE	PUPCE	PUPBE	PUPAE
		W								
0x000D	RDRIV	R	RDPK	0	0	RDPE	RDPD	RDPC	RDPB	RDPA
		W								

0x000E–0x000F External Bus Interface (S12XEBI) Map

Address	Name		Bit 7	Bit 6	Bit 5	Bit 4	Bit 3	Bit 2	Bit 1	Bit 0
0x000E	EBICTL0	R	ITHRS	0	HDBE	ASIZ4	ASIZ3	ASIZ2	ASIZ1	ASIZ0
		W								
0x000F	EBICTL1	R	EWAITE	0	0	0	0	EXSTR2	EXSTR1	EXSTR0
		W								

0x0010–0x0017 Module Mapping Control (S12XMMC) Map 2 of 4

Address	Name		Bit 7	Bit 6	Bit 5	Bit 4	Bit 3	Bit 2	Bit 1	Bit 0
0x0010	GPAGE	R	0	GP6	GP5	GP4	GP3	GP2	GP1	GP0
		W								
0x0011	DIRECT	R	DP15	DP14	DP13	DP12	DP11	DP10	DP9	DP8
		W								
0x0012	Reserved	R	0	0	0	0	0	0	0	0
		W								
0x0013	MMCCTL1	R	0	0	0	0	0	EROMON	ROMHM	ROMON
		W								
0x0014	Reserved	R	0	0	0	0	0	0	0	0
		W								
0x0015	Reserved	R	0	0	0	0	0	0	0	0
		W								
0x0016	RPAGE	R	RP7	RP6	RP5	RP4	RP3	RP2	RP1	RP0
		W								
0x0017	EPAGE	R	EP7	EP6	EP5	EP4	EP3	EP2	EP1	EP0
		W								

0x0018–0x001B Miscellaneous Peripheral

Address	Name		Bit 7	Bit 6	Bit 5	Bit 4	Bit 3	Bit 2	Bit 1	Bit 0
0x0018	Reserved	R	0	0	0	0	0	0	0	0
		W								
0x0019	Reserved	R	0	0	0	0	0	0	0	0
		W								
0x001A	PARTIDH	R	1	1	0	0	0	1	0	0
		W								
0x001B	PARTIDL	R	0	0	0	0	0	0	0	0
		W								

0x001C–0x001F Port Integration Module (PIM) Map 3 of 5

Address	Name		Bit 7	Bit 6	Bit 5	Bit 4	Bit 3	Bit 2	Bit 1	Bit 0
0x001C	ECLKCTL	R	NECLK	NCLKX2	0	0	0	0	EDIV1	EDIV0
		W								

0x001C–0x001F Port Integration Module (PIM) Map 3 of 5

Address	Name		Bit 7	Bit 6	Bit 5	Bit 4	Bit 3	Bit 2	Bit 1	Bit 0
0x001D	Reserved	R	0	0	0	0	0	0	0	0
		W								
0x001E	IRQCR	R	IRQE	IRQEN	0	0	0	0	0	0
		W								
0x001F	Reserved	R	0	0	0	0	0	0	0	0
		W								

0x0020–0x0027 Debug Module (S12XDBG) Map

Address	Name		Bit 7	Bit 6	Bit 5	Bit 4	Bit 3	Bit 2	Bit 1	Bit 0
0x0020	DBGC1	R	ARM	0	XGSBPE	BDM	DBGBRK		COMRV	
		W		TRIG						
0x0021	DBGSR	R	TBF	EXTF	0	0	0	SSF2	SSF1	SSF0
		W								
0x0022	DBGTCR	R	TSOURCE		TRANGE		TRCMOD		TALIGN	
		W								
0x0023	DBGC2	R	0	0	0	0	CDCM		ABCM	
		W								
0x0024	DBGTBH	R	Bit 15	Bit 14	Bit 13	Bit 12	Bit 11	Bit 10	Bit 9	Bit 8
		W								
0x0025	DBGTBL	R	Bit 7	Bit 6	Bit 5	Bit 4	Bit 3	Bit 2	Bit 1	Bit 0
		W								
0x0026	DBGCNT	R	0	CNT						
		W								
0x0027	DBGSCRX	R	0	0	0	0	SC3	SC2	SC1	SC0
		W								
0x0028[1]	DBGXCTL (COMPA/C)	R	0	NDB	TAG	BRK	RW	RWE	SRC	COMPE
		W								
0x0028[2]	DBGXCTL (COMPB/D)	R	SZE	SZ	TAG	BRK	RW	RWE	SRC	COMPE
		W								
0x0029	DBGXAH	R	0	Bit 22	21	20	19	18	17	Bit 16
		W								
0x002A	DBGXAM	R	Bit 15	14	13	12	11	10	9	Bit 8
		W								
0x002B	DBGXAL	R	Bit 7	6	5	4	3	2	1	Bit 0
		W								
0x002C	DBGXDH	R	Bit 15	14	13	12	11	10	9	Bit 8
		W								
0x002D	DBGXDL	R	Bit 7	6	5	4	3	2	1	Bit 0
		W								
0x002E	DBGXDHM	R	Bit 15	14	13	12	11	10	9	Bit 8
		W								
0x002F	DBGXDLM	R	Bit 7	6	5	4	3	2	1	Bit 0
		W								

[1] This represents the contents if the Comparator A or C control register is blended into this address

[2] This represents the contents if the Comparator B or D control register is blended into this address

0x0030–0x0031 Module Mapping Control (S12XMMC) Map 3 of 4

Address	Name		Bit 7	Bit 6	Bit 5	Bit 4	Bit 3	Bit 2	Bit 1	Bit 0
0x0030	PPAGE	R/W	PIX7	PIX6	PIX5	PIX4	PIX3	PIX2	PIX1	PIX0
0x0031	Reserved	R	0	0	0	0	0	0	0	0
		W								

0x0032–0x0033 Port Integration Module (PIM) Map 4 of 5

Address	Name		Bit 7	Bit 6	Bit 5	Bit 4	Bit 3	Bit 2	Bit 1	Bit 0
0x0032	PORTK	R/W	PK7	PK6	PK5	PK4	PK3	PK2	PK1	PK0
0x0033	DDRK	R/W	DDRK7	DDRK6	DDRK5	DDRK4	DDRK3	DDRK2	DDRK1	DDRK0

0x0034–0x003F Clock and Reset Generator (CRG) Map

Address	Name		Bit 7	Bit 6	Bit 5	Bit 4	Bit 3	Bit 2	Bit 1	Bit 0
0x0034	SYNR	R	0	0	SYN5	SYN4	SYN3	SYN2	SYN1	SYN0
		W								
0x0035	REFDV	R	0	0	REFDV5	REFDV4	REFDV3	REFDV2	REFDV1	REFDV0
		W								
0x0036	CTFLG	R	0	0	0	0	0	0	0	0
		W	Reserved For Factory Test							
0x0037	CRGFLG	R	RTIF	PORF	LVRF	LOCKIF	LOCK	TRACK	SCMIF	SCM
		W								
0x0038	CRGINT	R	RTIE	ILAF	0	LOCKIE	0	0	SCMIE	0
		W								
0x0039	CLKSEL	R	PLLSEL	PSTP	0	0	PLLWAI	0	RTIWAI	COPWAI
		W								
0x003A	PLLCTL	R/W	CME	PLLON	AUTO	ACQ	FSTWKP	PRE	PCE	SCME
0x003B	RTICTL	R/W	RTDEC	RTR6	RTR5	RTR4	RTR3	RTR2	RTR1	RTR0
0x003C	COPCTL	R	WCOP	RSBCK	0	0	0	CR2	CR1	CR0
		W								
0x003D	FORBYP	R	0	0	0	0	0	0	0	0
		W	Reserved For Factory Test							
0x003E	CTCTL	R	0	0	0	0		0	0	0
		W	Reserved For Factory Test							
0x003F	ARMCOP	R	0	0	0	0	0	0	0	0
		W	Bit 7	6	5	4	3	2	1	Bit 0

0x0040–0x007F Enhanced Capture Timer 16-Bit 8-Channels (ECT) Map (Sheet 1 of 3)

Address	Name		Bit 7	Bit 6	Bit 5	Bit 4	Bit 3	Bit 2	Bit 1	Bit 0
0x0040	TIOS	R/W	IOS7	IOS6	IOS5	IOS4	IOS3	IOS2	IOS1	IOS0
0x0041	CFORC	R	0	0	0	0	0	0	0	0
		W	FOC7	FOC6	FOC5	FOC4	FOC3	FOC2	FOC1	FOC0
0x0042	OC7M	R/W	OC7M7	OC7M6	OC7M5	OC7M4	OC7M3	OC7M2	OC7M1	OC7M0
0x0043	OC7D	R/W	OC7D7	OC7D6	OC7D5	OC7D4	OC7D3	OC7D2	OC7D1	OC7D0
0x0044	TCNT (hi)	R	Bit 15	14	13	12	11	10	9	Bit 8
		W								
0x0045	TCNT (lo)	R	Bit 7	6	5	4	3	2	1	Bit 0
		W								
0x0046	TSCR1	R	TEN	TSWAI	TSFRZ	TFFCA	PRNT	0	0	0
		W								
0x0047	TTOV	R/W	TOV7	TOV6	TOV5	TOV4	TOV3	TOV2	TOV1	TOV0
0x0048	TCTL1	R/W	OM7	OL7	OM6	OL6	OM5	OL5	OM4	OL4
0x0049	TCTL2	R/W	OM3	OL3	OM2	OL2	OM1	OL1	OM0	OL0
0x004A	TCTL3	R/W	EDG7B	EDG7A	EDG6B	EDG6A	EDG5B	EDG5A	EDG4B	EDG4A
0x004B	TCTL4	R/W	EDG3B	EDG3A	EDG2B	EDG2A	EDG1B	EDG1A	EDG0B	EDG0A
0x004C	TIE	R/W	C7I	C6I	C5I	C4I	C3I	C2I	C1I	C0I
0x004D	TSCR2	R	TOI	0	0	0	TCRE	PR2	PR1	PR0
		W								
0x004E	TFLG1	R/W	C7F	C6F	C5F	C4F	C3F	C2F	C1F	C0F
0x004F	TFLG2	R	TOF	0	0	0	0	0	0	0
		W								
0x0050	TC0 (hi)	R/W	Bit 15	14	13	12	11	10	9	Bit 8
0x0051	TC0 (lo)	R/W	Bit 7	6	5	4	3	2	1	Bit 0
0x0052	TC1 (hi)	R/W	Bit 15	14	13	12	11	10	9	Bit 8
0x0053	TC1 (lo)	R/W	Bit 7	6	5	4	3	2	1	Bit 0
0x0054	TC2 (hi)	R/W	Bit 15	14	13	12	11	10	9	Bit 8
0x0055	TC2 (lo)	R/W	Bit 7	6	5	4	3	2	1	Bit 0

0x0040–0x007F Enhanced Capture Timer 16-Bit 8-Channels (ECT) Map (Sheet 2 of 3)

Address	Name		Bit 7	Bit 6	Bit 5	Bit 4	Bit 3	Bit 2	Bit 1	Bit 0
0x0056	TC3 (hi)	R W	Bit 15	14	13	12	11	10	9	Bit 8
0x0057	TC3 (lo)	R W	Bit 7	6	5	4	3	2	1	Bit 0
0x0058	TC4 (hi)	R W	Bit 15	14	13	12	11	10	9	Bit 8
0x0059	TC4 (lo)	R W	Bit 7	6	5	4	3	2	1	Bit 0
0x005A	TC5 (hi)	R W	Bit 15	14	13	12	11	10	9	Bit 8
0x005B	TC5 (lo)	R W	Bit 7	6	5	4	3	2	1	Bit 0
0x005C	TC6 (hi)	R W	Bit 15	14	13	12	11	10	9	Bit 8
0x005D	TC6 (lo)	R W	Bit 7	6	5	4	3	2	1	Bit 0
0x005E	TC7 (hi)	R W	Bit 15	14	13	12	11	10	9	Bit 8
0x005F	TC7 (lo)	R W	Bit 7	6	5	4	3	2	1	Bit 0
0x0060	PACTL	R W	0	PAEN	PAMOD	PEDGE	CLK1	CLK0	PAOVI	PAI
0x0061	PAFLG	R W	0	0	0	0	0	0	PAOVF	PAIF
0x0062	PACN3 (hi)	R W	Bit 7	6	5	4	3	2	1	Bit 0
0x0063	PACN2 (lo)	R W	Bit 7	6	5	4	3	2	1	Bit 0
0x0064	PACN1 (hi)	R W	Bit 7	6	5	4	3	2	1	Bit 0
0x0065	PACN0 (lo)	R W	Bit 7	6	5	4	3	2	1	Bit 0
0x0066	MCCTL	R W	MCZI	MODMC	RDMCL	0 ICLAT	0 FLMC	MCEN	MCPR1	MCPR0
0x0067	MCFLG	R W	MCZF	0	0	0	POLF3	POLF2	POLF1	POLF0
0x0068	ICPAR	R W	0	0	0	0	PA3EN	PA2EN	PA1EN	PA0EN
0x0069	DLYCT	R W	DLY7	DLY6	DLY5	DLY4	DLY3	DLY2	DLY1	DLY0
0x006A	ICOVW	R W	NOVW7	NOVW6	NOVW5	NOVW4	NOVW3	NOVW2	NOVW1	NOVW0
0x006B	ICSYS	R W	SH37	SH26	SH15	SH04	TFMOD	PACMX	BUFEN	LATQ
0x006C	Reserved	R W	0	0	0	0	0	0	0	0

0x0040–0x007F Enhanced Capture Timer 16-Bit 8-Channels (ECT) Map (Sheet 3 of 3)

Address	Name		Bit 7	Bit 6	Bit 5	Bit 4	Bit 3	Bit 2	Bit 1	Bit 0
0x006D	TIMTST	R	0	0	0	0	0	0	0	0
		W	Reserved For Factory Test							
0x006E	PTPSR	R/W	PTPS7	PTPS6	PTPS5	PTPS4	PTPS3	PTPS2	PTPS1	PTPS0
0x006F	PTMCPSR	R/W	PTMPS7	PTMPS6	PTMPS5	PTMPS4	PTMPS3	PTMPS2	PTMPS1	PTMPS0
0x0070	PBCTL	R	0	PBEN	0	0	0	0	PBOVI	0
		W								
0x0071	PBFLG	R	0	0	0	0	0	0	PBOVF	0
		W								
0x0072	PA3H	R	PA3H7	PA3H6	PA3H5	PA3H4	PA3H3	PA3H2	PA3H1	PA3H0
		W								
0x0073	PA2H	R	PA2H7	PA2H6	PA2H5	PA2H4	PA2H3	PA2H2	PA2H1	PA2H0
		W								
0x0074	PA1H	R	PA1H7	PA1H6	PA1H5	PA1H4	PA1H3	PA1H2	PA1H1	PA1H 0
		W								
0x0075	PA0H	R	PA0H7	PA0H6	PA0H5	PA0H4	PA0H3	PA0H2	PA0H1	PA0H0
		W								
0x0076	MCCNT (hi)	R/W	Bit 15	14	13	12	11	10	9	Bit 8
0x0077	MCCNT (lo)	R/W	Bit 7	6	5	4	3	2	1	Bit 0
0x0078	TC0H (hi)	R	Bit 15	14	13	12	11	10	9	Bit 8
		W								
0x0079	TC0H (lo)	R	Bit 7	6	5	4	3	2	1	Bit 0
		W								
0x007A	TC1H (hi)	R	Bit 15	14	13	12	11	10	9	Bit 8
		W								
0x007B	TC1H (lo)	R	Bit 7	6	5	4	3	2	1	Bit 0
		W								
0x007C	TC2H (hi)	R	Bit 15	14	13	12	11	10	9	Bit 8
		W								
0x007D	TC2H (lo)	R	Bit 7	6	5	4	3	2	1	Bit 0
		W								
0x007E	TC3H (hi)	R	Bit 15	14	13	12	11	10	9	Bit 8
		W								
0x007F	TC3H (lo)	R	Bit 7	6	5	4	3	2	1	Bit 0
		W								

0x0080–0x00AF Analog-to-Digital Converter 10-bit 16-Channels (ATD1) Map (Sheet 1 of 3)

Address	Name		Bit 7	Bit 6	Bit 5	Bit 4	Bit 3	Bit 2	Bit 1	Bit 0
0x0080	ATD1CTL0	R	0	0	0	0	WRAP3	WRAP2	WRAP1	WRAP0
		W								
0x0081	ATD1CTL1	R	ETRIG SEL	0	0	0	ETRIG CH3	ETRIG CH2	ETRIG CH1	ETRIG CH0
		W								
0x0082	ATD1CTL2	R	ADPU	AFFC	AWAI	ETRIGLE	ETRIGP	ETRIGE	ASCIE	ASCIF
		W								
0x0083	ATD1CTL3	R	0	S8C	S4C	S2C	S1C	FIFO	FRZ1	FRZ0
		W								
0x0084	ATD1CTL4	R	SRES8	SMP1	SMP0	PRS4	PRS3	PRS2	PRS1	PRS0
		W								
0x0085	ATD1CTL5	R	DJM	DSGN	SCAN	MULT	CD	CC	CB	CA
		W								
0x0086	ATD1STAT0	R	SCF	0	ETORF	FIFOR	CC3	CC2	CC1	CC0
		W								
0x0087	Reserved	R	0	0	0	0	0	0	0	0
		W								
0x0088	ATD1TEST0	R	U	U	U	U	U	U	U	U
		W	Reserved For Factory Test							
0x0089	ATD1TEST1	R	U	U	U	U	U	U	U	SC
		W								
0x008A	ATD1STAT2	R	CCF15	CCF14	CCF13	CCF12	CCF11	CCF10	CCF9	CCF8
		W								
0x008B	ATD1STAT1	R	CCF7	CCF6	CCF5	CCF4	CCF3	CCF2	CCF1	CCF0
		W								
0x008C	ATD1DIEN0	R	IEN15	IEN14	IEN13	IEN12	IEN11	IEN10	IEN9	IEN8
		W								
0x008D	ATD1DIEN	R	IEN7	IEN6	IEN5	IEN4	IEN3	IEN2	IEN1	IEN0
		W								
0x008E	ATD1PTAD0	R	PTAD15	PTAD14	PTAD13	PTAD12	PTAD11	PTAD10	PTAD9	PTAD8
		W								
0x008F	ATD1PTAD1	R	PTAD7	PTAD6	PTAD5	PTAD4	PTAD3	PTAD2	PTAD1	PTAD0
		W								
0x0090	ATD1DR0H	R	Bit15	14	13	12	11	10	9	Bit8
		W								
0x0091	ATD1DR0L	R	Bit7	Bit6	0	0	0	0	0	0
		W								
0x0092	ATD1DR1H	R	Bit15	14	13	12	11	10	9	Bit8
		W								
0x0093	ATD1DR1L	R	Bit7	Bit6	0	0	0	0	0	0
		W								
0x0094	ATD1DR2H	R	Bit15	14	13	12	11	10	9	Bit8
		W								
0x0095	ATD1DR2L	R	Bit7	Bit6	0	0	0	0	0	0
		W								

0x0080–0x00AF Analog-to-Digital Converter 10-bit 16-Channels (ATD1) Map (Sheet 2 of 3)

Address	Name		Bit 7	Bit 6	Bit 5	Bit 4	Bit 3	Bit 2	Bit 1	Bit 0
0x0096	ATD1DR3H	R	Bit15	14	13	12	11	10	9	Bit8
		W								
0x0097	ATD1DR3L	R	Bit7	Bit6	0	0	0	0	0	0
		W								
0x0098	ATD1DR4H	R	Bit15	14	13	12	11	10	9	Bit8
		W								
0x0099	ATD1DR4L	R	Bit7	Bit6	0	0	0	0	0	0
		W								
0x009A	ATD1DR5H	R	Bit15	14	13	12	11	10	9	Bit8
		W								
0x009B	ATD1DR5L	R	Bit7	Bit6	0	0	0	0	0	0
		W								
0x009C	ATD1DR6H	R	Bit15	14	13	12	11	10	9	Bit8
		W								
0x009D	ATD1DR6L	R	Bit7	Bit6	0	0	0	0	0	0
		W								
0x009E	ATD1DR7H	R	Bit15	14	13	12	11	10	9	Bit8
		W								
0x009F	ATD1DR7L	R	Bit7	Bit6	0	0	0	0	0	0
		W								
0x00A0	ATD1DR8H	R	Bit15	14	13	12	11	10	9	Bit8
		W								
0x00A1	ATD1DR8L	R	Bit7	Bit6	0	0	0	0	0	0
		W								
0x00A2	ATD1DR9H	R	Bit15	14	13	12	11	10	9	Bit8
		W								
0x00A3	ATD1DR9L	R	Bit7	Bit6	0	0	0	0	0	0
		W								
0x00A4	ATD1DR10H	R	Bit15	14	13	12	11	10	9	Bit8
		W								
0x00A5	ATD1DR10L	R	Bit7	Bit6	0	0	0	0	0	0
		W								
0x00A6	ATD1DR11H	R	Bit15	14	13	12	11	10	9	Bit8
		W								
0x00A7	ATD1DR11L	R	Bit7	Bit6	0	0	0	0	0	0
		W								
0x00A8	ATD1DR12H	R	Bit15	14	13	12	11	10	9	Bit8
		W								
0x00A9	ATD1DR12L	R	Bit7	Bit6	0	0	0	0	0	0
		W								
0x00AA	ATD1DR13H	R	Bit15	14	13	12	11	10	9	Bit8
		W								
0x00AB	ATD1DR13L	R	Bit7	Bit6	0	0	0	0	0	0
		W								

0x0080–0x00AF Analog-to-Digital Converter 10-bit 16-Channels (ATD1) Map (Sheet 3 of 3)

Address	Name		Bit 7	Bit 6	Bit 5	Bit 4	Bit 3	Bit 2	Bit 1	Bit 0
0x00AC	ATD1DR14H	R	Bit15	14	13	12	11	10	9	Bit8
		W								
0x00AD	ATD1DR14L	R	Bit7	Bit6	0	0	0	0	0	0
		W								
0x00AE	ATD1DR15H	R	Bit15	14	13	12	11	10	9	Bit8
		W								
0x00AF	ATD1DR15L	R	Bit7	Bit6	0	0	0	0	0	0
		W								

0x00B0–0x00B7 Inter IC Bus (IIC1) Map

Address	Name		Bit 7	Bit 6	Bit 5	Bit 4	Bit 3	Bit 2	Bit 1	Bit 0
0x00B0	IBAD	R	ADR7	ADR6	ADR5	ADR4	ADR3	ADR2	ADR1	0
		W								
0x00B1	IBFD	R	IBC7	IBC6	IBC5	IBC4	IBC3	IBC2	IBC1	IBC0
		W								
0x00B2	IBCR	R	IBEN	IBIE	MS/$\overline{SL}$	TX/$\overline{RX}$	TXAK	0	0	IBSWAI
		W						RSTA		
0x00B3	IBSR	R	TCF	IAAS	IBB	IBAL	0	SRW	IBIF	RXAK
		W								
0x00B4	IBDR	R	D7	D6	D5	D4	D3	D2	D1	D 0
		W								
0x00B5	Reserved	R	0	0	0	0	0	0	0	0
		W								
0x00B6	Reserved	R	0	0	0	0	0	0	0	0
		W								
0x00B7	Reserved	R	0	0	0	0	0	0	0	0
		W								

0x00B8–0x00BF Asynchronous Serial Interface (SCI2) Map

Address	Name		Bit 7	Bit 6	Bit 5	Bit 4	Bit 3	Bit 2	Bit 1	Bit 0
0x00B8	SCI2BDH[1]	R	IREN	TNP1	TNP0	SBR12	SBR11	SBR10	SBR9	SBR8
		W								
0x00B9	SCI2BDL[1]	R	SBR7	SBR6	SBR5	SBR4	SBR3	SBR2	SBR1	SBR0
		W								
0x00BA	SCI2CR1[1]	R	LOOPS	SCISWAI	RSRC	M	WAKE	ILT	PE	PT
		W								
0x00B8	SCI2ASR1[2]	R	RXEDGIF	0	0	0	0	BERRV	BERRIF	BKDIF
		W								
0x00B9	SCI2ACR1[2]	R	RXEDGIE	0	0	0	0	0	BERRIE	BKDIE
		W								
0x00BA	SCI2ACR2[2]	R	0	0	0	0	0	BERRM1	BERRM0	BKDFE
		W								

0x00B8–0x00BF Asynchronous Serial Interface (SCI2) Map (continued)

Address	Name		Bit 7	Bit 6	Bit 5	Bit 4	Bit 3	Bit 2	Bit 1	Bit 0
0x00BB	SCI2CR2	R/W	TIE	TCIE	RIE	ILIE	TE	RE	RWU	SBK
0x00BC	SCI2SR1	R	TDRE	TC	RDRF	IDLE	OR	NF	FE	PF
		W								
0x00BD	SCI2SR2	R	AMAP	0	0	TXPOL	RXPOL	BRK13	TXDIR	RAF
		W								
0x00BE	SCI2DRH	R	R8	T8	0	0	0	0	0	0
		W								
0x00BF	SCI2DRL	R	R7	R6	R5	R4	R3	R2	R1	R0
		W	T7	T6	T5	T4	T3	T2	T1	T0

[1] Those registers are accessible if the AMAP bit in the SCI2SR2 register is set to zero

[2] Those registers are accessible if the AMAP bit in the SCI2SR2 register is set to one

0x00C0–0x00C7 Asynchronous Serial Interface (SCI3) Map

Address	Name		Bit 7	Bit 6	Bit 5	Bit 4	Bit 3	Bit 2	Bit 1	Bit 0
0x00C0	SCI3BDH[1]	R/W	IREN	TNP1	TNP0	SBR12	SBR11	SBR10	SBR9	SBR8
0x00C1	SCI3BDL[1]	R/W	SBR7	SBR6	SBR5	SBR4	SBR3	SBR2	SBR1	SBR0
0x00C2	SCI3CR1[1]	R/W	LOOPS	SCISWAI	RSRC	M	WAKE	ILT	PE	PT
0x00C0	SCI3ASR1[2]	R	RXEDGIF	0	0	0	0	BERRV	BERRIF	BKDIF
		W								
0x00C1	SCI3ACR1[2]	R	RXEDGIE	0	0	0	0	0	BERRIE	BKDIE
		W								
0x00C2	SCI3ACR2[2]	R	0	0	0	0	0	BERRM1	BERRM0	BKDFE
		W								
0x00C3	SCI3CR2	R/W	TIE	TCIE	RIE	ILIE	TE	RE	RWU	SBK
0x00C4	SCI3SR1	R	TDRE	TC	RDRF	IDLE	OR	NF	FE	PF
		W								
0x00C5	SCI3SR2	R	AMAP	0	0	TXPOL	RXPOL	BRK13	TXDIR	RAF
		W								
0x00C6	SCI3DRH	R	R8	T8	0	0	0	0	0	0
		W								
0x00C7	SCI3DRL	R	R7	R6	R5	R4	R3	R2	R1	R0
		W	T7	T6	T5	T4	T3	T2	T1	T0

[1] Those registers are accessible if the AMAP bit in the SCI3SR2 register is set to zero

[2] Those registers are accessible if the AMAP bit in the SCI3SR2 register is set to one

0x00C8–0x00CF Asynchronous Serial Interface (SCI0) Map

Address	Name		Bit 7	Bit 6	Bit 5	Bit 4	Bit 3	Bit 2	Bit 1	Bit 0
0x00C8	SCI0BDH[1]	R/W	IREN	TNP1	TNP0	SBR12	SBR11	SBR10	SBR9	SBR8
0x00C9	SCI0BDL[1]	R/W	SBR7	SBR6	SBR5	SBR4	SBR3	SBR2	SBR1	SBR0
0x00CA	SCI0CR1[1]	R/W	LOOPS	SCISWAI	RSRC	M	WAKE	ILT	PE	PT
0x00C8	SCI0ASR1[2]	R	RXEDGIF	0	0	0	0	BERRV	BERRIF	BKDIF
		W								
0x00C9	SCI0ACR1[2]	R	RXEDGIE	0	0	0	0	0	BERRIE	BKDIE
		W								
0x00CA	SCI0ACR2[2]	R	0	0	0	0	0	BERRM1	BERRM0	BKDFE
		W								
0x00CB	SCI0CR2	R/W	TIE	TCIE	RIE	ILIE	TE	RE	RWU	SBK
0x00CC	SCI0SR1	R	TDRE	TC	RDRF	IDLE	OR	NF	FE	PF
		W								
0x00CD	SCI0SR2	R	AMAP	0	0	TXPOL	RXPOL	BRK13	TXDIR	RAF
		W								
0x00CE	SCI0DRH	R	R8	T8	0	0	0	0	0	0
		W								
0x00CF	SCI0DRL	R	R7	R6	R5	R4	R3	R2	R1	R0
		W	T7	T6	T5	T4	T3	T2	T1	T0

[1] Those registers are accessible if the AMAP bit in the SCI0SR2 register is set to zero

[2] Those registers are accessible if the AMAP bit in the SCI0SR2 register is set to one

0x00D0–0x00D7 Asynchronous Serial Interface (SCI1) Map

Address	Name		Bit 7	Bit 6	Bit 5	Bit 4	Bit 3	Bit 2	Bit 1	Bit 0
0x00D0	SCI1BDH[1]	R/W	IREN	TNP1	TNP0	SBR12	SBR11	SBR10	SBR9	SBR8
0x00D1	SCI1BDL[1]	R/W	SBR7	SBR6	SBR5	SBR4	SBR3	SBR2	SBR1	SBR0
0x00D2	SCI1CR1[1]	R/W	LOOPS	SCISWAI	RSRC	M	WAKE	ILT	PE	PT
0x00D0	SCI1ASR1[2]	R	RXEDGIF	0	0	0	0	BERRV	BERRIF	BKDIF
		W								
0x00D1	SCI1ACR1[2]	R	RXEDGIE	0	0	0	0	0	BERRIE	BKDIE
		W								
0x00D2	SCI1ACR2[2]	R	0	0	0	0	0	BERRM1	BERRM0	BKDFE
		W								
0x00D3	SCI1CR2	R/W	TIE	TCIE	RIE	ILIE	TE	RE	RWU	SBK
0x00D4	SCI1SR1	R	TDRE	TC	RDRF	IDLE	OR	NF	FE	PF
		W								

0x00D0–0x00D7 Asynchronous Serial Interface (SCI1) Map (continued)

Address	Name		Bit 7	Bit 6	Bit 5	Bit 4	Bit 3	Bit 2	Bit 1	Bit 0
0x00D5	SCI1SR2	R	AMAP	0	0	TXPOL	RXPOL	BRK13	TXDIR	RAF
		W								
0x00D6	SCI1DRH	R	R8	T8	0	0	0	0	0	0
		W								
0x00D7	SCI1DRL	R	R7	R6	R5	R4	R3	R2	R1	R0
		W	T7	T6	T5	T4	T3	T2	T1	T0

[1] Those registers are accessible if the AMAP bit in the SCI1SR2 register is set to zero

[2] Those registers are accessible if the AMAP bit in the SCI1SR2 register is set to one

0x00D8–0x00DF Serial Peripheral Interface (SPI0) Map

Address	Name		Bit 7	Bit 6	Bit 5	Bit 4	Bit 3	Bit 2	Bit 1	Bit 0
0x00D8	SPI0CR1	R	SPIE	SPE	SPTIE	MSTR	CPOL	CPHA	SSOE	LSBFE
		W								
0x00D9	SPI0CR2	R	0	0	0	MODFEN	BIDIROE	0	SPISWAI	SPC0
		W								
0x00DA	SPI0BR	R	0	SPPR2	SPPR1	SPPR0	0	SPR2	SPR1	SPR0
		W								
0x00DB	SPI0SR	R	SPIF	0	SPTEF	MODF	0	0	0	0
		W								
0x00DC	Reserved	R	0	0	0	0	0	0	0	0
		W								
0x00DD	SPI0DR	R	Bit7	6	5	4	3	2	1	Bit0
		W								
0x00DE	Reserved	R	0	0	0	0	0	0	0	0
		W								
0x00DF	Reserved	R	0	0	0	0	0	0	0	0
		W								

0x00E0–0x00E7 Inter IC Bus (IIC0) Map

Address	Name		Bit 7	Bit 6	Bit 5	Bit 4	Bit 3	Bit 2	Bit 1	Bit 0
0x00E0	IBAD	R	ADR7	ADR6	ADR5	ADR4	ADR3	ADR2	ADR1	0
		W								
0x00E1	IBFD	R	IBC7	IBC6	IBC5	IBC4	IBC3	IBC2	IBC1	IBC0
		W								
0x00E2	IBCR	R	IBEN	IBIE	MS/$\overline{SL}$	TX/$\overline{RX}$	TXAK	0	0	IBSWAI
		W						RSTA		
0x00E3	IBSR	R	TCF	IAAS	IBB	IBAL	0	SRW	IBIF	RXAK
		W								
0x00E4	IBDR	R	D7	D6	D5	D4	D3	D2	D1	D 0
		W								

0x00E0–0x00E7 Inter IC Bus (IIC0) Map (continued)

Address	Name		Bit 7	Bit 6	Bit 5	Bit 4	Bit 3	Bit 2	Bit 1	Bit 0
0x00E5	Reserved	R	0	0	0	0	0	0	0	0
		W								
0x00E6	Reserved	R	0	0	0	0	0	0	0	0
		W								
0x00E7	Reserved	R	0	0	0	0	0	0	0	0
		W								

0x00E8–0x00EF Reserved

Address	Name		Bit 7	Bit 6	Bit 5	Bit 4	Bit 3	Bit 2	Bit 1	Bit 0
0x00E8	Reserved	R	0	0	0	0	0	0	0	0
		W								
0x00E9	Reserved	R	0	0	0	0	0	0	0	0
		W								
0x00EA	Reserved	R	0	0	0	0	0	0	0	0
		W								
0x00EB	Reserved	R	0	0	0	0	0	0	0	0
		W								
0x00EC	Reserved	R	0	0	0	0	0	0	0	0
		W								
0x00ED	Reserved	R	0	0	0	0	0	0	0	0
		W								
0x00EE	Reserved	R	0	0	0	0	0	0	0	0
		W								
0x00EF	Reserved	R	0	0	0	0	0	0	0	0
		W								

0x00F0–0x00F7 Serial Peripheral Interface (SPI1) Map

Address	Name		Bit 7	Bit 6	Bit 5	Bit 4	Bit 3	Bit 2	Bit 1	Bit 0
0x00F0	SPI1CR1	R/W	SPIE	SPE	SPTIE	MSTR	CPOL	CPHA	SSOE	LSBFE
0x00F1	SPI1CR2	R	0	0	0	MODFEN	BIDIROE	0	SPISWAI	SPC0
		W								
0x00F2	SPI1BR	R	0	SPPR2	SPPR1	SPPR0	0	SPR2	SPR1	SPR0
		W								
0x00F3	SPI1SR	R	SPIF	0	SPTEF	MODF	0	0	0	0
		W								
0x00F4	Reserved	R	0	0	0	0	0	0	0	0
		W								
0x00F5	SPI1DR	R/W	Bit7	6	5	4	3	2	1	Bit0
0x00F6	Reserved	R	0	0	0	0	0	0	0	0
		W								
0x00F7	Reserved	R	0	0	0	0	0	0	0	0
		W								

0x00F8–0x00FF Serial Peripheral Interface (SPI2) Map

Address	Name		Bit 7	Bit 6	Bit 5	Bit 4	Bit 3	Bit 2	Bit 1	Bit 0
0x00F8	SPI2CR1	R	SPIE	SPE	SPTIE	MSTR	CPOL	CPHA	SSOE	LSBFE
		W								
0x00F9	SPI2CR2	R	0	0	0	MODFEN	BIDIROE	0	SPISWAI	SPC0
		W								
0x00FA	SPI2BR	R	0	SPPR2	SPPR1	SPPR0	0	SPR2	SPR1	SPR0
		W								
0x00FB	SPI2SR	R	SPIF	0	SPTEF	MODF	0	0	0	0
		W								
0x00FC	Reserved	R	0	0	0	0	0	0	0	0
		W								
0x00FD	SPI2DR	R	Bit7	6	5	4	3	2	1	Bit0
		W								
0x00FE	Reserved	R	0	0	0	0	0	0	0	0
		W								
0x00FF	Reserved	R	0	0	0	0	0	0	0	0
		W								

0x0100–0x010F Flash Control Register (FTX512K4) Map

Address	Name		Bit 7	Bit 6	Bit 5	Bit 4	Bit 3	Bit 2	Bit 1	Bit 0
0x0100	FCLKDIV	R	FDIVLD	PRDIV8	FDIV5	FDIV4	FDIV3	FDIV2	FDIV1	FDIV0
		W								
0x0101	FSEC	R	KEYEN1	KEYEN0	RNV5	RNV4	RNV3	RNV2	SEC1	SEC0
		W								
0x0102	FTSTMOD	R	0	MRDS		WRALL	0	0	0	0
		W								
0x0103	FCNFG	R	CBEIE	CCIE	KEYACC	0	0	0	0	0
		W								
0x0104	FPROT	R	FPOPEN	RNV6	FPHDIS	FPHS1	FPHS0	FPLDIS	FPLS1	FPLS0
		W								
0x0105	FSTAT	R	CBEIF	CCIF	PVIOL	ACCERR	0	BLANK	0	0
		W								
0x0106	FCMD	R	0	CMDB[6:0]						
		W								
0x0107	FCTL	R	NV7	NV6	NV5	NV4	NV3	NV2	NV1	NV0
		W								
0x0108	FADDRHI	R	FADDRHI							
		W								
0x0109	FADDRLO	R	FADDRLO							
		W								
0x010A	FDATAHI	R	FDATAHI							
		W								
0x010B	FDATALO	R	FDATALO							
		W								

0x0100–0x010F Flash Control Register (FTX512K4) Map (continued)

Address	Name		Bit 7	Bit 6	Bit 5	Bit 4	Bit 3	Bit 2	Bit 1	Bit 0
0x010C	Reserved	R	0	0	0	0	0	0	0	0
		W								
0x010D	Reserved	R	0	0	0	0	0	0	0	0
		W								
0x010E	Reserved	R	0	0	0	0	0	0	0	0
		W								
0x010F	Reserved	R	0	0	0	0	0	0	0	0
		W								

0x0110–0x011B EEPROM Control Register (EETX4K) Map

Address	Name		Bit 7	Bit 6	Bit 5	Bit 4	Bit 3	Bit 2	Bit 1	Bit 0
0x0110	ECLKDIV	R	EDIVLD	PRDIV8	EDIV5	EDIV4	EDIV3	EDIV2	EDIV1	EDIV0
		W								
0x0111	Reserved	R	0	0	0	0	0	0	0	0
		W								
0x0112	Reserved	R	0	0	0	0	0	0	0	0
		W								
0x0113	ECNFG	R	CBEIE	CCIE	0	0	0	0	0	0
		W								
0x0114	EPROT	R	EPOPEN	RNV6	RNV5	RNV4	EPDIS	EPS2	EPS1	EPS0
		W								
0x0115	ESTAT	R	CBEIF	CCIF	PVIOL	ACCERR	0	BLANK	0	0
		W								
0x0116	ECMD	R	0	CMDB[6:0]						
		W								
0x0117	Reserved	R	0	0	0	0	0	0	0	0
		W								
0x0118	EADDRHI	R	0	0	0	0	0	EABHI		
		W								
0x0119	EADDRLO	R	EABLO							
		W								
0x011A	EDATAHI	R	EDHI							
		W								
0x011B	EDATALO	R	EDLO							
		W								

0x011C–0x011F Memory Map Control (S12XMMC) Map 4 of 4

Address	Name		Bit 7	Bit 6	Bit 5	Bit 4	Bit 3	Bit 2	Bit 1	Bit 0
0x011C	RAMWPC	R	RPWE	0	0	0	0	0	AVIE	AVIF
		W								
0x011D	RAMXGU	R	1	XGU6	XGU5	XGU4	XGU3	XGU2	XGU1	XGU0
		W								
0x011E	RAMSHL	R	1	SHL6	SHL5	SHL4	SHL3	SHL2	SHL1	SHL0
		W								
0x011F	RAMSHU	R	1	SHU6	SHU5	SHU4	SHU3	SHU2	SHU1	SHU0
		W								

0x0120–0x012F Interrupt Module (S12XINT) Map

Address	Name		Bit 7	Bit 6	Bit 5	Bit 4	Bit 3	Bit 2	Bit 1	Bit 0
0x0120	Reserved	R	0	0	0	0	0	0	0	0
		W								
0x0121	IVBR	R	IVB_ADDR[7:0]							
		W								
0x0122	Reserved	R	0	0	0	0	0	0	0	0
		W								
0x0123	Reserved	R	0	0	0	0	0	0	0	0
		W								
0x0124	Reserved	R	0	0	0	0	0	0	0	0
		W								
0x0125	Reserved	R	0	0	0	0	0	0	0	0
		W								
0x0126	INT_XGPRIO	R	0	0	0	0	0	XILVL[2:0]		
		W								
0x0127	INT_CFADDR	R	INT_CFADDR[7:4]				0	0	0	0
		W								
0x0128	INT_CFDATA0	R	RQST	0	0	0	0	PRIOLVL[2:0]		
		W								
0x0129	INT_CFDATA1	R	RQST	0	0	0	0	PRIOLVL[2:0]		
		W								
0x012A	INT_CFDATA2	R	RQST	0	0	0	0	PRIOLVL[2:0]		
		W								
0x012B	INT_CFDATA3	R	RQST	0	0	0	0	PRIOLVL[2:0]		
		W								
0x012C	INT_CFDATA4	R	RQST	0	0	0	0	PRIOLVL[2:0]		
		W								
0x012D	INT_CFDATA5	R	RQST	0	0	0	0	PRIOLVL[2:0]		
		W								
0x012E	INT_CFDATA6	R	RQST	0	0	0	0	PRIOLVL[2:0]		
		W								
0x012F	INT_CFDATA7	R	RQST	0	0	0	0	PRIOLVL[2:0]		
		W								

0x00130–0x0137 Asynchronous Serial Interface (SCI4) Map

Address	Name		Bit 7	Bit 6	Bit 5	Bit 4	Bit 3	Bit 2	Bit 1	Bit 0
0x0130	SCI4BDH[1]	R/W	IREN	TNP1	TNP0	SBR12	SBR11	SBR10	SBR9	SBR8
0x0131	SCI4BDL[1]	R/W	SBR7	SBR6	SBR5	SBR4	SBR3	SBR2	SBR1	SBR0
0x0132	SCI4CR1[1]	R/W	LOOPS	SCISWAI	RSRC	M	WAKE	ILT	PE	PT
0x0130	SCI4ASR1[2]	R	RXEDGIF	0	0	0	0	BERRV	BERRIF	BKDIF
		W								
0x0131	SCI4ACR1[2]	R	RXEDGIE	0	0	0	0	0	BERRIE	BKDIE
		W								
0x0132	SCI4ACR2[2]	R	0	0	0	0	0	BERRM1	BERRM0	BKDFE
		W								
0x0133	SCI4CR2	R/W	TIE	TCIE	RIE	ILIE	TE	RE	RWU	SBK
0x0134	SCI4SR1	R	TDRE	TC	RDRF	IDLE	OR	NF	FE	PF
		W								
0x0135	SCI4SR2	R	AMAP	0	0	TXPOL	RXPOL	BRK13	TXDIR	RAF
		W								
0x0136	SCI4DRH	R	R8	T8	0	0	0	0	0	0
		W								
0x0137	SCI4DRL	R	R7	R6	R5	R4	R3	R2	R1	R0
		W	T7	T6	T5	T4	T3	T2	T1	T0

[1] Those registers are accessible if the AMAP bit in the SCI4SR2 register is set to zero

[2] Those registers are accessible if the AMAP bit in the SCI4SR2 register is set to one

0x0138–0x013F Asynchronous Serial Interface (SCI5) Map

Address	Name		Bit 7	Bit 6	Bit 5	Bit 4	Bit 3	Bit 2	Bit 1	Bit 0
0x0138	SCI5BDH[1]	R/W	IREN	TNP1	TNP0	SBR12	SBR11	SBR10	SBR9	SBR8
0x0139	SCI5BDL[1]	R/W	SBR7	SBR6	SBR5	SBR4	SBR3	SBR2	SBR1	SBR0
0x013A	SCI5CR1[1]	R/W	LOOPS	SCISWAI	RSRC	M	WAKE	ILT	PE	PT
0x0138	SCI5ASR1[2]	R	RXEDGIF	0	0	0	0	BERRV	BERRIF	BKDIF
		W								
0x0139	SCI5ACR1[2]	R	RXEDGIE	0	0	0	0	0	BERRIE	BKDIE
		W								
0x013A	SCI5ACR2[2]	R	0	0	0	0	0	BERRM1	BERRM0	BKDFE
		W								
0x013B	SCI5CR2	R/W	TIE	TCIE	RIE	ILIE	TE	RE	RWU	SBK
0x013C	SCI5SR1	R	TDRE	TC	RDRF	IDLE	OR	NF	FE	PF
		W								

0x0138–0x013F Asynchronous Serial Interface (SCI5) Map (continued)

Address	Name		Bit 7	Bit 6	Bit 5	Bit 4	Bit 3	Bit 2	Bit 1	Bit 0
0x013D	SCI5SR2	R	AMAP	0	0	TXPOL	RXPOL	BRK13	TXDIR	RAF
		W								
0x013E	SCI5DRH	R	R8	T8	0	0	0	0	0	0
		W								
0x013F	SCI5DRL	R	R7	R6	R5	R4	R3	R2	R1	R0
		W	T7	T6	T5	T4	T3	T2	T1	T0

[1] Those registers are accessible if the AMAP bit in the SCI5SR2 register is set to zero

[2] Those registers are accessible if the AMAP bit in the SCI5SR2 register is set to one

0x0140–0x017F Freescale Scalable CAN — MSCAN (CAN0) Map

Address	Name		Bit 7	Bit 6	Bit 5	Bit 4	Bit 3	Bit 2	Bit 1	Bit 0
0x0140	CAN0CTL0	R	RXFRM	RXACT	CSWAI	SYNCH	TIME	WUPE	SLPRQ	INITRQ
		W								
0x0141	CAN0CTL1	R	CANE	CLKSRC	LOOPB	LISTEN	BORM	WUPM	SLPAK	INITAK
		W								
0x0142	CAN0BTR0	R	SJW1	SJW0	BRP5	BRP4	BRP3	BRP2	BRP1	BRP0
		W								
0x0143	CAN0BTR1	R	SAMP	TSEG22	TSEG21	TSEG20	TSEG13	TSEG12	TSEG11	TSEG10
		W								
0x0144	CAN0RFLG	R	WUPIF	CSCIF	RSTAT1	RSTAT0	TSTAT1	TSTAT0	OVRIF	RXF
		W								
0x0145	CAN0RIER	R	WUPIE	CSCIE	RSTATE1	RSTATE0	TSTATE1	TSTATE0	OVRIE	RXFIE
		W								
0x0146	CAN0TFLG	R	0	0	0	0	0	TXE2	TXE1	TXE0
		W								
0x0147	CAN0TIER	R	0	0	0	0	0	TXEIE2	TXEIE1	TXEIE0
		W								
0x0148	CAN0TARQ	R	0	0	0	0	0	ABTRQ2	ABTRQ1	ABTRQ0
		W								
0x0149	CAN0TAAK	R	0	0	0	0	0	ABTAK2	ABTAK1	ABTAK0
		W								
0x014A	CAN0TBSEL	R	0	0	0	0	0	TX2	TX1	TX0
		W								
0x014B	CAN0IDAC	R	0	0	IDAM1	IDAM0	0	IDHIT2	IDHIT1	IDHIT0
		W								
0x014C	Reserved	R	0	0	0	0	0	0	0	0
		W								
0x014D	CAN0MISC	R	0	0	0	0	0	0	0	BOHOLD
		W								
0x014E	CAN0RXERR	R	RXERR7	RXERR6	RXERR5	RXERR4	RXERR3	RXERR2	RXERR1	RXERR0
		W								
0x014F	CAN0TXERR	R	TXERR7	TXERR6	TXERR5	TXERR4	TXERR3	TXERR2	TXERR1	TXERR0
		W								

0x0140–0x017F Freescale Scalable CAN — MSCAN (CAN0) Map (continued)

Address	Name		Bit 7	Bit 6	Bit 5	Bit 4	Bit 3	Bit 2	Bit 1	Bit 0
0x0150–0x0153	CAN0IDAR0–CAN0IDAR3	R/W	AC7	AC6	AC5	AC4	AC3	AC2	AC1	AC0
0x0154–0x0157	CAN0IDMR0–CAN0IDMR3	R/W	AM7	AM6	AM5	AM4	AM3	AM2	AM1	AM0
0x0158–0x015B	CAN0IDAR4–CAN0IDAR7	R/W	AC7	AC6	AC5	AC4	AC3	AC2	AC1	AC0
0x015C – 0x015F	CAN0IDMR4–CAN0IDMR7	R/W	AM7	AM6	AM5	AM4	AM3	AM2	AM1	AM0
0x0160–0x016F	CAN0RXFG	R	FOREGROUND RECEIVE BUFFER (See Detailed MSCAN Foreground Receive and Transmit Buffer Layout)							
		W								
0x0170–0x017F	CAN0TXFG	R/W	FOREGROUND TRANSMIT BUFFER (See Detailed MSCAN Foreground Receive and Transmit Buffer Layout)							

Detailed MSCAN Foreground Receive and Transmit Buffer Layout

Address	Name		Bit 7	Bit 6	Bit 5	Bit 4	Bit 3	Bit 2	Bit 1	Bit 0
0xXXX0	Extended ID	R	ID28	ID27	ID26	ID25	ID24	ID23	ID22	ID21
	Standard ID	R	ID10	ID9	ID8	ID7	ID6	ID5	ID4	ID3
	CANxRIDR0	W								
0xXXX1	Extended ID	R	ID20	ID19	ID18	SRR=1	IDE=1	ID17	ID16	ID15
	Standard ID	R	ID2	ID1	ID0	RTR	IDE=0			
	CANxRIDR1	W								
0xXXX2	Extended ID	R	ID14	ID13	ID12	ID11	ID10	ID9	ID8	ID7
	Standard ID	R								
	CANxRIDR2	W								
0xXXX3	Extended ID	R	ID6	ID5	ID4	ID3	ID2	ID1	ID0	RTR
	Standard ID	R								
	CANxRIDR3	W								
0xXXX4 – 0xXXXB	CANxRDSR0–CANxRDSR7	R/W	DB7	DB6	DB5	DB4	DB3	DB2	DB1	DB0
0xXXXC	CANRxDLR	R					DLC3	DLC2	DLC1	DLC0
		W								
0xXXXD	Reserved	R/W								
0xXXXE	CANxRTSRH	R	TSR15	TSR14	TSR13	TSR12	TSR11	TSR10	TSR9	TSR8
		W								
0xXXXF	CANxRTSRL	R	TSR7	TSR6	TSR5	TSR4	TSR3	TSR2	TSR1	TSR0
		W								
0xXX10	Extended ID CANxTIDR0	R/W	ID28	ID27	ID26	ID25	ID24	ID23	ID22	ID21
	Standard ID	R/W	ID10	ID9	ID8	ID7	ID6	ID5	ID4	ID3

Detailed MSCAN Foreground Receive and Transmit Buffer Layout (continued)

Address	Name		Bit 7	Bit 6	Bit 5	Bit 4	Bit 3	Bit 2	Bit 1	Bit 0
0xXX0x XX10	Extended ID CANxTIDR1	R/W	ID20	ID19	ID18	SRR=1	IDE=1	ID17	ID16	ID15
	Standard ID	R/W	ID2	ID1	ID0	RTR	IDE=0			
0xXX12	Extended ID CANxTIDR2	R/W	ID14	ID13	ID12	ID11	ID10	ID9	ID8	ID7
	Standard ID	R/W								
0xXX13	Extended ID CANxTIDR3	R/W	ID6	ID5	ID4	ID3	ID2	ID1	ID0	RTR
	Standard ID	R/W								
0xXX14 – 0xXX1B	CANxTDSR0– CANxTDSR7	R/W	DB7	DB6	DB5	DB4	DB3	DB2	DB1	DB0
0xXX1C	CANxTDLR	R/W					DLC3	DLC2	DLC1	DLC0
0xXX1D	CANxTTBPR	R/W	PRIO7	PRIO6	PRIO5	PRIO4	PRIO3	PRIO2	PRIO1	PRIO0
0xXX1E	CANxTTSRH	R	TSR15	TSR14	TSR13	TSR12	TSR11	TSR10	TSR9	TSR8
		W								
0xXX1F	CANxTTSRL	R	TSR7	TSR6	TSR5	TSR4	TSR3	TSR2	TSR1	TSR0
		W								

0x0180–0x01BF Freescale Scalable CAN — MSCAN (CAN1) Map (Sheet 1 of 3)

Address	Name		Bit 7	Bit 6	Bit 5	Bit 4	Bit 3	Bit 2	Bit 1	Bit 0
0x0180	CAN1CTL0	R	RXFRM	RXACT	CSWAI	SYNCH	TIME	WUPE	SLPRQ	INITRQ
		W								
0x0181	CAN1CTL1	R	CANE	CLKSRC	LOOPB	LISTEN	BORM	WUPM	SLPAK	INITAK
		W								
0x0182	CAN1BTR0	R/W	SJW1	SJW0	BRP5	BRP4	BRP3	BRP2	BRP1	BRP0
0x0183	CAN1BTR1	R/W	SAMP	TSEG22	TSEG21	TSEG20	TSEG13	TSEG12	TSEG11	TSEG10
0x0184	CAN1RFLG	R	WUPIF	CSCIF	RSTAT1	RSTAT0	TSTAT1	TSTAT0	OVRIF	RXF
		W								
0x0185	CAN1RIER	R/W	WUPIE	CSCIE	RSTATE1	RSTATE0	TSTATE1	TSTATE0	OVRIE	RXFIE
0x0186	CAN1TFLG	R	0	0	0	0	0	TXE2	TXE1	TXE0
		W								
0x0187	CAN1TIER	R	0	0	0	0	0	TXEIE2	TXEIE1	TXEIE0
		W								
0x0188	CAN1TARQ	R	0	0	0	0	0	ABTRQ2	ABTRQ1	ABTRQ0
		W								

0x0180–0x01BF Freescale Scalable CAN — MSCAN (CAN1) Map (Sheet 2 of 3)

Address	Name		Bit 7	Bit 6	Bit 5	Bit 4	Bit 3	Bit 2	Bit 1	Bit 0
0x0189	CAN1TAAK	R	0	0	0	0	0	ABTAK2	ABTAK1	ABTAK0
		W								
0x018A	CAN1TBSEL	R	0	0	0	0	0	TX2	TX1	TX0
		W								
0x018B	CAN1IDAC	R	0	0	IDAM1	IDAM0	0	IDHIT2	IDHIT1	IDHIT0
		W								
0x018C	Reserved	R	0	0	0	0	0	0	0	0
		W								
0x018D	CAN1MISC	R	0	0	0	0	0	0	0	BOHOLD
		W								
0x018E	CAN1RXERR	R	RXERR7	RXERR6	RXERR5	RXERR4	RXERR3	RXERR2	RXERR1	RXERR0
		W								
0x018F	CAN1TXERR	R	TXERR7	TXERR6	TXERR5	TXERR4	TXERR3	TXERR2	TXERR1	TXERR0
		W								
0x0190	CAN1IDAR0	R/W	AC7	AC6	AC5	AC4	AC3	AC2	AC1	AC0
0x0191	CAN1IDAR1	R/W	AC7	AC6	AC5	AC4	AC3	AC2	AC1	AC0
0x0192	CAN1IDAR2	R/W	AC7	AC6	AC5	AC4	AC3	AC2	AC1	AC0
0x0193	CAN1IDAR3	R/W	AC7	AC6	AC5	AC4	AC3	AC2	AC1	AC0
0x0194	CAN1IDMR0	R/W	AM7	AM6	AM5	AM4	AM3	AM2	AM1	AM0
0x0195	CAN1IDMR1	R/W	AM7	AM6	AM5	AM4	AM3	AM2	AM1	AM0
0x0196	CAN1IDMR2	R/W	AM7	AM6	AM5	AM4	AM3	AM2	AM1	AM0
0x0197	CAN1IDMR3	R/W	AM7	AM6	AM5	AM4	AM3	AM2	AM1	AM0
0x0198	CAN1IDAR4	R/W	AC7	AC6	AC5	AC4	AC3	AC2	AC1	AC0
0x0199	CAN1IDAR5	R/W	AC7	AC6	AC5	AC4	AC3	AC2	AC1	AC0
0x019A	CAN1IDAR6	R/W	AC7	AC6	AC5	AC4	AC3	AC2	AC1	AC0
0x019B	CAN1IDAR7	R/W	AC7	AC6	AC5	AC4	AC3	AC2	AC1	AC0
0x019C	CAN1IDMR4	R/W	AM7	AM6	AM5	AM4	AM3	AM2	AM1	AM0
0x019D	CAN1IDMR5	R/W	AM7	AM6	AM5	AM4	AM3	AM2	AM1	AM0
0x019E	CAN1IDMR6	R/W	AM7	AM6	AM5	AM4	AM3	AM2	AM1	AM0

0x0180–0x01BF Freescale Scalable CAN — MSCAN (CAN1) Map (Sheet 3 of 3)

Address	Name		Bit 7	Bit 6	Bit 5	Bit 4	Bit 3	Bit 2	Bit 1	Bit 0
0x019F	CAN1IDMR7	R W	AM7	AM6	AM5	AM4	AM3	AM2	AM1	AM0
0x01A0– 0x01AF	CAN1RXFG	R	FOREGROUND RECEIVE BUFFER (See Detailed MSCAN Foreground Receive and Transmit Buffer Layout)							
		W								
0x01B0– 0x01BF	CAN1TXFG	R W	FOREGROUND TRANSMIT BUFFER (See Detailed MSCAN Foreground Receive and Transmit Buffer Layout)							

0x01C0–0x01FF Freescale Scalable CAN — MSCAN (CAN2) Map

Address	Name		Bit 7	Bit 6	Bit 5	Bit 4	Bit 3	Bit 2	Bit 1	Bit 0
0x01C0	CAN2CTL0	R	RXFRM	RXACT	CSWAI	SYNCH	TIME	WUPE	SLPRQ	INITRQ
		W								
0x01C1	CAN2CTL1	R	CANE	CLKSRC	LOOPB	LISTEN	BORM	WUPM	SLPAK	INITAK
		W								
0x01C2	CAN2BTR0	R W	SJW1	SJW0	BRP5	BRP4	BRP3	BRP2	BRP1	BRP0
0x01C3	CAN2BTR1	R W	SAMP	TSEG22	TSEG21	TSEG20	TSEG13	TSEG12	TSEG11	TSEG10
0x01C4	CAN2RFLG	R	WUPIF	CSCIF	RSTAT1	RSTAT0	TSTAT1	TSTAT0	OVRIF	RXF
		W								
0x01C5	CAN2RIER	R W	WUPIE	CSCIE	RSTATE1	RSTATE0	TSTATE1	TSTATE0	OVRIE	RXFIE
0x01C6	CAN2TFLG	R	0	0	0	0	0	TXE2	TXE1	TXE0
		W								
0x01C7	CAN2TIER	R	0	0	0	0	0	TXEIE2	TXEIE1	TXEIE0
		W								
0x01C8	CAN2TARQ	R	0	0	0	0	0	ABTRQ2	ABTRQ1	ABTRQ0
		W								
0x01C9	CAN2TAAK	R	0	0	0	0	0	ABTAK2	ABTAK1	ABTAK0
		W								
0x01CA	CAN2TBSEL	R	0	0	0	0	0	TX2	TX1	TX0
		W								
0x01CB	CAN2IDAC	R	0	0	IDAM1	IDAM0	0	IDHIT2	IDHIT1	IDHIT0
		W								
0x01CC	Reserved	R	0	0	0	0	0	0	0	0
		W								
0x01CD	CAN2MISC	R	0	0	0	0	0	0	0	BOHOLD
		W								
0x01CE	CAN2RXERR	R	RXERR7	RXERR6	RXERR5	RXERR4	RXERR3	RXERR2	RXERR1	RXERR0
		W								
0x01CF	CAN2TXERR	R	TXERR7	TXERR6	TXERR5	TXERR4	TXERR3	TXERR2	TXERR1	TXERR0
		W								
0x01D0	CAN2IDAR0	R W	AC7	AC6	AC5	AC4	AC3	AC2	AC1	AC0

0x01C0–0x01FF Freescale Scalable CAN — MSCAN (CAN2) Map (continued)

Address	Name		Bit 7	Bit 6	Bit 5	Bit 4	Bit 3	Bit 2	Bit 1	Bit 0
0x01D1	CAN2IDAR1	R W	AC7	AC6	AC5	AC4	AC3	AC2	AC1	AC0
0x01D2	CAN2IDAR2	R W	AC7	AC6	AC5	AC4	AC3	AC2	AC1	AC0
0x01D3	CAN2IDAR3	R W	AC7	AC6	AC5	AC4	AC3	AC2	AC1	AC0
0x01D4	CAN2IDMR0	R W	AM7	AM6	AM5	AM4	AM3	AM2	AM1	AM0
0x01D5	CAN2IDMR1	R W	AM7	AM6	AM5	AM4	AM3	AM2	AM1	AM0
0x01D6	CAN2IDMR2	R W	AM7	AM6	AM5	AM4	AM3	AM2	AM1	AM0
0x01D7	CAN2IDMR3	R W	AM7	AM6	AM5	AM4	AM3	AM2	AM1	AM0
0x01D8	CAN2IDAR4	R W	AC7	AC6	AC5	AC4	AC3	AC2	AC1	AC0
0x01D9	CAN2IDAR5	R W	AC7	AC6	AC5	AC4	AC3	AC2	AC1	AC0
0x01DA	CAN2IDAR6	R W	AC7	AC6	AC5	AC4	AC3	AC2	AC1	AC0
0x01DB	CAN2IDAR7	R W	AC7	AC6	AC5	AC4	AC3	AC2	AC1	AC0
0x01DC	CAN2IDMR4	R W	AM7	AM6	AM5	AM4	AM3	AM2	AM1	AM0
0x01DD	CAN2IDMR5	R W	AM7	AM6	AM5	AM4	AM3	AM2	AM1	AM0
0x01DE	CAN2IDMR6	R W	AM7	AM6	AM5	AM4	AM3	AM2	AM1	AM0
0x01DF	CAN2IDMR7	R W	AM7	AM6	AM5	AM4	AM3	AM2	AM1	AM0
0x01E0– 0x01EF	CAN2RXFG	R	FOREGROUND RECEIVE BUFFER (See Detailed MSCAN Foreground Receive and Transmit Buffer Layout)							
		W								
0x01F0– 0x01FF	CAN2TXFG	R W	FOREGROUND TRANSMIT BUFFER (See Detailed MSCAN Foreground Receive and Transmit Buffer Layout)							

0x0200–0x023F Freescale Scalable CAN — MSCAN (CAN3)

Address	Name		Bit 7	Bit 6	Bit 5	Bit 4	Bit 3	Bit 2	Bit 1	Bit 0
0x0200	CAN3CTL0	R	RXFRM	RXACT	CSWAI	SYNCH	TIME	WUPE	SLPRQ	INITRQ
		W								
0x0201	CAN3CTL1	R	CANE	CLKSRC	LOOPB	LISTEN	BORM	WUPM	SLPAK	INITAK
		W								
0x0202	CAN3BTR0	R	SJW1	SJW0	BRP5	BRP4	BRP3	BRP2	BRP1	BRP0
		W								
0x0203	CAN3BTR1	R	SAMP	TSEG22	TSEG21	TSEG20	TSEG13	TSEG12	TSEG11	TSEG10
		W								
0x0204	CAN3RFLG	R	WUPIF	CSCIF	RSTAT1	RSTAT0	TSTAT1	TSTAT0	OVRIF	RXF
		W								
0x0205	CAN3RIER	R	WUPIE	CSCIE	RSTATE1	RSTATE0	TSTATE1	TSTATE0	OVRIE	RXFIE
		W								
0x0206	CAN3TFLG	R	0	0	0	0	0	TXE2	TXE1	TXE0
		W								
0x0207	CAN3TIER	R	0	0	0	0	0	TXEIE2	TXEIE1	TXEIE0
		W								
0x0208	CAN3TARQ	R	0	0	0	0	0	ABTRQ2	ABTRQ1	ABTRQ0
		W								
0x0209	CAN3TAAK	R	0	0	0	0	0	ABTAK2	ABTAK1	ABTAK0
		W								
0x020A	CAN3TBSEL	R	0	0	0	0	0	TX2	TX1	TX0
		W								
0x020B	CAN3IDAC	R	0	0	IDAM1	IDAM0	0	IDHIT2	IDHIT1	IDHIT0
		W								
0x020C	Reserved	R	0	0	0	0	0	0	0	0
		W								
0x020D	Reserved	R	0	0	0	0	0	0	0	BOHOLD
		W								
0x020E	CAN3RXERR	R	RXERR7	RXERR6	RXERR5	RXERR4	RXERR3	RXERR2	RXERR1	RXERR0
		W								
0x020F	CAN3TXERR	R	TXERR7	TXERR6	TXERR5	TXERR4	TXERR3	TXERR2	TXERR1	TXERR0
		W								
0x0210	CAN3IDAR0	R	AC7	AC6	AC5	AC4	AC3	AC2	AC1	AC0
		W								
0x0211	CAN3IDAR1	R	AC7	AC6	AC5	AC4	AC3	AC2	AC1	AC0
		W								
0x0212	CAN3IDAR2	R	AC7	AC6	AC5	AC4	AC3	AC2	AC1	AC0
		W								
0x0213	CAN3IDAR3	R	AC7	AC6	AC5	AC4	AC3	AC2	AC1	AC0
		W								
0x0214	CAN3IDMR0	R	AM7	AM6	AM5	AM4	AM3	AM2	AM1	AM0
		W								
0x0215	CAN3IDMR1	R	AM7	AM6	AM5	AM4	AM3	AM2	AM1	AM0
		W								

0x0200–0x023F Freescale Scalable CAN — MSCAN (CAN3) (continued)

Address	Name		Bit 7	Bit 6	Bit 5	Bit 4	Bit 3	Bit 2	Bit 1	Bit 0
0x0216	CAN3IDMR2	R/W	AM7	AM6	AM5	AM4	AM3	AM2	AM1	AM0
0x0217	CAN3IDMR3	R/W	AM7	AM6	AM5	AM4	AM3	AM2	AM1	AM0
0x0218	CAN3IDAR4	R/W	AC7	AC6	AC5	AC4	AC3	AC2	AC1	AC0
0x0219	CAN3IDAR5	R/W	AC7	AC6	AC5	AC4	AC3	AC2	AC1	AC0
0x021A	CAN3IDAR6	R/W	AC7	AC6	AC5	AC4	AC3	AC2	AC1	AC0
0x021B	CAN3IDAR7	R/W	AC7	AC6	AC5	AC4	AC3	AC2	AC1	AC0
0x021C	CAN3IDMR4	R/W	AM7	AM6	AM5	AM4	AM3	AM2	AM1	AM0
0x021D	CAN3IDMR5	R/W	AM7	AM6	AM5	AM4	AM3	AM2	AM1	AM0
0x021E	CAN3IDMR6	R/W	AM7	AM6	AM5	AM4	AM3	AM2	AM1	AM0
0x021F	CAN3IDMR7	R/W	AM7	AM6	AM5	AM4	AM3	AM2	AM1	AM0
0x0220–0x022F	CAN3RXFG	R	FOREGROUND RECEIVE BUFFER (See Detailed MSCAN Foreground Receive and Transmit Buffer Layout)							
		W								
0x0230–0x023F	CAN3TXFG	R/W	FOREGROUND TRANSMIT BUFFER (See Detailed MSCAN Foreground Receive and Transmit Buffer Layout)							

0x0240–0x027F Port Integration Module PIM_9DX (PIM) Map (Sheet 1 of 4)

Address	Name		Bit 7	Bit 6	Bit 5	Bit 4	Bit 3	Bit 2	Bit 1	Bit 0
0x0240	PTT	R/W	PTT7	PTT6	PTT5	PTT4	PTT3	PTT2	PTT1	PTT0
0x0241	PTIT	R	PTIT7	PTIT6	PTIT5	PTIT4	PTIT3	PTIT2	PTIT1	PTIT0
		W								
0x0242	DDRT	R/W	DDRT7	DDRT7	DDRT5	DDRT4	DDRT3	DDRT2	DDRT1	DDRT0
0x0243	RDRT	R/W	RDRT7	RDRT6	RDRT5	RDRT4	RDRT3	RDRT2	RDRT1	RDRT0
0x0244	PERT	R/W	PERT7	PERT6	PERT5	PERT4	PERT3	PERT2	PERT1	PERT0
0x0245	PPST	R/W	PPST7	PPST6	PPST5	PPST4	PPST3	PPST2	PPST1	PPST0
0x0246	Reserved	R	0	0	0	0	0	0	0	0
		W								
0x0247	Reserved	R	0	0	0	0	0	0	0	0
		W								

0x0240–0x027F Port Integration Module PIM_9DX (PIM) Map (Sheet 2 of 4)

Address	Name		Bit 7	Bit 6	Bit 5	Bit 4	Bit 3	Bit 2	Bit 1	Bit 0
0x0248	PTS	R/W	PTS7	PTS6	PTS5	PTS4	PTS3	PTS2	PTS1	PTS0
0x0249	PTIS	R	PTIS7	PTIS6	PTIS5	PTIS4	PTIS3	PTIS2	PTIS1	PTIS0
		W								
0x024A	DDRS	R/W	DDRS7	DDRS7	DDRS5	DDRS4	DDRS3	DDRS2	DDRS1	DDRS0
0x024B	RDRS	R/W	RDRS7	RDRS6	RDRS5	RDRS4	RDRS3	RDRS2	RDRS1	RDRS0
0x024C	PERS	R/W	PERS7	PERS6	PERS5	PERS4	PERS3	PERS2	PERS1	PERS0
0x024D	PPSS	R/W	PPSS7	PPSS6	PPSS5	PPSS4	PPSS3	PPSS2	PPSS1	PPSS0
0x024E	WOMS	R/W	WOMS7	WOMS6	WOMS5	WOMS4	WOMS3	WOMS2	WOMS1	WOMS0
0x024F	Reserved	R	0	0	0	0	0	0	0	0
		W								
0x0250	PTM	R/W	PTM7	PTM6	PTM5	PTM4	PTM3	PTM2	PTM1	PTM0
0x0251	PTIM	R	PTIM7	PTIM6	PTIM5	PTIM4	PTIM3	PTIM2	PTIM1	PTIM0
		W								
0x0252	DDRM	R/W	DDRM7	DDRM7	DDRM5	DDRM4	DDRM3	DDRM2	DDRM1	DDRM0
0x0253	RDRM	R/W	RDRM7	RDRM6	RDRM5	RDRM4	RDRM3	RDRM2	RDRM1	RDRM0
0x0254	PERM	R/W	PERM7	PERM6	PERM5	PERM4	PERM3	PERM2	PERM1	PERM0
0x0255	PPSM	R/W	PPSM7	PPSM6	PPSM5	PPSM4	PPSM3	PPSM2	PPSM1	PPSM0
0x0256	WOMM	R/W	WOMM7	WOMM6	WOMM5	WOMM4	WOMM3	WOMM2	WOMM1	WOMM0
0x0257	MODRR	R	0	MODRR6	MODRR5	MODRR4	MODRR3	MODRR2	MODRR1	MODRR0
		W								
0x0258	PTP	R/W	PTP7	PTP6	PTP5	PTP4	PTP3	PTP2	PTP1	PTP0
0x0259	PTIP	R	PTIP7	PTIP6	PTIP5	PTIP4	PTIP3	PTIP2	PTIP1	PTIP0
		W								
0x025A	DDRP	R/W	DDRP7	DDRP7	DDRP5	DDRP4	DDRP3	DDRP2	DDRP1	DDRP0
0x025B	RDRP	R/W	RDRP7	RDRP6	RDRP5	RDRP4	RDRP3	RDRP2	RDRP1	RDRP0
0x025C	PERP	R/W	PERP7	PERP6	PERP5	PERP4	PERP3	PERP2	PERP1	PERP0
0x025D	PPSP	R/W	PPSP7	PPSP6	PPSP5	PPSP4	PPSP3	PPSP2	PPSP1	PPSS0
0x025E	PIEP	R/W	PIEP7	PIEP6	PIEP5	PIEP4	PIEP3	PIEP2	PIEP1	PIEP0
0x025F	PIFP	R/W	PIFP7	PIFP6	PIFP5	PIFP4	PIFP3	PIFP2	PIFP1	PIFP0

0x0240–0x027F Port Integration Module PIM_9DX (PIM) Map (Sheet 3 of 4)

Address	Name		Bit 7	Bit 6	Bit 5	Bit 4	Bit 3	Bit 2	Bit 1	Bit 0
0x0260	PTH	R/W	PTH7	PTH6	PTH5	PTH4	PTH3	PTH2	PTH1	PTH0
0x0261	PTIH	R	PTIH7	PTIH6	PTIH5	PTIH4	PTIH3	PTIH2	PTIH1	PTIH0
		W								
0x0262	DDRH	R/W	DDRH7	DDRH7	DDRH5	DDRH4	DDRH3	DDRH2	DDRH1	DDRH0
0x0263	RDRH	R/W	RDRH7	RDRH6	RDRH5	RDRH4	RDRH3	RDRH2	RDRH1	RDRH0
0x0264	PERH	R/W	PERH7	PERH6	PERH5	PERH4	PERH3	PERH2	PERH1	PERH0
0x0265	PPSH	R/W	PPSH7	PPSH6	PPSH5	PPSH4	PPSH3	PPSH2	PPSH1	PPSH0
0x0266	PIEH	R/W	PIEH7	PIEH6	PIEH5	PIEH4	PIEH3	PIEH2	PIEH1	PIEH0
0x0267	PIFH	R/W	PIFH7	PIFH6	PIFH5	PIFH4	PIFH3	PIFH2	PIFH1	PIFH0
0x0268	PTJ	R/W	PTJ7	PTJ6	PTJ5	PTJ4	0	PTJ2	PTJ1	PTJ0
0x0269	PTIJ	R	PTIJ7	PTIJ6	PTIJ5	PTIJ4	0	PTIJ2	PTIJ1	PTIJ0
		W								
0x026A	DDRJ	R/W	DDRJ7	DDRJ7	DDRJ5	DDRJ4	0	DDRJ2	DDRJ1	DDRJ0
0x026B	RDRJ	R/W	RDRJ7	RDRJ6	RDRJ5	RDRJ4	0	RDRJ2	RDRJ1	RDRJ0
0x026C	PERJ	R/W	PERJ7	PERJ6	PERJ5	PERJ4	0	PERJ2	PERJ1	PERJ0
0x026D	PPSJ	R/W	PPSJ7	PPSJ6	PPSJ5	PPSJ4	0	PPSJ2	PPSJ1	PPSJ0
0x026E	PIEJ	R/W	PIEJ7	PIEJ6	PIEJ5	PIEJ4	0	PIEJ2	PIEJ1	PIEJ0
0x026F	PIFJ	R/W	PIFJ7	PIFJ6	PIFJ5	PIFJ4	0	PIFJ2	PIFJ1	PIFJ0
0x0270	Reserved	R	0	0	0	0	0	0	0	0
		W								
0x0271	PT1AD0	R/W	PT1AD07	PT1AD06	PT1AD05	PT1AD04	PT1AD03	PT1AD02	PT1AD01	PT1AD00
0x0272	Reserved	R	0	0	0	0	0	0	0	0
		W								
0x0273	DDR1AD0	R/W	DDR1AD07	DDR1AD06	DDR1AD05	DDR1AD04	DDR1AD03	DDR1AD02	DDR1AD01	DDR1AD01
0x0274	Reserved	R	0	0	0	0	0	0	0	0
		W								
0x0275	RDR1AD0	R/W	RDR1AD07	RDR1AD06	RDR1AD05	RDR1AD04	RDR1AD03	RDR1AD02	RDR1AD01	RDR1AD00
0x0276	Reserved	R	0	0	0	0	0	0	0	0
		W								
0x0277	PER1AD0	R/W	PER1AD07	PER1AD06	PER1AD05	PER1AD04	PER1AD03	PER1AD02	PER1AD01	PER1AD00

0x0240–0x027F Port Integration Module PIM_9DX (PIM) Map (Sheet 4 of 4)

Address	Name		Bit 7	Bit 6	Bit 5	Bit 4	Bit 3	Bit 2	Bit 1	Bit 0
0x0278	PT0AD1	R/W	PT0AD1 23	PT0AD1 22	PT0AD1 21	PT0AD1 20	PT0AD1 19	PT0AD1 18	PT0AD1 17	PT0AD1 16
0x0279	PT1AD1	R/W	PT1AD1 15	PT1AD1 14	PT1AD1 13	PT1AD1 12	PT1AD1 11	PT1AD1 10	PT1AD1 9	PT1AD1 8
0x027A	DDR0AD1	R/W	DDR0AD1 23	DDR0AD1 22	DDR0AD1 21	DDR0AD1 20	DDR0AD1 19	DDR0AD1 18	DDR0AD1 17	DDR0AD1 16
0x027B	DDR1AD1	R/W	DDR1AD1 15	DDR1AD1 14	DDR1AD1 13	DDR1AD1 12	DDR1AD1 11	DDR1AD1 10	DDR1AD1 9	DDR1AD1 8
0x027C	RDR0AD1	R/W	RDR0AD1 23	RDR0AD1 22	RDR0AD1 21	RDR0AD1 20	RDR0AD1 19	RDR0AD1 18	RDR0AD1 17	RDR0AD1 16
0x027D	RDR1AD1	R/W	RDR1AD1 15	RDR1AD1 14	RDR1AD1 13	RDR1AD1 12	RDR1AD1 11	RDR1AD1 10	RDR1AD1 9	RDR1AD1 8
0x027E	PER0AD1	R/W	PER0AD1 23	PER0AD1 22	PER0AD1 21	PER0AD1 20	PER0AD1 19	PER0AD1 18	PER0AD1 17	PER0AD1 16
0x027F	PER1AD1	R/W	PER1AD1 15	PER1AD1 14	PER1AD1 13	PER1AD1 12	PER1AD1 11	PER1A1D 10	PER1AD1 9	PER1AD1 8

0x0280–0x02BF Freescale Scalable CAN — MSCAN (CAN4) Map

Address	Name		Bit 7	Bit 6	Bit 5	Bit 4	Bit 3	Bit 2	Bit 1	Bit 0
0x0280	CAN4CTL0	R	RXFRM	RXACT	CSWAI	SYNCH	TIME	WUPE	SLPRQ	INITRQ
		W								
0x0281	CAN4CTL1	R	CANE	CLKSRC	LOOPB	LISTEN	BORM	WUPM	SLPAK	INITAK
		W								
0x0282	CAN4BTR0	R	SJW1	SJW0	BRP5	BRP4	BRP3	BRP2	BRP1	BRP0
		W								
0x0283	CAN4BTR1	R	SAMP	TSEG22	TSEG21	TSEG20	TSEG13	TSEG12	TSEG11	TSEG10
		W								
0x0284	CAN4RFLG	R	WUPIF	CSCIF	RSTAT1	RSTAT0	TSTAT1	TSTAT0	OVRIF	RXF
		W								
0x0285	CAN4RIER	R	WUPIE	CSCIE	RSTATE1	RSTATE0	TSTATE1	TSTATE0	OVRIE	RXFIE
		W								
0x0286	CAN4TFLG	R	0	0	0	0	0	TXE2	TXE1	TXE0
		W								
0x0287	CAN4TIER	R	0	0	0	0	0	TXEIE2	TXEIE1	TXEIE0
		W								
0x0288	CAN4TARQ	R	0	0	0	0	0	ABTRQ2	ABTRQ1	ABTRQ0
		W								
0x0289	CAN4TAAK	R	0	0	0	0	0	ABTAK2	ABTAK1	ABTAK0
		W								
0x028A	CAN4TBSEL	R	0	0	0	0	0	TX2	TX1	TX0
		W								
0x028B	CAN4IDAC	R	0	0	IDAM1	IDAM0	0	IDHIT2	IDHIT1	IDHIT0
		W								
0x028C	Reserved	R	0	0	0	0	0	0	0	0
		W								

0x0280–0x02BF Freescale Scalable CAN — MSCAN (CAN4) Map (continued)

Address	Name		Bit 7	Bit 6	Bit 5	Bit 4	Bit 3	Bit 2	Bit 1	Bit 0
0x028D	CAN4MISC	R	0	0	0	0	0	0	0	BOHOLD
		W								
0x028E	CAN4RXERR	R	RXERR7	RXERR6	RXERR5	RXERR4	RXERR3	RXERR2	RXERR1	RXERR0
		W								
0x028F	CAN4TXERR	R	TXERR7	TXERR6	TXERR5	TXERR4	TXERR3	TXERR2	TXERR1	TXERR0
		W								
0x0290	CAN4IDAR0	R/W	AC7	AC6	AC5	AC4	AC3	AC2	AC1	AC0
0x0291	CAN4IDAR1	R/W	AC7	AC6	AC5	AC4	AC3	AC2	AC1	AC0
0x0292	CAN4IDAR2	R/W	AC7	AC6	AC5	AC4	AC3	AC2	AC1	AC0
0x0293	CAN4IDAR3	R/W	AC7	AC6	AC5	AC4	AC3	AC2	AC1	AC0
0x0294	CAN4IDMR0	R/W	AM7	AM6	AM5	AM4	AM3	AM2	AM1	AM0
0x0295	CAN4IDMR1	R/W	AM7	AM6	AM5	AM4	AM3	AM2	AM1	AM0
0x0296	CAN4IDMR2	R/W	AM7	AM6	AM5	AM4	AM3	AM2	AM1	AM0
0x0297	CAN4IDMR3	R/W	AM7	AM6	AM5	AM4	AM3	AM2	AM1	AM0
0x0298	CAN4IDAR4	R/W	AC7	AC6	AC5	AC4	AC3	AC2	AC1	AC0
0x0299	CAN4IDAR5	R/W	AC7	AC6	AC5	AC4	AC3	AC2	AC1	AC0
0x029A	CAN4IDAR6	R/W	AC7	AC6	AC5	AC4	AC3	AC2	AC1	AC0
0x029B	CAN4IDAR7	R/W	AC7	AC6	AC5	AC4	AC3	AC2	AC1	AC0
0x029C	CAN4IDMR4	R/W	AM7	AM6	AM5	AM4	AM3	AM2	AM1	AM0
0x029D	CAN4IDMR5	R/W	AM7	AM6	AM5	AM4	AM3	AM2	AM1	AM0
0x029E	CAN4IDMR6	R/W	AM7	AM6	AM5	AM4	AM3	AM2	AM1	AM0
0x029F	CAN4IDMR7	R/W	AM7	AM6	AM5	AM4	AM3	AM2	AM1	AM0
0x02A0–0x02AF	CAN4RXFG	R	FOREGROUND RECEIVE BUFFER (See Detailed MSCAN Foreground Receive and Transmit Buffer Layout)							
		W								
0x02B0–0x02BF	CAN4TXFG	R/W	FOREGROUND TRANSMIT BUFFER (See Detailed MSCAN Foreground Receive and Transmit Buffer Layout)							

0x02C0–0x02DF Analog-to-Digital Converter 10-Bit 8-Channel (ATD0) Map

Address	Name		Bit 7	Bit 6	Bit 5	Bit 4	Bit 3	Bit 2	Bit 1	Bit 0
0x02C0	ATD0CTL0	R	0	0	0	0	0	WRAP2	WRAP1	WRAP0
		W								
0x02C1	ATD0CTL1	R	ETRIG SEL	0	0	0	0	ETRIG CH2	ETRIG CH1	ETRIG CH0
		W								
0x02C2	ATD0CTL2	R	ADPU	AFFC	AWAI	ETRIGLE	ETRIGP	ETRIGE	ASCIE	ASCIF
		W								
0x02C3	ATD0CTL3	R	0	S8C	S4C	S2C	S1C	FIFO	FRZ1	FRZ0
		W								
0x02C4	ATD0CTL4	R	SRES8	SMP1	SMP0	PRS4	PRS3	PRS2	PRS1	PRS0
		W								
0x02C5	ATD0CTL5	R	DJM	DSGN	SCAN	MULT	0	CC	CB	CA
		W								
0x02C6	ATD0STAT0	R	SCF	0	ETORF	FIFOR	0	CC2	CC1	CC0
		W								
0x02C7	Reserved	R	U	U	U	U	U	U	U	U
		W								
0x02C8	ATD0TEST0	R	U	U	U	U	U	U	U	U
		W								
0x02C9	ATD0TEST1	R	U	U	0	0	0	0	0	SC
		W								
0x02CA	Reserved	R	0	0	0	0	0	0	0	0
		W								
0x02CB	ATD0STAT1	R	CCF7	CCF6	CCF5	CCF4	CCF3	CCF2	CCF1	CCF0
		W								
0x02CC	Reserved	R	0	0	0	0	0	0	0	0
		W								
0x02CD	ATD0DIEN	R	IEN7	IEN6	IEN5	IEN4	IEN3	IEN2	IEN1	IEN0
		W								
0x02CE	Reserved	R	0	0	0	0	0	0	0	0
		W								
0x02CF	ATD0PTAD0	R	Bit7	6	5	4	3	2	1	BIT 0
		W								
0x02D0	ATD0DR0H	R	Bit15	14	13	12	11	10	9	Bit8
		W								
0x02D1	ATD0DR0L	R	Bit7	Bit6	0	0	0	0	0	0
		W								
0x02D2	ATD0DR1H	R	Bit15	14	13	12	11	10	9	Bit8
		W								
0x02D3	ATD0DR1L	R	Bit7	Bit6	0	0	0	0	0	0
		W								
0x02D4	ATD0DR2H	R	Bit15	14	13	12	11	10	9	Bit8
		W								
0x02D5	ATD0DR2L	R	Bit7	Bit6	0	0	0	0	0	0
		W								

0x02C0–0x02DF Analog-to-Digital Converter 10-Bit 8-Channel (ATD0) Map (continued)

Address	Name		Bit 7	Bit 6	Bit 5	Bit 4	Bit 3	Bit 2	Bit 1	Bit 0
0x02D6	ATD0DR3H	R	Bit15	14	13	12	11	10	9	Bit8
		W								
0x02D7	ATD0DR3L	R	Bit7	Bit6	0	0	0	0	0	0
		W								
0x02D8	ATD0DR4H	R	Bit15	14	13	12	11	10	9	Bit8
		W								
0x02D9	ATD0DR4L	R	Bit7	Bit6	0	0	0	0	0	0
		W								
0x02DA	ATD0DR5H	R	Bit15	14	13	12	11	10	9	Bit8
		W								
0x02DB	ATD0DR5L	R	Bit7	Bit6	0	0	0	0	0	0
		W								
0x02DC	ATD0DR6H	R	Bit15	14	13	12	11	10	9	Bit8
		W								
0x02DD	ATD0DR6L	R	Bit7	Bit6	0	0	0	0	0	0
		W								
0x02DE	ATD0DR7H	R	Bit15	14	13	12	11	10	9	Bit8
		W								
0x02DF	ATD0DR7L	R	Bit7	Bit6	0	0	0	0	0	0
		W								

0x02E0–0x02EF Reserved

Address	Name		Bit 7	Bit 6	Bit 5	Bit 4	Bit 3	Bit 2	Bit 1	Bit 0
0x02E0–0x02EF	Reserved	R	0	0	0	0	0	0	0	0
		W								

0x02F0–0x02F7 Voltage Regulator (VREG_3V3) Map

Address	Name		Bit 7	Bit 6	Bit 5	Bit 4	Bit 3	Bit 2	Bit 1	Bit 0
0x02F0	VREGHTCL	R	Reserved for Factory Test							
		W								
0x02F1	VREGCTRL	R	0	0	0	0	0	LVDS	LVIE	LVIF
		W								
0x02F2	VREGAPICL	R	APICLK	0	0	0	0	APIFE	APIE	APIF
		W								
0x02F3	VREGAPITR	R	APITR5	APITR4	APITR3	APITR2	APITR1	APITR0	0	0
		W								
0x02F4	VREGAPIRH	R	0	0	0	0	APIR11	APIR10	APIR9	APIR8
		W								
0x02F5	VREGAPIRL	R	APIR7	APIR6	APIR5	APIR4	APIR3	APIR2	APIR1	APIR0
		W								
0x02F6	Reserved	R	0	0	0	0	0	0	0	0
		W								
0x02F7	Reserved	R	0	0	0	0	0	0	0	0
		W								

0x02F8–0x02FF Reserved

Address	Name		Bit 7	Bit 6	Bit 5	Bit 4	Bit 3	Bit 2	Bit 1	Bit 0
0x02F8–0x02FF	Reserved	R	0	0	0	0	0	0	0	0
		W								

0x0300–0x0327 Pulse Width Modulator 8-Bit 8-Channel (PWM) Map

Address	Name		Bit 7	Bit 6	Bit 5	Bit 4	Bit 3	Bit 2	Bit 1	Bit 0
0x0300	PWME	R/W	PWME7	PWME6	PWME5	PWME4	PWME3	PWME2	PWME1	PWME0
0x0301	PWMPOL	R/W	PPOL7	PPOL6	PPOL5	PPOL4	PPOL3	PPOL2	PPOL1	PPOL0
0x0302	PWMCLK	R/W	PCLK7	PCLK6	PCLK5	PCLK4	PCLK3	PCLK2	PCLK1	PCLK0
0x0303	PWMPRCLK	R	0	PCKB2	PCKB1	PCKB0	0	PCKA2	PCKA1	PCKA0
		W								
0x0304	PWMCAE	R/W	CAE7	CAE6	CAE5	CAE4	CAE3	CAE2	CAE1	CAE0
0x0305	PWMCTL	R/W	CON67	CON45	CON23	CON01	PSWAI	PFRZ	0	0
0x0306	PWMTST Test Only	R	0	0	0	0	0	0	0	0
		W								
0x0307	PWMPRSC	R	0	0	0	0	0	0	0	0
		W								
0x0308	PWMSCLA	R/W	Bit 7	6	5	4	3	2	1	Bit 0
0x0309	PWMSCLB	R/W	Bit 7	6	5	4	3	2	1	Bit 0
0x030A	PWMSCNTA	R	0	0	0	0	0	0	0	0
		W								
0x030B	PWMSCNTB	R	0	0	0	0	0	0	0	0
		W								
0x030C	PWMCNT0	R	Bit 7	6	5	4	3	2	1	Bit 0
		W	0	0	0	0	0	0	0	0
0x030D	PWMCNT1	R	Bit 7	6	5	4	3	2	1	Bit 0
		W	0	0	0	0	0	0	0	0
0x030E	PWMCNT2	R	Bit 7	6	5	4	3	2	1	Bit 0
		W	0	0	0	0	0	0	0	0
0x030F	PWMCNT3	R	Bit 7	6	5	4	3	2	1	Bit 0
		W	0	0	0	0	0	0	0	0
0x0310	PWMCNT4	R	Bit 7	6	5	4	3	2	1	Bit 0
		W	0	0	0	0	0	0	0	0
0x0311	PWMCNT5	R	Bit 7	6	5	4	3	2	1	Bit 0
		W	0	0	0	0	0	0	0	0
0x0312	PWMCNT6	R	Bit 7	6	5	4	3	2	1	Bit 0
		W	0	0	0	0	0	0	0	0
0x0313	PWMCNT7	R	Bit 7	6	5	4	3	2	1	Bit 0
		W	0	0	0	0	0	0	0	0

0x0300–0x0327 Pulse Width Modulator 8-Bit 8-Channel (PWM) Map

Address	Name		Bit 7	Bit 6	Bit 5	Bit 4	Bit 3	Bit 2	Bit 1	Bit 0
0x0314	PWMPER0	R W	Bit 7	6	5	4	3	2	1	Bit 0
0x0315	PWMPER1	R W	Bit 7	6	5	4	3	2	1	Bit 0
0x0316	PWMPER2	R W	Bit 7	6	5	4	3	2	1	Bit 0
0x0317	PWMPER3	R W	Bit 7	6	5	4	3	2	1	Bit 0
0x0318	PWMPER4	R W	Bit 7	6	5	4	3	2	1	Bit 0
0x0319	PWMPER5	R W	Bit 7	6	5	4	3	2	1	Bit 0
0x031A	PWMPER6	R W	Bit 7	6	5	4	3	2	1	Bit 0
0x031B	PWMPER7	R W	Bit 7	6	5	4	3	2	1	Bit 0
0x031C	PWMDTY0	R W	Bit 7	6	5	4	3	2	1	Bit 0
0x031D	PWMDTY1	R W	Bit 7	6	5	4	3	2	1	Bit 0
0x031E	PWMDTY2	R W	Bit 7	6	5	4	3	2	1	Bit 0
0x031F	PWMDTY3	R W	Bit 7	6	5	4	3	2	1	Bit 0
0x0320	PWMDTY4	R W	Bit 7	6	5	4	3	2	1	Bit 0
0x0321	PWMDTY5	R W	Bit 7	6	5	4	3	2	1	Bit 0
0x0322	PWMDTY6	R W	Bit 7	6	5	4	3	2	1	Bit 0
0x0323	PWMDTY7	R W	Bit 7	6	5	4	3	2	1	Bit 0
0x0324	PWMSDN	R W	PWMIF	PWMIE	0 PWM RSTRT	PWMLVL	0	PWM7IN	PWM7INL	PWM7 ENA
0x0325	Reserved	R W	0	0	0	0	0	0	0	0
0x0326	Reserved	R W	0	0	0	0	0	0	0	0
0x0327	Reserved	R W	0	0	0	0	0	0	0	0

0x0328–0x033F Reserved

Address	Name		Bit 7	Bit 6	Bit 5	Bit 4	Bit 3	Bit 2	Bit 1	Bit 0
0x0328–0x033F	Reserved	R	0	0	0	0	0	0	0	0
		W								

0x0340–0x0367 Periodic Interrupt Timer (PIT) Map

Address	Name		Bit 7	Bit 6	Bit 5	Bit 4	Bit 3	Bit 2	Bit 1	Bit 0
0x0340	PITCFLMT	R	PITE	PITSWAI	PITFRZ	0	0	0	0	0
		W							PFLMT1	PFLMT0
0x0341	PITFLT	R	0	0	0	0	0	0	0	0
		W					PFLT3	PFLT2	PFLT1	PFLT0
0x0342	PITCE	R	0	0	0	0	PCE3	PCE2	PCE1	PCE0
		W								
0x0343	PITMUX	R	0	0	0	0	PMUX3	PMUX2	PMUX1	PMUX0
		W								
0x0344	PITINTE	R	0	0	0		PINTE3	PINTE2	PINTE1	PINTE0
		W								
0x0345	PITTF	R	0	0	0	0	PTF3	PTF2	PTF1	PTF0
		W								
0x0346	PITMTLD0	R/W	PMTLD7	PMTLD6	PMTLD5	PMTLD4	PMTLD3	PMTLD2	PMTLD1	PMTLD0
0x0347	PITMTLD1	R/W	PMTLD7	PMTLD6	PMTLD5	PMTLD4	PMTLD3	PMTLD2	PMTLD1	PMTLD0
0x0348	PITLD0 (hi)	R/W	PLD15	PLD14	PLD13	PLD12	PLD11	PLD10	PLD9	PLD8
0x0349	PITLD0 (lo)	R/W	PLD7	PLD6	PLD5	PLD4	PLD3	PLD2	PLD1	PLD0
0x034A	PITCNT0 (hi)	R/W	PCNT15	PCNT14	PCNT13	PCNT12	PCNT11	PCNT10	PCNT9	PCNT8
0x034B	PITCNT0 (lo)	R/W	PCNT7	PCNT6	PCNT5	PCNT4	PCNT3	PCNT2	PCNT1	PCNT0
0x034C	PITLD1 (hi)	R/W	PLD15	PLD14	PLD13	PLD12	PLD11	PLD10	PLD9	PLD8
0x034D	PITLD1 (lo)	R/W	PLD7	PLD6	PLD5	PLD4	PLD3	PLD2	PLD1	PLD0
0x034E	PITCNT1 (hi)	R/W	PCNT15	PCNT14	PCNT13	PCNT12	PCNT11	PCNT10	PCNT9	PCNT8
0x034F	PITCNT1 (lo)	R/W	PCNT7	PCNT6	PCNT5	PCNT4	PCNT3	PCNT2	PCNT1	PCNT0
0x0350	PITLD2 (hi)	R/W	PLD15	PLD14	PLD13	PLD12	PLD11	PLD10	PLD9	PLD8
0x0351	PITLD2 (lo)	R/W	PLD7	PLD6	PLD5	PLD4	PLD3	PLD2	PLD1	PLD0
0x0352	PITCNT2 (hi)	R/W	PCNT15	PCNT14	PCNT13	PCNT12	PCNT11	PCNT10	PCNT9	PCNT8
0x0353	PITCNT2 (lo)	R/W	PCNT7	PCNT6	PCNT5	PCNT4	PCNT3	PCNT2	PCNT1	PCNT0

0x0340–0x0367 Periodic Interrupt Timer (PIT) Map (continued)

Address	Name		Bit 7	Bit 6	Bit 5	Bit 4	Bit 3	Bit 2	Bit 1	Bit 0
0x0354	PITLD3 (hi)	R/W	PLD15	PLD14	PLD13	PLD12	PLD11	PLD10	PLD9	PLD8
0x0355	PITLD3 (lo)	R/W	PLD7	PLD6	PLD5	PLD4	PLD3	PLD2	PLD1	PLD0
0x0356	PITCNT3 (hi)	R/W	PCNT15	PCNT14	PCNT13	PCNT12	PCNT11	PCNT10	PCNT9	PCNT8
0x0357	PITCNT3 (lo)	R/W	PCNT7	PCNT6	PCNT5	PCNT4	PCNT3	PCNT2	PCNT1	PCNT0
0x0358–0x0367	Reserved	R	0	0	0	0	0	0	0	0
		W								

0x0368–0x037F Reserved

Address	Name		Bit 7	Bit 6	Bit 5	Bit 4	Bit 3	Bit 2	Bit 1	Bit 0
0x0368–0x037F	Reserved	R	0	0	0	0	0	0	0	0
		W								

0x0380–0x03BF XGATE Map (Sheet 1 of 3)

Address	Name		Bit 7	Bit 6	Bit 5	Bit 4	Bit 3	Bit 2	Bit 1	Bit 0
0x0380	XGMCTL	R	0	0	0	0	0	0	0	XGIEM
		W	XGEM	XGFRZM	XGDBGM	XGSSM	XGFACTM		XGS WEIFM	
0x0381	XGMCTL	R	XGE	XGFRZ	XGDBG	XGSS	XGFACT	0	XGSWEIF	XGIE
		W								
0x0382	XGCHID	R	0	XGCHID[6:0]						
		W								
0x0383	Reserved	R	0	0	0	0	0	0	0	0
		W								
0x0384	XGVBR	R	0	0	0	0	0	0	0	0
		W								
0x0385	XGVBR	R	0	0	0	0	00	0	0	0
		W								
0x0386	XGVBR	R/W	XGVBR[15:8]							
0x0387	XGVBR	R	XGVBR[7:1]							0
		W								
0x0388	XGIF	R	0	0	0	0	0	0	0	XGIF_78
		W								
0x0389	XGIF	R/W	XGIF_77	XGIF_76	XGIF_75	XGIF_74	XGIF_73	XGIF_72	XGIF_71	XGIF_70
0x038A	XGIF	R/W	XGIF_6F	XGIF_6E	XGIF_6D	XGIF_6C	XGIF_6B	XGIF_6A	XGIF_69	XGIF_68
0x023B	XGIF	R/W	XGIF_67	XGIF_66	XGIF_65	XGIF_64	XGIF_63	XGIF_62	XGIF_61	XGIF_60
0x023C	XGIF	R/W	XGIF_5F	XGIF_5E	XGIF_5D	XGIF_5C	XGIF_5B	XGIF_5A	XGIF_59	XGIF_58

0x0380–0x03BF XGATE Map (Sheet 2 of 3)

Address	Name		Bit 7	Bit 6	Bit 5	Bit 4	Bit 3	Bit 2	Bit 1	Bit 0
0x038D	XGIF	R/W	XGIF_57	XGIF_56	XGIF_55	XGIF_54	XGIF_53	XGIF_52	XGIF_51	XGIF_50
0x038E	XGIF	R/W	XGIF_4F	XGIF_4E	XGIF_4D	XGIF_4C	XGIF_4B	XGIF_4A	XGIF_49	XGIF_48
0x038F	XGIF	R/W	XGIF_47	XGIF_46	XGIF_45	XGIF_44	XGIF_43	XGIF_42	XGIF_41	XGIF_40
0x0390	XGIF	R/W	XGIF_3F	XGIF_3E	XGIF_3D	XGIF_3C	XGIF_3B	XGIF_3A	XGIF_39	XGIF_38
0x0391	XGIF	R/W	XGIF_37	XGIF_36	XGIF_35	XGIF_34	XGIF_33	XGIF_32	XGIF_31	XGIF_30
0x0392	XGIF	R/W	XGIF_2F	XGIF_2E	XGIF_2D	XGIF_2C	XGIF_2B	XGIF_2A	XGIF_29	XGIF_28
0x0393	XGIF	R/W	XGIF_27	XGIF_26	XGIF_25	XGIF_24	XGIF_23	XGIF_22	XGIF_21	XGIF_20
0x0394	XGIF	R/W	XGIF_1F	XGIF_1E	XGIF_1D	XGIF_1C	XGIF_1B	XGIF_1A	XGIF_19	XGIF_18
0x0395	XGIF	R/W	XGIF_17	XGIF_16	XGIF_15	XGIF_14	XGIF_13	XGIF_12	XGIF_11	XGIF_10
0x0396	XGIF	R	XGIF_0F	XGIF_0E	XGIF_0D	XGIF_0C	XGIF_0B	XGIF_0A	XGIF_09	0
		W								
0x0397	XGIF	R	0	0	0	0	0	0	0	0
		W								
0x0398	XGSWT (hi)	R	0	0	0	0	0	0	0	0
		W	XGSWTM[7:0]							
0x0399	XGSWT (lo)	R/W	XGSWT[7:0]							
0x039A	XGSEM (hi)	R	0	0	0	0	0	0	0	0
		W	XGSEMM[7:0]							
0x039B	XGSEM (lo)	R/W	XGSEM[7:0]							
0x039C	Reserved	R	0	0	0	0	0	0	0	0
		W								
0x039D	XGCCR	R	0	0	0	0	XGN	XGZ	XGV	XGC
		W								
0x039E	XGPC (hi)	R/W	XGPC[15:8]							
0x039F	XGPC (lo)	R/W	XGPC[7:0]							
0x03A0	Reserved	R	0	0	0	0	0	0	0	0
		W								
0x03A1	Reserved	R	0	0	0	0	0	0	0	0
		W								
0x03A2	XGR1 (hi)	R/W	XGR1[15:8]							
0x03A3	XGR1 (lo)	R/W	XGR1[7:0]							

0x0380–0x03BF XGATE Map (Sheet 3 of 3)

Address	Name		Bit 7	Bit 6	Bit 5	Bit 4	Bit 3	Bit 2	Bit 1	Bit 0
0x03A4	XGR2 (hi)	R/W	XGR2[15:8]							
0x03A5	XGR2 (lo)	R/W	XGR2[7:0]							
0x03A6	XGR3 (hi)	R/W	XGR3[15:8]							
0x03A7	XGR3 (lo)	R/W	XGR3[7:0]							
0x03A8	XGR4 (hi)	R/W	XGR4[15:8]							
0x03A9	XGR4 (lo)	R/W	XGR4[7:0]							
0x03AA	XGR5 (hi)	R/W	XGR5[15:8]							
0x03AB	XGR5(lo)	R/W	XGR5[7:0]							
0x03AC	XGR6 (hi)	R/W	XGR6[15:8]							
0x03AD	XGR6 (lo)	R/W	XGR6[7:0]							
0x03AE	XGR7 (hi)	R/W	XGR7[15:8]							
0x03AF	XGR7 (lo)	R/W	XGR7[7:0]							
0x03B0–0x03BF	Reserved	R	0	0	0	0	0	0	0	0
		W								

0x03C0–0x07FF Reserved

Address	Name		Bit 7	Bit 6	Bit 5	Bit 4	Bit 3	Bit 2	Bit 1	Bit 0
0x03C0 –0x07FF	Reserved	R	0	0	0	0	0	0	0	0
		W								

How to Reach Us:

Home Page:
www.freescale.com

USA/Europe or Locations Not Listed:
Freescale Semiconductor
Technical Information Center, CH370
1300 N. Alma School Road
Chandler, Arizona 85224
1-800-521-6274 or 480-768-2130

Europe, Middle East, and Africa:
+44 1296 380 456 (English)
+46 8 52200080 (English)
+49 89 92103 559 (German)
+33 1 69 35 48 48 (French)

Japan:
Freescale Semiconductor Japan Ltd.
Technical Information Center
3-20-1, Minami-Azabu, Minato-ku
Tokyo 106-0047, Japan
0120-191014 or +81-3-3440-3569

Asia/Pacific:
Freescale Semiconductor Hong Kong Ltd.
Technical Information Center
2 Dai King Street
Tai Po Industrial Estate
Tai Po, N.T., Hong Kong
852-26668334

For Literature Requests Only:
Freescale Semiconductor Literature Distribution Center
P.O. Box 5405
Denver, Colorado 80217
1-800-441-2447 or 303-675-2140
Fax: 303-675-2150

Information in this document is provided solely to enable system and software implementers to use Freescale Semiconductor products. There are no express or implied copyright licenses granted hereunder to design or fabricate any integrated circuits or integrated circuits based on the information in this document.

Freescale Semiconductor reserves the right to make changes without further notice to any products herein. Freescale Semiconductor makes no warranty, representation or guarantee regarding the suitability of its products for any particular purpose, nor does Freescale Semiconductor assume any liability arising out of the application or use of any product or circuit, and specifically disclaims any and all liability, including without limitation consequential or incidental damages. “Typical” parameters that may be provided in Freescale Semiconductor data sheets and/or specifications can and do vary in different applications and actual performance may vary over time. All operating parameters, including “Typicals”, must be validated for each customer application by customer’s technical experts. Freescale Semiconductor does not convey any license under its patent rights nor the rights of others. Freescale Semiconductor products are not designed, intended, or authorized for use as components in systems intended for surgical implant into the body, or other applications intended to support or sustain life, or for any other application in which the failure of the Freescale Semiconductor product could create a situation where personal injury or death may occur. Should Buyer purchase or use Freescale Semiconductor products for any such unintended or unauthorized application, Buyer shall indemnify and hold Freescale Semiconductor and its officers, employees, subsidiaries, affiliates, and distributors harmless against all claims, costs, damages, and expenses, and reasonable attorney fees arising out of, directly or indirectly, any claim of personal injury or death associated with such unintended or unauthorized use, even if such claim alleges that Freescale Semiconductor was negligent regarding the design or manufacture of the part.

Freescale™ and the Freescale logo are trademarks of Freescale Semiconductor, Inc. All other product or service names are the property of their respective owners. The ARM POWERED logo is a registered trademark of ARM Limited. ARM7TDMI-S is a trademark of ARM Limited. Java and all other Java-based marks are trademarks or registered trademarks of Sun Microsystems, Inc. in the U.S. and other countries. The Bluetooth trademarks are owned by their proprietor and used by Freescale Semiconductor, Inc. under license.

© Freescale Semiconductor, Inc. 2005. All rights reserved.

MC9S12XDP512
Rev. 2.17
July 2007