372-0720

CHARACTERISTICS	
Contact resistance	15mΩ max. (initial)
Insulation resistance	100MΩ min. (at 500 VDC)
Dielectric strength	1,000 VAC,50/60Hz for 1 minute between
Mechanically service life	1,000,000 operations min.
Electrically service life	100,000 operations min.

Rating	15A 125VAC or 250VAC
Terminal	Z15G1306
Item No.	
OF	250–350g
RF min.	114g — 931
PT max.	0.4mm — 910
OT min.	1.6mm — 907
MD max.	0.05mm — 5332
OP	21.5±0.5mm

Solder terminal

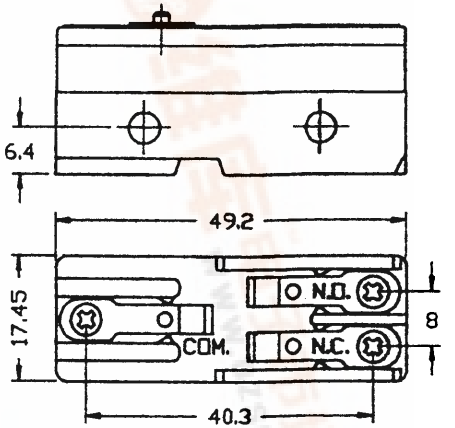

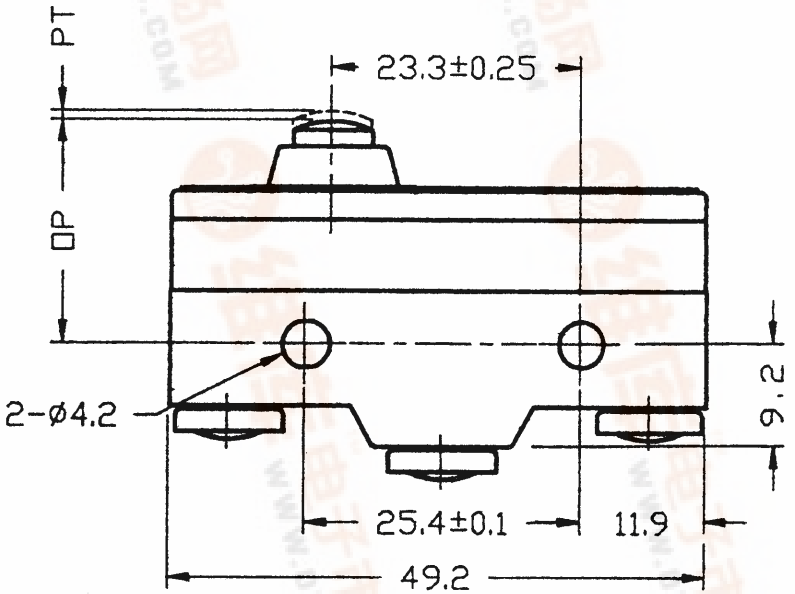

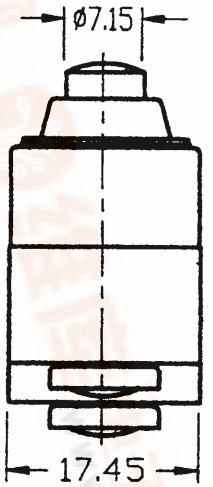

Screw terminal (-B)

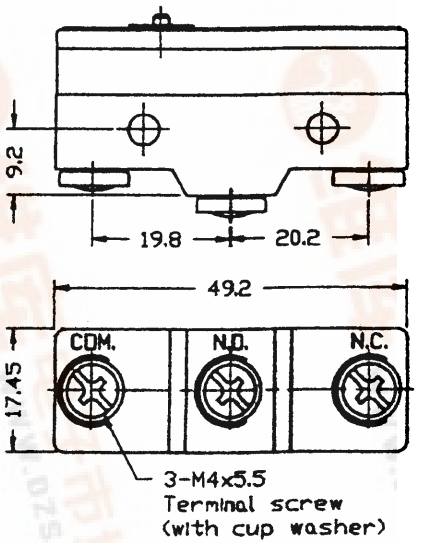

版本：A

海立電氣有限公司 HIGHLY ELECTRIC CO LTD	修正REVISION	日期DATE	說明DESCRIPTION	審核CHECKED 劉克威 9/27	單位UNIT m/m	材質MATERIAL	日期DATE 83.09.27	料號 TYPE NO	Z15G1306
				繪圖DRAWN LKW	比例SCALE 1.5=1	公差TOLERANLE ±0.15	加工PROCESS	檔名 FILE NO	01112010

查询Z15G1306供应商
捷多邦，专业PCB打样工厂，24小时加急出货