查询XQ1701L-SO20N供应商 捷多邦，专业PCB打样工厂，24小时加急出货

XILINX®

# XC1700L Series High Density Serial Configuration PROMs Including XQ1701L QPRO™ Series

January 27, 1999 (Version 2.2)

Product Specification

## Features

- Serial Configuration one-time programmable (OTP) read-only memory designed to store configuration bitstreams of Xilinx FPGA devices
- Simple interface to the FPGA; requires only one user I/O pin
- Cascadable for storing longer or multiple bitstreams
- Programmable reset polarity (active High or active Low) for compatibility with different FPGA solutions
- Supports XC4000EX/XL/XLA/XV fast configuration mode (15.0 MHz)
- Low-power CMOS Floating Gate process
- XC1704L, XC1702L, XC1701L, XQ1701L and the XC17512L are 3.3 V devices
- XC1701 is a 5 V device only
- Available in compact plastic packages: 8-pin PDIP, 20-pin SOIC, 20-pin PLCC, 44-pin PLCC or 44-pin VQFP.
- QPRO™ parts available in 44-pin ceramic LCC and 20-pin SOIC.
- Programming support by leading programmer manufacturers.
- Design support using the Xilinx Alliance and Foundation series software packages.

## Description

The XC1704L, XC1702L, XC1701L, and the XC17512L are Xilinxs 3.3V series of high density serial configuration PROMs (SPROMs). Included within this family are the XC1701 (5V) and the XQ1701L (3.3V) SPROMs to provide an easy-to-use, cost-effective method for storing large Xilinx FPGA configuration bitstreams.

When the FPGA is in Master Serial mode, it generates a configuration clock that drives the SPROM. A short access time after the rising clock edge, data appears on the SPROM DATA output pin that is connected to the FPGA DIN pin. The FPGA generates the appropriate number of clock pulses to complete the configuration. Once configured, it disables the SPROM. When the FPGA is in Slave Serial mode, the SPROM and the FPGA must both be clocked by an incoming signal.

Multiple devices can be concatenated by using the $\overline{CEO}$ output to drive the $\overline{CE}$ input of the following device. The clock inputs and the DATA outputs of all SPROMs in this chain are interconnected. All devices are compatible and can be cascaded with other members of the family.

For device programming, either the Xilinx Alliance or Foundation series development system compiles the FPGA design file into a standard Hex format, which is then transferred to most commercial PROM programmers.



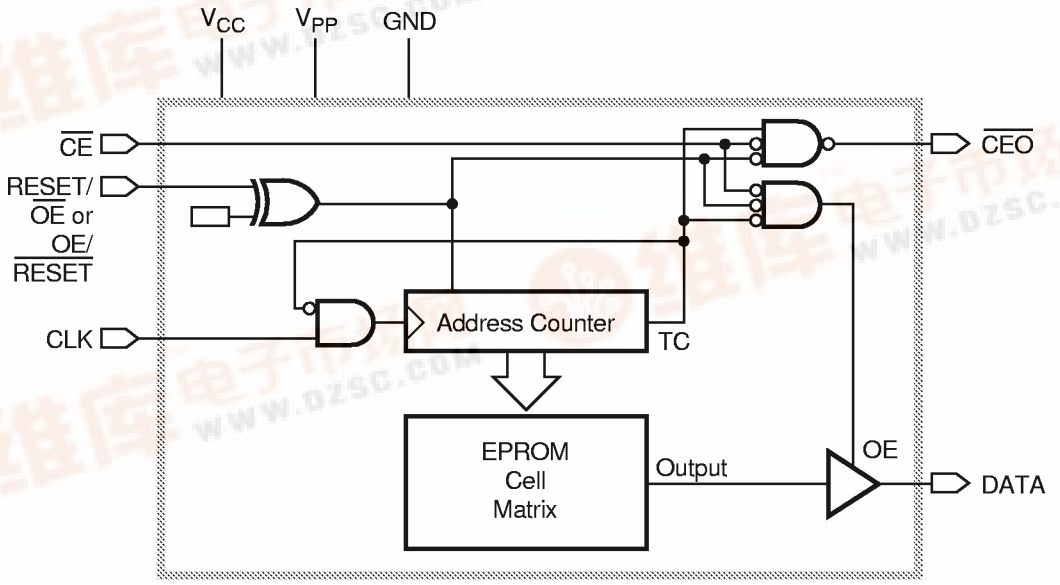


**Figure 1: Simplified Block Diagram (does not show programming circuit)**

找PDF 维库一下 pdf.dzsc.com

# Pin Description

## DATA

Data output, 3-stated when either $\overline{CE}$ or $\overline{OE}$ are inactive. During programming, the DATA pin is I/O. Note that $\overline{OE}$ can be programmed to be either active High or active Low.

## CLK

Each rising edge on the CLK input increments the internal address counter, if both $\overline{CE}$ and $\overline{OE}$ are active.

## RESET/$\overline{OE}$

When High, this input holds the address counter reset and 3-states the DATA output. The polarity of this input pin is programmable as either RESET/$\overline{OE}$ or OE/$\overline{RESET}$. To avoid confusion, this document describes the pin as RESET/$\overline{OE}$, although the opposite polarity is possible on all devices. When RESET is active, the address counter is held at zero, and the DATA output is 3-stated. The polarity of this input is programmable. The default is active High RESET, but the preferred option is active Low $\overline{RESET}$, because it can be driven by the FPGA's $\overline{INIT}$ pin.

The polarity of this pin is controlled in the programmer interface. This input pin is easily inverted using the Xilinx HW-130 Programmer. Third-party programmers have different methods to invert this pin.

## $\overline{CE}$

When High, this pin disables the internal address counter, 3-states the DATA output, and forces the device into low-$I_{CC}$ standby mode.

## $\overline{CEO}$

Chip Enable output, to be connected to the $\overline{CE}$ input of the next SPROM in the daisy chain. This output is Low when the $\overline{CE}$ and $\overline{OE}$ inputs are both active AND the internal address counter has been incremented beyond its Terminal Count (TC) value. In other words: when the PROM has been read, $\overline{CEO}$ will follow $\overline{CE}$ as long as $\overline{OE}$ is active. When $\overline{OE}$ goes inactive, $\overline{CEO}$ stays High until the PROM is reset. Note that $\overline{OE}$ can be programmed to be either active High or active Low.

## $V_{PP}$

Programming voltage. No overshoot above the specified max voltage is permitted on this pin. For normal read operation, this pin *must* be connected to $V_{CC}$. Failure to do so may lead to unpredictable, temperature-dependent operation and severe problems in circuit debugging. *Do not leave VPP floating!*

## $V_{CC}$ and GND

Positive supply and ground pins.

## Serial PROM Pinouts

| Pin Name | 8-Pin PDIP | 20-Pin SOIC | 20-Pin PLCC | 44-Pin VQFP | 44-Pin PLCC CLCC |
|---|---|---|---|---|---|
| DATA | 1 | 1 | 2 | 40 | 2 |
| CLK | 2 | 3 | 4 | 43 | 5 |
| RESET/$\overline{OE}$ (OE/$\overline{RESET}$) | 3 | 8 | 6 | 13 | 19 |
| $\overline{CE}$ | 4 | 10 | 8 | 15 | 21 |
| GND | 5 | 11 | 10 | 18 & 41 | 24 & 3 |
| $\overline{CEO}$ | 6 | 13 | 14 | 21 | 27 |
| $V_{PP}$ | 7 | 18 | 17 | 35 | 41 |
| $V_{CC}$ | 8 | 20 | 20 | 38 | 44 |

## Capacity

| Devices | Configuration Bits |
|---|---|
| XC1704L | 4,194,304 |
| XC1702L | 2,097,152 |
| XC1701L | 1,048,576 |
| XC1701 | 1,048,576 |
| XC17512L | 524,288 |

## Xilinx FPGAs and Compatible SPROMs.

| Device | Configuration Bits | SPROM |
|---|---|---|
| XC4010XL | 283,424 | XC17512L |
| XC4013XL/XLA | 393,632 | XC17512L |
| XC4020E | 329,312 | XC1701 |
| XC4020XL/XLA | 521,880 | XC17512L |
| XC4025E | 422,176 | XC1701 |
| XC4028XL/XLA | 668,184 | XC1701L |
| XC4028EX | 668,184 | XC1701 |
| XC4036EX | 832,528 | XC1701 |
| XC4036XL/XLA | 832,528 | XC1701L |
| XC4044XL/XLA | 1,014,928 | XC1701L |
| XC4052XL/XLA | 1,215,368 | XC1702L |
| XC4062XL/XLA | 1,433,864 | XC1702L |
| XC4085XL/XLA | 1,924,992 | XC1702L |
| XC40110XV | 2,686,136 | XC1704L |
| XC40150XV | 3,373,448 | XC1704L |
| XC40200XV | 4,551,056 | XC1704L + XC17512L |
| XC40250XV | 5,433,888 | XC1704L + XC1702L |
| XCV50 | 559,232 | XC1701L |
| XCV100 | 781,248 | XC1701L |
| XCV150 | 1,041,128 | XC1701L |
| XCV200 | 1,335,872 | XC1702L |
| XCV300 | 1,751,840 | XC1702L |
| XCV400 | 2,546,080 | XC1704L |
| XCV600 | 3,608,000 | XC1704L |
| XCV800 | 4,715,648 | XC1704L + XC1701L |
| XCV1000 | 6,127,776 | XC1704L + XC1702L |

## Controlling Serial PROMs

Connecting the FPGA device with the SPROM.

- The DATA output(s) of the of the SPROM(s) drives the DIN input of the lead FPGA device.
- The Master FPGA CCLK output drives the CLK input(s) of the SPROM(s).
- The $\overline{CEO}$ output of a SPROM drives the $\overline{CE}$ input of the next SPROM in a daisy chain (if any).
- The $\overline{RESET}$/OE input of all SPROMs is best driven by the $\overline{INIT}$ output of the lead FPGA device. This connection assures that the SPROM address counter is reset before the start of any (re)configuration, even when a reconfiguration is initiated by a $V_{CC}$ glitch. Other methods – such as driving $\overline{RESET}$/OE from $\overline{LDC}$ or system reset – assume the SPROM internal power-on-reset is always in step with the FPGA's internal power-on-reset. This may not be a safe assumption.
- The SPROM $\overline{CE}$ input can be driven from either the $\overline{LDC}$ or DONE pins. Using $\overline{LDC}$ avoids potential contention on the DIN pin.
- The $\overline{CE}$ input of the lead (or only) SPROM is driven by the DONE output of the lead FPGA device, provided that DONE is not permanently grounded. Otherwise, $\overline{LDC}$ can be used to drive $\overline{CE}$, but must then be unconditionally High during user operation. $\overline{CE}$ can also be permanently tied Low, but this keeps the DATA output active and causes an unnecessary supply current of 10 mA maximum.

## FPGA Master Serial Mode Summary

The I/O and logic functions of the Configurable Logic Block (CLB) and their associated interconnections are established by a configuration program. The program is loaded either automatically upon power up, or on command, depending on the state of the three FPGA mode pins. In Master Serial mode, the FPGA automatically loads the configuration program from an external memory. The Xilinx SPROMs have been designed for compatibility with the Master Serial mode.

Upon power-up or reconfiguration, an FPGA enters the Master Serial mode whenever all three of the FPGA mode-select pins are Low (M0=0, M1=0, M2=0). Data is read from the SPROM sequentially on a single data line. Synchronization is provided by the rising edge of the temporary signal CCLK, which is generated during configuration.

Master Serial Mode provides a simple configuration interface. Only a serial data line and two control lines are required to configure an FPGA. Data from the SPROM is read sequentially, accessed via the internal address and bit counters which are incremented on every valid rising edge of CCLK.

If the user-programmable, dual-function DIN pin on the FPGA is used only for configuration, it must still be held at a defined level during normal operation. The Xilinx FPGA families take care of this automatically with an on-chip default pull-up resistor.

### Programming the FPGA With Counters Unchanged Upon Completion

When multiple FPGA-configurations for a single FPGA are stored in a SPROM, the $\overline{OE}$ pin should be tied Low. Upon power-up, the internal address counters are reset and configuration begins with the first program stored in memory. Since the $\overline{OE}$ pin is held Low, the address counters are left unchanged after configuration is complete. Therefore, to reprogram the FPGA with another program, the DONE line is pulled Low and configuration begins at the last value of the address counters.

This method fails if a user applies $\overline{RESET}$ during the FPGA configuration process. The FPGA aborts the configuration and then restarts a new configuration, as intended, but the Serial PROM does not reset its address counter, since it never saw a High level on its $\overline{OE}$ input. The new configuration, therefore, reads the remaining data in the PROM and interprets it as preamble, length count etc. Since the FPGA is the master, it issues the necessary number of CCLK pulses, up to 16 million ($2^{24}$) and DONE goes High. However, the FPGA configuration will be completely wrong, with potential contentions inside the FPGA and on its output pins. This method must, therefore, never be used when there is any chance of external reset during configuration.

### Cascading Serial Configuration PROMs

For multiple FPGAs configured as a daisy-chain, or for future FPGAs requiring larger configuration memories, cascaded SPROMs provide additional memory. After the last bit from the first SPROM is read, the next clock signal to the SPROM asserts its $\overline{CEO}$ output Low and disables its DATA line. The second SPROM recognizes the Low level on its $\overline{CE}$ input and enables its DATA output. See Figure 2.

After configuration is complete, the address counters of all cascaded SPROMs are reset if the FPGA $\overline{RESET}$ pin goes Low, assuming the SPROM reset polarity option has been inverted.

To reprogram the FPGA with another program, the DONE line goes Low and configuration begins where the address counters had stopped. In this case, avoid contention between DATA and the configured I/O use of DIN.

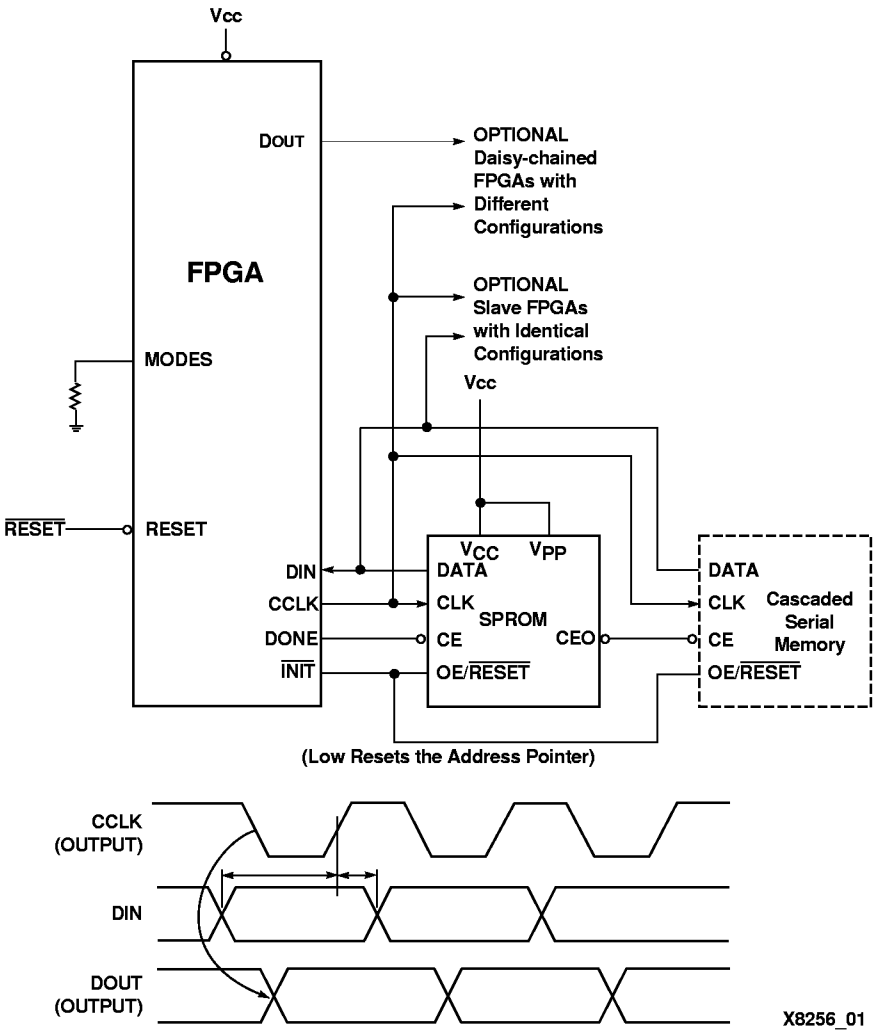


**Figure 2: Master Serial Mode.** The one-time-programmable SPROM supports automatic loading of configuration programs. Multiple devices can be cascaded to support additional FPGAs. An early DONE inhibits the PROM data output one CCLK cycle before the FPGA I/Os become active.

## Standby Mode

The PROM enters a low-power standby mode whenever $\overline{CE}$ is asserted High. The output remains in a high impedance state regardless of the state of the $\overline{OE}$ input.

## Programming

The devices can be programmed on programmers supplied by Xilinx or qualified third-party vendors. The user must ensure that the appropriate programming algorithm and the latest version of the programmer software are used. The wrong choice can permanently damage the device.

**Table 1: Truth Table for XC1700 Control Inputs**

| Control Inputs | | Internal Address | Outputs | | |
|---|---|---|---|---|---|
| RESET | CE | | DATA | CEO | $I_{cc}$ |
| Inactive | Low | if address ≤ TC: increment<br>if address > TC: don't change | active<br>3-state | High<br>Low | active<br>reduced |
| Active | Low | Held reset | 3-state | High | active |
| Inactive | High | Not changing | 3-state | High | standby |
| Active | High | Held reset | 3-state | High | standby |

**Notes:** 1. The XC1700 RESET input has programmable polarity
2. TC = Terminal Count = highest address value. TC+1 = address 0.

**IMPORTANT:** Always tie the $V_{PP}$ pin to $V_{CC}$ in your application. Never leave $V_{PP}$ floating.

# XC1701

## Absolute Maximum Ratings

| Symbol | Description | | Units |
|---|---|---|---|
| $V_{CC}$ | Supply voltage relative to GND | -0.5 to +7.0 | V |
| $V_{PP}$ | Supply voltage relative to GND | -0.5 to +12.5 | V |
| $V_{IN}$ | Input voltage relative to GND | -0.5 to $V_{CC}$ +0.5 | V |
| $V_{TS}$ | Voltage applied to 3-state output | -0.5 to $V_{CC}$ +0.5 | V |
| $T_{STG}$ | Storage temperature (ambient) | -65 to +150 | °C |
| $T_{SOL}$ | Maximum soldering temperature (10 s @ 1/16 in.) | +260 | °C |

**Note**: Stresses beyond those listed under Absolute Maximum Ratings may cause permanent damage to the device. These are stress ratings only, and functional operation of the device at these or any other conditions beyond those listed under Operating Conditions is not implied. Exposure to Absolute Maximum Ratings conditions for extended periods of time may affect device reliability.

## Operating Conditions

| Symbol | Description | | Min | Max | Units |
|---|---|---|---|---|---|
| $V_{CC}$ | Commercial | Supply voltage relative to GND ($T_A$ = 0°C to +70°C) | 4.75 | 5.25 | V |
| | Industrial | Supply voltage relative to GND ($T_A$ = -40°C to +85°C) | 4.50 | 5.50 | V |

**Note**: During normal read operation $V_{PP}$ ***must*** be connect to $V_{CC}$

## DC Characteristics Over Operating Condition

| Symbol | Description | | Min | Max | Units |
|---|---|---|---|---|---|
| $V_{IH}$ | High-level input voltage | | 2.0 | $V_{CC}$ | V |
| $V_{IL}$ | Low-level input voltage | | 0 | 0.8 | V |
| $V_{OH}$ | High-level output voltage ($I_{OH}$ = -4 mA) | Commercial | 3.86 | | V |
| $V_{OL}$ | Low-level output voltage ($I_{OL}$ = +4 mA) | | | 0.32 | V |
| $V_{OH}$ | High-level output voltage ($I_{OH}$ = -4 mA) | Industrial | 3.76 | | V |
| $V_{OL}$ | Low-level output voltage ($I_{OL}$ = +4 mA) | | | 0.37 | V |
| $I_{CCA}$ | Supply current, active mode (at maximum frequency) | | | 10.0 | mA |
| $I_{CCS}$ | Supply current, standby mode | | | 100.0 | µA |
| $I_L$ | Input or output leakage current | | -10.0 | 10.0 | µA |
| $C_{IN}$ | Input Capacitance ($V_{IN}$ = GND, f = 1.0 MHZ) | | | 10.0 | pF |
| $C_{OUT}$ | Output Capacitance ($V_{IN}$ = GND, f = 1.0 MHZ) | | | 10.0 | pF |

# XC1704L, XC1702L, XC1701L, XQ1701L, & XC17512L

## Absolute Maximum Ratings

| Symbol | Description | | Units |
|---|---|---|---|
| $V_{CC}$ | Supply voltage relative to GND | -0.5 to +4.0 | V |
| $V_{PP}$ | Supply voltage relative to GND | -0.5 to +12.5 | V |
| $V_{IN}$ | Input voltage with respect to GND | -0.5 to $V_{CC}$ +0.5 | V |
| $V_{TS}$ | Voltage applied to 3-state output | -0.5 to $V_{CC}$ +0.5 | V |
| $T_{STG}$ | Storage temperature (ambient) | -65 to +150 | °C |
| $T_{SOL}$ | Maximum soldering temperature (10 s @ 1/16 in.) | +260 | °C |

**Note:** Stresses beyond those listed under Absolute Maximum Ratings may cause permanent damage to the device. These are stress ratings only, and functional operation of the device at these or any other conditions beyond those listed under Operating Conditions is not implied. Exposure to Absolute Maximum Ratings conditions for extended periods of time may affect device reliability.

## Operating Conditions

| Symbol | Description | | Min | Max | Units |
|---|---|---|---|---|---|
| $V_{CC}$ | Commercial | Supply voltage relative to GND ($T_A$ = 0°C to +70°C) | 3.0 | 3.6 | V |
| | Industrial | Supply voltage relative to GND ($T_A$ = -40°C to +85°C) | 3.0 | 3.6 | V |
| | Military | Supply voltage relative to GND<br>Ceramic Package ($T_C$ = -55°C to +125°C) | 3.0 | 3.6 | V |
| | | Supply voltage relative to GND<br>Plastic Package ($T_J$ = -55°C to +125°C) | 3.0 | 3.6 | V |

**Note**: During normal read operation $V_{PP}$ ***must*** be connected to $V_{CC}$

## DC Characteristics Over Operating Condition

| Symbol | Description | | Min | Max | Units |
|---|---|---|---|---|---|
| $V_{IH}$ | High-level input voltage | | 2.0 | $V_{CC}$ | V |
| $V_{IL}$ | Low-level input voltage | | 0 | 0.8 | V |
| $V_{OH}$ | High-level output voltage ($I_{OH}$ = -3 mA) | | 2.4 | | V |
| $V_{OL}$ | Low-level output voltage ($I_{OL}$ = +3 mA) | | | 0.4 | V |
| $I_{CCA}$ | Supply current, active mode (at maximum frequency) | | | 10.0 | mA |
| $I_{CCS}$ | Supply current, standby mode | Commercial/Industrial | | 50.0 | µA |
| | | Military | | 100.0 | µA |
| $I_L$ | Input or output leakage current | | -10.0 | 10.0 | µA |
| $C_{IN}$ | Input Capacitance ($V_{IN}$ = GND, f = 1.0 MHZ) | | | 10.0 | pF |
| $C_{OUT}$ | Output Capacitance ($V_{IN}$ = GND, f = 1.0 MHZ) | | | 10.0 | pF |

## AC Characteristics Over Operating Condition

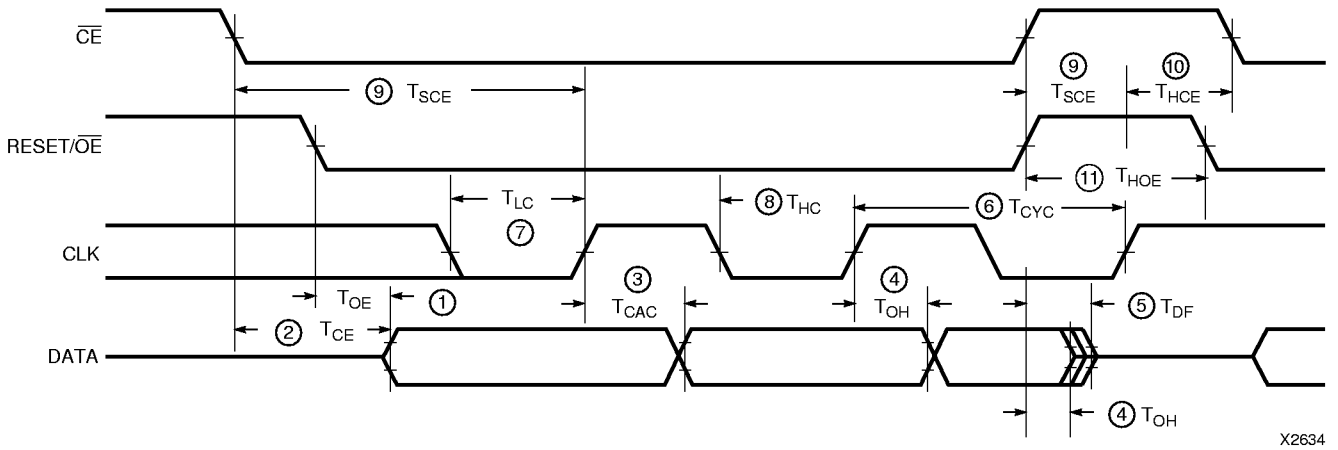


| Symbol | | Description | XC1701 | | XC1704L, XC1702L, XC1701L, XQ1701L & XC17512L | | Units |
|---|---|---|---|---|---|---|---|
| | | | Min | Max | Min | Max | |
| 1 | $T_{OE}$ | $\overline{OE}$ to Data Delay | | 25 | | 30 | ns |
| 2 | $T_{CE}$ | $\overline{CE}$ to Data Delay | | 45 | | 45 | ns |
| 3 | $T_{CAC}$ | CLK to Data Delay | | 45 | | 45 | ns |
| 4 | $T_{OH}$ | Data Hold From $\overline{CE}$, $\overline{OE}$, or CLK | 0 | | 0 | | ns |
| 5 | $T_{DF}$ | $\overline{CE}$ or $\overline{OE}$ to Data Float Delay[2] | | 50 | | 50 | ns |
| 6 | $T_{CYC}$ | Clock Periods | 67 | | 67 | | ns |
| 7 | $T_{LC}$ | CLK Low Time[3] | 20 | | 25 | | ns |
| 8 | THC | CLK High Time[3] | 20 | | 25 | | ns |
| 9 | TSCE | $\overline{CE}$ Setup Time to CLK (to guarantee proper counting) | 20 | | 25 | | ns |
| 10 | $T_{HCE}$ | $\overline{CE}$ Hold Time to CLK (to guarantee proper counting) | 0 | | 0 | | ns |
| 11 | $T_{HOE}$ | $\overline{OE}$ Hold Time (guarantees counters are reset) | 20 | | 25 | | ns |

**Notes:** 1. AC test load = 50 pF
2. Float delays are measured with 5 pF AC loads. Transition is measured at +/- 200mV from steady state active levels.
3. Guaranteed by design, not tested.
4. All AC parameters are measured with $V_{IL}$ = 0.0 V and $V_{IH}$ = 3.0 V.

## AC Characteristics Over Operating Condition When Cascading

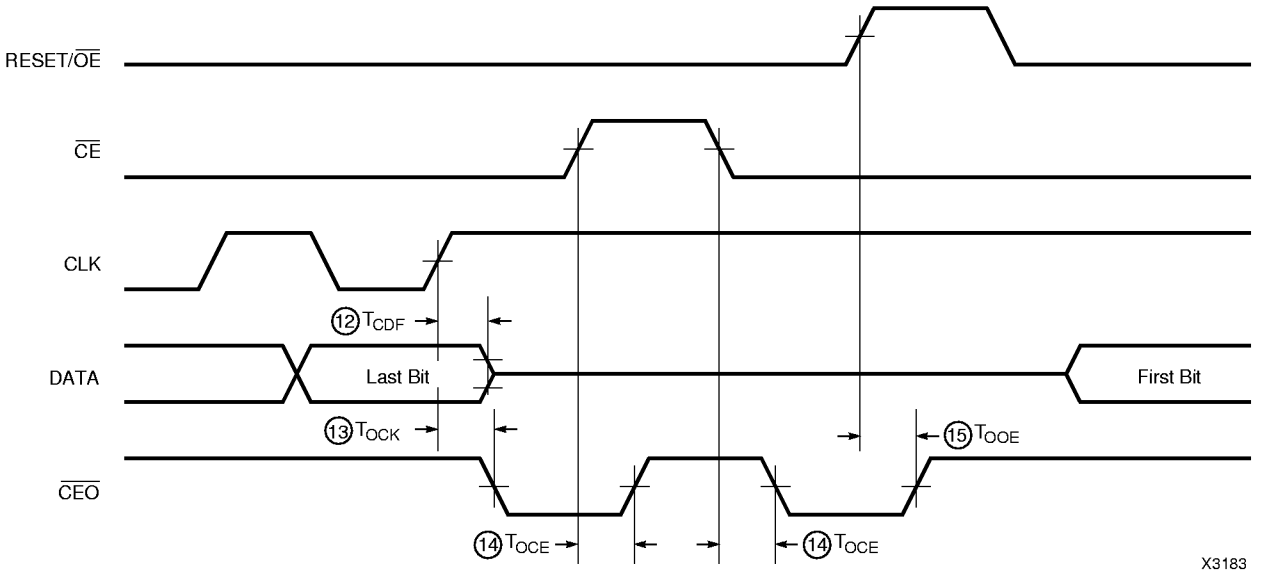


| Symbol | | Description | Min | Max | Units |
|---|---|---|---|---|---|
| 12 | $T_{CDF}$ | CLK to Data Float Delay[2, 3] | | 50 | ns |
| 13 | $T_{OCK}$ | CLK to $\overline{CEO}$ Delay[3] | | 30 | ns |
| 14 | $T_{OCE}$ | CE to $\overline{CEO}$ Delay[3] | | 35 | ns |
| 15 | $T_{OOE}$ | RESET/$\overline{OE}$ to $\overline{CEO}$ Delay[3] | | 30 | ns |

**Notes:** 1. AC test load = 50 pF
2. Float delays are measured with 5 pF AC loads. Transition is measured at +/- 200mV from steady state active levels.
3. Guaranteed by design, not tested.
4. All AC parameters are measured with $V_{IL}$ = 0.0 V and $V_{IH}$ = 3.0 V.

## Ordering Information

**XC 1701L PC20 C**

**Device Type**
XC Commercial
XQ QPRO™

**Device Number**
1704L
1702L
1701L
1701
17512L

**Package Type**
PD8 = 8-Pin Plastic DIP
SO20 = 20-Pin Plastic Small-Outline Package
PC20 = 20-Pin Plastic Leaded Chip Carrier
VQ44 = 44-Pin Plastic Quad Flat Package
PC44 = 44-Pin Plastic Chip Carrier
CC44 = 44-Pin Ceramic Chip Carrier

**Operating Range/Processing**
C = Commercial ($T_A$ = 0° to +70°C)
I = Industrial ($T_A$ = –40° to +85°C)
N = Military Plastic ($T_J$ = –55° to +125°C)
M = Military ($T_C$ = –55° to +125°C)
B = Military ($T_C$ = –55° to +125°C)
QML certified to MIL-PRF-38535

## Valid Ordering Combinations

| | | | | |
|---|---|---|---|---|
| XC1704LVQ44C<br>XC1704LPC44C | XC1702LVQ44C<br>XC1702LPC44C | XC1701LPD8C<br>XC1701LSO20C<br>XC1701LPC20C | XC1701PD8C<br>XC1701SO20C<br>XC1701PC20C | XC17512LPD8C<br>XC17512LSO20C<br>XC17512LPC20C |
| XC1704LVQ44I<br>XC1704LPC44I | XC1702LVQ44I<br>XC1702LPC44I | XC1701LPD8I<br>XC1701LSO20I<br>XC1701PC20I | XC1701PD8I<br>XC1701SO20I<br>XC1701PC20I | XC17512LPD8I<br>XC17512LSO20I<br>XC17512LPC20I |
| | | XQ1701LCC44M<br>XQ1701LCC44B<br>XQ1701LS020N | | |

## Marking Information

Due to the small size of the commercial serial PROM packages, the complete ordering part number cannot be marked on the package. The XC prefix is deleted and the package code is simplified. The XQ CC44 packages are marked as ordered. Device marking on the commercial and military plastic packages is as follows:

**1701L J C**

**Device Number**
XC1704L
XC1702L
XC1701L
XQ1701L
XC1701
XC17512L

**Package Type**
P = 8-Pin Plastic DIP
S = 20-Pin Plastic Small-Outline Package
J = 20-Pin Plastic Leaded Chip Carrier
VQ44 = 44-Pin Plastic Quad Flat Package
PC44 = 44-Pin Plastic Chip Carrier
CC44 = 44-Pin Ceramic Chip Carrier

**Operating Range/Processing**
C = Commercial ($T_A$ = 0° to +70°C)
I = Industrial ($T_A$ = –40° to +85°C)
N = Military Plastic ($T_J$ = –55° to +125°C)
M = Military ($T_C$ = –55° to +125°C)
B = Military ($T_C$ = –55° to +125°C)
QML certified to MIL-PRF-38535

## Revision Control

| Date | Revision |
|---|---|
| 7/14/98 | Major revisions to include the XC1704L, XC1702L, and the XQ1701L devices, packages and operating conditions. Also revised the timing specifications on page 10. |
| 9/8/98 | Revised the marking information on page 12 for the VQ44. Updated "DC Characteristics Over Operating Condition" on page 8. and page 9. Added references to the XC4000XLA and XC4000XV families in "Xilinx FPGAs and Compatible SPROMs." on page 4. and Figure 2 on page 6. |
| 12/18/98 | Added Virtex FPGAs to "Xilinx FPGAs and Compatible SPROMs." on page 4. Added the PC44 package for the XC1702L & XC1704L products. |
| 1/27/99 | Changed Military $I_{CCS}$ on page 9. |

## Plastic DIP Package - PD8

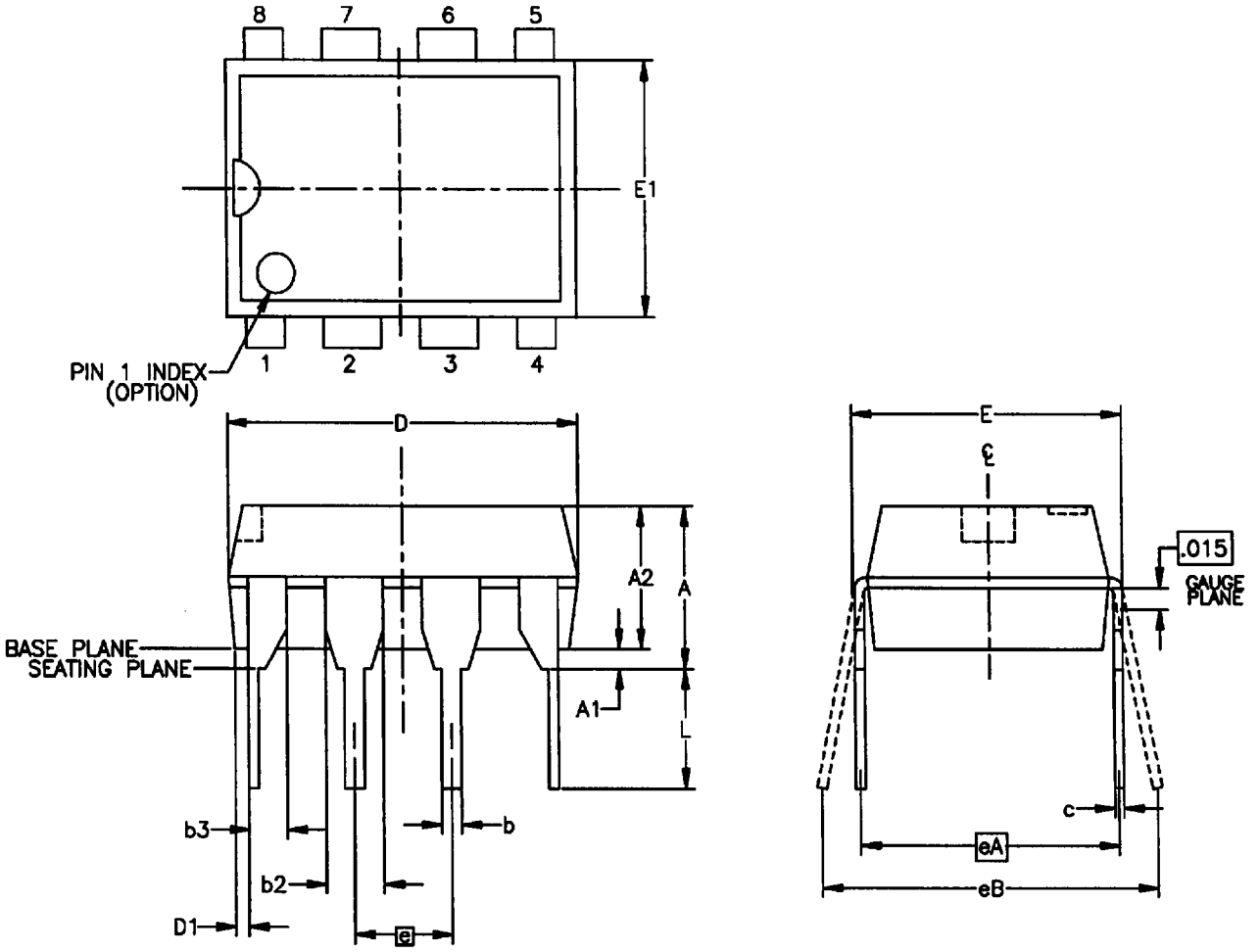


| SYMBOL | INCHES MIN. | INCHES MAX. | NOTE |
|---|---|---|---|
| A | — | 0.181 | |
| $A_1$ | 0.019 | — | |
| $A_2$ | 0.122 | 0.161 | |
| b | 0.014 | 0.022 | |
| $b_2$ | 0.045 | — | |
| $b_3$ | — | 0.045 | |
| c | 0.009 | 0.012 | |
| D | 0.355 | 0.382 | |
| $D_1$ | 0.005 | — | |
| E | 0.303 | 0.323 | |
| $E_1$ | 0.240 | 0.272 | |
| e | 0.100 BSC | | |
| $e_A$ | 0.300 BSC | | |
| $e_B$ | — | 0.430 | |
| L | 0.115 | 0.150 | |
| N | 8 | | |

NOTES:

1. ALL DIMENSIONS AND TOLERANCES CONFORM TO ANSI Y14.5M-1982.
2. DIMENSIONS "D" AND "E1" DO NOT INCLUDE MOLD PROTRUSIONS. ALLOWABLE MOLD PROTRUSION SHALL NOT EXCEED .010" PER SIDE.
3. LEAD FINISH: (85±5%)Sn-Pb SOLDER PLATE
4. CONFORMS TO JEDEC MS-001-BA

8-PIN PLASTIC DIP (PD8)

## SOIC and TSOP Packages - SO8, VO8

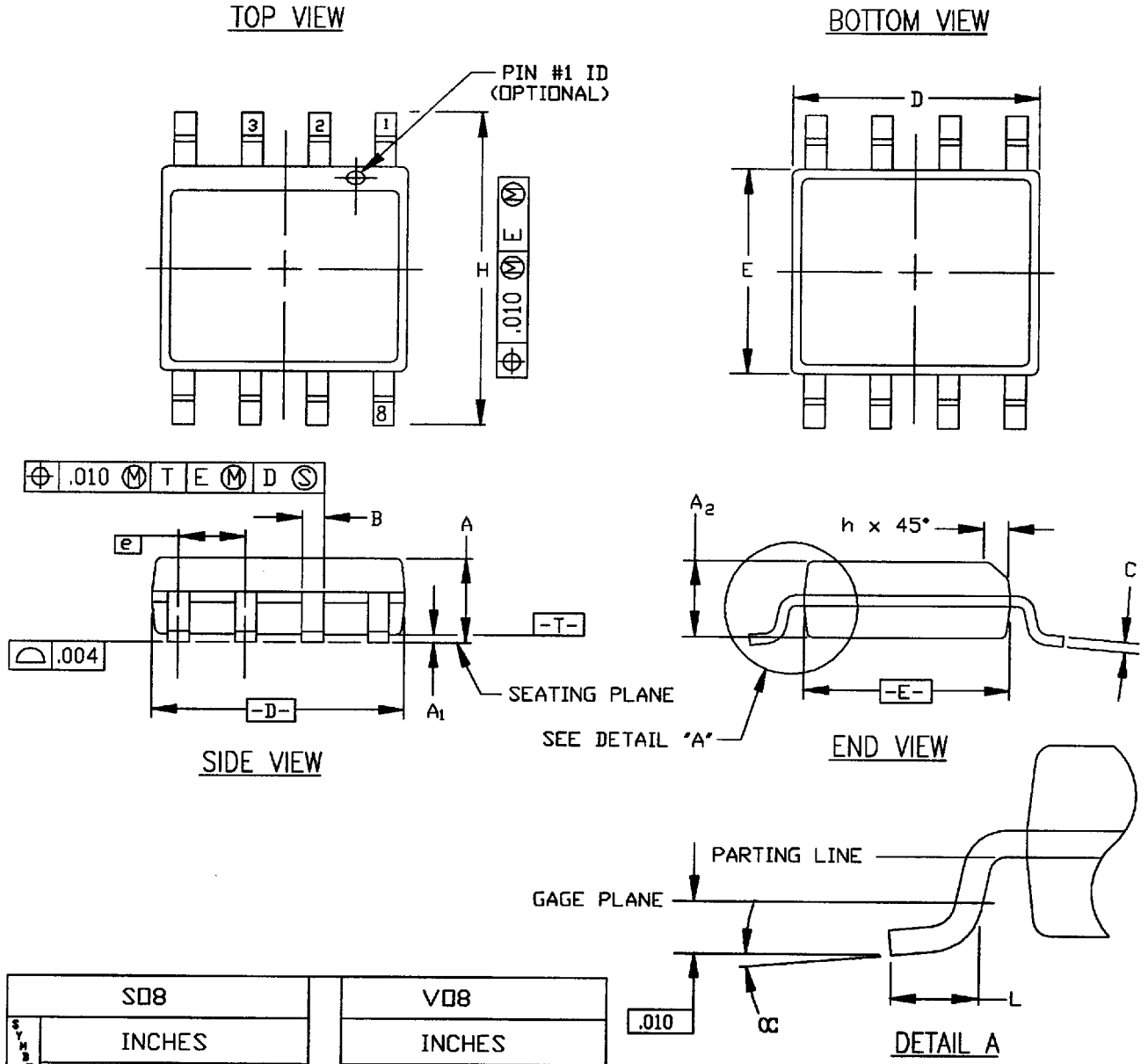


| SYMBOL | SO8 INCHES MIN. | SO8 INCHES NOM. | SO8 INCHES MAX. | VO8 INCHES MIN. | VO8 INCHES NOM. | VO8 INCHES MAX. |
|---|---|---|---|---|---|---|
| A | .059 | .064 | .068 | — | — | .047 |
| $A_1$ | .004 | .006 | .0098 | .002 | .004 | .006 |
| $A_2$ | .055 | .058 | .061 | .037 | .039 | .044 |
| B | .013 | .016 | .020 | .0138 | — | .0192 |
| C | .0075 | .008 | .0098 | .0075 | — | .0089 |
| D | .189 | .194 | .196 | .189 | .194 | .196 |
| E | .150 | .155 | .157 | .150 | .155 | .157 |
| e | .050 BSC | | | .050 BSC | | |
| H | .229 | .236 | .244 | .230 | .236 | .244 |
| h | .010 | .013 | .019 | .010 | .013 | .019 |
| L | .016 | .025 | .035 | .016 | .025 | .035 |
| α | 0° | 5° | 8° | 0° | — | 8° |
| REF. | JEDEC MS-012 | | | — | | |

NOTES:

1. ALL DIMENSIONS AND TOLERANCES CONFORM TO ANSI Y14.5M-1982.
2. DIMENSION 'D' DOES NOT INCLUDE MOLD PROTRUSION. ALLOWABLE MOLD PROTRUSION SHALL NOT EXCEED .006" PER SIDE.
3. DIMENSION 'E' DOES NOT INCLUDE MOLD PROTRUSION. ALLOWABLE MOLD PROTRUSION SHALL NOT EXCEED .010 INCH PER SIDE.
4. LEAD FINISH: SOLDER PLATE

8 LEAD SOIC/TSOP (SO8, VO8)

## PLCC Packages - PC20, PC28, PC44, PC68, PC84

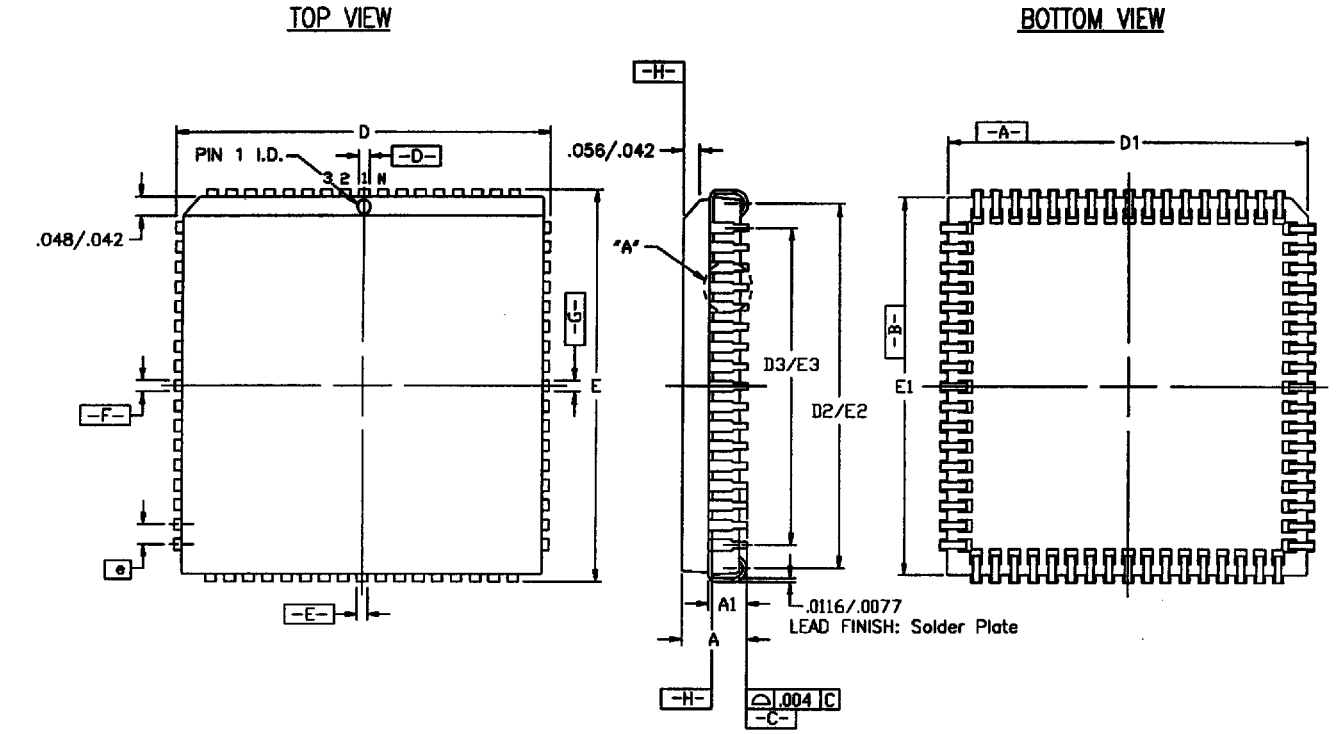


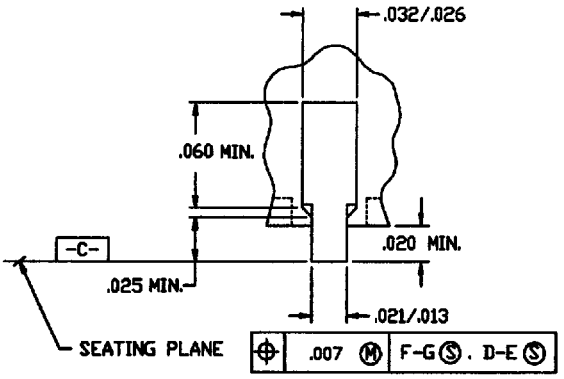


DETAIL "A"

| SYMBOL | INCHES | | | | | | | | | |
|---|---|---|---|---|---|---|---|---|---|---|
| | MIN. | MAX. | MIN. | MAX. | MIN. | MAX. | MIN. | MAX. | MIN. | MAX. |
| A | .165 | .180 | .165 | .180 | .165 | .180 | .165 | .200 | .165 | .200 |
| $A_1$ | .090 | .120 | .099 | .110 | .090 | .120 | .090 | .130 | .090 | .130 |
| D/E | .385 | .395 | .485 | .495 | .685 | .695 | .985 | .995 | 1.185 | 1.195 |
| $D_1/E_1$ | .350 | .356 | .450 | .456 | .650 | .656 | .950 | .958 | 1.150 | 1.158 |
| $D_2/E_2$ | .290 | .330 | .390 | .430 | .590 | .630 | .890 | .930 | 1.090 | 1.130 |
| $D_3/E_3$ | .200 REF. | | .300 REF. | | .500 REF. | | .800 REF. | | 1.000 REF. | |
| e | .050 BSC | | .050 BSC | | .050 BSC | | .050 BSC | | .050 BSC | |
| N | 20 | | 28 | | 44 | | 68 | | 84 | |

NOTES:

1. ALL DIMENSIONS AND TOLERANCES CONFORM TO ANSI Y14.5M-1982.
2. DIMENSIONS 'D1' AND 'E1' DO NOT INCLUDE MOLD FLASH OR PROTRUSIONS. MOLD FLASH OR PROTRUSIONS SHALL NOT EXCEED .010 PER SIDE.
3. 'N' IS NUMBER OF TERMINALS.
4. CONFORM TO JEDEC MO-047
5. TOP OF PACKAGE MAY BE SMALLER THAN BOTTOM BY .010".

20, 28, 44, 68 and 84-PIN PLCC (PC20 THRU PC84)

## VQFP Packages - VQ44, VQ64, VQ100

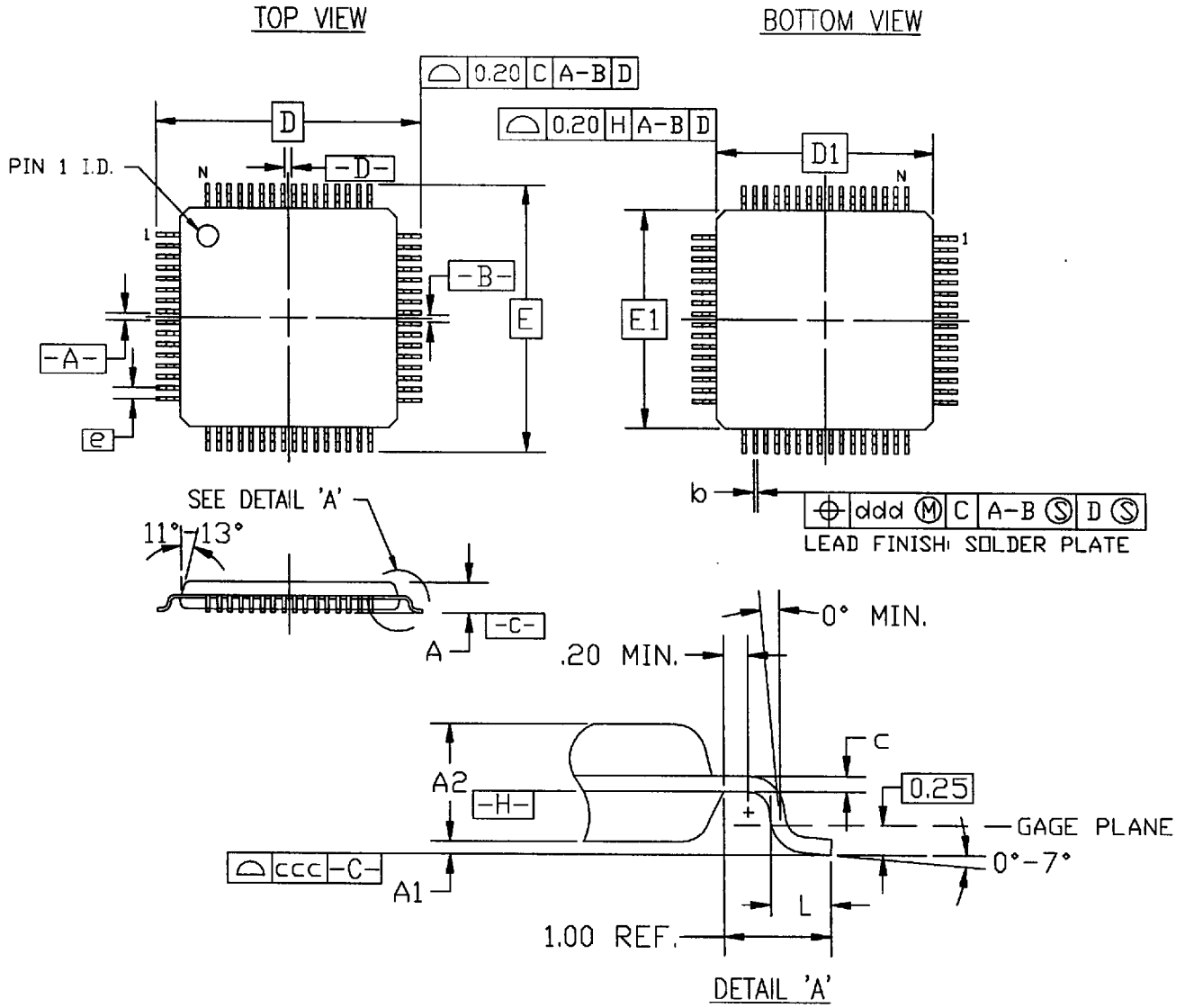


| SYMBOL | VQ44 MILLIMETERS MIN. | VQ44 NOM. | VQ44 MAX. | VQ64 MILLIMETERS MIN. | VQ64 NOM. | VQ64 MAX. | VQ100 MILLIMETERS MIN. | VQ100 NOM. | VQ100 MAX. |
|---|---|---|---|---|---|---|---|---|---|
| A | — | — | 1.20 | — | — | 1.20 | — | — | 1.20 |
| $A_1$ | 0.05 | — | 0.15 | 0.05 | 0.10 | 0.15 | 0.05 | 0.10 | 0.15 |
| $A_2$ | 0.95 | 1.00 | 1.05 | 0.95 | 1.00 | 1.05 | 0.95 | 1.00 | 1.05 |
| D/E | 12.00 BSC | | | 12.00 BSC. | | | 16.00 BSC. | | |
| $D_1/E_1$ | 10.00 BSC | | | 10.00 BSC. | | | 14.00 BSC. | | |
| b | 0.30 | 0.37 | 0.45 | 0.17 | 0.22 | 0.27 | 0.17 | 0.22 | 0.27 |
| c | 0.09 | — | 0.20 | 0.09 | — | 0.20 | 0.09 | — | 0.20 |
| e | 0.80 BSC. | | | 0.50 BSC. | | | 0.50 BSC. | | |
| L | 0.45 | 0.60 | 0.75 | 0.45 | 0.60 | 0.75 | 0.45 | 0.60 | 0.75 |
| ccc | — | — | 0.10 | — | — | 0.08 | — | — | 0.08 |
| ddd | — | — | 0.20 | — | — | 0.08 | — | — | 0.08 |
| N | 44 | | | 64 | | | 100 | | |
| REF. | JEDEC MS-026-ACB | | | JEDEC MS-026-ACD | | | JEDEC MS-026-AED | | |

NOTES:

1. ALL DIMENSIONS AND TOLERANCES CONFORM TO ANSI Y14.5M-1982.
2. DIMENSIONS D1 AND E1 DO NOT INCLUDE MOLD PROTRUSION. ALLOWABLE MOLD PROTRUSION SHALL NOT EXCEED 0.25mm PER SIDE.
3. THE TOP OF PACKAGE MAY BE SMALLER THAN THE BOTTOM OF PACKAGE BY 0.15mm.

44, 64, 100-PIN PLASTIC VERY THIN QFP (VQ44, VQ64, VQ100)