查询AN6876供应商 捷多邦，专业PCB打样工厂，24小时加急出货

AN6876

5-Dot LED Driver Circuit

■ Outline

The AN6876 is an integrated circuit designed for driving 5-dot LED so that LED may light linearly for input signal. Because the adjust pin for output current is provided, the brightness of LED can be controlled.

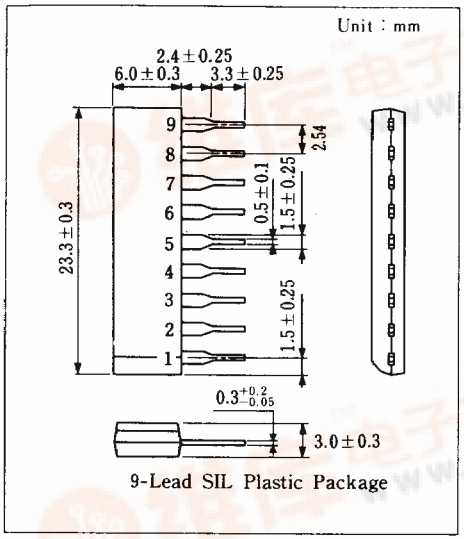

9-Lead SIL Plastic Package

■ Features

- 5-LED bar graph or dot display drive
- Linear response with respect to input
- Brightness externally adjustable
- High output current, suitable for green LED drive
- Lamp ON/OFF hysteresis, no flickering by noise

■ Block Diagram

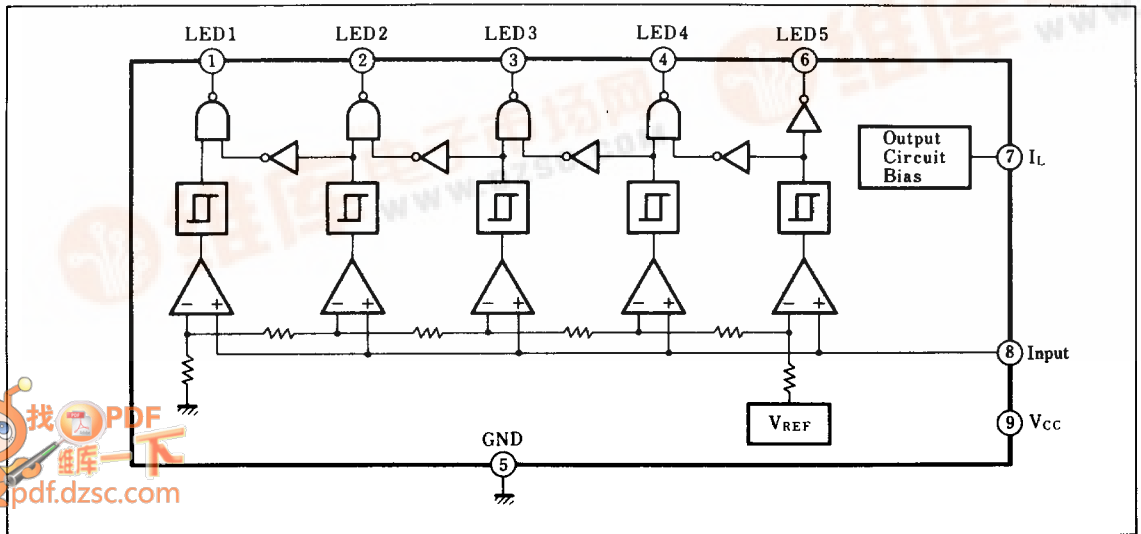

找PDF 维库一下 pdf.dzsc.com

■ Pin

Pin No.	Pin Name	Pin No.	Pin Name
1	LED1 Output	6	LED5 Output
2	LED2 Output	7	LED Current Set Input
3	LED3 Output	8	Non Inverting Input
4	LED4 Output	9	V_{CC}
5	GND		

■ Absolute Maximum Ratings (Ta=25℃)

Item		Symbol	Rating		Unit
Voltage	Supply Voltage	V_{CC}	−0.5	+18	V
	Circuit Voltage	V_{8-5}	−0.5	+16	V
	Load Current Set Input Voltage	V_{7-5}		+16	V
	Output Voltage*1	V_O	−0.5	+16	V
Current	Supply Current*1	I_{CC}	18		mA
	Load Current Set Input Current*2	I_7	5		mA
	Output Current*1	I_O	20		mA
Power Dissipation (T_a=75℃)		P_D	550		mW
Temperature	Operating Ambient Temperature	T_{opr}	−20～+75		℃
	Storage Temperature	T_{stg}	−55～+150		℃

*1 Output pins ①, ②, ③, ④ and ⑥
*2 I_7 which can be set I_O=20mA is assumed to be the absolute rated value.

■ Electrical Characteristics (Ta=25℃)

Item		Symbol	Test Circuit	Condition	min.	typ.	max.	Unit
Input Voltage (LED ON)	LED1	$V_{I(ON)1}$	2	V_{CC}=16V	1.63	1.83	2.00	V
	LED2	$V_{I(ON)2}$			2.20	2.43	2.64	V
	LED3	$V_{I(ON)3}$			2.80	3.03	3.27	V
	LED4	$V_{I(ON)4}$			3.38	3.64	3.88	V
	LED5	$V_{I(ON)5}$			3.92	4.14	4.37	V
Load Current	Pin6	I_6	2	V_{CC}=16V, V_O=1.2V, I_7=4.25mA	13	16		mA
	Pin1～4	I_1～I_4	2	V_{CC}=16V, V_O=2.5V, I_7=4.25mA	13	16		mA
	Pin1～4,6	I_1～I_4, I_6	2	V_{CC}=16V, V_O=16V, I_7=4.25mA		16	19	mA
Input Current		I_8	1	V_{CC}=16V, V_{8-5}=8.5V			50	μA
		I_8	1	V_{CC}=16V, V_{8-5}=16V			5	mA
Supply Current		I_9	1	V_{CC}=16V, V_{8-5}=16V			18	mA
Output Pin Leakange Current		I_1～I_4, I_6	2	V_{CC}=16V, V_O=16V			15	μA

Note) Operating Supply Voltage Range : $V_{CC(opr)}$=12～16V

Test Circuit 1 (I_8, I_9)

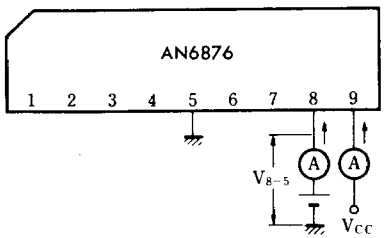

Test Circuit 2 ($V_{I(ON)1\sim5}$, $V_{I(OFF)1\sim5}$, I_6, I_1～I_4)

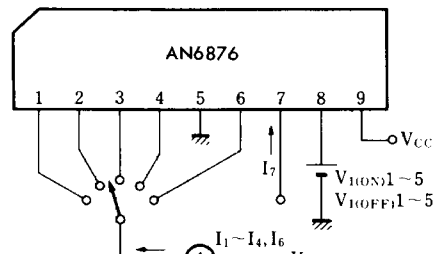

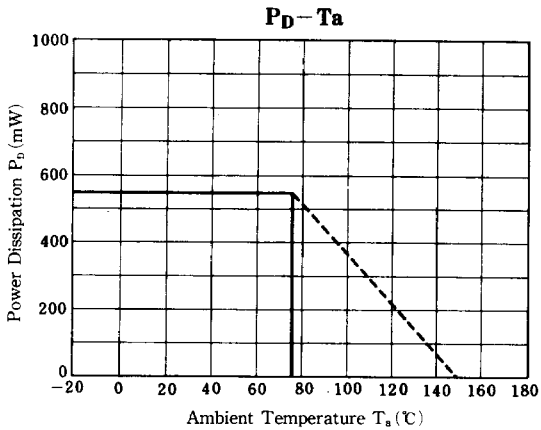

■ Application Circuit

1. Bar Display

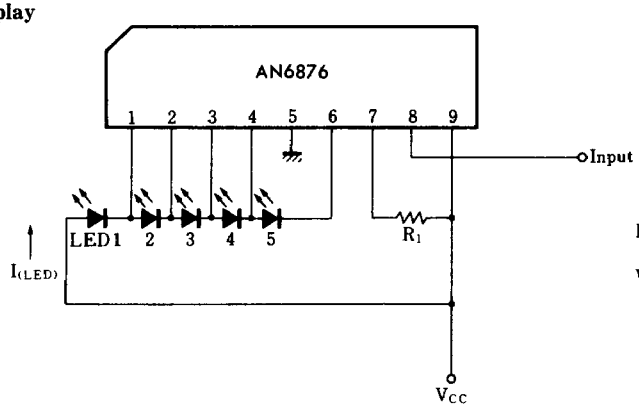

$$R_1 \fallingdotseq \frac{V_{CC}-0.7}{I_{(LED)}} \times 4 - 270$$

$$V_{CC} \geqq V_F \times 5 + 1.2$$

Note) When the voltage of Pin ⑥ is high for 5-dot LED ON, insert the resistor into the anode of LED, to reduce P_D.
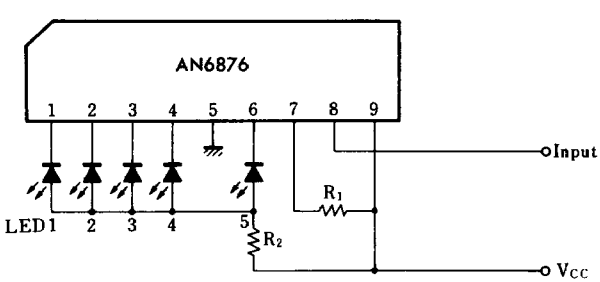
2. Dot Display