查询AP1084D18G-U供应商 捷多邦，专业PCB打样工厂，24小时加急出货

AP1084

5A LOW DROPOUT POSITIVE ADJUSTABLE OR FIXED-MODE REGULATOR

Features

- 1.4V Maximum Dropout at Full Load Current
- Built-in Thermal Shutdown
- Output Current Limiting
- Adjustable Output Voltage or Fixed 1.5V, 1.8V, 2.5V, 3.3V, 5.0V
- Fast Transient Response
- Good Noise Rejection
- Lead-Free Package: TO252-3L, TO263-3L, and TO220-3L
- TO252-3L: Available in "Green" Molding Compound (No Br, Sb) (Note 1)
- Lead Free Finish/RoHS Compliant for Lead Free products (Note 2)

General Description

AP1084 is a low dropout positive adjustable or fixed-mode regulator with 5.0A output current capability. The product is specifically designed to provide well-regulated supply for low voltage IC applications such as high-speed bus termination and low current 3.3V logic supply. AP1084 is also well suited for other applications such as VGA cards. AP1084 is guaranteed to have lower than 1.4V dropout at full load current making it ideal to provide well-regulated outputs of 1.25 to 3.3V with 4.7 to 12V input supply.

Ordering Information

AP1084 X XX X X

Package	Vout	Lead Free	Packing
D : TO252-3L	Blank : Adj	L : Lead Free	-U : Tube
K : TO263-3L	15 = 1.5V	G : Green (Note 1)	-13 : Taping
T : TO220-3L	18 = 1.8V		
	25 = 2.5V		
	33 = 3.3V		
	50 = 5.0V		

Note: 1. Green is only available for TO252-3L.
2. RoHS revision 13.2.2003. Glass and High Temperature Solder Exemptions Applied, see *EU Directive Annex Notes 5 and 7*.

Device	Package Code	Packaging (Note 3)	Tube/Bulk		13" Tape and Reel	
			Quantity	Part Number Suffix	Quantity	Part Number Suffix
AP1084D	D	TO252-3L	80	-U	2500/Tape & Reel	-13
AP1084K	K	TO263-3L	50	-U	800/Tape & Reel	-13
AP1084T	T	TO220-3L	50	-U	NA	NA

Note: 3. Pad layout as shown on Diodes Inc. suggested pad layout document AP02001, which can be found on our website at http://www.diodes.com/datasheets/ap02001.pdf.

© Diodes Incorporated

Block Diagram

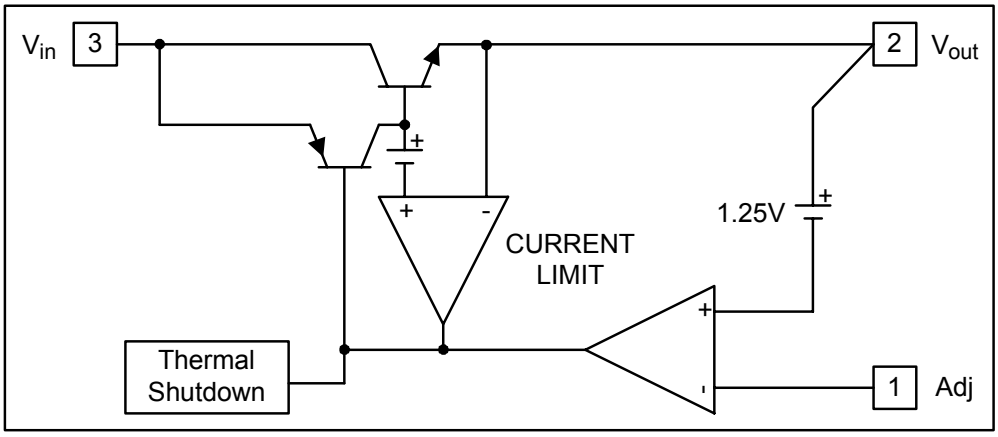

Pin Assignment

TO263-3L

FRONT VIEW

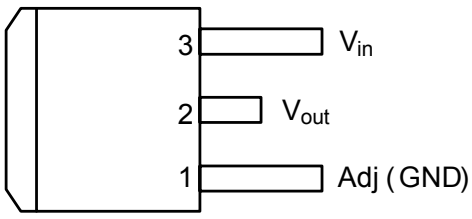

Tab is V_{out}

TO252-3L

FRONT VIEW

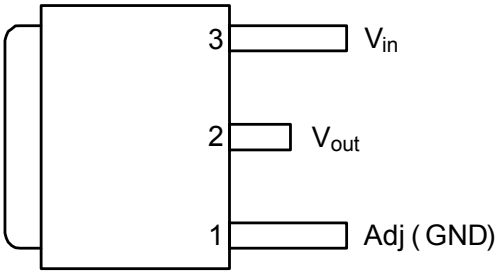

Tab is V_{out}

TO220-3L

FRONT VIEW

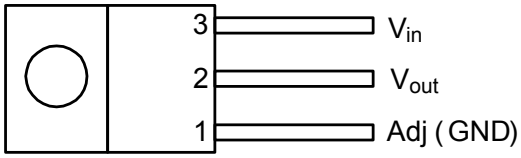

Tab is V_{out}

© Diodes Incorporated

Pin Description

Name	I/O	Function	
		TO263/ 252/220	
Adj (GND)	I	1	Adjustable (Ground only for fixed mode) A resistor divider from this pin to the V_{out} pin and ground sets the output voltage (Ground only for Fixed-Mode).
V_{out}	O	2	The output of the regulator. A minimum of 10uF (0.15Ω ≤ ESR ≤ 20Ω) capacitor must be connected from this pin to ground to insure stability.
V_{in}	I	3	The input pin of regulator. Typically a large storage capacitor (0.15Ω ≤ ESR ≤ 20Ω) is connected from this pin to ground to insure that the input voltage does not sag below the minimum dropout voltage during the load transient response. This pin must always be 1.4V (1.3V) higher than V_{out} in order for the device to regulate properly.

Absolute Maximum Ratings

Symbol	Parameter	Rating	Unit
V_{in}	DC Supply Voltage	-0.3 to 12	V
T_{ST}	Storage Temperature	-65 to +150	^oC
T_{OP}	Operating Junction Temperature Range	0 to +125	^oC
T_M	Maximum Junction Temperature	150	^oC

© Diodes Incorporated

Electrical Characteristics (Under Operating Conditions)

Sym.	Parameter	Conditions	Min.	Typ.	Max.	Unit
V_{REF}	Reference Voltage	Io = 10mA, T_A = 25°C, (V_{in}-V_{out}) = 1.5V	1.225	1.250	1.275	V
Line Regulation	AP1084-XXX	I_O = 10mA, V_{OUT}+1.5V<V_{IN}<12V, T_A = 25°C			0.2	%
	AP1084-1.5	I_{OUT} = 10mA, T_A = 25°C, 3V≦V_{IN}≦12V	1.470	1.500	1.530	V
	AP1084-1.8	I_{OUT} = 10mA, T_A = 25°C, 3.3V≦V_{IN}≦12V	1.764	1.800	1.836	V
	AP1084-2.5	I_{OUT} = 10mA, T_A = 25°C, 4V≦V_{IN}≦12V	2.450	2.500	2.550	V
	AP1084-3.3	I_{OUT} = 10mA, T_A = 25°C, 4.8V≦V_{IN}≦12V	3.235	3.300	3.365	V
	AP1084-5.0	I_{OUT} = 10mA, T_A = 25°C, 6.5V≦V_{IN}≦12V	4.900	5.000	5.100	V
Load Regulation	AP1084-Adj	V_{IN} = 3.3V, 0mA<Io<5A, T_A = 25°C C			1	%
	AP1084-1.5	V_{IN} = 3V, 0mA<Io<5A, T_A = 25°C (Note 4, 5)		12	15	mV
	AP1084-1.8	V_{IN} = 3.3V, 0mA<Io<5A T_A = 25°C (Note 4, 5)		15	18	mV
	AP1084-2.5	V_{IN} = 4V, 0mA < Io < 5A T_A = 25°C (Note 4, 5)		20	25	mV
	AP1084-3.3	V_{IN} = 5V, 0mA < Io < 5A, T_A = 25°C (Note 4, 5)		26	33	mV
	AP1084-5.0	V_{IN} = 8V, 0mA < Io < 5A, T_A = 25°C (Note 4, 5)		40	50	mV
ΔVo	Dropout Voltage	I_o = 5.0A (ΔV$_{out}$ = 1% V$_{out}$)		1.3	1.4	V
	Current Limit	V_{in}-V_{out} = 5V	5.1			A
	Minimum Load Current			5	10	mA
	Temperature Stability	I_o = 10mA		0.5		%
θ_{JA}	Thermal Resistance Junction-to-Ambient (No heat sink; No air flow)	TO252-3L TO263-3L TO220-3L		98 95 83		°C/W
θ_{JC}	Thermal Resistance Junction-to-Case	TO252-3L: Control Circuitry/Power Transistor TO263-3L: Control Circuitry/Power Transistor TO220-3L: Control Circuitry/Power Transistor		10 19 13		°C/W

Note: 4. See thermal regulation specifications for changes in output voltage due to heating effects. Line and load regulation are measured at a constant junction temperature by low duty cycle pulse testing. Load regulation is measured at the output lead = 1/18" from the package.

5. Line and load regulation are guaranteed up to the maximum power dissipation of 15W. Power dissipation is determined by the difference between input and output and the output current. Guaranteed maximum power dissipation will not be available over the full input/output range.

© Diodes Incorporated

Typical Circuit

(1) TO263/252/220

5.0V to 3.3V Fixed Mode Regulator

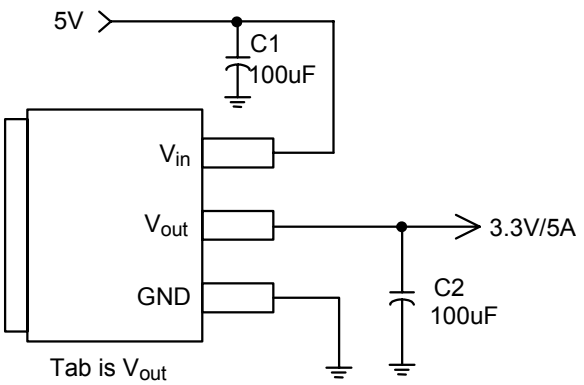

Adjustable Regulator

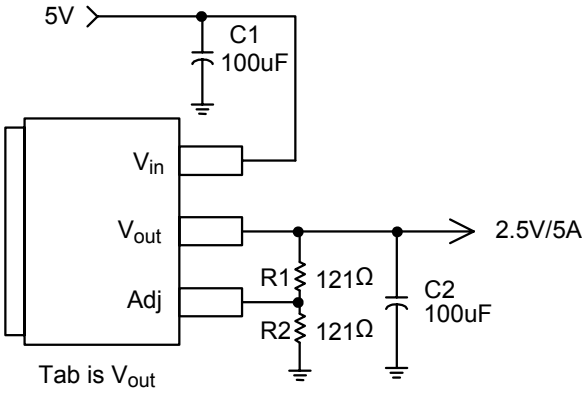

Note: $V_O = V_{REF} * (1 + \frac{R_2}{R_1})$

© Diodes Incorporated

Functional Description

Introduction

The AP1084 adjustable Low Dropout (LDO) regulator is a 3 terminal device that can easily be programmed with the addition of two external resistors to any voltages within the range of 1.25V to Vin-1.4V. The AP1084 only needs 1.4V differential between V_{in} and V_{out} to maintain output regulation. In addition, the output voltage tolerances are also extremely tight and they include the transient response as part of the specification. For example, Intel VRE specification calls for a total of +/- 100mV including initial tolerance, load regulation and 0 to 5.0A load step.

The AP1084 is specifically designed to meet the fast current transient needs as well as providing an accurate initial voltage, reducing the overall system cost with the need for fewer output capacitors.

Output Voltage Setting

The AP1084 can be programmed to any voltages in the range of 1.25V to Vin-1.4V with the addition of R1 and R2 external resistors according to the following formula:

$V_{out} = V_{ref}$ (1+ R2/R1) +I_{adj} *R2 , where V_{ref} = 1.25 typically, I_{adj} = 55uA typically R1 & R2 as shown below:

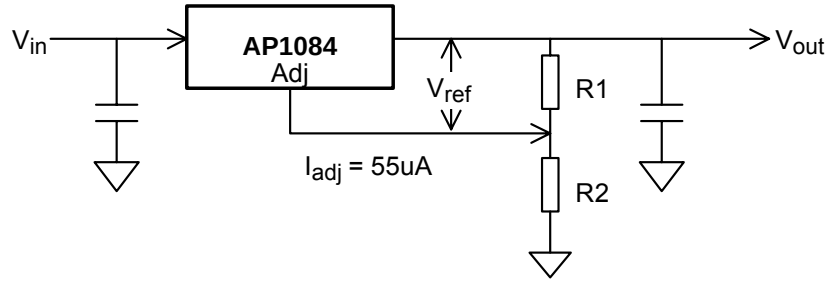

The AP1084 keeps a constant 1.25V between the output pin and the adjust pin. By placing a resistor R1 across these two pins a constant current flows through R1, adding to the **Iadj** current and into the R2 resistor producing a voltage equal to the (1.25/R1)*R2+Iadj*R2 which will be added to the 1.25V to set the output voltage. This is summarized in the above equation. Since the minimum load current requirement of the AP1084 is 10mA, R1 is typically selected to be 121Ω resistor so that it automatically satisfies the minimum current requirement. Notice that since Iadj is typically in the range of 55uA it only adds a small error to the output voltage and should only be considered when a very precise output voltage setting is required. For example, in a typical 3.3V application where R1=121Ω and R2=200Ω the error due to **Iadj** is only 0.3% of the nominal set point.

Load Regulation

Since the AP1084 is only a 3 terminal device, it is not possible to provide true remote sensing of the output voltage at the load. The best load regulation is achieved when the bottom side of R2 is connected to the load and the top-side of R1 resistor is connected directly to the case or the V_{out} pin of the regulator and not to the load. It is important to note that for high current applications, this can re-present a significant percentage of the overall load regulation and one must keep the path from the regulator to the load as short as possible to minimize this effect.

Stability

The AP1084 requires the use of an output capacitor as part of the frequency compensation in order to make the regulator stable. For most applications a minimum of 10uF aluminum electrolytic capacitor insures both stability and good transient response.

Thermal Design

The AP1084 incorporates an internal thermal shutdown that protects the device when the junction temperature exceeds the maximum allowable junction temperature. Although this device can operate with junction temperatures in the range of **150°C**, it is recommended that the selected heat sink be chosen such that during maximum continuous load operation the junction temperature is kept below that temperature.

Layout Consideration

The output capacitors must be located as close to the V_{out} terminal of the device as possible. It is recommended to use a section of a layer of the PC board as a plane to connect the V_{out} pin to the output capacitors to prevent any high frequency oscillation that may result due to excessive trace inductance.

© Diodes Incorporated

Performance Characteristics

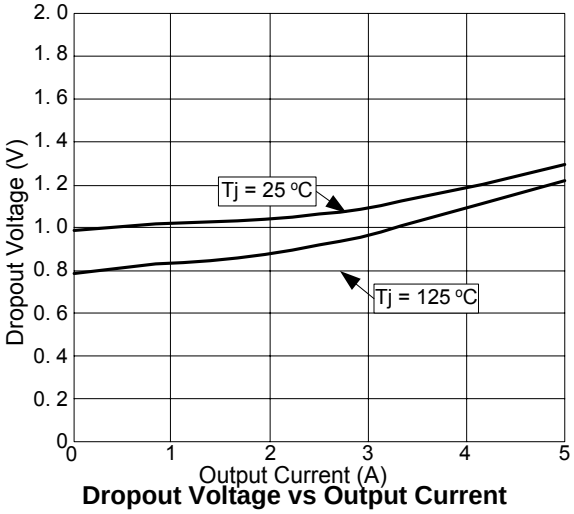

Dropout Voltage vs Output Current

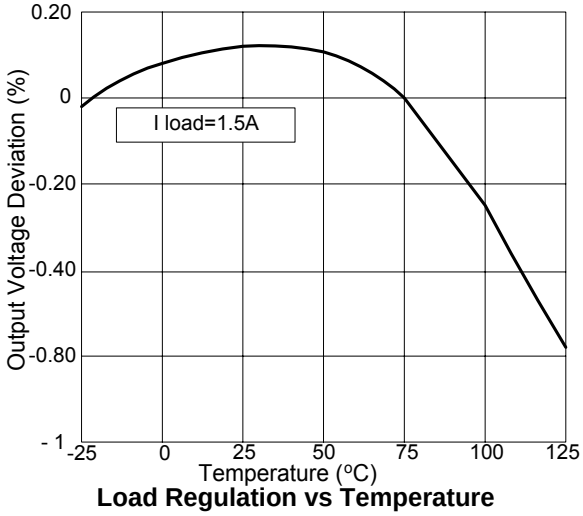

Load Regulation vs Temperature

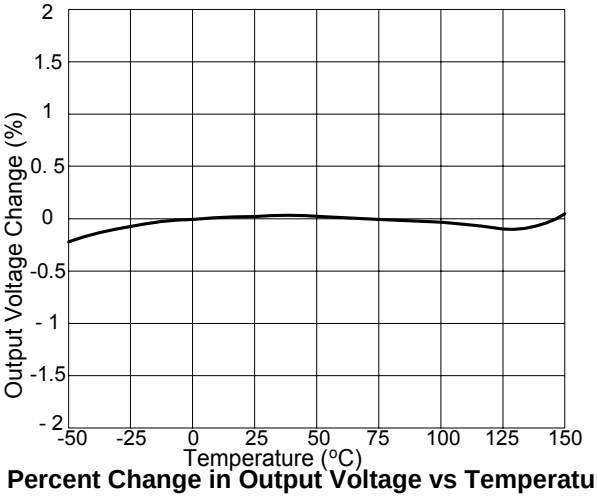

Percent Change in Output Voltage vs Temperature

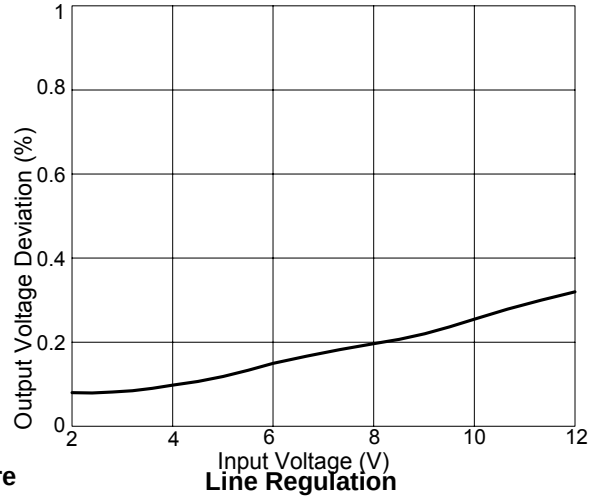

Line Regulation

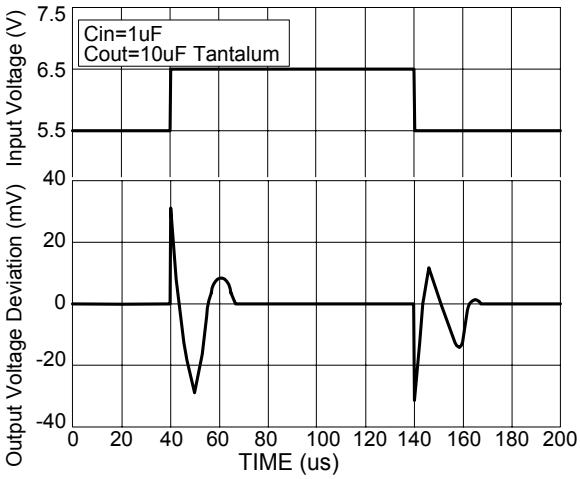

Line Transient Response

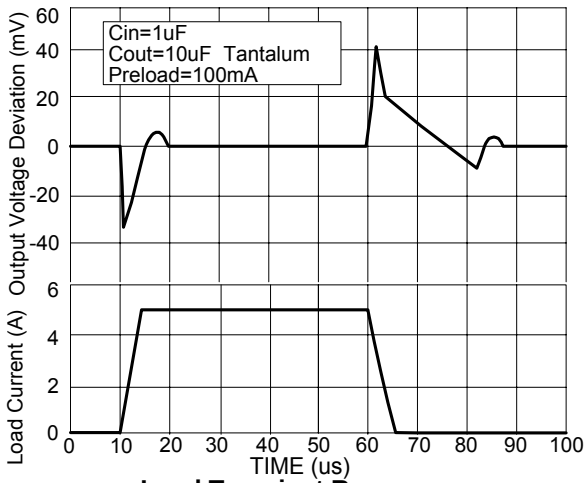

Load Transient Response

© Diodes Incorporated

Marking Information

(1) TO252-3L

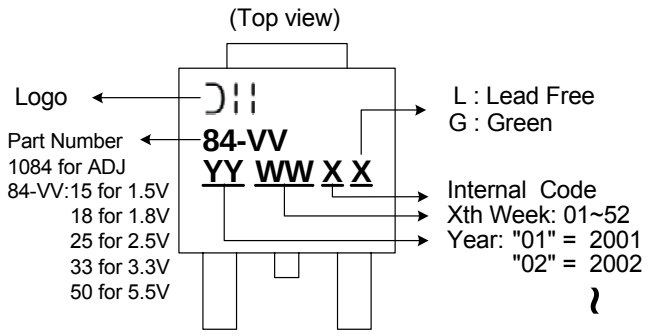

(2) TO220-3L / TO263-3L

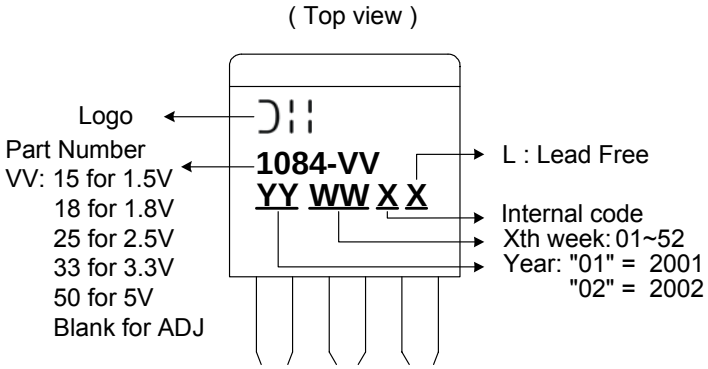

© Diodes Incorporated

Package Information (unit: mm)

(1) TO263-3L

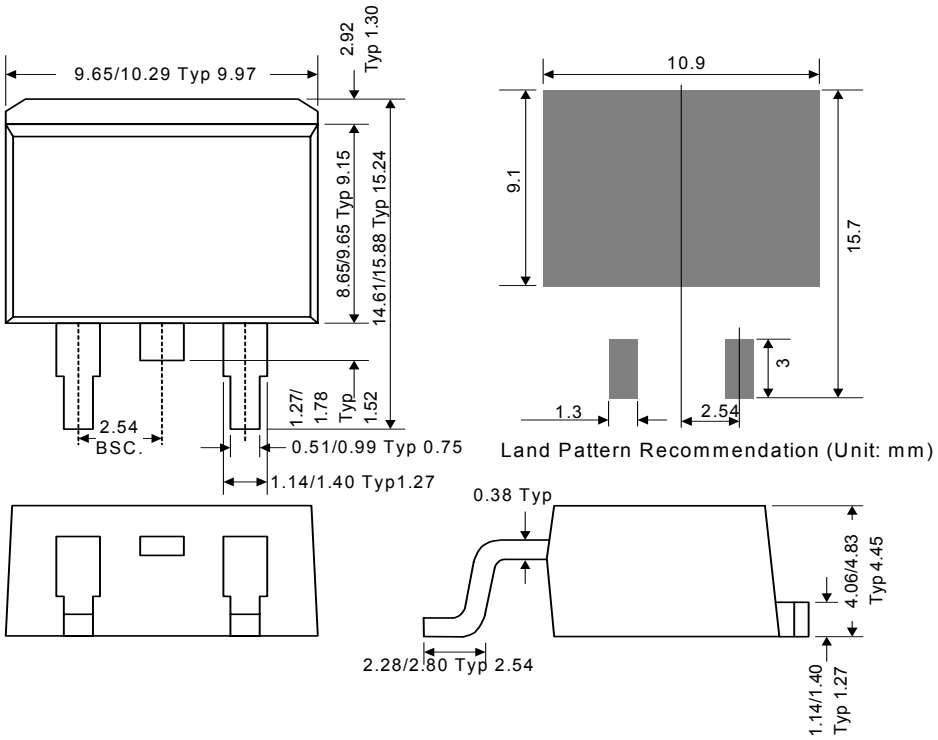

(2) TO252-3L

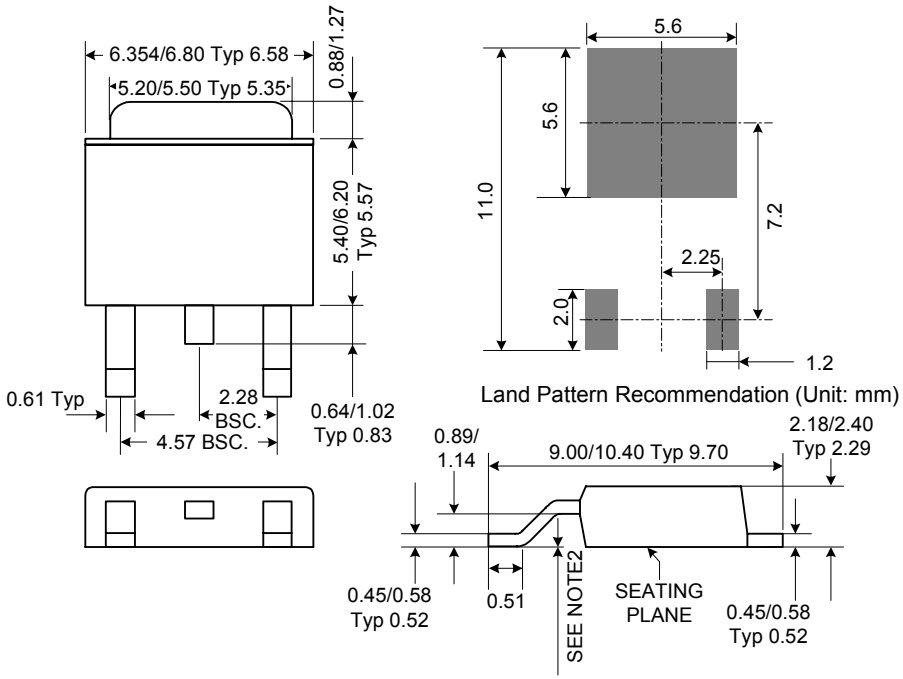

© Diodes Incorporated

Package Information (Continued)

(3) TO220-3L

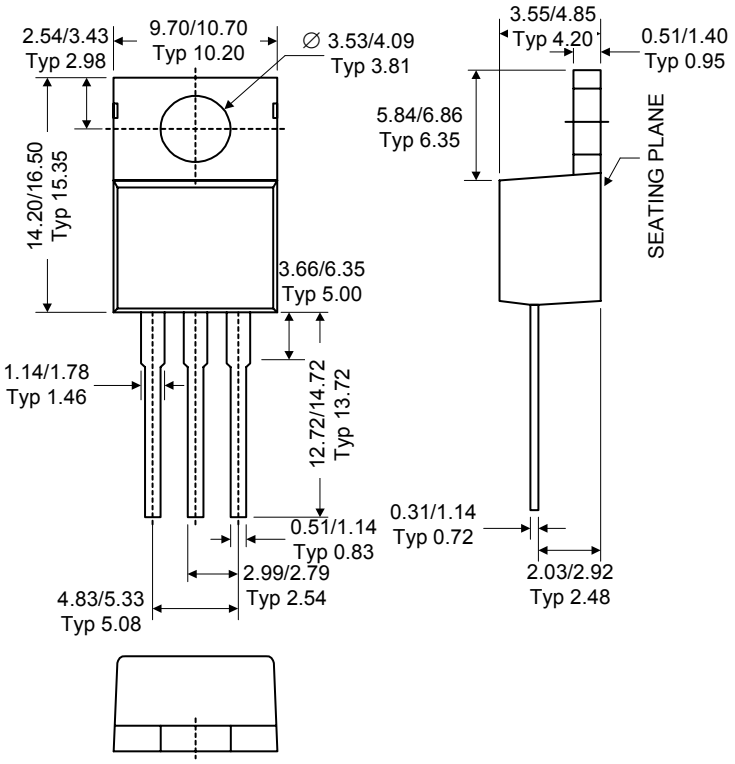

IMPORTANT NOTICE

Diodes Incorporated and its subsidiaries reserve the right to make modifications, enhancements, improvements, corrections or other changes without further notice to any product herein. Diodes Incorporated does not assume any liability arising out of the application or use of any product described herein; neither does it convey any license under its patent rights, nor the rights of others. The user of products in such applications shall assume all risks of such use and will agree to hold Diodes Incorporated and all the companies whose products are represented on our website, harmless against all damages.

LIFE SUPPORT

Diodes Incorporated products are not authorized for use as critical components in life support devices or systems without the expressed written approval of the President of Diodes Incorporated.

© Diodes Incorporated