查询ASMT-SWBM-NU803供应商 捷多邦，专业PCB打样工厂，24小时加急出货

ASMT-SWBM-Nxxxx
Surface Mount LED Indicator

AVAGO TECHNOLOGIES

Data Sheet

Lead (Pb) Free
RoHS 6 fully compliant

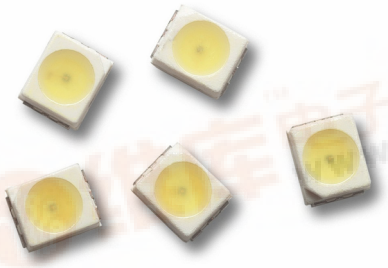

Description

The Long-Life White PLCC-4 SMT LEDs is the latest extension to our White PLCC-4 packages where besides having higher flux output, the Long-Life White PLCC-4 is designed to work under a wide range of environment condition, with reliable and stable performance. The structure and materials used for Long-Life White PLCC-4 enable the packages to endure minimal degradation and hence consistent performance throughout the product life time. Moreover, the Long-Life White PLCC-4 SMT LEDs is a 8-binned product for color, an enhance feature from the previous PLCC-4 white who is binned with 6 color binning only. These tigher color binning will ensure better color grouping with better uniformity.

The Long-Life White PLCC-4 SMT LEDs is suitable to be used in Interior Automotive application, Electronics Signs and Signals application. Besides that, the super wide viewing angle at 120° makes these LEDs ideally suited for instrument cluster panel, push button, or general backlighting in automotive interior, office equipment, industrial equipment, and home appliances. The flat top emitting surface makes it easy for these LEDs to mate with light pipes. With the built-in reflector pushing up the intensity of the light output, these super high brightness LEDs can be used in localized area ambience lighting in applications such as vanity mirror light, cabin light, and car door puddle light. The white color backlighting is suitable to backlight color LCD screens in applications such as GPS (global positioning system) screen in cars.

To facilitate easy pick and place assembly, the LEDs are packed in EIA-compliant tape and reel. Every reel will be shipped in single intensity and color bin, to provide close uniformity.

These LEDs are compatible with IR solder reflow process.

Features

- Industry standard PLCC-4
- High reliability LED package
- Long Life, up to 50,000 hours at 25°C
- High brightness using InGaN dice technologies
- High optical efficiency
- Super wide viewing angle at 120°
- Tight white color binning – 8 bins
- Available is 8mm carrier tape on 7-inch reel
- Stabile & Consistent performance with minimum degradation with Silicone Encapsulation
- JEDEC MSL 2a

Applications

- Interior & exterior automotive
  - Instrument panel backlighting
  - Central console backlighting
  - Navigation and audio system backlighting
  - Dome/Map lighting
  - Push button backlighting
  - Number plate illumination
  - Rear reverse lamp indicator
- Electronic signs and signals
  - Decorative lighting
- Office automation, home appliances, industrial equipment
  - Front panel backlighting
  - Push button backlighting

CAUTION: *ASMT-SWBM-Nxxxx LEDs are Class 2 ESD sensitive. Please observe appropriate precautions during handling and processing. Refer to Avago Application Note AN-1142 for additional details.*

找PDF 维库一下 pdf.dzsc.com

Package Drawing

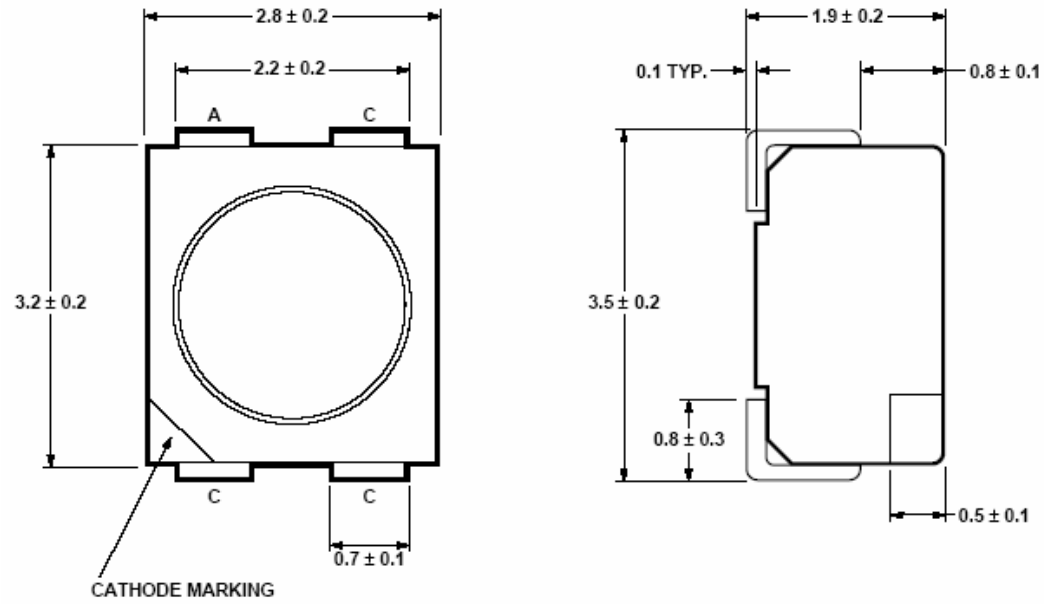

NOTES:
ALL DIMENSIONS IN mm.
ELECTRICAL CONNECTION BETWEEN ALL CATHODES IS RECOMMENDED.

Table 1. Device Selection Guide

Color	Part Number	Min. I_V (mcd)	Typ. I_V (mcd)	Max. I_V (mcd)	Test Current (mA)	Dice Technology
White	ASMT-SWBM-NU803	560.00	1100.00	1400.00	30	InGaN

Notes:
1. The luminous intensity I_V, is measured at the mechanical axis of the lamp package. The actual peak of the spatial radiation pattern may not be aligned with this axis.
2. I_V tolerance ±12%

Part Numbering System

A S M T – S X_1 B M – NX_2 X_3 X_4 X_5

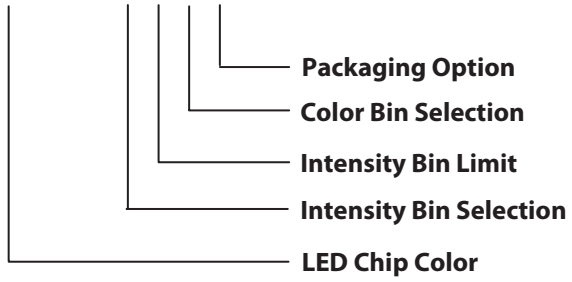

Table 2. Absolute Maximum Ratings (T_A = 25 °C)

Parameters	ASMT-SWBM-Nxxxx
DC Forward Current [1]	50 mA
Peak Forward Current [2]	300 mA
Power Dissipation	215 mW
Reverse Voltage	4 V
Junction Temperature	125 °C
Operating Temperature	- 40 °C to + 110 °C
Storage Temperature	- 40 °C to + 110°C

Notes:
1. Derate linearly as shown in Figure 4.
2. Duty Factor = 0.5%, Frequency = 500Hz.

Table 3. Optical Characteristics (T_A = 25 °C)

Color	Part Number	Dice Technology	Typical Chromaticity Coordinates[1]		Viewing Angle $2\theta_{½}$ [2] (Degrees)	Luminous Efficacy η_V [3] (lm/W)	Luminous Efficiency η_e (lm/W)	Luminous Intensity / Total Flux [4, 5] I_V (mcd) / ϕ_V (lm)
			x	y	Typ.	Typ.	Typ.	Typ
White	ASMT-SWBM-Nxxxx	InGaN	0.318	0.318	120	274	27	0.37

Notes:
1. The chromaticity coordinates are derived from the CIE 1931 Chromaticity Diagram and represent the perceived color of the device.
2. $\theta_{½}$ is the off-axis angle where the luminous intensity is ½ the peak intensity.
3. Radiant intensity, Ie in watts / steradian, may be calculated from the equation $I_e = I_V / \eta_V$, where I_V is the luminous intensity in candelas and η_V is the luminous efficacy in lumens / watt.
4. ϕ_V is the total luminous flux output as measured with an integrating sphere after the device has stabilized.
5. Flux tested at mono pulse conditions.

Table 4. Electrical Characteristics (T_A = 25 °C)

Part Number	Forward Voltage V_F (Volts) @ I_F = 30 mA [1]		Reverse Voltage V_R @ 10µA	Thermal Resistance $R\theta_{J-P}$ (°C/W)
	Typ.	Max.	Min.	
ASMT-SWBM-Nxxxx	3.5	4.35	4	110

Notes:
1. Tolerance = ±0.1V

Table 5. Targeted Mean Lifetime

Conditions		Mean Luminous Maintenance (L50)	Unit
I_F = 25mA	T_A = 85°C	25,000	Operating hours
I_F = 25mA	T_A = 25°C	50,000	Operating hours

Notes:
1. The typical data or calculated correlations can only reflect statistical figure, hence can only be used for reference only
2. All data shown based on Thermal Resistance $R\theta_{JA}$=300°C/W.
3. Due to technical improvement,Avago technologies reserved right to change the typical data without any further notice.

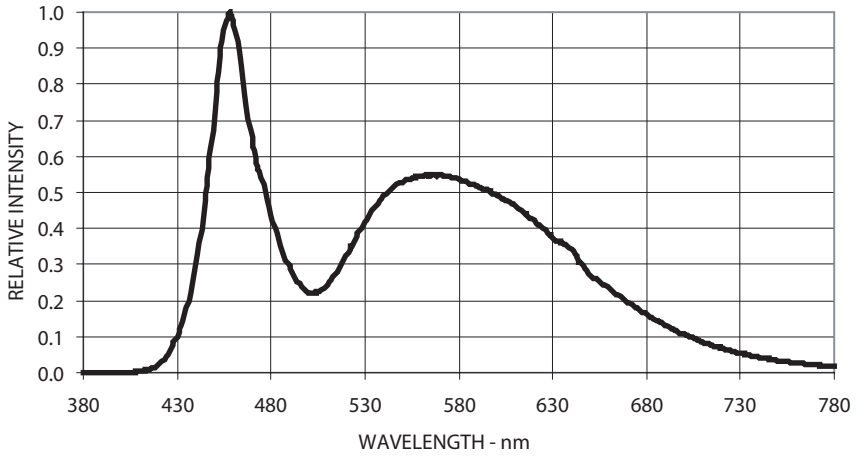

Figure 1. Relative Intensity Vs. Wavelength

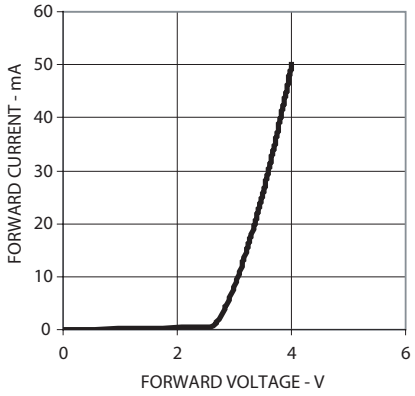

Figure 2. Forward Current Vs. Forward Voltage

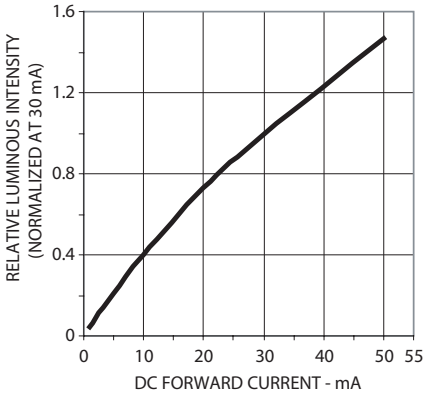

Figure 3. Relative Intensity Vs. Forward Current

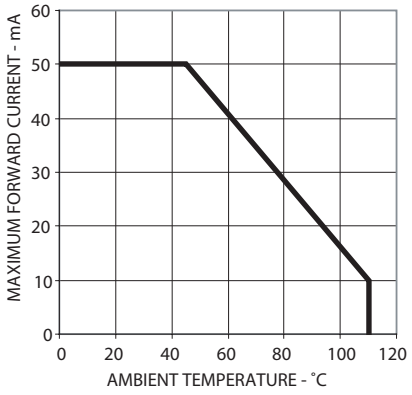

Figure 4a. Maximum Forward Current Vs. Ambient Temperature. Derated Based on T_{JMAX} = 125°C, $R\theta_{JA}$=300°C/W

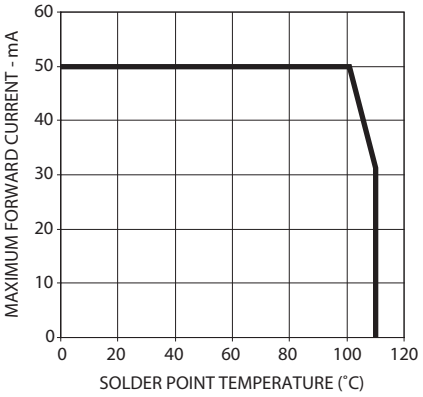

Figure 4b. Maximum forward current vs. solder point temperature. Derated Based on T_{JMAX} = 125°C, $R\theta_{JP}$=110°C/W

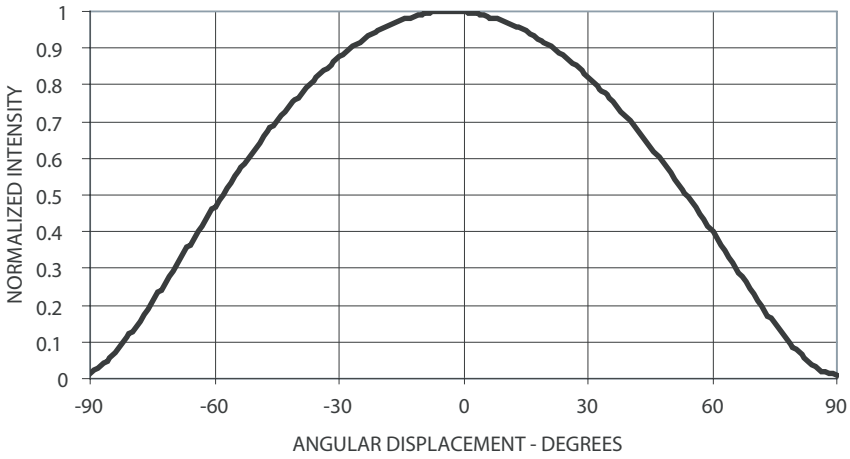

Figure 5. Radiation Pattern

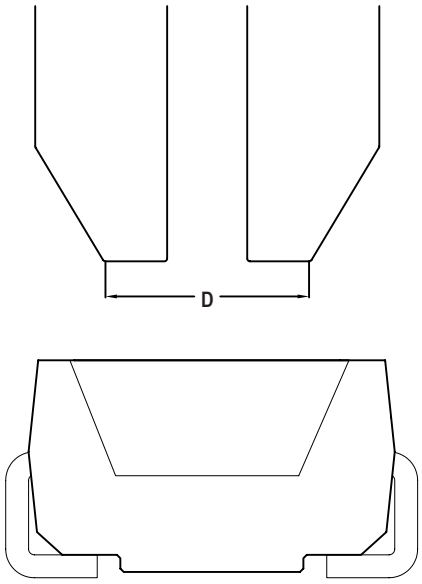

Note: Diameter "D" should be smaller than 2.2mm

Figure 6. Recommended Pick and Place Nozzle Size

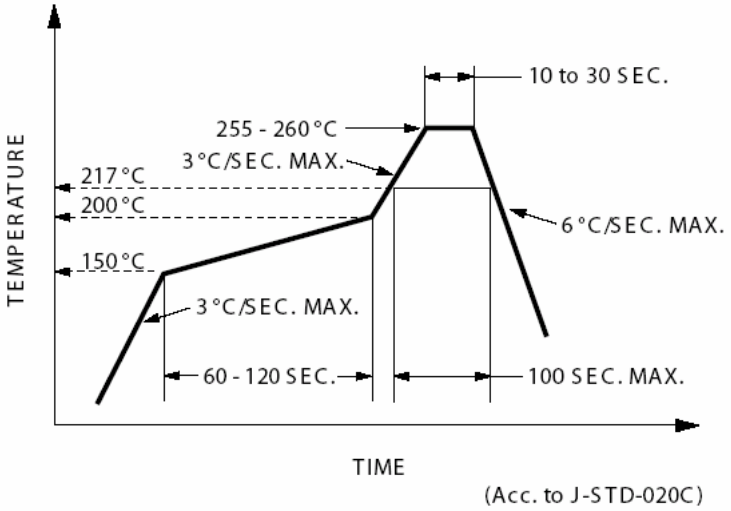

Figure 7. Recommended Pb-free Reflow Soldering Profile

Note: For detail information on reflow soldering of Avago surface mount LEDs, do refer to Avago Application Note AN 1060 Surface Mounting SMT LED Indicator Components

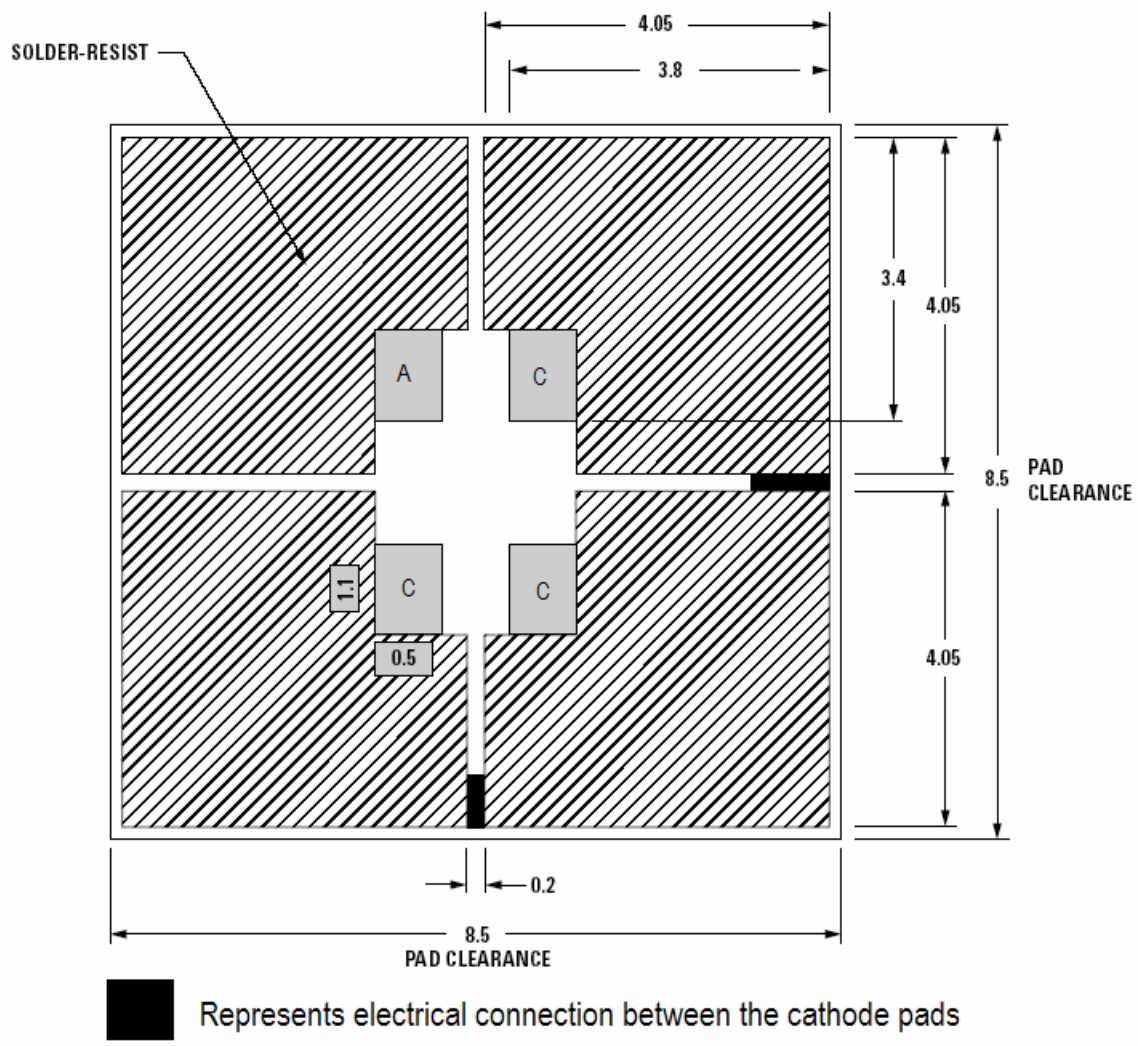

Figure 8. Recommended Soldering Pad Pattern

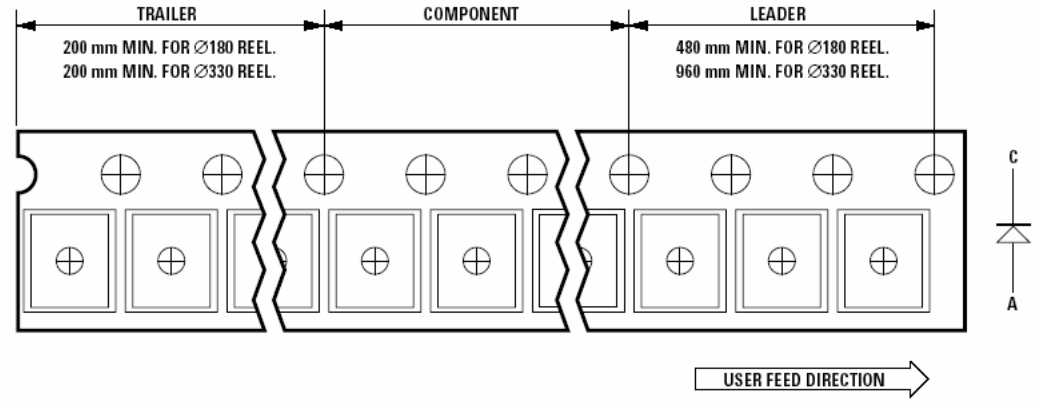

Figure 9. Tape Leader and Trailer Dimensions

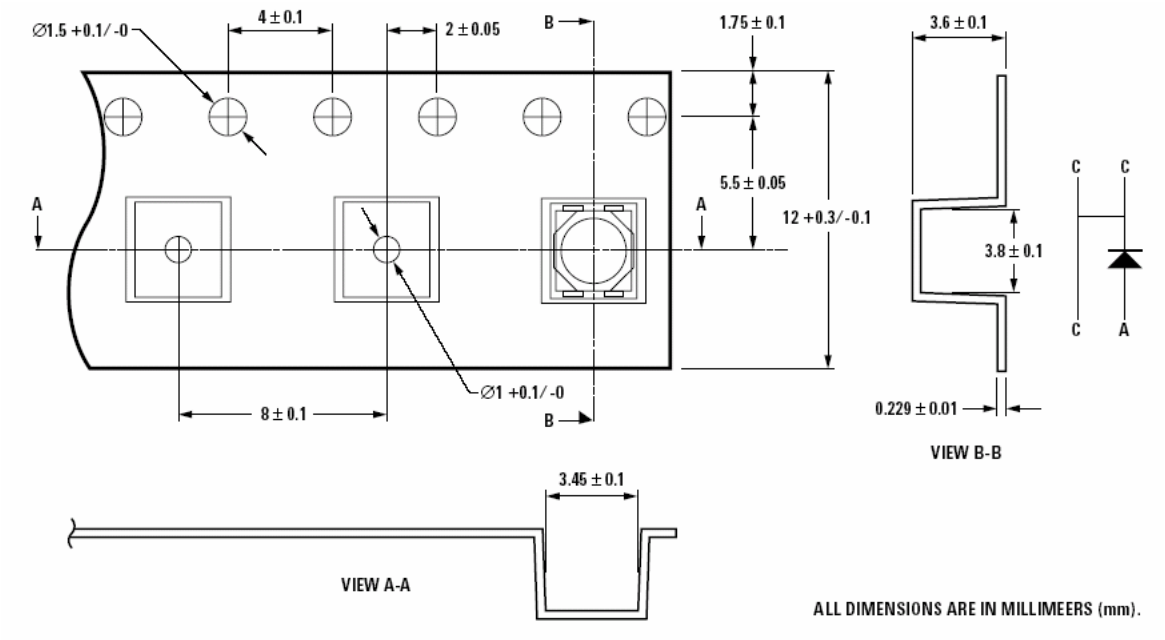

Figure 10. Tape Dimensions

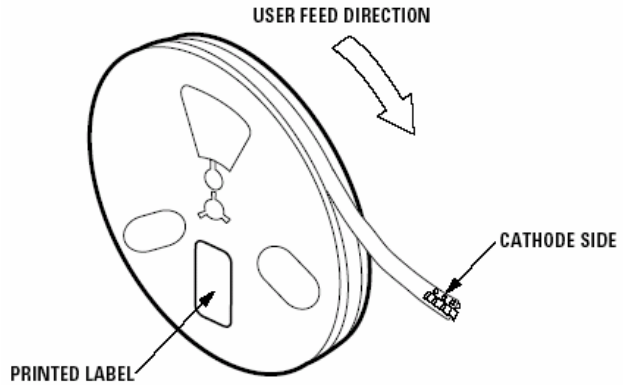

Figure 11. Reeling Orientation

This product is qualified as Moisture Sensitive Level 2a per Jedec J-STD-020. Precautions when handling this moisture sensitive product is important to ensure the reliability of the product. Do refer to Avago Application Note AN5305 Handling of Moisture Sensitive Surface Mount Devices for details.

A. Storage before use

- Unopen moisture barrier bag (MBB) can be stored at <40°C/90%RH for 12 months. If the actual shelf life has exceeded 12 months and the HIC indicates that baking is not required, then it is safe to reflow the LEDs per the original MSL rating.
- It is not recommended to open the MBB prior to assembly (e.g. for IQC).

B. Control after opening the MBB

- The humidity indicator card (HIC) shall be read immediately upon opening of MBB.
- The LEDs must be kept at <30°C / 60%RH at all time and all high temperature related process including soldering, curing or rework need to be completed within 672 hours.

C. Control for unfinished reel

- For any unuse LEDs, they need to be stored in sealed MBB with desiccant or desiccator at <5%RH.

D. Control of assembled boards

- If the PCB soldered with the LEDs is to be subjected to other high temperature processes, the PCB need to be stored in sealed MBB with desiccant or desiccator at <5%RH to ensure no LEDs have exceeded their floor life of 672 hours.

E. Baking is required if:

- "10%" or "15%" HIC indicator turns pink.
- The LEDs are exposed to condition of >30°C / 60% RH at any time.
- The LEDs floor life exceeded 672 hours.

Recommended baking condition: 60±5°C for 20 hours.

Intensity Bin Select (X_2X_3)

Individual reel will contain parts from one half bin only

X_2	Min I_V Bin
X_3	
0	Full Distribution
2	2 half bins starting from X_21
3	3 half bins starting from X_21
4	4 half bins starting from X_21
5	5 half bins starting from X_21
6	2 half bins starting from X_22
7	3 half bins starting from X_22
8	4 half bins starting from X_22
9	5 half bins starting from X_22

Intensity Bin Limits

Bin ID	Min. (mcd)	Max. (mcd)
N1	28.50	35.50
N2	35.50	45.00
P1	45.00	56.00
P2	56.00	71.50
Q1	71.50	90.00
Q2	90.00	112.50
R1	112.50	140.00
R2	140.00	180.00
S1	180.00	224.00
S2	224.00	285.00
T1	285.00	355.00
T2	355.00	450.00
U1	450.00	560.00
U2	560.00	715.00
V1	715.00	900.00
V2	900.00	1125.00
W1	1125.00	1400.00
W2	1400.00	1800.00

Tolerance of each bin limit = ± 12%

Color Bin Select (X_4)

Individual reel will contain parts from one full bin only.

X_7	
0	Full Distribution
A	1 and 2 only
B	2 and 3 only
C	3 and 4 only
D	4 and 5 only
E	5 and 6 only
F	6 and 7 only
G	1, 2 and 3 only
H	2, 3 and 4 only
J	3, 4 and 5 only
K	4, 5 and 6 only
L	5, 6 and 7 only
M	1, 2, 3 and 4 only
N	2, 3, 4 and 5 only
P	3, 4, 5 and 6 only
Q	4, 5, 6 and 7 only
R	1, 2, 3, 4 and 5 only
S	2, 3, 4, 5 and 6 only
T	3, 4, 5, 6, and 7 only
U	1, 2, 3, 4, 5 and 6 only
V	2, 3, 4, 5, 6 and 7 only
Z	Special Color Bin

Color Bin Limits

Bin ID	Limits (Chromaticity Coordinates)				
1	x	0.296	0.291	0.310	0.313
	y	0.259	0.268	0.297	0.284
2	x	0.291	0.285	0.307	0.310
	y	0.268	0.279	0.312	0.297
3	x	0.313	0.310	0.330	0.330
	y	0.284	0.297	0.330	0.310
4	x	0.310	0.307	0.330	0.330
	y	0.297	0.312	0.347	0.330
5	x	0.330	0.330	0.338	0.352
	y	0.310	0.330	0.342	0.344
6	x	0.330	0.330	0.347	0.345
	y	0.330	0.347	0.371	0.352
7	x	0.352	0.338	0.364	0.360
	y	0.344	0.342	0.380	0.357
8	x	0.345	0.347	0.367	0.364
	y	0.352	0.371	0.401	0.380

Tolerance of each bin limit = ±0.02.

Packaging Option (X_5)

Option	Test Current	Package Type	Reel Size
3	30 mA	Top Mount	7 inch

V_F Bin Limits

Bin ID	Min.	Max.
S3	3.20	3.80
S4	3.80	4.35

Tolerance of each bin limit = ±0.1V

Color Coordinates Chart

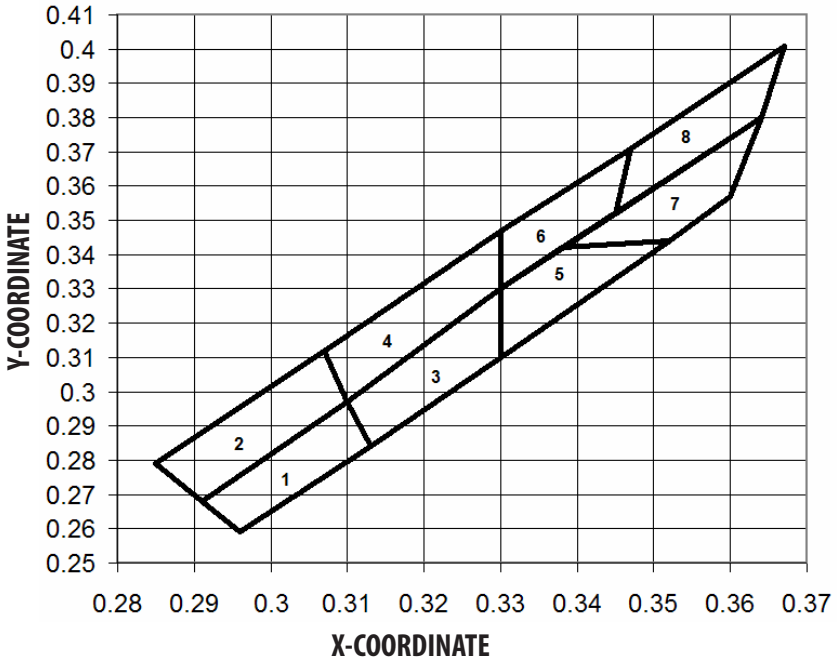

Handling Precaution

The encapsulation material of the product is made of silicone for better reliability of the product. As silicone is a soft material, please do not press on the silicone or poke a sharp object onto the silicone. These might damage the product and cause premature failure. During assembly of handling, the unit should b e held on the body only. Please refer to Avago Application Note AN 5288 for detail information.

For product information and a complete list of distributors, please go to our web site: **www.avagotech.com**

Avago, Avago Technologies, and the A logo are trademarks of Avago Technologies, Limited in the United States and other countries.
Data subject to change. Copyright © 2006 Avago Technologies Limited. All rights reserved. Obsoletes AV01-0443EN
AV02-0443EN - July 3, 2007