查询AU6980供应商 捷多邦，专业PCB打样工厂，24小时加急出货

ALCOR MICRO

AU6980

USB2.0 Universal Flash Disk Controller

Technical Reference Manual

找PDF 维库一下 pdf.dzsc.com

AU6980

USB2.0 Universal Flash Disk Controller

Copyright

Copyright © 1997 - 2007. Alcor Micro, Corp. All Rights Reserved. No part of this data sheet may be reproduced, transmitted, transcribed, stored in a retrieval system or translated into any language or computer language, in any form or by any means, electronic, mechanical, magnetic, optical, chemical, manual or otherwise, without prior written permission from Alcor Micro, Corp.

Trademark Acknowledgements

The company and product names mentioned in this document may be the trademarks or registered trademarks of their manufacturers.

Disclaimer

Alcor Micro, Corp. reserves the right to change this product without prior notice. Alcor Micro, Corp. makes no warranty for the use of its products and bears no responsibility for any error that appear in this document. Specifications are subject to change without prior notice.

Revision History

Date	Revision	Description
Mar 2006	1.00W	Official Release.
Aug 2006	1.01W	Modify “5.0 Electrical Characteristics” information
Oct 2006	1.02W	Add GHL bonding information
June 2007	1.03W	Modify 3.1 Pin Descriptions-P7(External 330 Resister to Ground) Modify 3.2 Pin Descriptions-P5(External 330 Resister to Ground)

Contact Information:

Web site: http://www.alcormicro.com/

Taiwan
Alcor Micro, Corp.
4F, No 200 Kang Chien Rd., Nei Hu,
Taipei, Taiwan, R.O.C.
Phone: 886-2-8751-1984
Fax: 886-2-2659-7723

China ShenZhen Office
Rm.2407-08, Industrial Bank Building
No.4013, Shennan Road,
ShenZhen,China. 518026
Phone: (0755) 8366-9039
Fax: (0755) 8366-9101

Santa Clara Office
2901 Tasman Drive, Suite 206
Santa Clara, CA 95054
USA
Phone: (408) 845-9300
Fax: (408) 845-9086

Los Angeles Office
9070 Rancho Park Court
Rancho Cucamonga, CA 91730
USA
Phone: (909) 483-9900
Fax: (909) 944-0464

<Memo>

Table of Contents

1. Introduction 1
1.1 Description 1
1.2 Features 1
2. Application Block Diagram 2
3. Pin Assignment 3
4. System Architecture and Reference Design 9
4.1 AU6980 Block Diagram 9
5. Electrical Characteristics 10
5.1 Absolute Maximum Ratings 10
5.2 Recommended Operating Conditions 10
5.3 General DC Characteristics 10
5.4 DC Electrical Characteristics of 3.3V I/O Cells 11
5.5 USB Transceiver Characteristics 11
6. Mechanical Information 15
7. Abbreviations 16

List of Figures

Figure 2.1 Block Diagram.....2
Figure 3.1 AU6980-GDL Pin Assignment Diagram 3
Figure 3.2 AU6980-GHL Pin Assignment Diagram 6
Figure 4.1 AU6980 Block Diagram 9
Figure 6.1 Mechanical Information Diagram 15

List of Tables

Table 3.1 AU6980-GDL Pin Descriptions 4
Table 3.2 AU6980-GHL Pin Descriptions 7
Table 5.1 Absolute Maximum Ratings 10
Table 5.2 Recommended Operating Conditions 10
Table 5.3 General DC Characteristics.....10
Table 5.4 DC Electrical Characteristics of 3.3V I/O Cells 11
Table 5.5 Electrical characteristics 11
Table 5.6 Static characteristic：Digital pin 12
Table 5.7 Static characteristic：Analog I/O pins（DP/DM）.....12
Table 5.8 Dynamic characteristic：Analog I/O pins（DP/DM）.....13

1. Introduction

1.1 Description

The AU6980 USB 2.0 Flash Disk Controller is one of the best solutions for all kinds of SLC (Single- Level Cell) and MLC (Multi-Level Cell) NAND and AG-AND with multiple dies data flashes. The ability to support new flash in the market is powerful and in time. Its high-speed read and write access performance enable users to transfer and backup data effectively. Besides, AU6980 is certified by USB-IF (USB Implementers Forum), WHQL (Window Hardware Quality Labs) and EMI tests to guarantee the quality and reliability for end-users.
The multi-function single chip AU6980 provides dual channel access and ISP (In-System Programming) technologies, which are the most important features to allow manufacturers building high performance UFD easily. In addition to being a removable storage device, AU6980 can also be configured as a bootable disk for system recovery..
To enhance the usefulness and manageability of UFD further, Alcor Micro develops a smart application program iStar (Partition/Password Operation Tool) as a handy utility in managing partition, password and security. Having iStar as the companion of UFD, not only the data in a UFD could be protected from unauthorized access, but also the PC computer could be completely locked out from people who do not have the specific UFD. This feature increases the value of a UFD and leads users to the new security generation at the same time.

1.2 Features

- Supports dual channel mode for high-speed transfer.
- Supports firmware upgrade mechanism (ISP, In-System Programming)
- Integrates hardware DMA engine to tune up the operation performance
- Integrates multi-bit ECC correction mechanism
- Complies with the standards defined in USB v2.0, USB Device Class Definition for Mass Storage and Bulk-Transport v1.0
- Works with default driver under the environments of Windows ME, Windows 2000, Windows XP, Mac 9.2, Mac OS X. Using Alcor Micro's vendor driver for the environment under Windows 98SE
- Concurrent bus operation using multiple FIFO for better performance
- Integrates into flash memory power control switch
- Supports bad block management
- Supports dynamic serial number modification via mass production software
- Supports software write protection
- Companion application program with UFD – iStar available for users
  - To have UFD partition management function
  - To do password protection for the security in data access
  - To guard data files with software write protection function
  - To lock up PC by UFD as the key
- Available in 48-pin LQFP package, 64-pin LQFP package to support 4CE pin flash

2. Application Block Diagram

The following figure shows the application diagram of a typical flash disk product with AU6980. By connecting the flash disk to a desktop or notebook PC through USB bus, AU6980 is then turned into a bus-powered, high speed USB disk, which can be used as a bridge for data transfer between Desktop PC and Notebook PC

Figure 2.1 Block Diagram

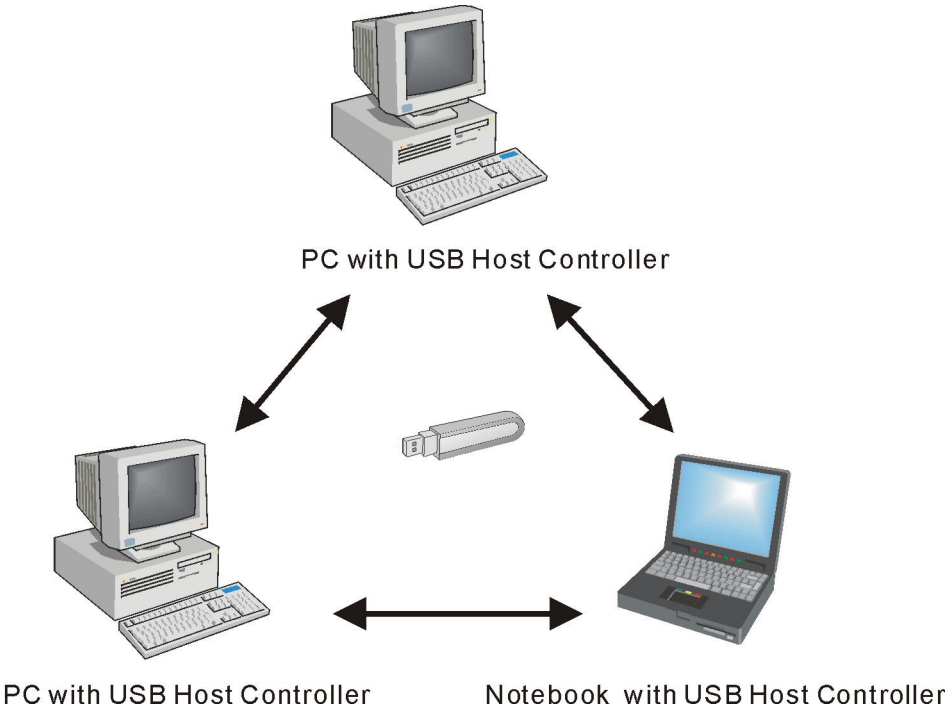

3. Pin Assignment

Depending on the application, the AU6980 is available in two different packages. Below figure shows signal name for each pin and the table in the page after describes each pin in detail.

Figure 3.1 AU6980-GDL Pin Assignment Diagram

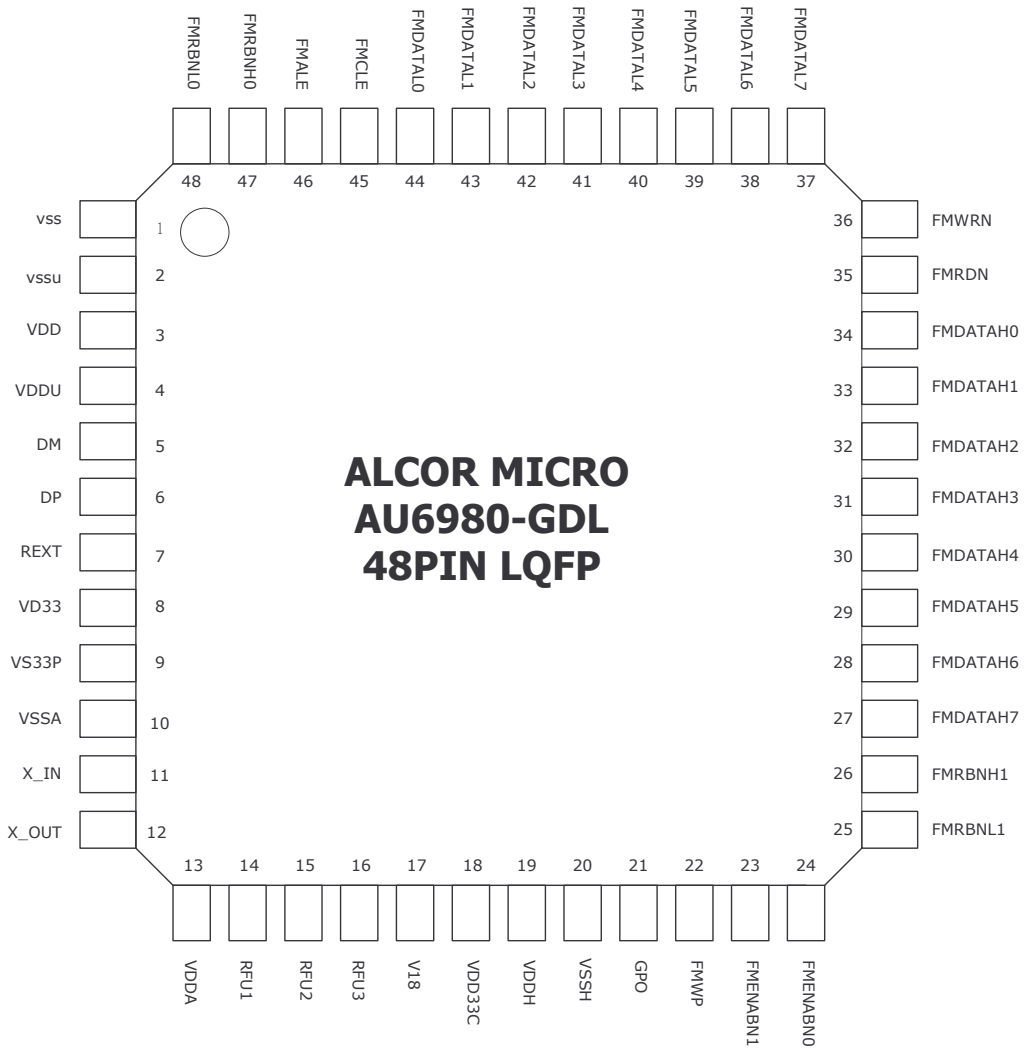

Table 3.1 AU6980-GDL Pin Descriptions

Pin #	Pin Name	I/O	Description
1	VSS	GND	Ground
2	VSSU	GND	Ground
3	VDD	I	1.8V Power Source for Core
4	VDDU	I	1.8V Power Source for UTMI
5	DM	I/O	USB DM
6	DP	I/O	USB DP
7	REXT	I	External 330 Resister to Ground
8	VD33	I	3.3V Power Source for UTMI
9	VS33P	GND	Ground
10	VSSA	GND	Ground
11	X_IN	I	12 MHz crystal input.
12	X_OUT	O	12 MHz crystal output.
13	VDDA	I	1.8V Power Source for PLL
14	RFU1		Reserved
15	RFU2		Reserved
16	RFU3		Reserved
17	V18	O	1.8V Power Out
18	VDD33C	O	3.3V Power Out for Flash Memory
19	VDDH	I	3.3V Power Source for IO pad
20	VSSH	GND	Ground
21	OPLED	O	General Purpose OutPut
22	FMWP	I	Flash Memory Write Protect; High Active
23	FMENABN1	I/O	Flash Memory #1 Enable; Low Active
24	FMENABN0	I/O	Flash Memory #0 Enable; Low Active
25	FMRBNL1	I	Flash Memory(L1) Ready and Busy Signal (1=Ready ; 0=Busy)
26	FMRBNH1	I	Flash Memory(H1) Ready and Busy Signal (1=Ready ; 0=Busy)
27	FMDATAH7	I/O	Flash Memory DataH[7]
28	FMDATAH6	I/O	Flash Memory DataH[6]
29	FMDATAH5	I/O	Flash Memory DataH[5]

Pin #	Pin Name	I/O	Description
30	FMDATAH4	I/O	Flash Memory DataH[4]
31	FMDATAH3	I/O	Flash Memory DataH[3]
32	FMDATAH2	I/O	Flash Memory DataH[2]
33	FMDATAH1	I/O	Flash Memory DataH[1]
34	FMDATAH0	I/O	Flash Memory DataH[0]
35	FMRDN	I/O	Flash Memory Read Enable; Low Active
36	FMWRN	I/O	Flash Memory Write Enable; Low Active
37	FMDATAL7	I/O	Flash Memory DataL[7]
38	FMDATAL6	I/O	Flash Memory DataL[6]
39	FMDATAL5	I/O	Flash Memory DataL[5]
40	FMDATAL4	I/O	Flash Memory DataL[4]
41	FMDATAL3	I/O	Flash Memory DataL[3]
42	FMDATAL2	I/O	Flash Memory DataL[2]
43	FMDATAL1	I/O	Flash Memory DataL[1]
44	FMDATAL0	I/O	Flash Memory DataL[0]
45	FMCLE	O	Flash Memory Command Latch Enable ;High Active
46	FMALE	O	Flash Memory Address Latch Enable; High Active;
47	FMRBNH0	I	Flash Memory(H0) Ready and Busy Signal (1=Ready ; 0=Busy)
48	FMRBNL0	I	Flash Memory(L0) Ready and Busy Signal (1=Ready ; 0=Busy)

The following figure shows signal name of each pin in 48-pin package and the table in the page after describes each pin in detail.

Figure 3.2 AU6980-GHL Pin Assignment Diagram

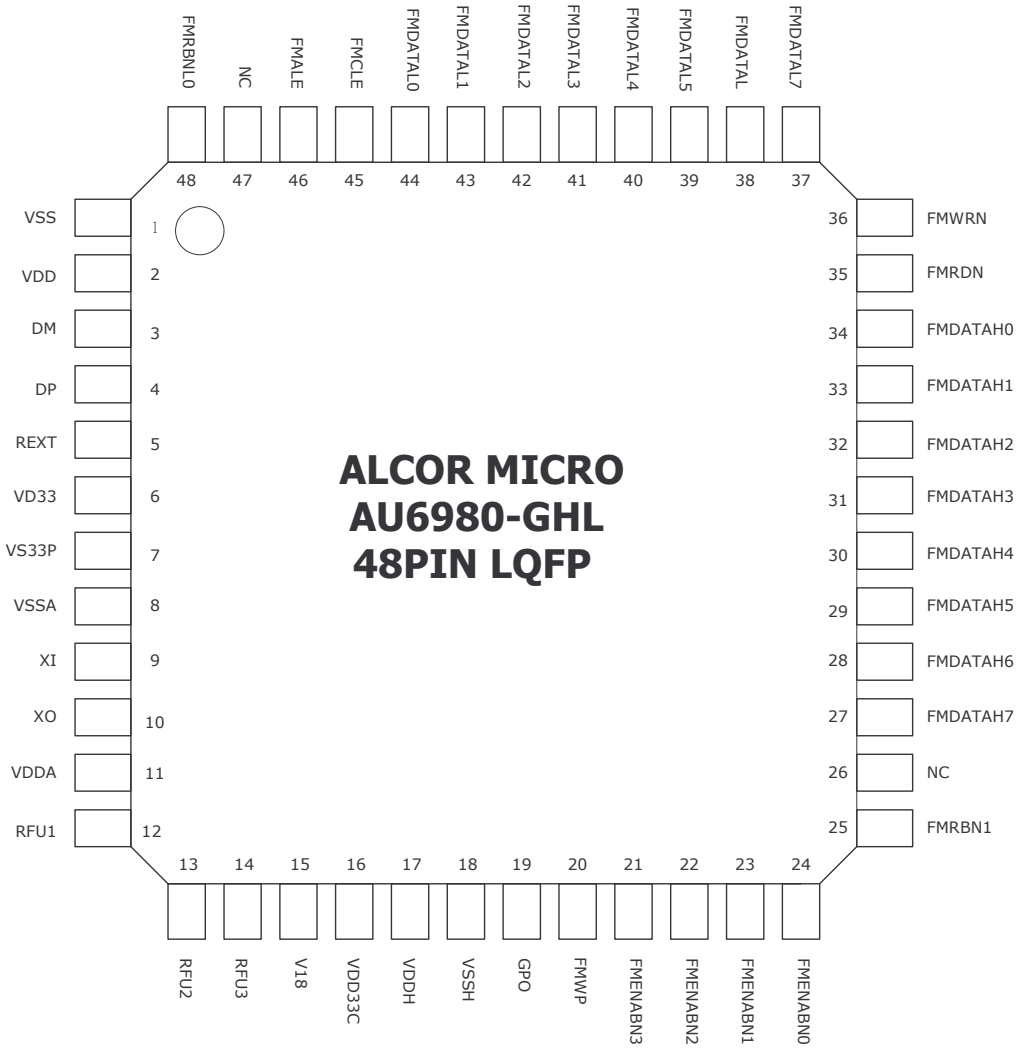

Table 3.2 AU6980-GHL Pin Descriptions

Pin #	Pin Name	I/O	Description
1	VSS	GND	Ground
2	VDD	I	1.8V Power Source for Core
3	DM	I/O	USB DM
4	DP	I/O	USB DP
5	REXT	I	External 330 Resister to Ground
6	VD33	I	3.3V Power Source for UTMI
7	VS33P	GND	Ground
8	VSSA	GND	Ground
9	XI	I	12 MHz crystal input.
10	XO	O	12 MHz crystal output.
11	VDDA	I	1.8V Power Source for PLL
12	RFU1		Reserved
13	RFU2		Reserved
14	RFU3		Reserved
15	V18	O	1.8V Power Out for Core
16	VDD33C	O	3.3V Power Out for Flash Memory
17	VDDH	I	3.3V Power Source for IO pad
18	VSSH	GND	Ground
19	GPO	O	General Purpose OutPut
20	FMWP	I	Flash Memory Write Protect; High Active
21	FMENABN3	I/O	Flash Memory #3 Enable; Low Active
22	FMENABN2	I/O	Flash Memory #2 Enable; Low Active
23	FMENABN1	I/O	Flash Memory #1 Enable; Low Active
24	FMENABN0	I/O	Flash Memory #0 Enable; Low Active
25	FMRBN1	I	Flash Memory(L1) Ready and Busy Signal (1=Ready ; 0=Busy)
26	NC		
27	FMDATAH7	I/O	Flash Memory DataH[7]
28	FMDATAH6	I/O	Flash Memory DataH[6]
29	FMDATAH5	I/O	Flash Memory DataH[5]

Pin #	Pin Name	I/O	Description
30	FMDATAH4	I/O	Flash Memory DataH[4]
31	FMDATAH3	I/O	Flash Memory DataH[3]
32	FMDATAH2	I/O	Flash Memory DataH[2]
33	FMDATAH1	I/O	Flash Memory DataH[1]
34	FMDATAH0	I/O	Flash Memory DataH[0]
35	FMRDN	I/O	Flash Memory Read Enable; Low Active
36	FMWRN	I/O	Flash Memory Write Enable; Low Active
37	FMDATAL7	I/O	Flash Memory DataL[7]
38	FMDATAL6	I/O	Flash Memory DataL[6]
39	FMDATAL5	I/O	Flash Memory DataL[5]
40	FMDATAL4	I/O	Flash Memory DataL[4]
41	FMDATAL3	I/O	Flash Memory DataL[3]
42	FMDATAL2	I/O	Flash Memory DataL[2]
43	FMDATAL1	I/O	Flash Memory DataL[1]
44	FMDATAL0	I/O	Flash Memory DataL[0]
45	FMCLE	O	Flash Memory Command Latch Enable ;High Active
46	FMALE	O	Flash Memory Address Latch Enable; High Active;
47	NC		
48	FMRBN0	I	Flash Memory(L0) Ready and Busy Signal (1=Ready ; 0=Busy)

4. System Architecture and Reference Design

4.1 AU6980 Block Diagram

Figure 4.1 AU6980 Block Diagram

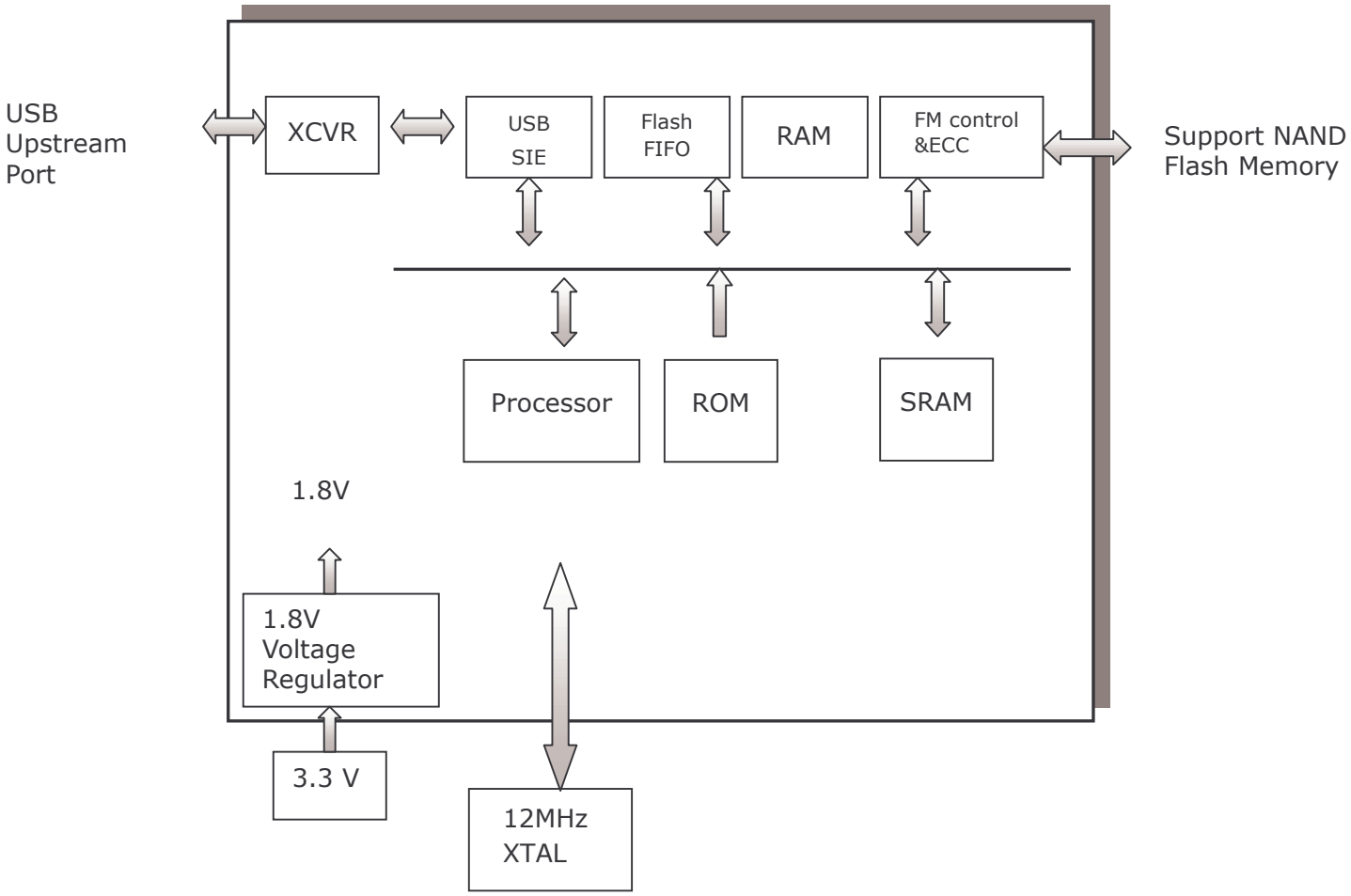

5. Electrical Characteristics

5.1 Absolute Maximum Ratings

Table 5.1 Absolute Maximum Ratings

Symbol	Parameter	Rating	Units
V_{DDH}	Power Supply	-0.3 to V_{DDH} +0.3	V
V_{IN}	Input Signal Voltage	-0.3 to 3.6	V
V_{OUT}	Output Signal Voltage	-0.3 to V_{DDH} +0.3	V
T_{STG}	Storage Temperature	-40 to 150	^{O}C

5.2 Recommended Operating Conditions

Table 5.2 Recommended Operating Conditions

Symbol	Parameter	Min.	Tpy.	Max.	Units
V_{DDH}	Power Supply	3.0	3.3	3.6	V
V_{DD}	Digital Supply	1.62	1.8	1.98	V
V_{IN}	Input Signal Voltage	0	3.3	3.6	V
T_{OPR}	Operating Temperature	0		70	^{O}C

5.3 General DC Characteristics

Table 5.3 General DC Characteristics

Symbol	Parameter	Conditions	Min.	Tpy.	Max.	Units
I_{IN}	Input current	No pull-up or pull-down	-10	±1	10	μA
I_{OZ}	Tri-state leakage current		-10	±1	10	μA
C_{IN}	Input capacitance	Pad Limit		2.8		ρF
C_{OUT}	Output capacitance	Pad Limit		2.8		ρF
C_{BID}	Bi-directional buffer capacitance	Pad Limit		2.8		ρF

5.4 DC Electrical Characteristics of 3.3V I/O Cells

Table 5.4 DC Electrical Characteristics of 3.3V I/O Cells

Symbol	Parameter	Conditions	Limits			Unit
			Min.	Typ.	Max.	
V_{DDH}	Power supply	3.3V I/O	3.0	3.3	3.6	V
V_{il}	Input low voltage	LVTTL			0.8	V
V_{ih}	Input high voltage		2.0			V
V_{ol}	Output low voltage	$\lvert I_{ol} \rvert$ =2~16mA			0.4	V
V_{oh}	Output high voltage	$\lvert I_{oh} \rvert$ =2~16mA	2.4			V
R_{pu}	Input pull-up resistance	PU=high, PD=low	55	75	110	KΩ
R_{pd}	Input pull-down resistance	PU=low, PD=high	40	75	150	KΩ
I_{in}	Input leakage current	V_{in}= V_{DDH} or 0	-10	±1	10	μA
I_{oz}	Tri-state output leakage current		-10	±1	10	μA

5.5 USB Transceiver Characteristics

Table 5.5 Electrical characteristics

Symbol	Parameter	Conditions	Min.	Typ.	Max.	Unit
VD33	Analog supply Voltage		3.0	3.3	3.6	V
VDDU VDDA	Digital supply Voltage		1.62	1.8	1.98	V
I_{CC}	Operating supply current	High speed operating at 480 MHz			55	mA
$I_{CC\ (susp)}$	Suspend supply current	In suspend mode, current with 1.5kΩ pull-up resistor on pin RPU disconnected			120	μA

Table 5.6 Static characteristic：Digital pin

Symbol	Parameter	Conditions	Min.	Typ.	Max.	Unit
Input levels						
V_{IL}	Low-level input voltage				0.8	V
V_{IH}	High-level input voltage		2.0			V
Output levels						
V_{OL}	Low-level output voltage				0.2	V
V_{OH}	High-level output voltage		VDDH-0.2			V

VD33=3.0V~3.6V；VDDU,VDDA=1.62V~1.98V；Temp=0℃~70℃

Table 5.7 Static characteristic：Analog I/O pins（DP/DM）

Symbol	Parameter	Conditions	Min.	Typ.	Max.	Unit
USB2.0 Transceiver（HS）						
Input Levels（differential receiver）						
V_{HSDIFF}	High speed differential input sensitivity	$\lvert V_{I(DP)}-V_{I(DM)} \rvert$ measured at the connection as application circuit	300			mV
V_{HSCM}	High speed data signaling common mode voltage range		-50		500	mV
V_{HSSQ}	High speed squelch detection threshold	Squelch detected			100	mV
		No squelch detected	150			mV
V_{HSDSC}	High speed disconnection detection threshold	Disconnection detected	625			mV
		Disconnection not detected			525	mV
Output Levels						
V_{HSOI}	High speed idle level output voltage(differential)		-10		10	mV
V_{HSOL}	High speed low level output voltage(differential)		-10		10	mV
V_{HSOH}	High speed high level output voltage(differential)		-360		400	mV
V_{CHIRPJ}	Chirp-J output voltage（differential）		700		1100	mV
V_{CHIRPK}	Chirp-K output voltage（differential）		-900		-500	mV
Resistance						
R_{DRV}	Driver output impedance	Equivalent resistance used as internal chip only	3	6	9	Ω

		Overall resistance including external resistor	40.5	45	49.5	
Termination						
V_{TERM}	Termination voltage for pull-up resistor on pin RPU		3.0		3.6	V
USB1.1 Transceiver（FS/LS）						
Input Levels（differential receiver）						
V_{DI}	Differential input sensitivity	$\lvert V_{I(DP)}-V_{I(DM)} \rvert$	0.2			V
V_{CM}	Differential common mode voltage		0.8		2.5	V
Input Levels（single-ended receivers）						
V_{SE}	Single ended receiver threshold		0.8		2.0	V
Output levels						
V_{OL}	Low-level output voltage		0		0.3	V
V_{OH}	High-level output voltage		2.8		3.6	V

VD33=3.0V~3.6V；VDDU,VDDA=1.62V~1.98V；Temp=0℃~70℃

Table 5.8 Dynamic characteristic：Analog I/O pins（DP/DM）

Symbol	Parameter	Conditions	Min.	Typ.	Max.	Unit
Driver Characteristics						
High-Speed Mode						
t_{HSR}	High-speed differential rise time		500			ps
t_{HSF}	High-speed differential fall time		500			ps
Full-Speed Mode						
t_{FR}	Rise time	CL=50pF；10 to 90% of $\lvert V_{OH}-V_{OL} \rvert$；	4		20	ns
t_{FF}	Fall time	CL=50pF；90 to 10% of $\lvert V_{OH}-V_{OL} \rvert$；	4		20	ns
t_{FRMA}	Differential rise/fall time matching（t_{FR} / t_{FF}）	Excluding the first transition from idle mode	90		110	%
V_{CRS}	Output signal crossover voltage	Excluding the first transition from idle mode	1.3		2.0	V
Low-Speed Mode						
t_{LR}	Rise time	CL=200pF-600pF；10 to 90% of $\lvert V_{OH}-V_{OL} \rvert$；	75		300	ns

t_{LF}	Fall time	CL=200pF-600pF；90 to 10% of ｜V_{OH}-V_{OL}｜；	75		300	ns
t_{LRMA}	Differential rise/fall time matching（t_{LR} / t_{LF}）	Excluding the first transition from idle mode	80		125	%
V_{CRS}	Output signal crossover voltage	Excluding the first transition from idle mode	1.3		2.0	V
V_{OH}	High-level output voltage		2.8		3.6	V

6. Mechanical Information

Figure 6.1 Mechanical Information Diagram

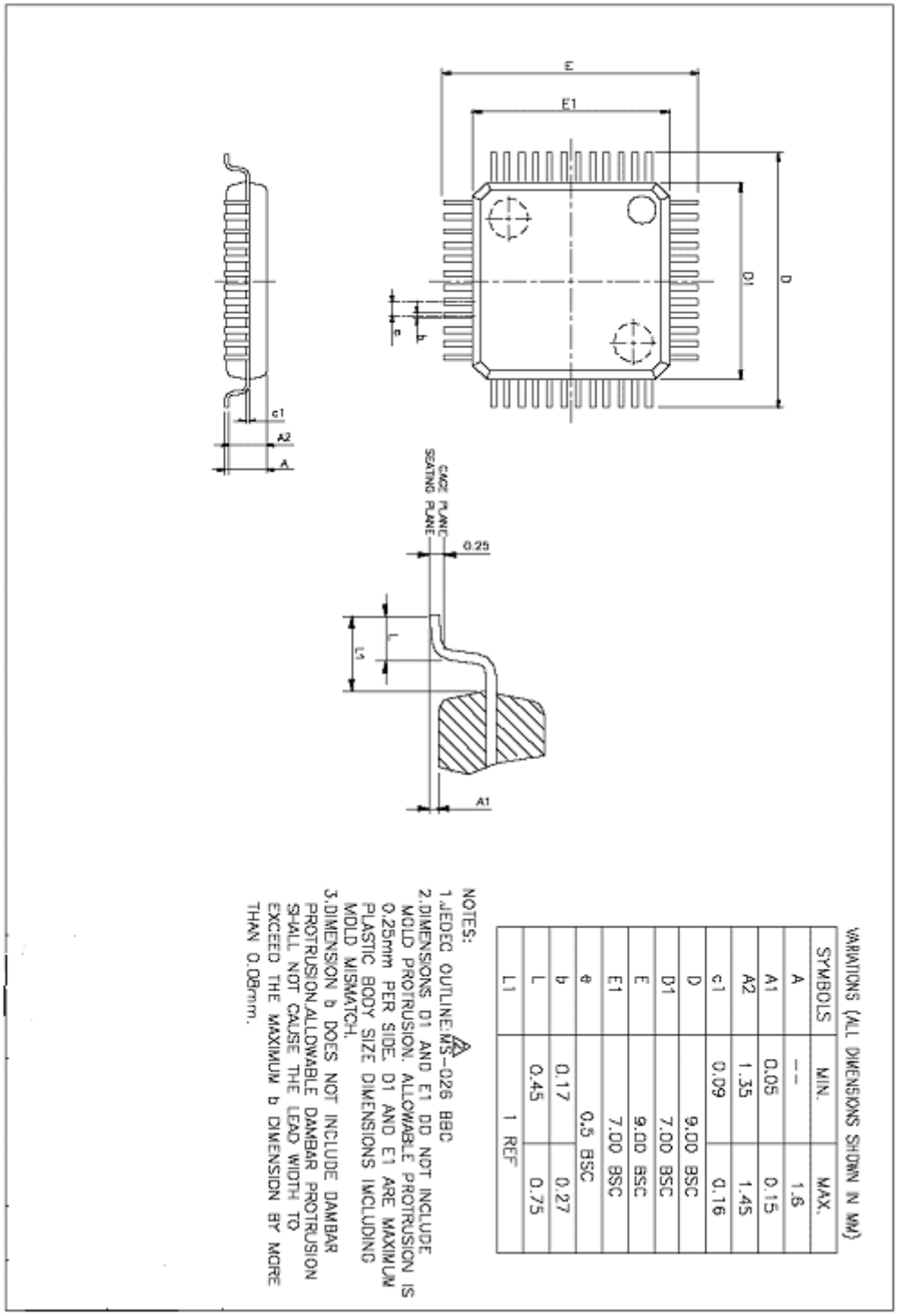

VARIATIONS (ALL DIMENSIONS SHOWN IN MM)

SYMBOLS	MIN.	MAX.
A	--	1.6
A1	0.05	0.15
A2	1.35	1.45
c1	0.09	0.16
D	9.00 BSC	
D1	7.00 BSC	
E	9.00 BSC	
E1	7.00 BSC	
e	0.5 BSC	
b	0.17	0.27
L	0.45	0.75
L1	1 REF	

NOTES:
1.JEDEC OUTLINE:MS-026 BBC
2.DIMENSIONS D1 AND E1 DO NOT INCLUDE MOLD PROTRUSION. ALLOWABLE PROTRUSION IS 0.25mm PER SIDE. D1 AND E1 ARE MAXIMUM PLASTIC BODY SIZE DIMENSIONS INCLUDING MOLD MISMATCH.
3.DIMENSION b DOES NOT INCLUDE DAMBAR PROTRUSION.ALLOWABLE DAMBAR PROTRUSION SHALL NOT CAUSE THE LEAD WIDTH TO EXCEED THE MAXIMUM b DIMENSION BY MORE THAN 0.08mm.

7. Abbreviations

In this chapter some of the terms and abbreviations used throughout the technical reference manual are listed as follows.

DC Electrical	Direct Current Electrical
PLL	Phase Lock Loop, which is a closed-loop frequency control system.
ECC	Error Checking and Correcting
XTAL	Crystal
UFD	USB Flash Disk
iStar	Partition/Password Operation Tool - the smart application program developed by Alcor Micro as a companion handy tool for managing the UFD.

About Alcor Micro, Corp.

Alcor Micro, Corp. designs, develops and markets highly integrated and advanced peripheral semiconductor, and software driver solutions for the personal computer and consumer electronics markets worldwide. We specialize in USB solutions and focus on emerging technology such as USB and IEEE 1394. The company offers a range of semiconductors including controllers for USB hub, integrated keyboard/USB hub and USB Flash memory card reader…etc. Alcor Micro, Corp. is based in Taipei, Taiwan, with sales offices in Taipei, Japan, Korea and California. Alcor Micro is distinguished by its ability to provide innovative solutions for spec-driven products. Innovations like single chip solutions for traditional multiple chip products and on-board voltage regulators enable the company to provide cost-efficiency solutions for the computer peripheral device OEM customers worldwide.