查询178M05供应商 捷多邦，专业PCB打样工厂，24小时加急出货

STRUCTURE Silicon Monolithic Integrated Circuit

TYPE Three-Terminal Regulator

PRODUCT SERIES **BA78MXXFP**

FEATURE Output current up to 0.5A

○ABSOLUTE MAXIMUM RATING (Ta=25℃)

Parameter	Symbol	Limit	Unit
Input Voltage	Vin	35	V
Power Dissipation 1	Pd1	1*1	W
Power Dissipation 2	Pd2	10*2	W
Output Current	Iout	0.5*3	A
Operating Temperature Range	Topr	-40～+85	℃
Operating Junction Temperature Range	Tj	-40～+150	℃
Storage Temperature Range	Tstg	-55～+150	℃

*1 Derating in done 8mW/℃ for temperatures above Ta=25℃.
*2 Derating in done 80mW/℃ for temperatures above Ta=25℃, Mounted on infinity Alminium heat sink.
*3 Pd, ASO should not be exceeded.

○RECOMMENDED OPERATING CONDITIONS (Ta=-40～+85℃)

Parameter	Symbol	Type	Min	Max	Unit
Input Voltage	Vin	BA78M05FP	7.5	25	V
		BA78M06FP	8.5	21	
		BA78M07FP	9.5	22	
		BA78M08FP	10.5	23	
		BA78M09FP	11.5	24	
		BA78M10FP	12.5	25	
		BA78M12FP	15	27	
		BA78M15FP	17.5	30	
		BA78M18FP	21	33	
		BA78M20FP	23	33	
		BA78M24FP	27	33	
Output Current	Io	Common	—	0.5*3	A

The product described in this specification is a strategic product (and/or Service) subject to COCOM regulations.
It should not be exported without Authorization from the appropriate government.
This product is not designed for protection against radioactive rays.

Status of this document
The Japanese version of this document is the formal specification. A customer may use this translation version only for a reference to help reading the formal version. If there are any differences in translation version of this document, formal version takes priority.

找PDF 维库一下 pdf.dzsc.com

○ ELECTRICAL CHARACTERISTICS

(Unless otherwise specified, Ta=25℃,Vin=10V(05),11V(06),13V(07),14V(08),15V(09),16V(10),19V(12),23V(15),27V(18),29V(20),33V(24), Io=350mA)

Parameter	Symbol	Type	Limit			Unit	Condition
			Min.	Typ.	Max.		
Output Voltage1	Vo1	05	4.8	5.0	5.2	V	I o=350mA
		06	5.75	6.0	6.25		
		07	6.7	7.0	7.3		
		08	7.7	8.0	8.3		
		09	8.6	9.0	9.4		
		10	9.6	10.0	10.4		
		12	11.5	12.0	12.5		
		15	14.4	15.0	15.6		
		18	17.3	18.0	18.7		
		20	19.2	20.0	20.8		
		24	23.0	24.0	25.0		
Output Voltage2	Vo2	05	4.75	—	5.25	V	Vin=7.5～20V, Io=5mA～350mA
		06	5.7	—	6.3		Vin=8.5～21V, Io=5mA～350mA
		07	6.65	—	7.35		Vin=9.5～22V, Io=5mA～350mA
		08	7.6	—	8.4		Vin=10.5～23V, Io=5mA～350mA
		09	8.55	—	9.45		Vin=11.5～24V, Io=5mA～350mA
		10	9.5	—	10.5		Vin=12.5～25V, Io=5mA～350mA
		12	11.4	—	12.6		Vin=15～27V, Io=5mA～350mA
		15	14.25	—	15.75		Vin=17.5～30V, Io=5mA～350mA
		18	17.1	—	18.9		Vin=21～33V, Io=5mA～350mA
		20	19.0	—	21.0		Vin=23～33V, Io=5mA～350mA
		24	22.8	—	25.2		Vin=27～33V, Io=5mA～350mA
Line Regulation1	Reg.I1	05	—	3	100	mV	Vin=7～25V, Io=200mA
		06	—	3	100		Vin=8～25V, Io=200mA
		07	—	4	100		Vin=9～25V, Io=200mA
		08	—	4	100		Vin=10.5～25V, Io=200mA
		09	—	4	100		Vin=11.5～26V, Io=200mA
		10	—	5	100		Vin=12.5～28V, Io=200mA
		12	—	5	100		Vin=14.5～30V, Io=200mA
		15	—	6	100		Vin=17.5～30V, Io=200mA
		18	—	7	100		Vin=21～33V, Io=200mA
		20	—	8	100		Vin=23～33V, Io=200mA
		24	—	10	100		Vin=27～33V, Io=200mA
Line Regulation2	Reg.I2	05	—	1	50	mV	Vin=8～12V, Io=200mA
		06	—	1	50		Vin=9～25V, Io=200mA
		07	—	1	50		Vin=10～25V, Io=200mA
		08	—	1	50		Vin=11～25V, Io=200mA
		09	—	2	50		Vin=12～25V, Io=200mA
		10	—	2	50		Vin=14～26V, Io=200mA
		12	—	3	50		Vin=16～30V, Io=200mA
		15	—	3	50		Vin=20～30V, Io=200mA
		18	—	3	50		Vin=24～33V, Io=200mA
		20	—	4	50		Vin=24～33V, Io=200mA
		24	—	5	50		Vin=28～33V, Io=200mA
Ripple Rejection	R.R.	05	62	78	—	dB	ein=1Vrms, f=120Hz, Io=100mA
		06	60	74	—		
		07	57	71	—		
		08	56	69	—		
		09	56	67	—		
		10	56	66	—		
		12	55	63	—		
		15	54	60	—		
		18	53	58	—		
		20	53	58	—		
		24	50	55	—		
Temperature Coefficient of Output Voltage	Tcvo	05	—	-1.0	—	mV/℃	Io=5mA, Tj=0～125℃
		06/07/08/09/10/12	—	-0.5	—		
		15/18	—	-0.6	—		
		20/24	—	-0.7	—		
Peak Output Current	Io-p	Common	—	875	—	mA	Tj=25℃
Dropout Voltage	Vd	Common	—	2.0	—	V	Io=500mA

Parameter	Symbol	Type	Limit Min.	Limit Typ.	Limit Max.	Unit	Condition
Load Regulation1	Reg.L1	05	—	20	100	mV	Io=5mA～500mA
		06	—	20	120		
		07	—	20	140		
		08	—	20	160		
		09	—	20	180		
		10	—	20	200		
		12	—	20	240		
		15	—	20	300		
		18	—	20	360		
		20	—	20	400		
		24	—	20	480		
Load Regulation2	Reg.L2	05	—	10	50	mV	Io=5mA～200mA
		06	—	10	60		
		07	—	10	70		
		08	—	10	80		
		09	—	10	90		
		10	—	10	100		
		12	—	10	120		
		15	—	10	150		
		18	—	10	180		
		20	—	10	200		
		24	—	10	240		
Output Noise Voltage	Vn	05	—	40	—	μV	f=10Hz～100kHz
		06	—	60	—		
		07	—	70	—		
		08	—	80	—		
		09	—	90	—		
		10	—	100	—		
		12	—	110	—		
		15	—	130	—		
		18	—	140	—		
		20	—	150	—		
		24	—	170	—		
Bias Current	Ib	Common	—	4.5	6.0	mA	Io=0mA
Bias Current Change 1	Ib1	Common	—	—	0.5	mA	Io=5mA～350mA
Bias Current Change 2	Ib2	05	—	—	0.8	mA	Vin:8～25V, Io=200mA
		06	—	—	0.8		Vin:9～25V, Io=200mA
		07	—	—	0.8		Vin:10～25V, Io=200mA
		08	—	—	0.8		Vin:10.5～25V, Io=200mA
		09	—	—	0.8		Vin:12～25V, Io=200mA
		10	—	—	0.8		Vin:13～25V, Io=200mA
		12	—	—	0.8		Vin:14.5～30V, Io=200mA
		15	—	—	0.8		Vin:17.5～30V, Io=200mA
		18	—	—	0.8		Vin:21～33V, Io=200mA
		20	—	—	0.8		Vin:23～33V, Io=200mA
		24	—	—	0.8		Vin:27～33V, Io=200mA
Short-Circuit Output Current	Ios	05/06/07/08	—	0.4	—	A	Vin=25V
		09/10/12/15/18/20/24	—	0.17	—		Vin=30V
Output Resistance	Ro	05	—	9	—	mΩ	f=1kHz
		06	—	10	—		
		07	—	11	—		
		08	—	12	—		
		09	—	13	—		
		10	—	14	—		
		12	—	16	—		
		15	—	19	—		
		18	—	22	—		
		20	—	25	—		
		24	—	37	—		

○ Output Voltage and Marking

Type	Marking	Output Voltage(V)
BA78M05FP	178M05	5
BA78M06FP	178M06	6
BA78M07FP	178M07	7
BA78M08FP	178M08	8

Type	Marking	Output Voltage(V)
BA78M09FP	178M09	9
BA78M10FP	178M10	10
BA78M12FP	178M12	12
BA78M15FP	178M15	15

Type	Marking	Output Voltage(V)
BA78M18FP	178M18	18
BA78M20FP	178M20	20
BA78M24FP	178M24	24

○ PHYSICAL DIMENTION

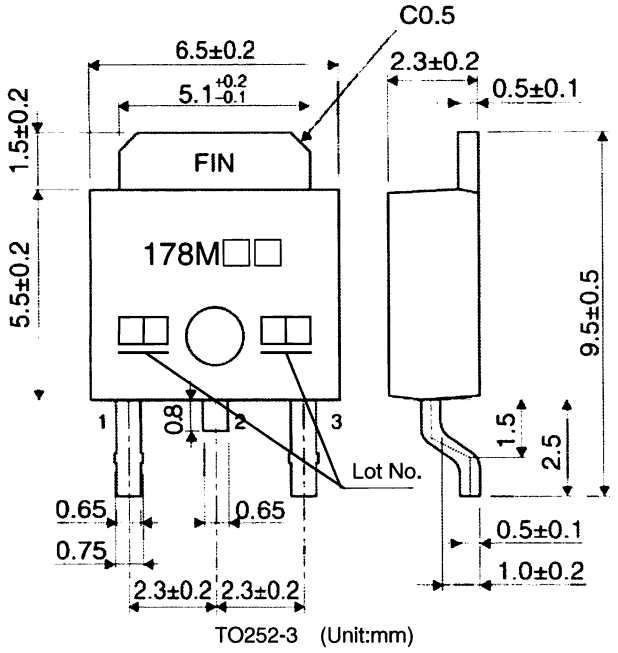

TO252-3 (Unit:mm)

○EQUIVALENT CIRCUIT

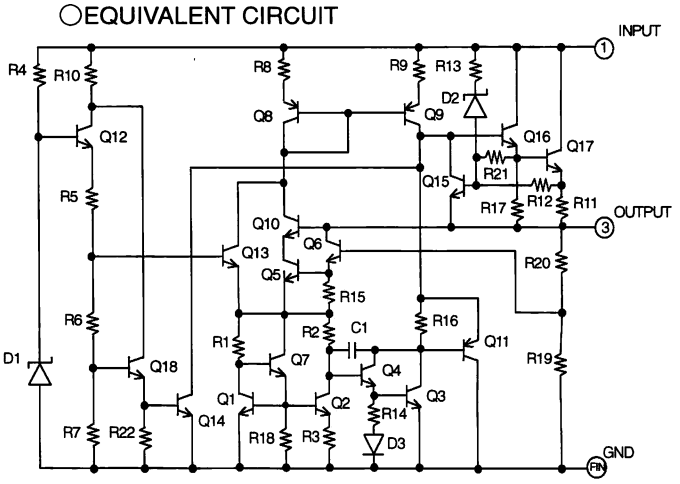

○Pin number, Pin name

Pin number	Pin name
1	INPUT
2	N.C.
3	OUTPUT
FIN	GND

○ NOTES FOR USE

(1) Absolute maximum range
We are careful enough for quality control about this IC. So, there is no problem under normal operation, excluding that it exceeds the absolute maximum ratings. However, Absolute Maximum Ratings are those values beyond which the life of a device may be destroyed we cannot be defined the failure mode, such as short mode or open mode. Therefore physical security countermeasure, like fuse, is to be given when a specific mode to be beyond absolute maximum ratings is considered.

(2) Ground voltage
Make setting of the potential of the GND terminal so that it will be maintained at the minimum in any operating state. Furthermore, check to be sure no terminals are at a potential lower than the GND voltage including an actual electric transient.

(3) Thermal design
When you do the kind of use which exceeds Pd, It may be happened to deteriorating IC original quality such as decrease of electric current ability with chip temperature rise. Do not exceed the power dissipation (Pd) of the package specification rating under actual operation, and please design enough temperature margins.

(4) Short circuit mode between terminals and wrong mounting
Do not mount the IC in the wrong direction and be careful about the reverse-connection of the power connector.
Moreover, this IC might be destroyed when the dust short the terminals between them or GND.

(5) Operation in the strong electromagnetic field
Malfunction may be happened when the device is used in the strong electromagnetic field.

(6) ASO
Do not exceed the maximum ASO and the absolute maximum ratings of the output transistor.

(7) Thermal shutdown circuit
The thermal shutdown circuit (TSD circuit) is built in this product. When IC chip temperature become higher, the thermal shutdown circuit operates and turns output off. The thermal shutdown circuit, which is aimed at isolating the LSI from thermal runaway as much as possible, is not aimed at the protection or guarantee of the LSI. Therefore, do not continuously use the LSI with this circuit operating or use the LSI assuming its operation.

(8) GND wiring pattern
Use separate ground lines for control signals and high current power driver outputs. Because these high current outputs that flows to the wire impedance changes the GND voltage for control signal. Therefore, each ground terminal of IC must be connected at the one point on the set circuit board. As for GND of external parts, it is similar to the above-mentioned.

(9) Internal circuits could be damaged if there are modes in which the electric potential of the application's input and GND are the opposite of the electric potential of the various outputs. Use of a diode or other such bypass is recommended.

(10) We recommend to put Diode for protection purpose in case of output pin connected with large load of impedance or reserve current occurred at initial and output off.

Notes

- No technical content pages of this document may be reproduced in any form or transmitted by any means without prior permission of ROHM CO.,LTD.
- The contents described herein are subject to change without notice. The specifications for the product described in this document are for reference only. Upon actual use, therefore, please request that specifications to be separately delivered.
- Application circuit diagrams and circuit constants contained herein are shown as examples of standard use and operation. Please pay careful attention to the peripheral conditions when designing circuits and deciding upon circuit constants in the set.
- Any data, including, but not limited to application circuit diagrams information, described herein are intended only as illustrations of such devices and not as the specifications for such devices. ROHM CO.,LTD. disclaims any warranty that any use of such devices shall be free from infringement of any third party's intellectual property rights or other proprietary rights, and further, assumes no liability of whatsoever nature in the event of any such infringement, or arising from or connected with or related to the use of such devices.
- Upon the sale of any such devices, other than for buyer's right to use such devices itself, resell or otherwise dispose of the same, no express or implied right or license to practice or commercially exploit any intellectual property rights or other proprietary rights owned or controlled by
- ROHM CO., LTD. is granted to any such buyer.
- Products listed in this document are no antiradiation design.

The products listed in this document are designed to be used with ordinary electronic equipment or devices (such as audio visual equipment, office-automation equipment, communications devices, electrical appliances and electronic toys).
Should you intend to use these products with equipment or devices which require an extremely high level of reliability and the malfunction of with would directly endanger human life (such as medical instruments, transportation equipment, aerospace machinery, nuclear-reactor controllers, fuel controllers and other safety devices), please be sure to consult with our sales representative in advance.

About Export Control Order in Japan

Products described herein are the objects of controlled goods in Annex 1 (Item 16) of Export Trade Control Order in Japan.
In case of export from Japan, please confirm if it applies to "objective" criteria or an "informed" (by MITI clause) on the basis of "catch all controls for Non-Proliferation of Weapons of Mass Destruction.

Thank you for your accessing to ROHM product informations.

More detail product informations and catalogs are available,

please contact your nearest sales office.

Please contact our sales offices for details ;

U.S.A / San Diego	TEL : +1(858)625-3630	FAX : +1(858)625-3670
Atlanta	TEL : +1(770)754-5972	FAX : +1(770)754-0691
Dallas	TEL : +1(972)312-8818	FAX : +1(972)312-0330
Germany / Dusseldorf	TEL : +49(2154)9210	FAX : +49(2154)921400
United Kingdom / London	TEL : +44(1)908-282-666	FAX : +44(1)908-282-528
France / Paris	TEL : +33(0)1 56 97 30 60	FAX : +33(0) 1 56 97 30 80
China / Hong Kong	TEL : +852(2)740-6262	FAX : +852(2)375-8971
Shanghai	TEL : +86(21)6279-2727	FAX : +86(21)6247-2066
Dilian	TEL : +86(411)8230-8549	FAX : +86(411)8230-8537
Beijing	TEL : +86(10)8525-2483	FAX : +86(10)8525-2489
Taiwan / Taipei	TEL : +866(2)2500-6956	FAX : +866(2)2503-2869
Korea / Seoul	TEL : +82(2)8182-700	FAX : +82(2)8182-715
Singapore	TEL : +65-6332-2322	FAX : +65-6332-5662
Malaysia / Kuala Lumpur	TEL : +60(3)7958-8355	FAX : +60(3)7958-8377
Philippines / Manila	TEL : +63(2)807-6872	FAX : +63(2)809-1422
Thailand / Bangkok	TEL : +66(2)254-4890	FAX : +66(2)256-6334

Japan /
(Internal Sales)

Tokyo	2-1-1, Yaesu, Chuo-ku, Tokyo 104-0082	
	TEL : +81(3)5203-0321	FAX : +81(3)5203-0300
Yokohama	2-4-8, Shin Yokohama, Kohoku-ku, Yokohama, Kanagawa 222-8575	
	TEL : +81(45)476-2131	FAX : +81(45)476-2128
Nagoya	Dainagayo Building 9F 3-28-12, Meieki, Nakamura-ku, Nagoya,Aichi 450-0002	
	TEL : +81(52)581-8521	FAX : +81(52)561-2173
Kyoto	579-32 Higashi Shiokouji-cho, Karasuma Nishi-iru, Shiokoujidori, Shimogyo-ku, Kyoto 600-8216	
	TEL : +81(75)311-2121	FAX : +81(75)314-6559

(Contact address for overseas customers in Japan)

Yokohama	TEL : +81(45)476-9270	FAX : +81(045)476-9271

As of 18th. April 2005