LED Driver

- Supplies stable bias current even at low battery voltage
- Low voltage drop of 0.75V
- Ideal for stabilizing bias current of LEDs
- Negative temperature coefficient protects LEDs against thermal overload

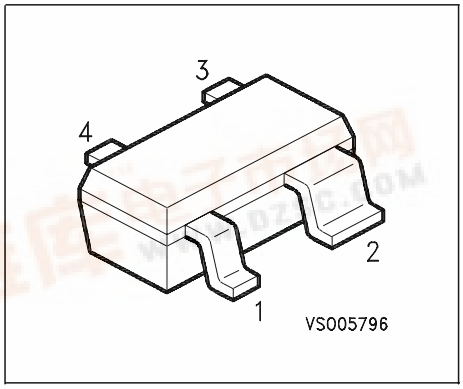

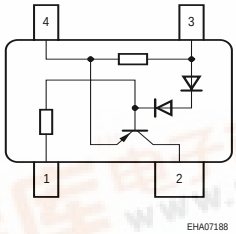

Type	Marking	Pin Configuration				Package
BCR401R	W5s	1 = GND	2 = I_{out}	3 = V_S	4 = R_{ext}	SOT143R

Maximum Ratings

Parameter	Symbol	Value	Unit
Source voltage	V_S	18	V
Output current	I_{out}	60	mA
Output voltage	V_{out}	16	V
Reverse voltage between all terminals	V_R	0.5	
Total power dissipation, T_S = 87 °C	P_{tot}	330	mW
Junction temperature	T_j	150	°C
Storage temperature	T_{stg}	-65 ... 150	

Thermal Resistance

Parameter	Symbol	Value	Unit
Junction - soldering point[1)]	R_{thJS}	190	K/W

[1]For calculation of R_{thJA} please refer to Application Note Thermal Resistance

Electrical Characteristics at T_A=25°C, unless otherwise specified

Parameter	Symbol	Values			Unit
		min.	typ.	max.	
Characteristics					
Supply current V_S = 10 V	I_S	350	440	540	µA
Output current V_S = 10 V, V_{out} = 7.6 V	I_{out}	9	10	11	mA
DC Characteristics with stabilized LED load					
Lowest sufficient battery voltage overhead I_{out} > 8mA	V_{Smin}	-	1.2	-	V
Voltage drop (V_S - V_{CE}) I_{out} = 20 mA	V_{drop}	-	0.75	-	
Output current change versus T_A V_S = 10 V	$\Delta I_{out}/I_{out}$	-	-0.3	-	%/K
Output current change versus V_S V_S = 10 V	$\Delta I_{out}/I_{out}$	-	2	-	%/V

Total power dissipation $P_{tot} = f(T_S)$

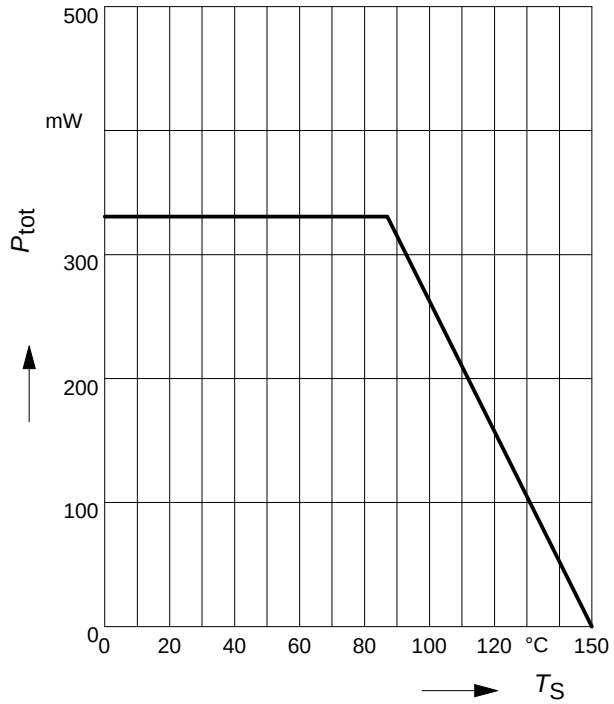

Output current versus supply voltage

$I_{out} = f(V_S)$; R_{ext} = Parameter

Load: two LEDs with V_F = 3.8V in series

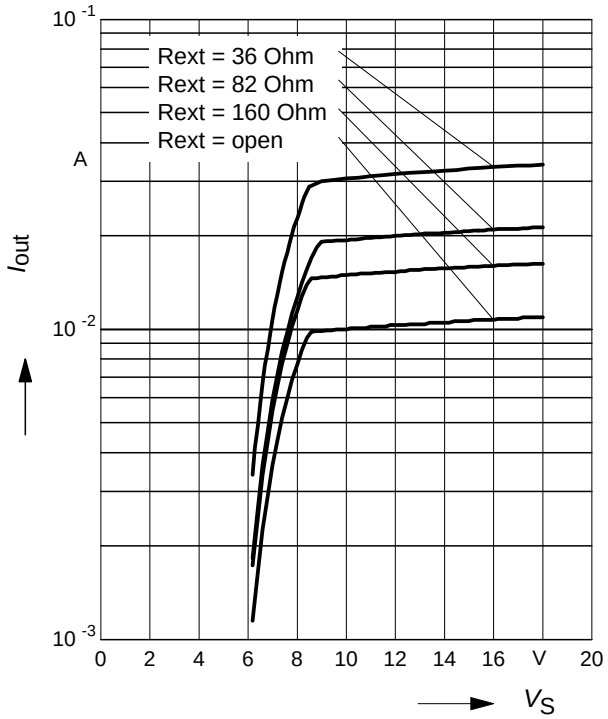

Supply current versus supply voltage

$I_S = f(V_S)$

Load: two LEDs with V_F = 3.8V in series

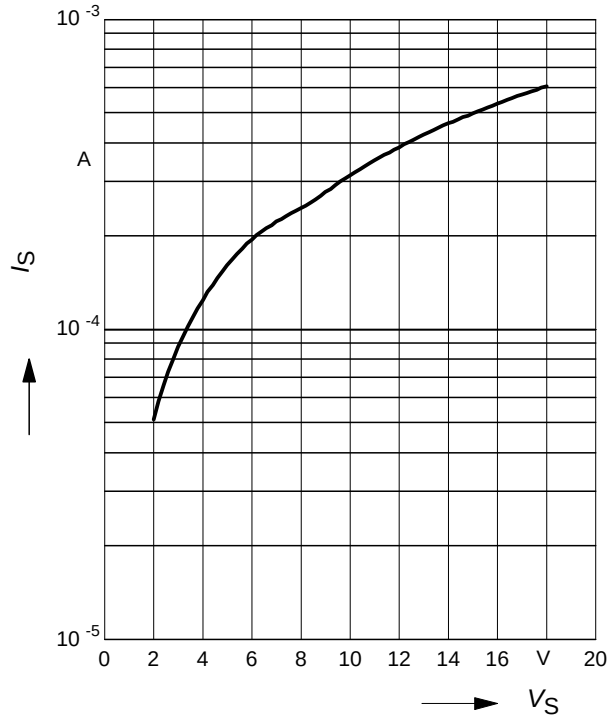

Application Circuit: