查询BD3538HFN供应商 捷多邦，专业PCB打样工厂，24小时加急出货

ROHM

STRUCTURE Silicon Monolithic Integrated Circuit

TYPE Regulator IC for Memory termination

PRODUCT SERIES **BD3538HFN**

FEATURES
- Incorporates a push-pull power supply for termination (VTT)
- Incorporates a reference voltage circuit(VREF)
- Compatible with Dual Channel (DDR-II)

○ ABSOLUTE MAXIMUM RATINGS (Ta=25℃)

Parameter	Symbol	Limit	Unit
Input Voltage	VCC	7 *1*2	V
Enable Input Voltage	VEN	7 *1*2	V
Termination Input Voltage	VTT_IN	7 *1*2	V
VDDQ Reference Voltage	VDDQ	7 *1*2	V
Output Current	ITT	1	A
Power Dissipation1	Pd1	630 *3	mW
Power Dissipation2	Pd2	1350 *4	mW
Power Dissipation3	Pd3	1750 *5	mW
Operating Temperature Range	Topr	-40～+105	℃
Storage Temperature Range	Tstg	-55～+150	℃
Maximum Junction Temperature	Tjmax	+150	℃

*1 Should not exceed Pd.
*2 Instantaneous surge voltage, back electromotive force and voltage under less than 10% duty cycle.
*3 With Ta≧25℃ when mounting a 70mm×70mm×1.6mm glass-epoxy substrate 1-layer board (copper foil density 0.2%) θja=198.4℃/W
*4 With Ta≧25℃ when mounting a 70mm×70mm×1.6mm glass-epoxy substrate 1-layer board (copper foil density 7%) θja=92.4℃/W
*5 With Ta≧25℃ when mounting a 70mm×70mm×1.6mm glass-epoxy substrate 1-layer board (copper foil density 65%) θja=71.4℃/W

○ OPERATING CONDITIONS (Ta=25℃)

PARAMETER	SYMBOL	MIN	MAX	UNIT
Input Voltage	VCC	2.7	5.5	V
Termination Input Voltage	VTT_IN	1.0	5.5	V
VDDQ Reference Voltage	VDDQ	1.0	2.75	V
Enable Input Voltage	VEN	-0.3	5.5	V

★ No radiation-resistant design is adopted for the present product.

The Japanese version of this document is the official specification.
This translated version is intended only as a reference, to aid in understanding the official version.
If there are any differences between the original and translated versions of this document, the official Japanese language version takes priority.

找PDF 维库一下 pdf.dzsc.com

○ ELECTRICAL CHARACTERISTICS
(Unless otherwise specified,Ta=25℃ VCC=3.3V VEN=3V VDDQ=1.8V VTT_IN=1.8V)

PARAMETER	SYMBOL	LIMIT			UNIT	CONDITIONS
		MIN	TYP	MAX		
Standby Current	IST	-	0.5	1.0	mA	VEN=0V
Bias Current	ICC	-	2	4	mA	VEN=3V
[Enable]						
High Level Enable Input Voltage	VENHIGH	2.3	-	5.5	V	
Low Level Enable Input Voltage	VENLOW	-0.3	-	0.8	V	
Enable Pin Input Current	IEN	-	7	10	uA	VEN=3V
[Termination]						
Termination Output Voltage 1	VTT1	VREF-30m	VREF	VREF+30m	V	ITT=-1.0A to 1.0A Ta=0℃ to 105℃
Termination Output Voltage 2	VTT2	VREF-30m	VREF	VREF+30m	V	VCC=5V, VDDQ=2.5V VTT_IN=2.5V ITT=-1.0A to 1.0A Ta=0℃ to 105℃
Source Current	ITT+	1.0	-	-	A	
Sink Current	ITT-	-	-	-1.0	A	
Load Regulation	⊿VTT	-	-	50	mV	ITT=-1.0A to 1.0A
Line Regulation	Reg.I	-	20	40	mV	
Upper Side ON Resistance 1	HRON1	-	0.45	0.9	Ω	
Lower Side ON Resistance 1	LRON1	-	0.45	0.9	Ω	
Upper Side ON Resistance 2	HRON2	-	0.4	0.8	Ω	Vcc=5V, VDDQ=2.5V VTT_IN=2.5V
Lower Side ON Resistance 2	LRON2	-	0.4	0.8	Ω	Vcc=5V, VDDQ=2.5V VTT_IN=2.5V
[Input of Reference Voltage]						
Input Impedance	ZVDDQ	70	100	130	kΩ	
[Reference voltage]						
Output Voltage 1	VREF1	1/2×VDDQ -18m	1/2×VDDQ	1/2×VDDQ +18m	V	IREF=-5mA to 5mA Ta=0℃ to 105℃
Output Voltage 2	VREF2	1/2×VDDQ -40m	1/2×VDDQ	1/2×VDDQ +40m	V	IREF=-10mA to 10mA Ta=0℃ to 105℃
Output Voltage 3	VREF3	1/2×VDDQ -25m	1/2×VDDQ	1/2×VDDQ +25m	V	VCC=5V, VDDQ=2.5V VTT_IN=2.5V IREF=-5mA to 5mA Ta=0℃ to 105℃
Output Voltage 4	VREF4	1/2×VDDQ -40m	1/2×VDDQ	1/2×VDDQ +40m	V	VCC=5V, VDDQ=2.5V VTT_IN=2.5V IREF=-10mA to 10mA Ta=0℃ to 105℃
[UVLO]						
UVLO OFF Voltage	VUVLO	2.40	2.55	2.70	V	VCC : sweep up
Hysteresis Voltage	⊿VUVLO	100	160	220	mV	VCC : sweep down

○ PHYSICAL DIMENSIONS

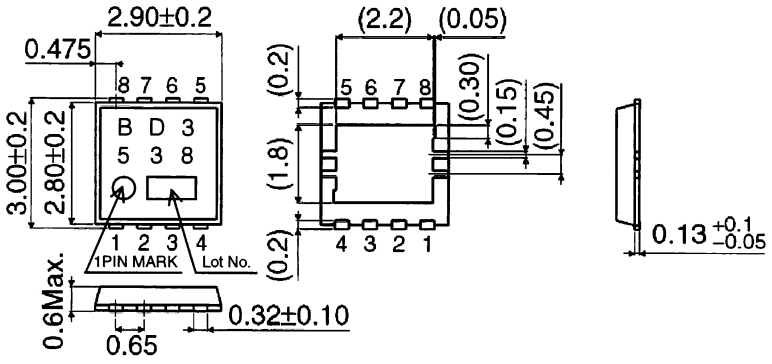

HSON8 (Unit:mm)

○ BLOCK DIAGRAM

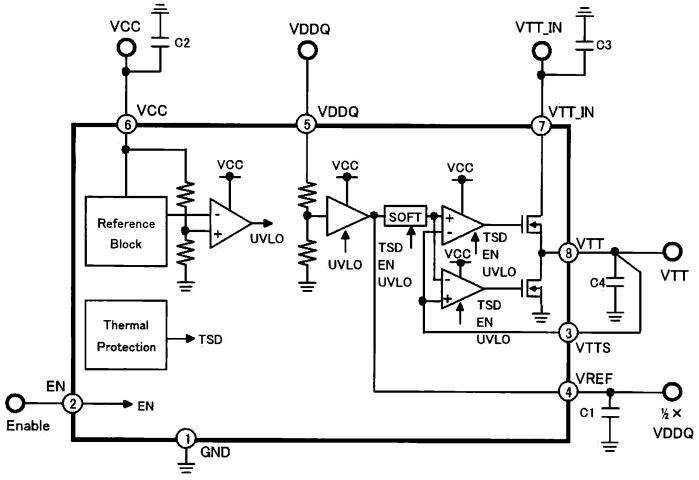

○ Pin number Pin name

Pin No.	Pin Name
1	GND
2	EN
3	VTTS
4	VREF
5	VDDQ
6	VCC
7	VTT_IN
8	VTT
FIN	–

○NOTES FOR USE

(1) Absolute maximum range
Although the quality of this product is rigorously controlled, and circuit operation is guaranteed within the operation ambient temperature range, the device may be destroyed when applied voltage or operating temperature exceeds its absolute maximum rating. Because the failure mode (such as short mode or open mode) cannot be identified in this instance, it is important to take physical safety measures such as fusing if a specific mode in excess of absolute rating limits is considered for implementation.

(2) Ground potential
Make sure the potential for the GND pin is always kept lower than the potentials of all other pins, regardless of the operating mode, including transient conditions.

(3) Thermal Design
Provide sufficient margin in the thermal design to account for the allowable power dissipation (Pd) expected in actual use.

(4) Using in the strong electromagnetic field
Use in strong electromagnetic fields may cause malfunctions.

(5) ASO
Be sure that the output transistor for this IC does not exceed the absolute maximum ratings or ASO value.

(6) Thermal shutdown circuit
The IC is provided with a built-in thermal shutdown (TSD) circuit. When chip temperature reaches the threshold temperature shown below, output goes to a cut-off (open) state. Note that the TSD circuit is designed exclusively to shut down the IC in abnormal thermal conditions. It is not intended to protect the IC per se or guarantee performance when extreme heat occurs. Therefore, the TSD circuit should not be employed with the expectation of continued use or subsequent operation once TSD is operated.

TSD ON temperature [℃] (typ.)	Hysteresis temperature [℃] (typ.)
175	15

(7) GND pattern
When both a small-signal GND and high current GND are present, single-point grounding (at the set standard point) is recommended, in order to separate the small-signal and high current patterns, and to be sure the voltage change stemming from the wiring resistance and high current does not cause any voltage change in the small-signal GND. In the same way, care must be taken to avoid wiring pattern fluctuations in any connected external component GND.

(8) Output Capacitor (C1)
Mount an output capacitor between VREF and GND for stability purposes. The VREF output capacitor is for the open loop gain phase compensation. If the capacitor value is not large enough, the output voltage may oscillate. A ceramic 1.0 - 10uF capacitor with minimal susceptibility to temperature is recommended. However, this stability depends on the characteristics of temperature and load. Please confirm operation across a variety of temperature and load conditions.

(9) Output Capacitor (C4)
Mount an output capacitor between VTT and GND for stability purposes. The output capacitor is for the open loop gain phase compensation and reduces the output voltage load regulation. If the capacitor value is not large enough, the output voltage may oscillate. And if the equivalent series resistance (ESR) is too large, the output voltage rise/drop increases during a sudden load change. A 47 - 220uF polymer capacitor is recommended. However, the stability depends on the characteristics of temperature and load conditions. And if a small ESR capacitor such as a ceramic capacitor is utilized, the output voltage may oscillate due to lack of phase margin. In this case, measures can be taken by adding a resistor in series with this capacitor. Please confirm operation across a variety of temperature and load conditions.

(10) Input Capacitor (C2, C3)
The input capacitor reduces the output impedence of the voltage supply source connected in the VCC and VTT_IN. If the output impedence of this power supply increases, the input voltage (VCC,VTT_IN) may become unstable. This may result in the output voltage oscillation or lowering ripple rejection. A low ESR 1uF capacitor in VCC and 10uF capacitor in VTT_IN with minimal susceptibility to temperature are preferable, but stability depends on power supply characteristics and the substrate wiring pattern (a parasitic capacitance and impedance). Please confirm operation across a variety of temperature and load conditions.

(11) Input (VCC, VDDQ, VTT_IN, EN)
The VCC, VDDQ, VTT_IN, and EN are isolated. The UVLO function is integrated to protect faulty operation due to low voltage levels of VCC. VTT output voltage starts up when VCC reaches the UVLO threshold level and EN reaches the threshold level respectively regardless of the start up order in those inputs. And also VREF output voltage starts up when VCC reaches the UVLO threshold level. When the VDDQ and VTT_IN has the same voltage and are supposed to connect each other, VDDQ pin voltage may change due to the voltage drop on the VTT_IN and VDDQ common wiring caused by VTT_IN input current change. This may result in the voltage change of the VTT output. Avoid drawing wiring pattern of VDDQ and VTT_IN so that they do not have common wiring. If the common wiring is inevitable due to limited PCB area, it is recommended that CR filter be added between VTT_IN and VDDQ.

(12) VTTS
VTTS is to improve load regulation of VTT output. For precise load regulation, VTTS is connected close by VTT to avoid common impedance.

(Example)

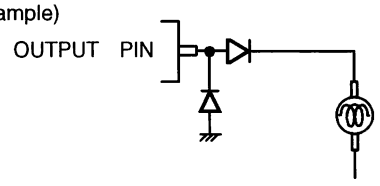

(13) Heat sink (FIN)
Since the heat sink (FIN) is connected with the Sub, short it to the GND.
It is possible to minimize the thermal resistance by soldering it to GND plane of PCB.

(14) Short-circuits between pins and and mounting errors
Do not short-circuit between output pin (Vo) and supply pin (Vcc) or ground (GND), or between supply pin (Vcc) and ground (GND). Mounting errors, such as incorrect positioning or orientation, may destroy the device.

(15) Please add a protection diode when a large inductance component is connected to the output terminal, and reverse-polarity power is possible at startup or in output OFF condition

Notes

- No technical content pages of this document may be reproduced in any form or transmitted by any means without prior permission of ROHM CO.,LTD.
- The contents described herein are subject to change without notice. The specifications for the product described in this document are for reference only. Upon actual use, therefore, please request that specifications to be separately delivered.
- Application circuit diagrams and circuit constants contained herein are shown as examples of standard use and operation. Please pay careful attention to the peripheral conditions when designing circuits and deciding upon circuit constants in the set.
- Any data, including, but not limited to application circuit diagrams information, described herein are intended only as illustrations of such devices and not as the specifications for such devices. ROHM CO.,LTD. disclaims any warranty that any use of such devices shall be free from infringement of any third party's intellectual property rights or other proprietary rights, and further, assumes no liability of whatsoever nature in the event of any such infringement, or arising from or connected with or related to the use of such devices.
- Upon the sale of any such devices, other than for buyer's right to use such devices itself, resell or otherwise dispose of the same, no express or implied right or license to practice or commercially exploit any intellectual property rights or other proprietary rights owned or controlled by
- ROHM CO., LTD. is granted to any such buyer.
- Products listed in this document are no antiradiation design.

The products listed in this document are designed to be used with ordinary electronic equipment or devices (such as audio visual equipment, office-automation equipment, communications devices, electrical appliances and electronic toys).
Should you intend to use these products with equipment or devices which require an extremely high level of reliability and the malfunction of with would directly endanger human life (such as medical instruments, transportation equipment, aerospace machinery, nuclear-reactor controllers, fuel controllers and other safety devices), please be sure to consult with our sales representative in advance.

About Export Control Order in Japan

Products described herein are the objects of controlled goods in Annex 1 (Item 16) of Export Trade Control Order in Japan.
In case of export from Japan, please confirm if it applies to "objective" criteria or an "informed" (by MITI clause) on the basis of "catch all controls for Non-Proliferation of Weapons of Mass Destruction.

Thank you for your accessing to ROHM product informations.

More detail product informations and catalogs are available,

please contact your nearest sales office.

Please contact our sales offices for details ;

U.S.A / San Diego	TEL : +1(858)625-3630	FAX : +1(858)625-3670
Atlanta	TEL : +1(770)754-5972	FAX : +1(770)754-0691
Dallas	TEL : +1(972)312-8818	FAX : +1(972)312-0330
Germany / Dusseldorf	TEL : +49(2154)9210	FAX : +49(2154)921400
United Kingdom / London	TEL : +44(1)908-282-666	FAX : +44(1)908-282-528
France / Paris	TEL : +33(0)1 56 97 30 60	FAX : +33(0) 1 56 97 30 80
China / Hong Kong	TEL : +852(2)740-6262	FAX : +852(2)375-8971
Shanghai	TEL : +86(21)6279-2727	FAX : +86(21)6247-2066
Dilian	TEL : +86(411)8230-8549	FAX : +86(411)8230-8537
Beijing	TEL : +86(10)8525-2483	FAX : +86(10)8525-2489
Taiwan / Taipei	TEL : +866(2)2500-6956	FAX : +866(2)2503-2869
Korea / Seoul	TEL : +82(2)8182-700	FAX : +82(2)8182-715
Singapore	TEL : +65-6332-2322	FAX : +65-6332-5662
Malaysia / Kuala Lumpur	TEL : +60(3)7958-8355	FAX : +60(3)7958-8377
Philippines / Manila	TEL : +63(2)807-6872	FAX : +63(2)809-1422
Thailand / Bangkok	TEL : +66(2)254-4890	FAX : +66(2)256-6334

Japan /
(Internal Sales)

Tokyo	2-1-1, Yaesu, Chuo-ku, Tokyo 104-0082	
	TEL : +81(3)5203-0321	FAX : +81(3)5203-0300
Yokohama	2-4-8, Shin Yokohama, Kohoku-ku, Yokohama, Kanagawa 222-8575	
	TEL : +81(45)476-2131	FAX : +81(45)476-2128
Nagoya	Dainagayo Building 9F 3-28-12, Meieki, Nakamura-ku, Nagoya,Aichi 450-0002	
	TEL : +81(52)581-8521	FAX : +81(52)561-2173
Kyoto	579-32 Higashi Shiokouji-cho, Karasuma Nishi-iru, Shiokoujidori, Shimogyo-ku, Kyoto 600-8216	
	TEL : +81(75)311-2121	FAX : +81(75)314-6559

(Contact address for overseas customers in Japan)

Yokohama	TEL : +81(45)476-9270	FAX : +81(045)476-9271

As of 18th. April 2005