Silicon N-Channel MOSFET Tetrode

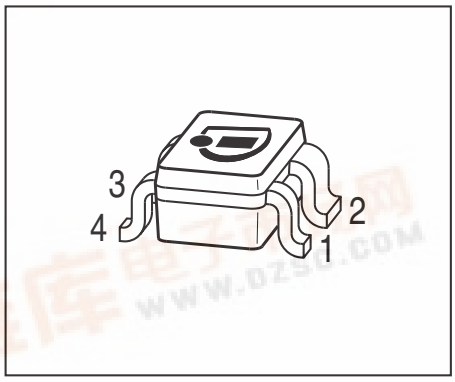

- Low noise gain controlled input stages of UHF-and VHF - tuners with 3V up to 5V supply voltage
- Integrated gate protection diodes
- Low noise figure
- High gain, high forward transadmittance
- Improved cross modulation at gain reduction

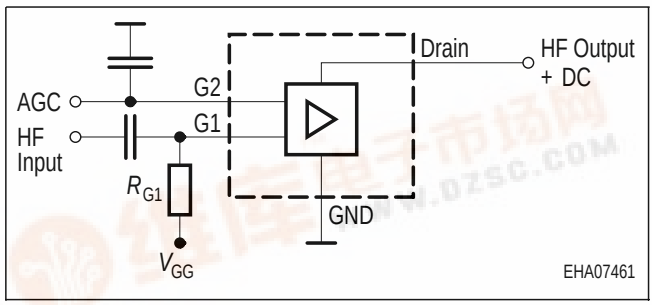

ESD (**E**lectro**s**tatic **d**ischarge) sensitive device, observe handling precaution!

Type	Package	Pin Configuration						Marking
BF5030W	SOT343	1=D	2=S	3=G1	4=G2	-	-	KXs

Maximum Ratings

Parameter	Symbol	Value	Unit
Drain-source voltage	V_{DS}	8	V
Continuous drain current	I_D	25	mA
Gate 1/ gate 2-source current	$\pm I_{G1/2SM}$	1	
Gate 1/ gate 2-source voltage	$\pm V_{G1/G2S}$	6	V
Total power dissipation $T_S \leq 78$ °C	P_{tot}	200	mW
Storage temperature	T_{stg}	-55 ... 150	°C
Channel temperature	T_{ch}	150	

Thermal Resistance

Parameter	Symbol	Value	Unit
Channel - soldering point[1)]	R_{thchs}	≤ 280	K/W

[1]For calculation of R_{thJA} please refer to Application Note Thermal Resistance

Electrical Characteristics at T_A = 25°C, unless otherwise specified

Parameter	Symbol	Values			Unit
		min.	typ.	max.	
DC Characteristics					
Drain-source breakdown voltage I_D = 1 µA, V_{G1S} = 0 , V_{G2S} = 0	$V_{(BR)DS}$	12	-	-	V
Gate1-source breakdown voltage $+I_{G1S}$ = 10 mA, V_{G2S} = 0 , V_{DS} = 0	$+V_{(BR)G1SS}$	6	-	15	
Gate2-source breakdown voltage $+I_{G2S}$ = 10 mA, V_{G1S} = 0 , V_{DS} = 0	$+V_{(BR)G2SS}$	6	-	15	
Gate1-source leakage current V_{G1S} = 6 V, V_{G2S} = 0 , V_{DS} = 0	$+I_{G1SS}$	-	-	50	nA
Gate2-source leakage current V_{G2S} = 6 V, V_{G1S} = 0 , V_{DS} = 0	$+I_{G2SS}$	-	-	50	
Drain current V_{DS} = 3 V, V_{G1S} = 0 , V_{G2S} = 3 V	I_{DSS}	-	-	100	
Drain-source current V_{DS} = 3 V, V_{G2S} = 3 V, R_{G1} = 68 kΩ	I_{DSX}	-	12	-	mA
Gate1-source pinch-off voltage V_{DS} = 3 V, V_{G2S} = 3 V, I_D = 20 µA	$V_{G1S(p)}$	-	0.6	-	V
Gate2-source pinch-off voltage V_{DS} = 3 V, V_{G1S} = 3 V, I_D = 20 µA	$V_{G2S(p)}$	-	0.7	-	

Electrical Characteristics at T_A = 25°C, unless otherwise specified

Parameter	Symbol	Values			Unit
		min.	typ.	max.	
AC Characteristics - (verified by random sampling)					
Forward transconductance V_{DS} = 3 V, V_{G2S} = 3 V	g_{fs}	-	41	-	mS
Gate1 input capacitance V_{DS} = 3 V, V_{G2S} = 3 V, f = 10 MHz	C_{g1ss}	-	2.7	-	pF
Output capacitance V_{DS} = 3 V, V_{G2S} = 3 V, f = 10 MHz	C_{dss}	-	1.6	-	
Power gain V_{DS} = 3 V, I_D = 10 mA, V_{G2S} = 3 V, f = 800 MHz V_{DS} = 3 V, I_D = 10 mA, V_{G2S} = 3 V, f = 45 MHz	G_p	 - -	 24 35	 - -	dB
Noise figure V_{DS} = 3 V, I_D = 10 mA, V_{G2S} = 3 V, f = 800 MHz V_{DS} = 3 V, I_D = 10 mA, V_{G2S} = 3 V, f = 45 MHz	F	 - -	 1.3 1	 - -	dB
Gain control range V_{DS} = 3 V, V_{G2S} = 3...0 V , f = 800 MHz	ΔG_p	45	-	-	
Cross-modulation k=1%, f_w=50MHz, f_{unw}=60MHz AGC = 0 AGC = 10 dB AGC = 40 dB	X_{mod}	 90 - 96	 94 92 98	 - - -	dB

Total power dissipation $P_{tot} = f(T_S)$

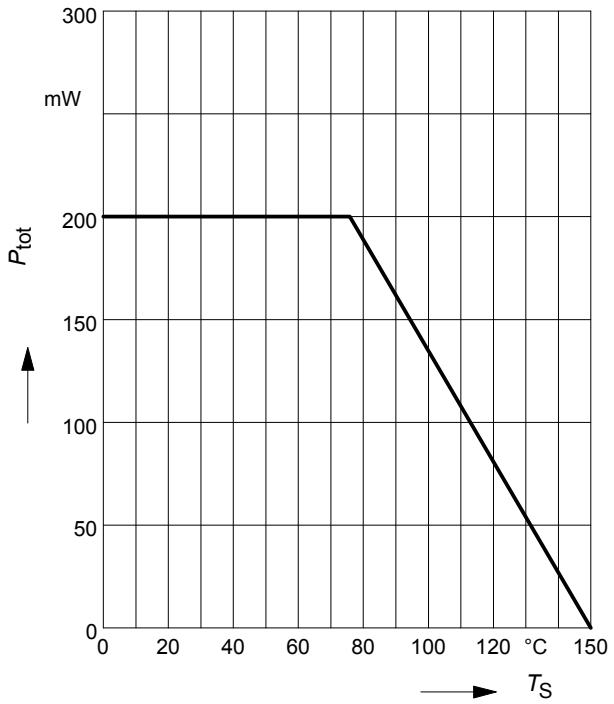

Drain current $I_D = f(I_{G1})$

V_{G2S} = 3V

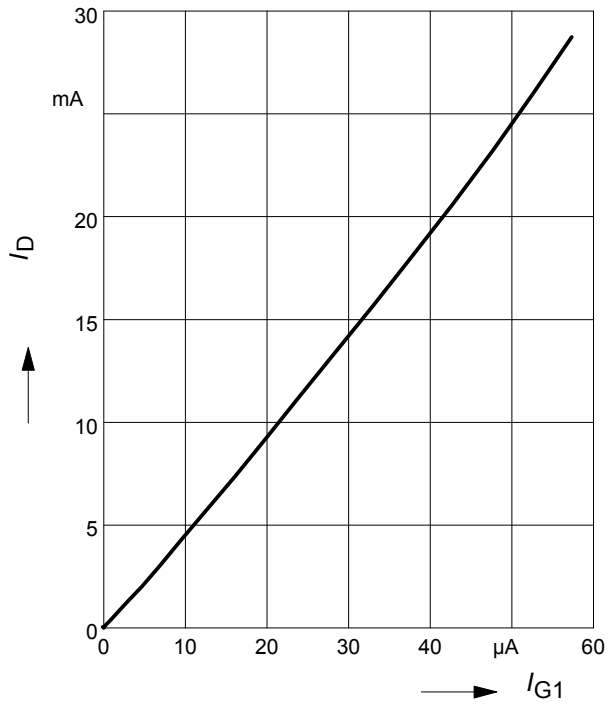

Output characteristics $I_D = f(V_{DS})$

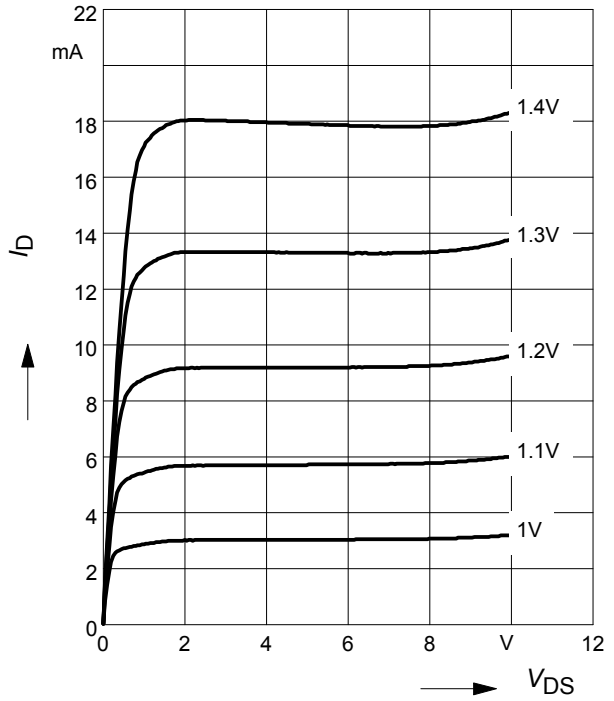

Gate 1 current $I_{G1} = f(V_{G1S})$

V_{DS} = 3V

V_{G2S} = Parameter

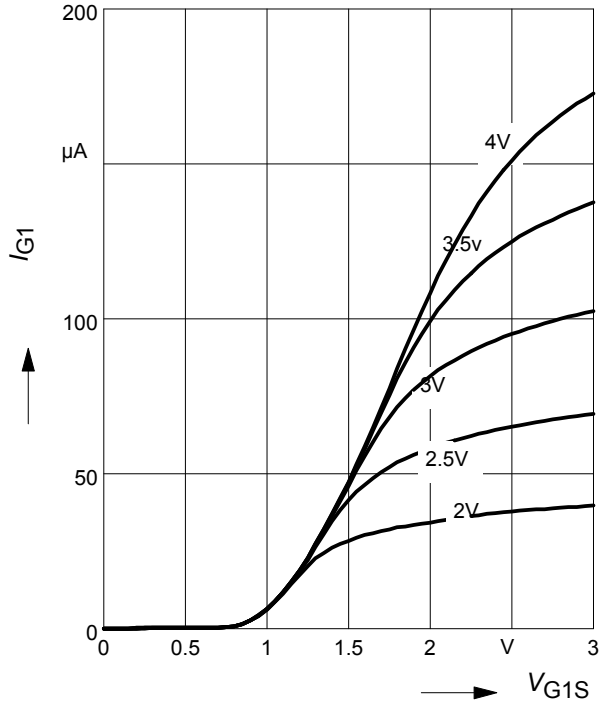

Gate 1 forward transconductance

$g_{fs} = f(I_D)$

V_{DS} = 3V, V_{G2S} = Parameter

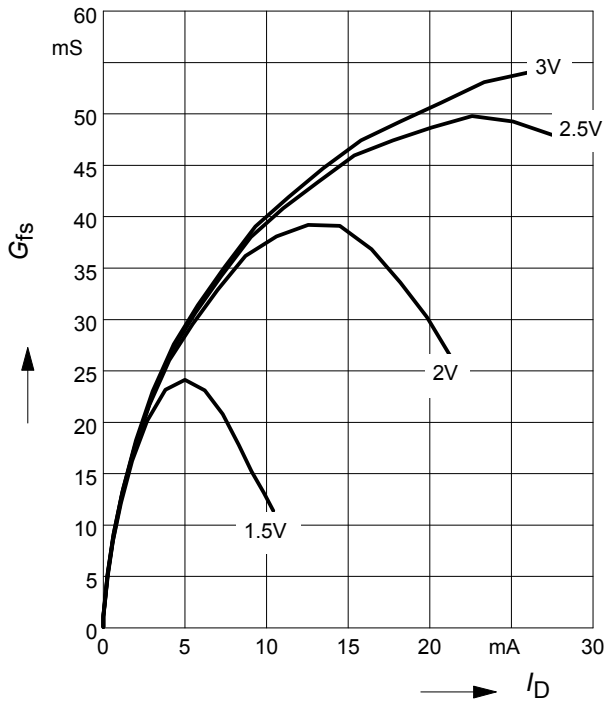

Drain current $I_D = f(V_{G1S})$

V_{DS} = 3V

V_{G2S} = Parameter

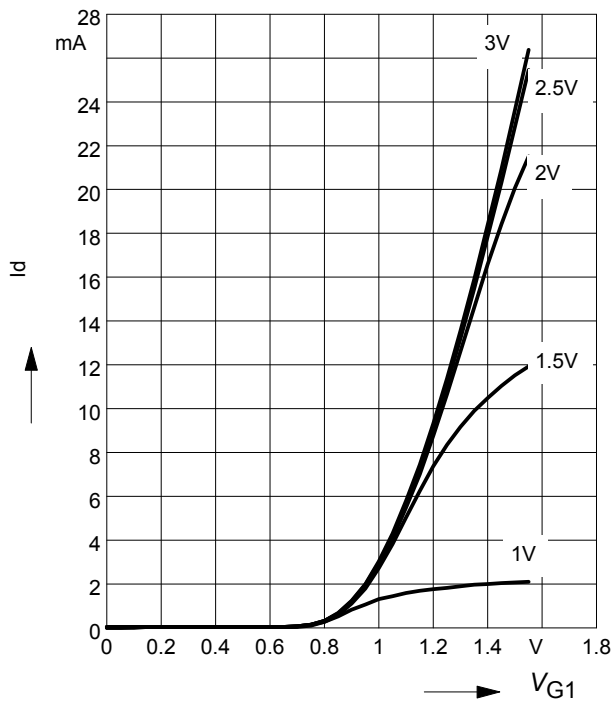

Drain current $I_D = f(V_{GG})$

V_{DS} = 3V, V_{G2S} = 3V, R_{G1} = 68kΩ

(connected to V_{GG}, V_{GG}=gate1 supply voltage)

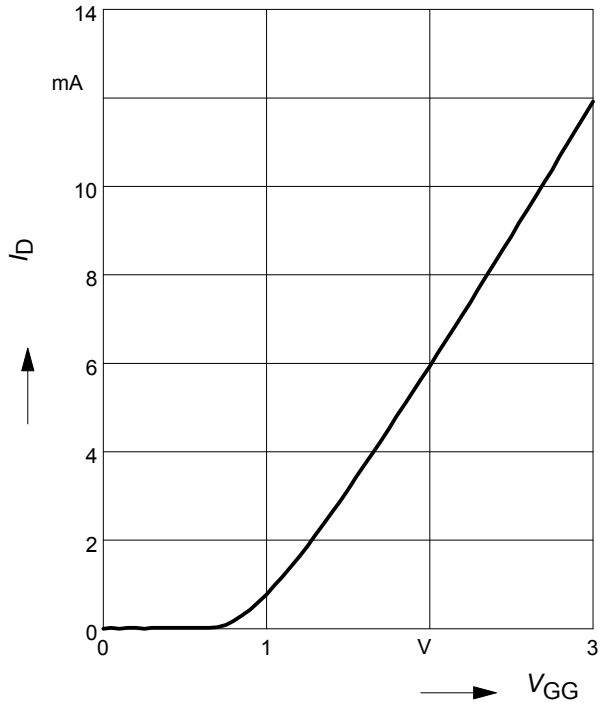

Drain current $I_D = f(V_{GG})$

V_{G2S} = 3V

R_{G1} = Parameter in kΩ

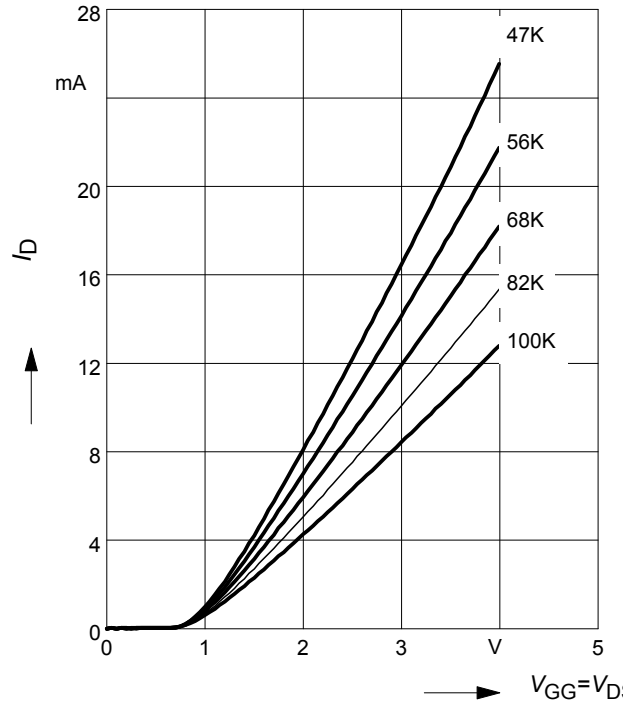

Power gain $G_{ps} = f\ (V_{G2S})$
f = 45 MHz

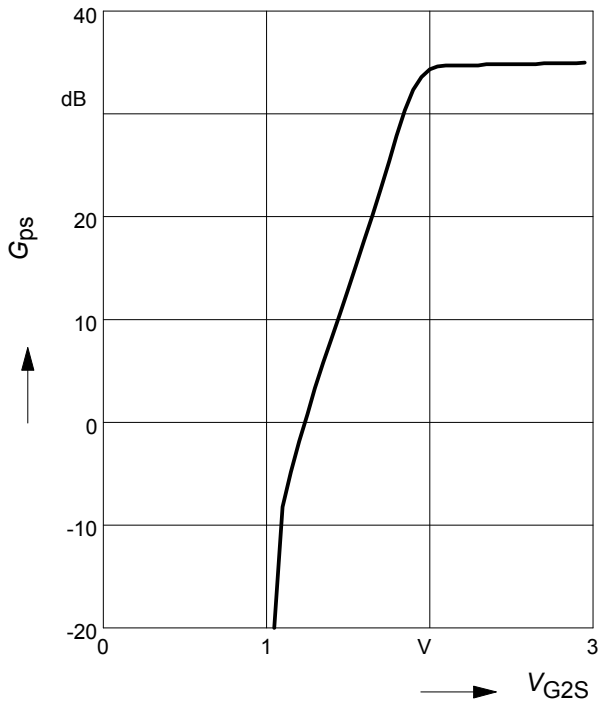

Noise figure $F = f\ (V_{G2S})$
f = 45 MHz

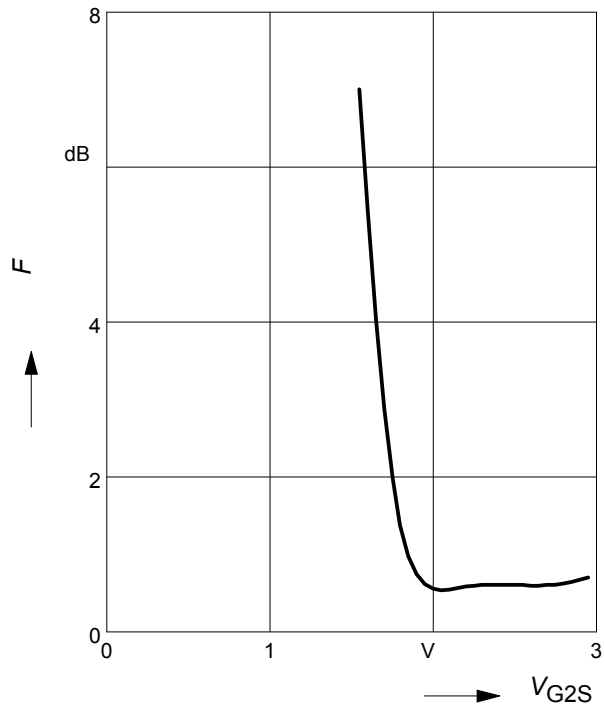

Noise figure $F = f\ (V_{G2S})$
f = 800 MHz

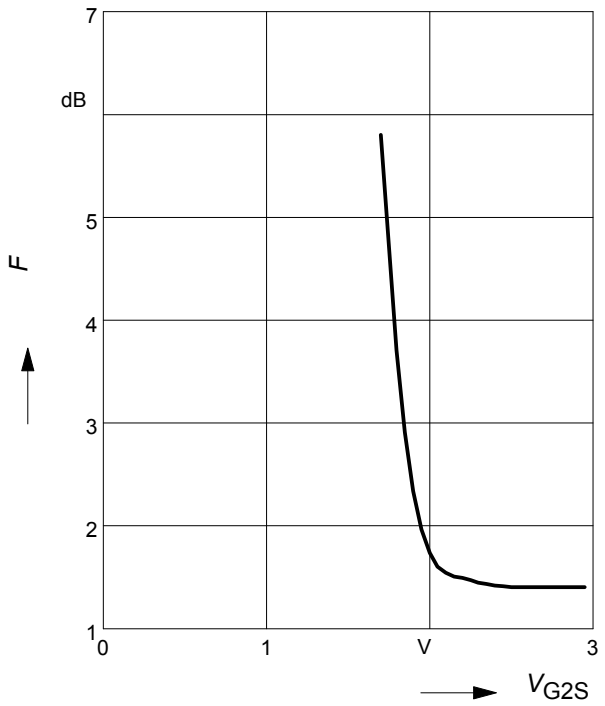

Power gain $G_{ps} = f\ (V_{G2S})$
f = 800 GHz

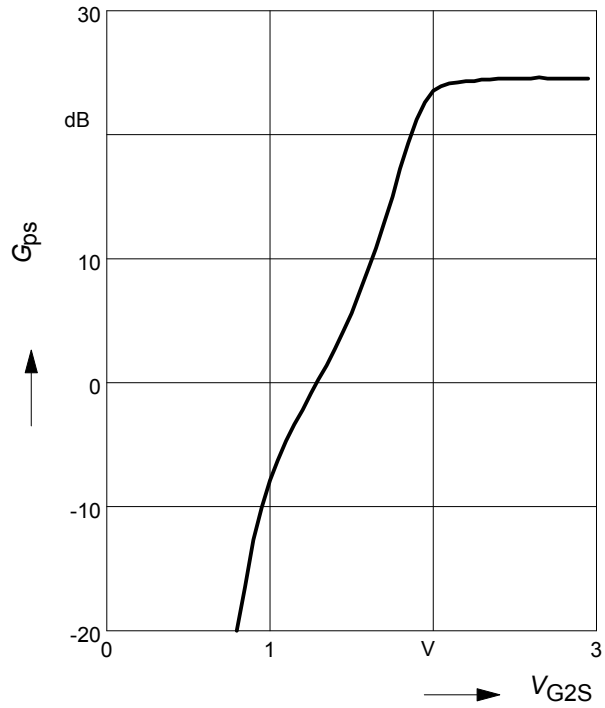

Crossmodulation V_{unw} = (*AGC*)
V_{DS} = 3 V, R_{g1} = 68 kΩ

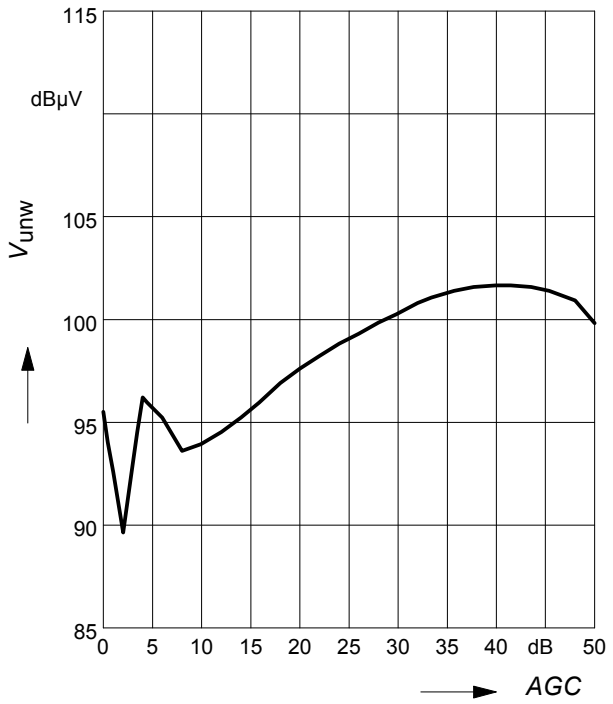

Crossmodulation test circuit

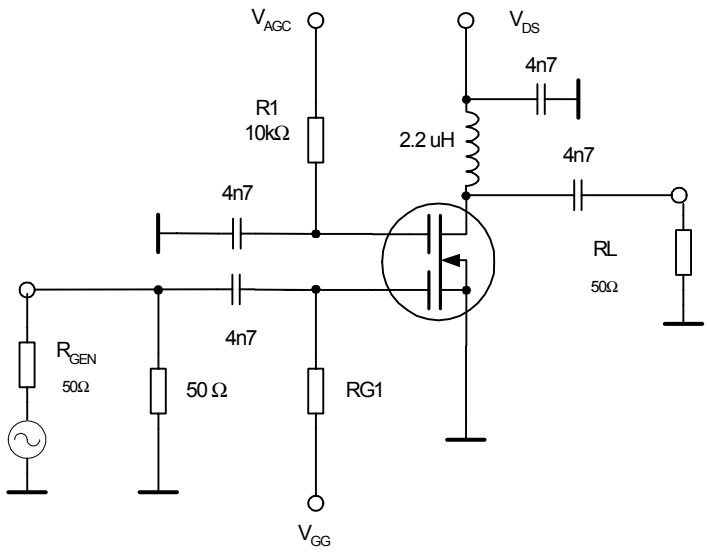

Semibiased

Package Outline

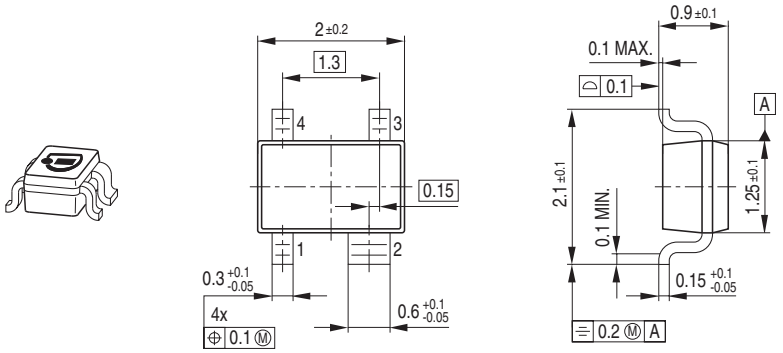

Foot Print

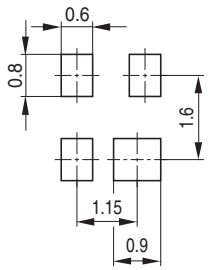

Marking Layout (Example)

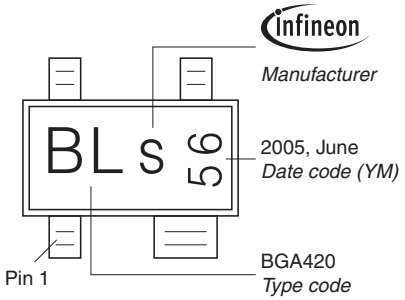

Standard Packing

Reel ø180 mm = 3.000 Pieces/Reel
Reel ø330 mm = 10.000 Pieces/Reel

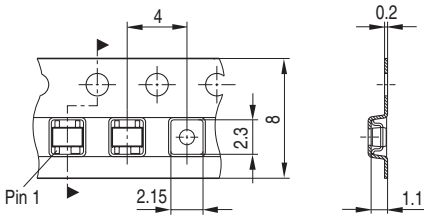

Edition 2006-02-01
Published by
Infineon Technologies AG
81726 München, Germany

Attention please!

The information given in this dokument shall in no event be regarded as a guarantee of conditions or characteristics ("Beschaffenheitsgarantie"). With respect to any examples or hints given herein, any typical values stated herein and/or any information regarding the application of the device, Infineon Technologies hereby disclaims any and all warranties and liabilities of any kind, including without limitation warranties of non-infringement of intellectual property rights of any third party.

Information

For further information on technology, delivery terms and conditions and prices please contact your nearest Infineon Technologies Office (**www.infineon.com**).

Warnings

Due to technical requirements components may contain dangerous substances. For information on the types in question please contact your nearest Infineon Technologies Office.
Infineon Technologies Components may only be used in life-support devices or systems with the express written approval of Infineon Technologies, if a failure of such components can reasonably be expected to cause the failure of that life-support device or system, or to affect the safety or effectiveness of that device or system.
Life support devices or systems are intended to be implanted in the human body, or to support and/or maintain and sustain and/or protect human life. If they fail, it is reasonable to assume that the health of the user or other persons may be endangered.