查询DS8629N供应商 捷多邦，专业PCB打样工厂，24小时加急出货



National Semiconductor

# DS8629 120 MHz Divide-by-100 Prescaler

## General Description

The DS8629 is a fixed ratio counter combining ECL and Low Power Schottky technology on a single monolithic substrate. This provides high frequency capability and TTL compatibility. A single 5.2V ±10% supply is needed.

The device can be operated in a single-ended or differential input mode, with the signal source typically capacitively coupled to the input. An input amplifier is included to allow use of extremely small amplitude, high frequency signals. The output of the device is a square wave of frequency $f_{OUT} = f_{IN}/100$ for the DS8629. The output is standard Low Power Schottky.

## Features

- High Frequency, dc—120 MHz—small input amplitude
- Sine wave input 30 MHz < $f_{IN}$ < 120 MHz
- TTL compatible output
- May be used with TTL input
- Single supply operation 5.2V ±10%
- Single ended or differential input modes
- Positive or negative-edge triggered
- Count down sequence avoids broadcast FM IF harmonics

## Logic and Connection Diagrams

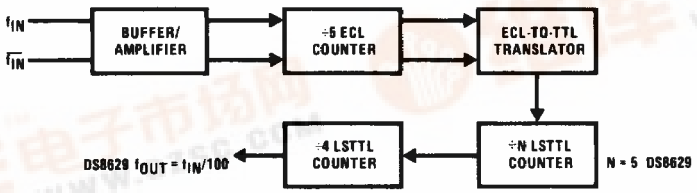


TL/F/7539–1

**Dual-In-Line Package**

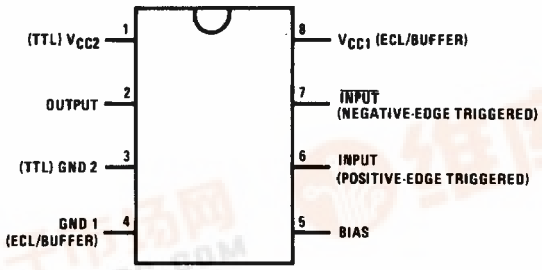


TL/F/7539–2

**Order Number DS8629N**
**See NS Package Number N08E**

## Typical Applications

**High Frequency—Single-Ended Input**

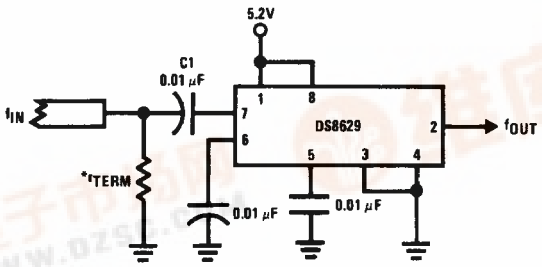


TL/F/7539–3

*$r_{TERM}$ is the termination impedance





找PDF 维库一下 pdf.dzsc.com

## Absolute Maximum Ratings (Note 1)

**If Military/Aerospace specified devices are required, contact the National Semiconductor Sales Office/ Distributors for availability and specifications.**

| | |
|---|---|
| Supply Voltage | 7V |
| Input Voltage | 5V |
| Output Voltage | 5.5V |
| Storage Temperature Range | −65°C to +150°C |
| Lead Temperature (Soldering, 10 sec.) | 300°C |

## Operating Conditions

| | Min | Max | Units |
|---|---|---|---|
| Supply Voltage ($V_{CC}$) | 4.68 | 5.72 | V |
| Temperature ($T_A$) | 0 | +70 | °C |

## Electrical Characteristics (Notes 2 and 3)

| Symbol | Parameter | Conditions | | Min | Typ | Max | Units |
|---|---|---|---|---|---|---|---|
| $V_{IN1(p-p)}$ | Input Voltage (Peak-To-Peak) | Single-Ended @ 120 MHz | | 200 | | 1000 | mV |
| $V_{IN2(p-p)}$ | Input Voltage (Peak-To-Peak) | Differential @ 120 MHz | | 100 | | 1000 | mV |
| $f_{SINE}$ | Input Frequency with Sine Wave | $V_{IN}$ = 600 mVp-p | | 30 | | 120 | MHz |
| $f_{TTL}$ | Input Frequency with TTL Input | | | 0 | | 120 | MHz |
| dv | Minimum Slew Rate of Square Wave Input | $V_{IN}$ = 600 mVp-p | | | | 100 | V/μs |
| $V_{OH}$ | Logical "1" Output Voltage | $V_{CC}$ = Min, $I_{OH}$ = −10 μA<br>$V_{CC}$ = Min, $I_{OH}$ = −400 μA<br>$V_{CC}$ = Min, $I_{OH}$ = −1.6 mA | | 2.9<br>2.4<br>2.0 | | | V<br>V<br>V |
| $I_{OS}$ | Output Short-Circuit Current | $V_{CC}$ = Max | | −10 | | −40 | mA |
| $V_{OL}$ | Logical "0" Output Voltage | $V_{CC}$ = Min | $I_{OL}$ = 8 mA DS8629 | | | 0.5 | V |
| $I_{CC}$ | Supply Current | $V_{CC}$ = Max | DS8629 | | 90 | 135 | mA |
| $Z_{IN}$ | Input Impedance | $V_{IN}$ = 0.1 $V_{p-p}$ to 1 $V_{p-p}$<br>Freq. = 120 MHz | | 100 | 200 | 350 | Ω |

**Note 1:** "Absolute Maximum Ratings" are those values beyond which the safety of the device cannot be guaranteed. They are not meant to imply that the device should be operated at these limits. The table of "Electrical Characteristics" provides conditions for actual device operation.

**Note 2:** Unless otherwise specified, min/max limits apply across the 0°C to 70°C range. All typical values are for $T_A$ = 25°C and $V_{CC}$ = 5.2V.

**Note 3:** All currents into device pins shown as positive, out of device pins negative, all voltage referenced to ground unless otherwise noted. All values shown as max or min on absolute value basis.

## Application Hints

### OPERATING NOTES

Two ground and two $V_{CC}$ connections are provided separating the ECL and buffer/amplifier stages from the TTL section, isolating the noise transients inherent in the TTL structure. In most cases, shorting the two grounds externally to a good ground plane and the $V_{CC}$'s to a wide $V_{CC}$ bus will provide sufficient isolation. All components used in the circuit layout should be suitable for the frequencies involved and leads should be kept short to minimize stray inductance. A well by-passed voltage source should be used.

The signal source is usually capacitively coupled to the input. At higher frequencies a 0.01 μF input capacitor (C1) is usually sufficient, with larger values used at the lower frequencies. If the input signal is likely to be interrupted, it may be desirable to connect a 100 kΩ resistor between one input and ground to stabilize the device. In the single-ended mode, it is preferable to connect the resistor to the unused input. In the differential mode, the resistor can be connected to either input. The addition of the 100 kΩ pull-down resistor causes a loss of input sensitivity, but prevents circuit oscillations under no signal (open circuit) conditions. In addition, in the single ended mode, a capacitor of 0.01 μF (C2) should be connected between the unused input and the ground plane to provide a good high frequency bypass. The capacitor should be made larger for lower frequencies.

The input waveform may be sinusoidal, but below about 30 MHz the operation of the circuit becomes dependent on the slew rate of the input rather than amplitude. A square wave input with a slew rate of greater than 100 V/μs will permit correct operation down to lower frequencies, provided the proper input coupling capacitor is provided. If it is desired to use a TTL input signal source, the unused input should have a 10 kΩ resistor added to ground and the input coupling capacitor should be eliminated with the TTL source dc coupled to the input.

The device can be used in phase-locked loop applications such as FM radio or other communications bands to prescale the input frequency down to a more usable level. A digital frequency display system can also be derived separately or in conjunction with a phase-locked loop, and it can extend the useful range of many inexpensive frequency counters to 160 MHz (typically).

**Input Configuration**

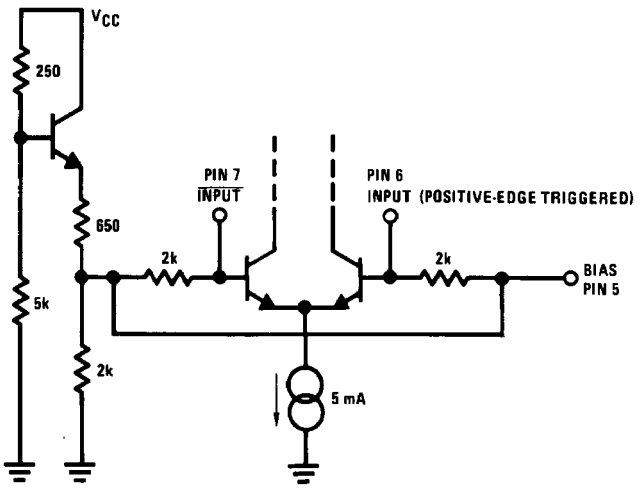


TL/F/7539–4

**Output Configuration**

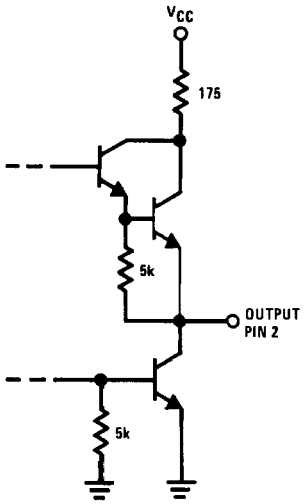


TL/F/7539–5