查询ESI-4AGL1.842G01供应商 捷多邦，专业PCB打样工厂，24小时加急出货

4mm SQUARE THIN TYPE ISOLATOR

MODEL ESI-4AG [ ] 1.842 G 01 - T

(1) (2) (3) (4) (5) (6)

(1) Series ESI-4AG ; 1.6 +/-0.1mm Height
(2) Rotating Direction (R or L)
(3) Center Frequency
(4) G ; GHz
(5) Control No.
(6) T ; Taping
Blank ; Bulk

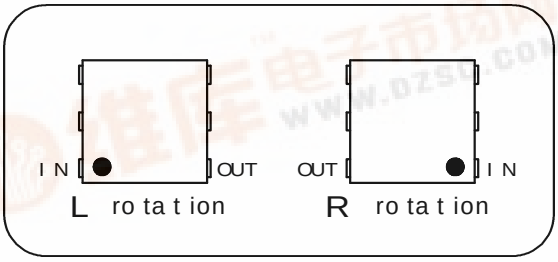

Specification

Frequency (GHz)	Ins. Loss Max. (dB)	Isolation Min. (dB)	V.S.W.R. Max.	Attenuation at 2f Min. (dB)	Attenuation at 3f Min. (dB)	Handling Power Max. (W)	Reflection Power Max. (W)
1.805-1.880	0.55	13	1.5	13	15	5.0	1.0

Operating Temperature(deg.C) ; -35 to +85
Impedance ; 50 ohms Typ.

Shape & Size

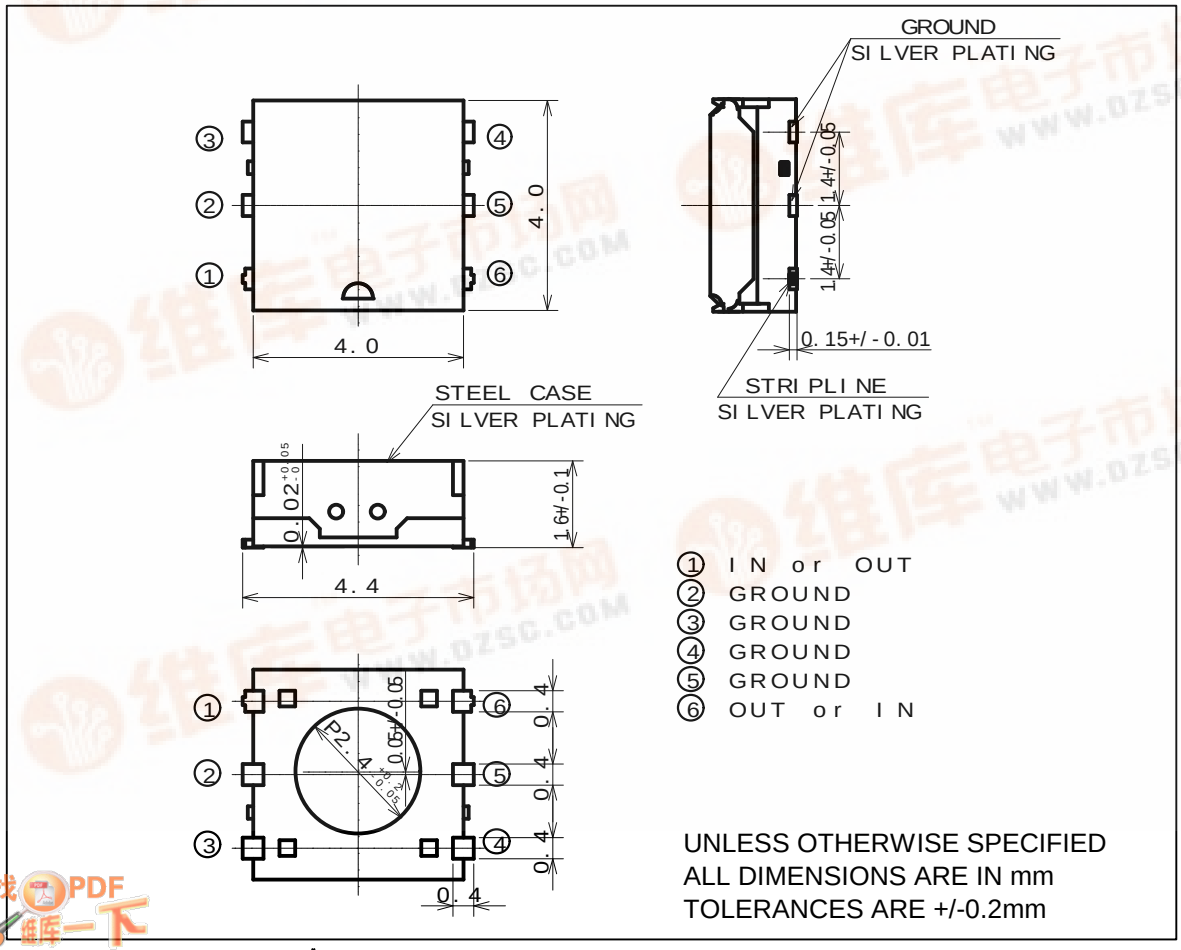

TAE822

找PDF 一下 pdf.dzsc.com