查询E-L6210供应商 捷多邦，专业PCB打样工厂，24小时加急出货

L6210

Dual Schottky diode bridge

Features

- Monolithic array of eight Schottky diodes
- High efficiency
- 4 A peak current
- Low forward voltage
- Fast recovery
- Time two separated diode bridges

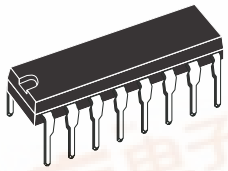

PDIP 16

Description

The L6210 is a monolithic IC containing eight Schottky diodes arranged as two separated diode bridges.

This diodes connection makes this device versatile in many applications.

They are used particular in bipolar stepper motor applications, where high efficient operation, due to low forward voltage drop and fast reverse recovery time, are required.

The L6210 is available in a 16 pin powerdip package (12 + 2 + 2) designed for the 0 to 70°C ambient temperature range.

Table 1. Device summary

Order code	Package	Packing
E-L6210	PDIP 16	Tube

找PDF 维库一下 pdf.dzsc.com

Contents

1 Block and pin connection diagram 3

2 Electrical specifications 4

2.1 Absolute maximum ratings 4

2.2 Thermal data 4

2.3 Electrical characteristics 4

3 Mounting instructions 5

4 Package information 6

5 Revision history 7

1 Block and pin connection diagram

Figure 1. Block diagram

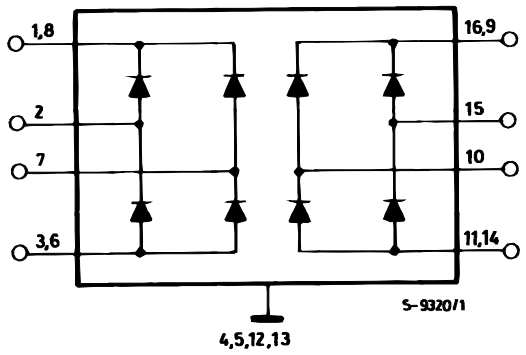

Figure 2. Pin connection (top view)

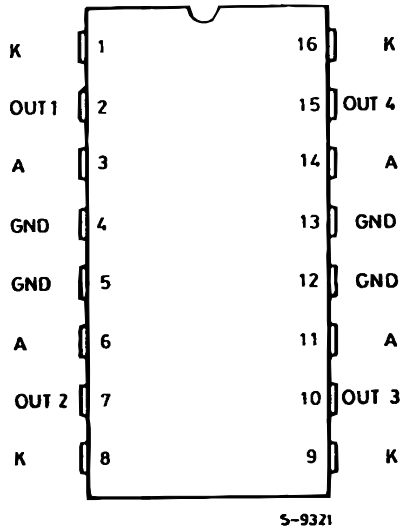

2 Electrical specifications

2.1 Absolute maximum ratings

Table 2. Absolute maximum ratings

Symbol	Parameter	Value	Unit
I_F	Repetitive Forward Current Peak	2	A
V_R	Peak Reverse Voltage (per diode)	50	V
T_{AMB}	Operating Ambient Temperature	70	°C
T_{STG}	Storage Temperature Range	–55 to +150	°C

2.2 Thermal data

Table 3. Thermal data

Symbol	Parameter	Min.	Typ.	Max.	Unit
$R_{TH\ J\text{-}CASE}$	Thermal Impedance Junction-case			14	°C/W
$R_{TH\ J\text{-}AMB}$	Thermal Impedance Junction-ambient without External Heatsink			65	°C/W

2.3 Electrical characteristics

Table 4. Electrical characteristics
(T_J = 25°C unless otherwise specified)

Symbol	Parameter	Test conditions	Min.	Typ.	Max.	Unit
V_F	Forward Voltage Drop	I_F = 100 mA		0.65	0.8	V
		I_F = 500 mA		0.8	1	V
		I_F = 1 A		1	1.2	V
I_L	Leakage Current	V_R = 40 V, T_{AMB} = 25 °C			1	mA

Note: At forward currents of greater than 1 A, a parasitic current of approximately 10 mA may be collected by adiacent diodes.

3 Mounting instructions

The $R_{th\ j\text{-}am}$b of the L6210 can be reduced by soldering the GND pins to suitable copper area of the printed circuit boards as shown in *Figure 3* or to an external heatsink (*Figure 4*). During soldering the pin temperature must not exceed 260°C and the soldering time must not be longer then 12 s. The external heatsink or printed circuit copper area must be connected to electrical ground.

Figure 3. Example of PC board copper area which is used as heatsink

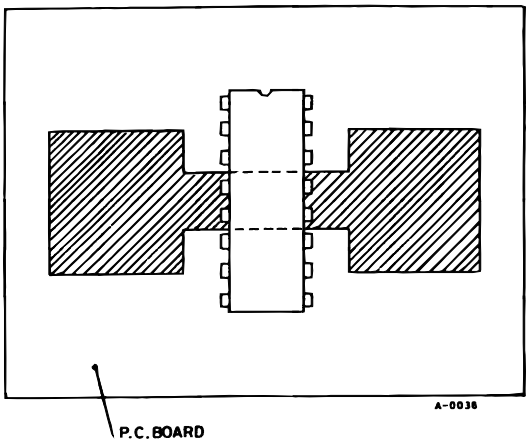

Figure 4. Example of an external heatsink

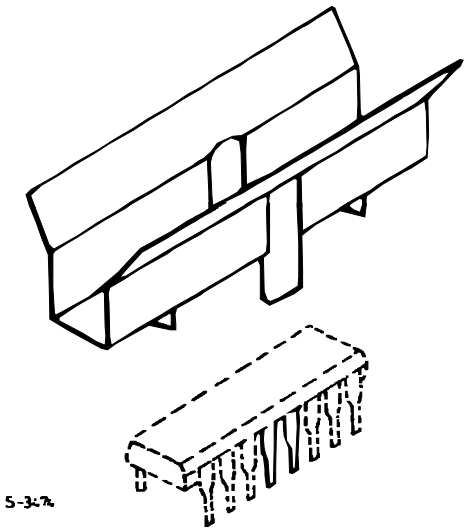

4 Package information

In order to meet environmental requirements, ST (also) offers these devices in ECOPACK® packages. ECOPACK® packages are lead-free. The category of second Level Interconnect is marked on the package and on the inner box label, in compliance with JEDEC Standard JESD97. The maximum ratings related to soldering conditions are also marked on the inner box label.

ECOPACK is an ST trademark. ECOPACK specifications are available at: www.st.com.

Figure 5. PDIP 16 mechanical data and package dimensions

DIM.	mm			inch		
	MIN.	TYP.	MAX.	MIN.	TYP.	MAX.
A			5.330			0.2098
A1	0.380			0.0150		
A2	2.920	3.300	4.950	0.1150	0.1299	0.1949
b	0.360	0.460	0.560	0.0142	0.0181	0.0220
b2	1.140	1.520	1.780	0.0449	0.0598	0.0701
c	0.200	0.250	0.360	0.0079	0.0098	0.0142
D(*)	18.670	19.180	19.690	0.7350	0.7551	0.7752
E	7.620	7.870	8.260	0.3000	0.3098	0.3252
E1(*)	6.100	6.350	7.110	0.2402	0.2500	0.2799
e		2.540			0.1000	
e1		17.780			0.7000	
eA		7.620			0.3000	
eB			10.920			0.4299
L	2.920	3.300	3.810	0.1150	0.1299	0.1500

(*)"D" and "E1" dimensions do not include mold flash or protusions. Mold flash or protusions shall not exceed 0.25mm.

OUTLINE AND MECHANICAL DATA

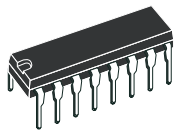

PDIP 16

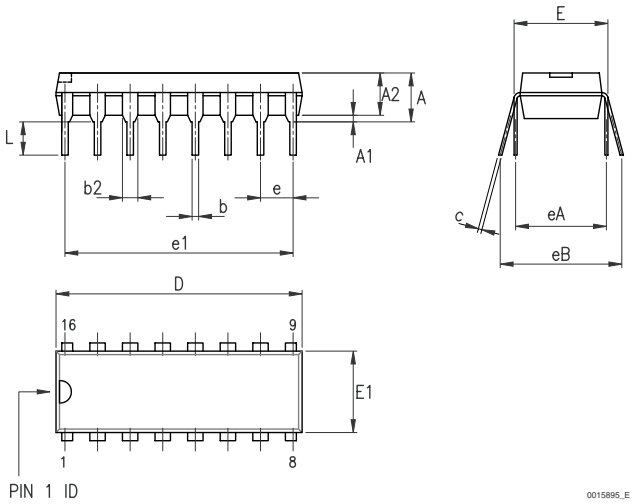

0015895 E

5 Revision history

Table 5. Document revision history

Date	Revision	Changes
31-Jul-2003	1	Initial release.
23-Apr-2008	2	Package information updated.

Please Read Carefully:

Information in this document is provided solely in connection with ST products. STMicroelectronics NV and its subsidiaries (“ST”) reserve the right to make changes, corrections, modifications or improvements, to this document, and the products and services described herein at any time, without notice.

All ST products are sold pursuant to ST’s terms and conditions of sale.

Purchasers are solely responsible for the choice, selection and use of the ST products and services described herein, and ST assumes no liability whatsoever relating to the choice, selection or use of the ST products and services described herein.

No license, express or implied, by estoppel or otherwise, to any intellectual property rights is granted under this document. If any part of this document refers to any third party products or services it shall not be deemed a license grant by ST for the use of such third party products or services, or any intellectual property contained therein or considered as a warranty covering the use in any manner whatsoever of such third party products or services or any intellectual property contained therein.

UNLESS OTHERWISE SET FORTH IN ST’S TERMS AND CONDITIONS OF SALE ST DISCLAIMS ANY EXPRESS OR IMPLIED WARRANTY WITH RESPECT TO THE USE AND/OR SALE OF ST PRODUCTS INCLUDING WITHOUT LIMITATION IMPLIED WARRANTIES OF MERCHANTABILITY, FITNESS FOR A PARTICULAR PURPOSE (AND THEIR EQUIVALENTS UNDER THE LAWS OF ANY JURISDICTION), OR INFRINGEMENT OF ANY PATENT, COPYRIGHT OR OTHER INTELLECTUAL PROPERTY RIGHT.

UNLESS EXPRESSLY APPROVED IN WRITING BY AN AUTHORIZED ST REPRESENTATIVE, ST PRODUCTS ARE NOT RECOMMENDED, AUTHORIZED OR WARRANTED FOR USE IN MILITARY, AIR CRAFT, SPACE, LIFE SAVING, OR LIFE SUSTAINING APPLICATIONS, NOR IN PRODUCTS OR SYSTEMS WHERE FAILURE OR MALFUNCTION MAY RESULT IN PERSONAL INJURY, DEATH, OR SEVERE PROPERTY OR ENVIRONMENTAL DAMAGE. ST PRODUCTS WHICH ARE NOT SPECIFIED AS "AUTOMOTIVE GRADE" MAY ONLY BE USED IN AUTOMOTIVE APPLICATIONS AT USER’S OWN RISK.

Resale of ST products with provisions different from the statements and/or technical features set forth in this document shall immediately void any warranty granted by ST for the ST product or service described herein and shall not create or extend in any manner whatsoever, any liability of ST.

ST and the ST logo are trademarks or registered trademarks of ST in various countries.

Information in this document supersedes and replaces all information previously supplied.

The ST logo is a registered trademark of STMicroelectronics. All other names are the property of their respective owners.

© 2008 STMicroelectronics - All rights reserved

STMicroelectronics group of companies

Australia - Belgium - Brazil - Canada - China - Czech Republic - Finland - France - Germany - Hong Kong - India - Israel - Italy - Japan - Malaysia - Malta - Morocco - Singapore - Spain - Sweden - Switzerland - United Kingdom - United States of America

www.st.com