查询FLL300IL-1供应商 捷多邦，专业PCB打样工厂，24小时加急出货

FLL300IL-1, FLL300IL-2, FLL300IL-3

L-Band Medium & High Power GaAs FET

FEATURES

- High Output Power: P_{1dB} = 44.5dBm (Typ.)
- High Gain: G_{1dB} = 12.0dB (Typ.)@1.8GHz (FLL300IL-2)
- High PAE: η_{add} = 44% (Typ.)
- Proven Reliability
- Hermetically Sealed Package

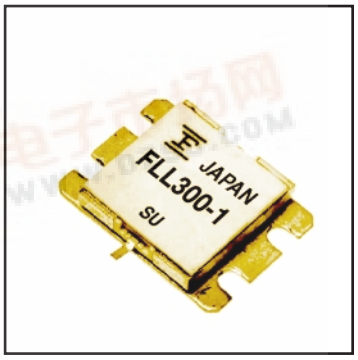

DESCRIPTION

The FLL300IL-1, FLL300IL-2, FLL300IL-3 are Power GaAs FETs that are specifically designed to provide high power at L-Band frequencies with gain, linearity and efficiency superior to that of silicon devices. The performance in multitone environments for Class AB operation make them ideally suited for base station applications.

Fujitsu's stringent Quality Assurance Program assures the highest reliability and consistent performance.

ABSOLUTE MAXIMUM RATING (Ambient Temperature Ta=25°C)

Item	Symbol	Condition	Rating	Unit
Drain-Source Voltage	V_{DS}		15	V
Gate-Source Voltage	V_{GS}		-5	V
Total Power Dissipation	P_T	T_c = 25°C	100	W
Storage Temperature	T_{stg}		-65 to +175	°C
Channel Temperature	T_{ch}		175	°C

Fujitsu recommends the following conditions for the reliable operation of GaAs FETs:

1. The drain-source operating voltage (V_{DS}) should not exceed 10 volts.
2. The forward and reverse gate currents should not exceed 80.4 and -17.4 mA respectively with gate resistance of 25Ω.
3. The operating channel temperature (T_{ch}) should not exceed 145°C.

ELECTRICAL CHARACTERISTICS (Ambient Temperature Ta=25°C)

Item		Symbol	Test Conditions*		Limit Min.	Limit Typ.	Limit Max.	Unit
Saturated Drain Current		I_{DSS}	V_{DS} = 5V, V_{GS} = 0V		-	12	16	A
Transconductance		g_m	V_{DS} = 5V, I_{DS} = 7200mA		-	6000	-	mS
Pinch-off Voltage		V_p	V_{DS} = 5V, I_{DS} = 720mA		-1.0	-2.0	-3.5	V
Gate Source Breakdown Voltage		V_{GSO}	I_{GS} = -720μA		-5	-	-	V
Output Power at 1dB G.C.P.	FLL300IL-1	P_{1dB}	V_{DS} = 10V, I_{DS} = 0.5 I_{DSS} (Typ.)	f=900MHz	43.0	44.5	-	dBm
	FLL300IL-2			f=1.8GHz				
	FLL300IL-3			f=2.6GHz				
Power Gain at 1dB G.C.P.	FLL300IL-1	G_{1dB}		f=900MHz	11.0	13.0	-	dB
	FLL300IL-2			f=1.8GHz	10.0	12.0	-	dB
	FLL300IL-3			f=2.6GHz	8.0	10.0	-	dB
Drain Current		I_{dsr}	V_{DS} = 10V, I_{DS} = 0.5 I_{DSS} (Typ.)		-	6.0	8.0	A
Power added Efficiency		η_{add}			-	44	-	%
Thermal Resistance		R_{th}	Channel to Case		-	1.1	1.5	°C/W
Channel Temperature Rise		ΔT_{ch}	(10V x I_{dsr} - P_{out} + P_{in}) x R_{th}		-	-	80	°C

CASE STYLE: IL

G.C.P.: Gain Compression Point

* Under fixed VGS bias condition

FUJITSU

找PDF 维库一下 pdf.dzsc.com

POWER DERATING CURVE

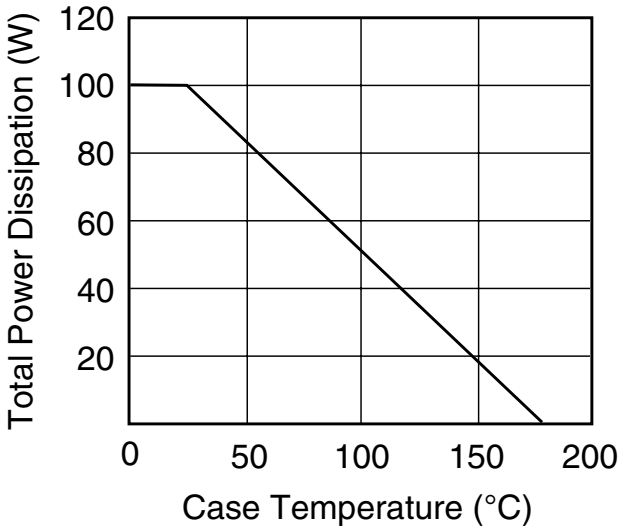

DRAIN CURRENT vs. DRAIN-SOURCE VOLTAGE

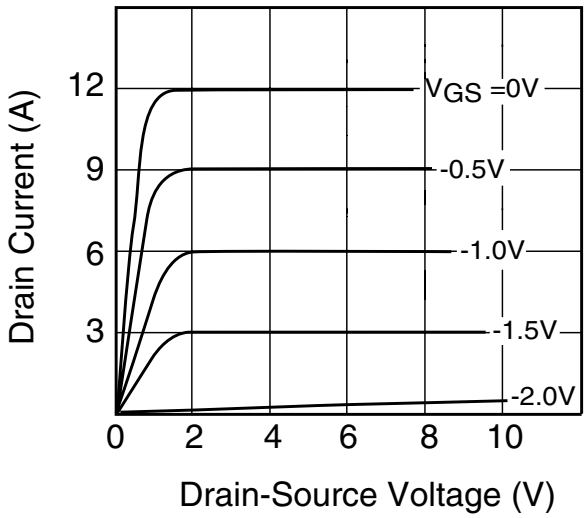

FLL300IL-1

L-Band Medium & High Power GaAs FET

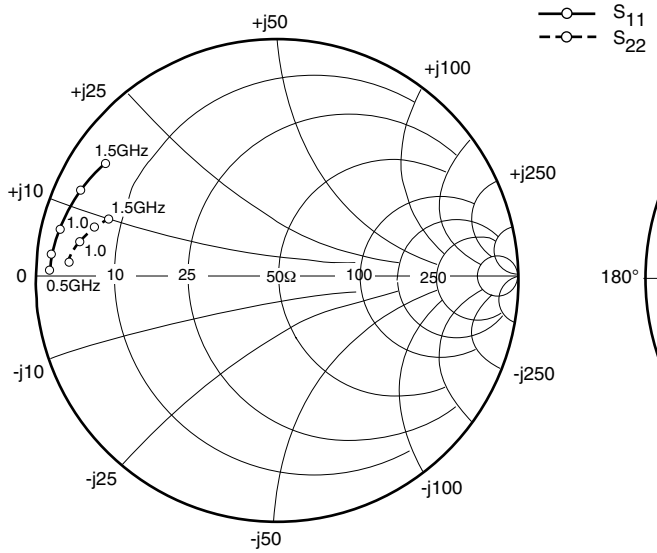

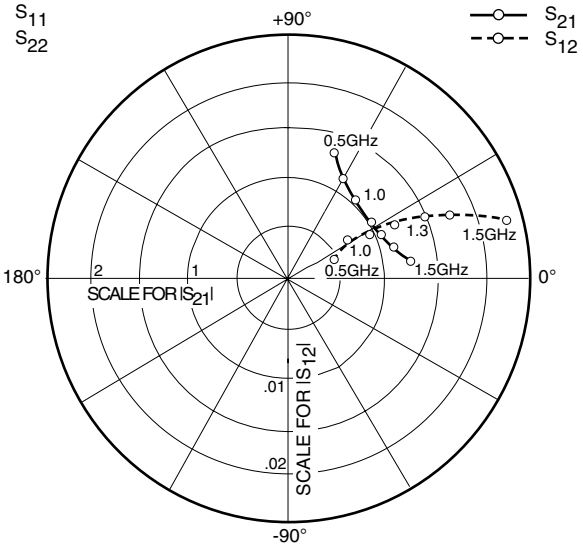

S-PARAMETERS

V_{DS} = 10V, I_{DS} = 6000mA

FREQUENCY	S11		S21		S12		S22	
(MHZ)	MAG	ANG	MAG	ANG	MAG	ANG	MAG	ANG
500	.961	176.7	1.318	70.0	.005	26.1	.889	174.0
600	.957	174.7	1.162	64.9	.005	26.6	.884	173.0
700	.956	172.5	1.053	59.9	.006	33.0	.880	171.7
800	.955	170.6	.989	55.1	.007	32.2	.871	170.5
900	.948	168.2	.951	49.6	.008	28.6	.865	169.5
1000	.943	166.0	.944	44.5	.009	25.7	.855	167.7
1100	.933	161.9	.952	37.9	.010	32.6	.841	167.0
1200	.923	158.8	.975	31.7	.012	25.2	.828	165.1
1300	.910	155.1	1.021	24.7	.015	23.1	.810	163.3
1400	.898	151.0	1.094	16.8	.017	19.7	.789	161.1
1500	.875	145.8	1.182	8.4	.023	15.1	.760	158.9

OUTPUT POWER vs. INPUT POWER

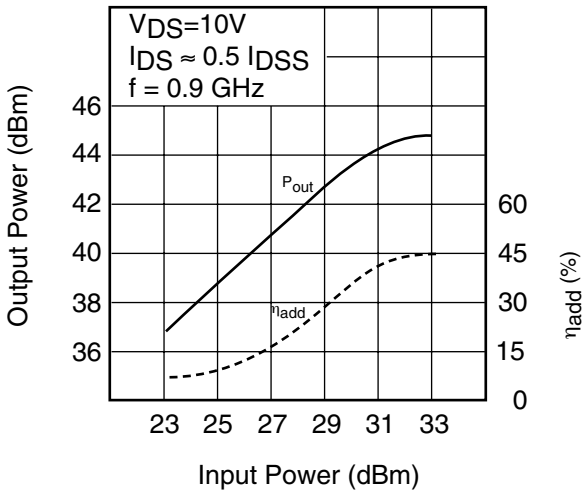

FUJITSU

FLL300IL-2

L-Band Medium & High Power GaAs FET

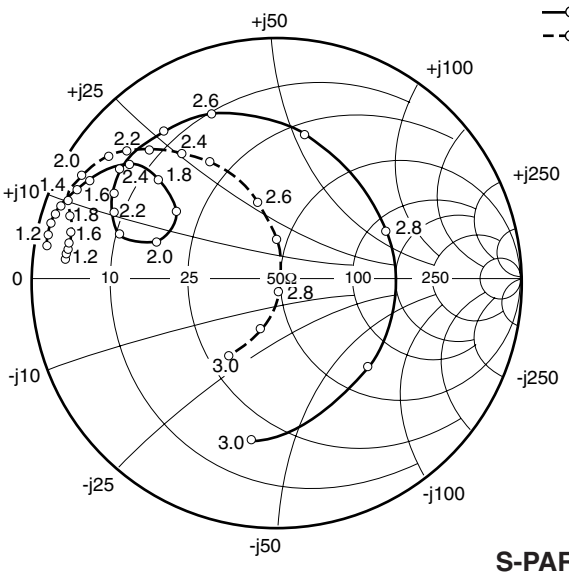

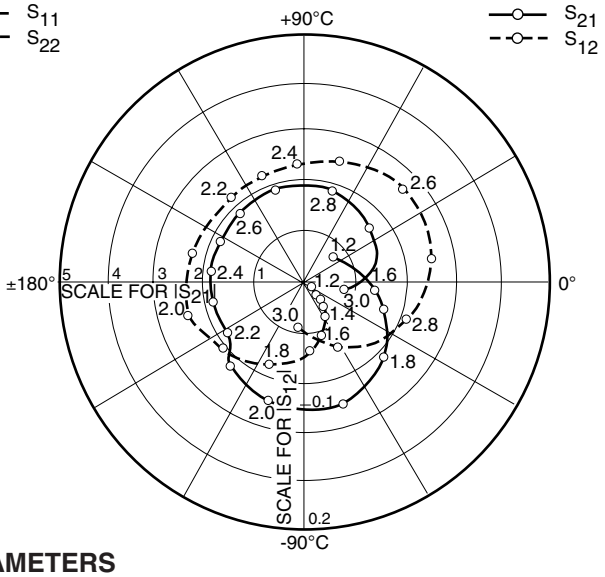

S-PARAMETERS

V_{DS} = 10V, I_{DS} = 6000mA

FREQUENCY	S11		S21		S12		S22	
(MHZ)	MAG	ANG	MAG	ANG	MAG	ANG	MAG	ANG
1000	.953	167.2	.788	34.0	.003	-32.3	.869	169.9
1100	.944	164.6	.811	28.0	.005	-31.6	.864	169.0
1200	.933	161.0	.882	21.5	.006	-50.9	.859	167.9
1300	.923	157.3	.997	14.0	.007	-50.6	.857	166.2
1400	.903	153.3	1.169	5.3	.008	-60.5	.850	165.2
1500	.864	148.3	1.419	-6.9	.010	-71.2	.853	164.7
1600	.788	142.2	1.752	-23.0	.014	-86.6	.868	162.7
1700	.654	137.8	2.179	-45.3	.018	-109.7	.889	160.0
1800	.506	144.5	2.526	-74.2	.023	-136.9	.923	155.3
1900	.522	161.1	2.523	-104.9	.024	-167.7	.907	148.1
2000	.652	162.2	2.249	-131.4	.022	165.4	.852	141.8
2100	.716	154.3	1.946	-149.5	.021	148.1	.789	136.7
2200	.746	150.0	1.984	-167.8	.023	129.7	.730	130.5
2300	.771	139.4	1.902	171.9	.022	110.3	.644	124.2
2400	.763	125.1	1.887	152.6	.023	91.3	.555	117.9
2500	.722	106.2	1.935	133.4	.025	71.1	.460	113.5
2600	.626	75.9	1.998	106.5	.027	41.9	.323	103.1
2700	.508	23.4	1.932	73.3	.026	9.1	.161	89.3
2800	.544	-45.8	1.613	36.7	.021	-25.1	.031	-62.8
2900	.686	-94.8	1.136	3.4	.016	-63.2	.210	-105.9
3000	.791	-123.6	.726	-22.0	.010	-90.8	.370	-118.5

OUTPUT POWER vs. INPUT POWER

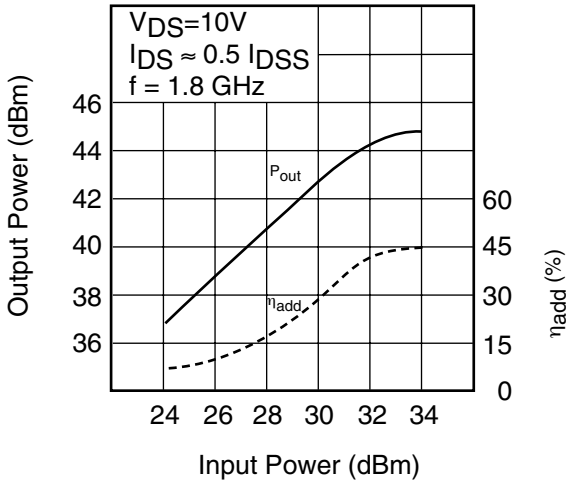

FUJITSU

FLL300IL-3

L-Band Medium & High Power GaAs FET

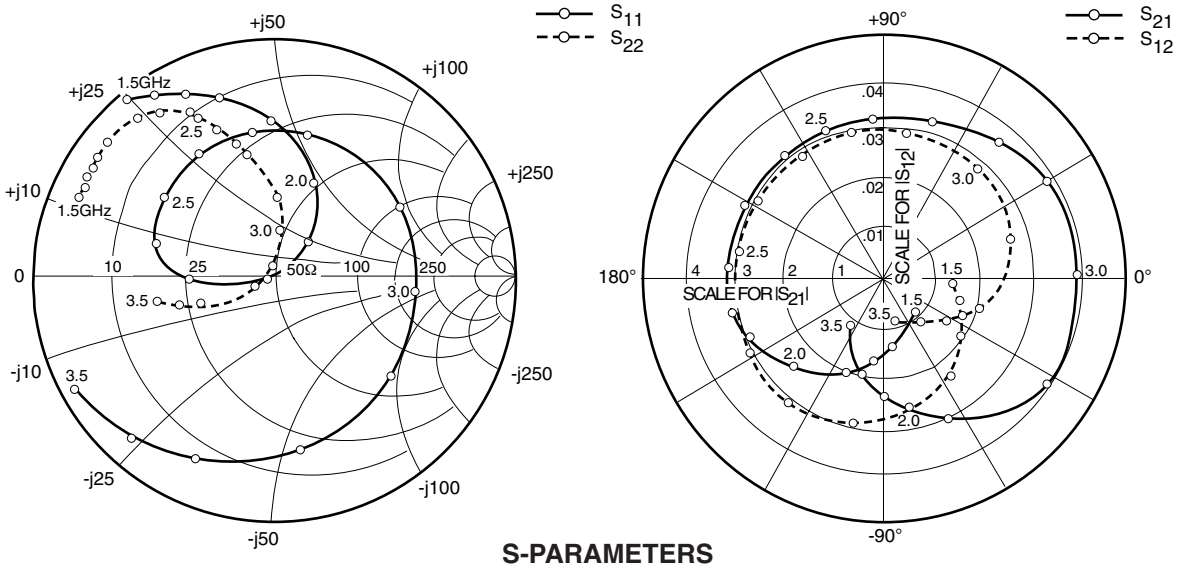

S-PARAMETERS

V_{DS} = 10V, I_{DS} = 6000mA

FREQUENCY	S11		S21		S12		S22	
(MHZ)	MAG	ANG	MAG	ANG	MAG	ANG	MAG	ANG
1500	.902	130.6	1.169	-3.1	.009	-55.7	.854	155.0
1600	.872	123.3	1.324	-13.4	.010	-69.8	.852	153.2
1700	.829	114.2	1.539	-25.8	.012	-81.5	.847	150.7
1800	.756	102.9	1.824	-40.5	.016	-96.1	.847	148.5
1900	.645	88.8	2.199	-57.7	.019	-113.4	.854	146.1
2000	.463	71.7	2.604	-78.8	.024	-134.7	.860	142.2
2100	.217	54.5	2.939	-103.5	.028	-160.3	.867	137.4
2200	.065	173.9	3.080	-129.4	.031	173.7	.848	131.6
2300	.285	175.2	3.055	-153.9	.032	150.2	.808	125.3
2400	.441	157.4	2.938	-176.2	.032	128.8	.752	119.7
2500	.523	137.6	2.843	166.5	.032	110.8	.700	119.6
2600	.560	119.7	2.768	146.9	.033	91.6	.628	113.6
2700	.583	99.3	2.791	126.7	.035	72.2	.550	109.0
2800	.578	72.8	2.840	104.2	.036	49.8	.461	102.5
2900	.564	37.9	2.854	79.1	.039	28.0	.348	94.4
3000	.564	-4.7	2.789	51.3	.039	0.5	.208	91.8
3100	.605	-44.2	2.536	20.3	.039	-33.2	.081	125.9
3200	.731	-80.2	1.981	-9.0	.031	-63.6	.132	-167.4
3300	.813	-109.5	1.502	-32.7	.023	-88.0	.253	-158.6
3400	.864	-131.0	1.130	-52.7	.019	-106.9	.345	-162.2
3500	.895	-147.1	.853	-69.8	.013	-121.2	.408	-168.1

OUTPUT POWER vs. INPUT POWER

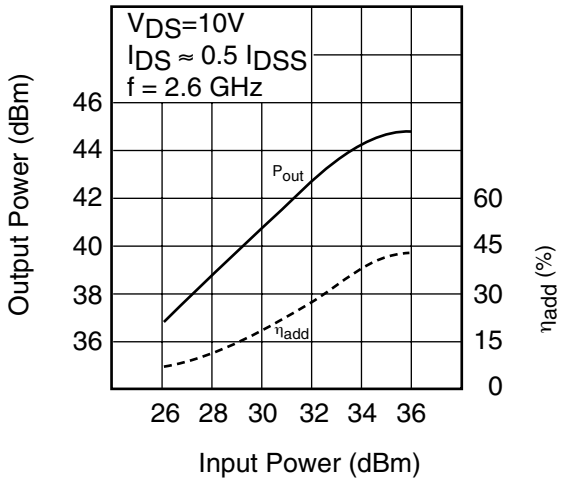

FUJITSU

FLL300IL-1, FLL300IL-2, FLL300IL-3

L-Band Medium & High Power GaAs FET

Case Style "IL"

Metal-Ceramic Hermetic Package

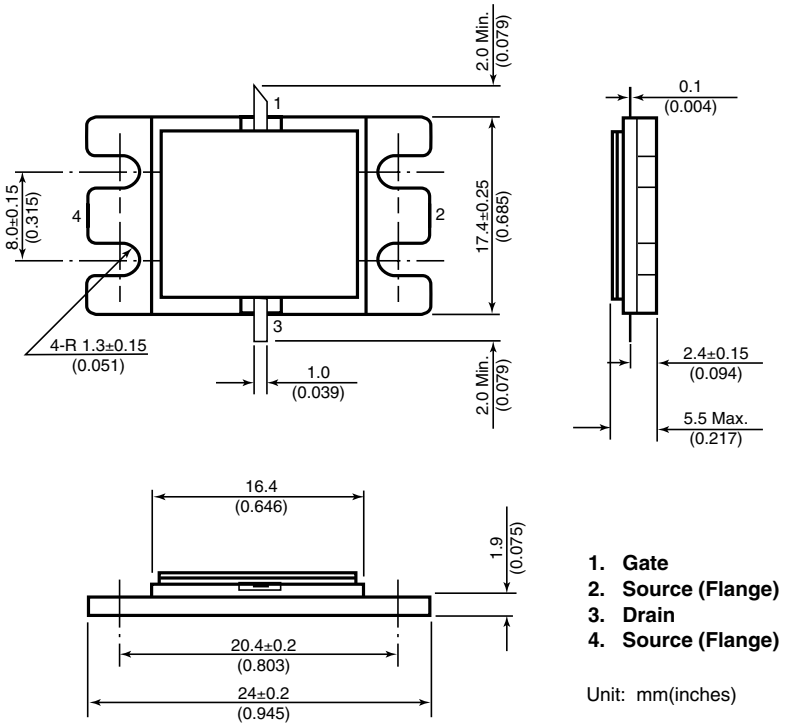

1. **Gate**
2. **Source (Flange)**
3. **Drain**
4. **Source (Flange)**

Unit: mm(inches)

For further information please contact:

FUJITSU COMPOUND SEMICONDUCTOR, INC.
2355 Zanker Rd.
San Jose, CA 95131-1138, U.S.A.
Phone: (408) 232-9500
FAX: (408) 428-9111
www.fcsi.fujitsu.com

FUJITSU MICROELECTRONICS, LTD.
Compound Semiconductor Division
Network House
Norreys Drive
Maidenhead, Berkshire SL6 4FJ
Phone:+44 (0)1628 504800
FAX:+44 (0)1628 504888

CAUTION

Fujitsu Compound Semiconductor Products contain **gallium arsenide (GaAs)** which can be hazardous to the human body and the environment. For safety, observe the following procedures:

- **Do not put these products into the mouth.**
- **Do not alter the form of this product into a gas, powder, or liquid through burning, crushing, or chemical processing as these by-products are dangerous to the human body if inhaled, ingested, or swallowed.**
- **Observe government laws and company regulations when discarding this product. This product must be discarded in accordance with methods specified by applicable hazardous waste procedures.**

Fujitsu Limited reserves the right to change products and specifications without notice.
The information does not convey any license under rights of Fujitsu Limited or others.

© 1998 FUJITSU COMPOUND SEMICONDUCTOR, INC.

Printed in U.S.A. FCSI0598M200

FUJITSU