查询GM6155-AST25R供应商 捷多邦，专业PCB打样工厂，24小时加急出货

GM6155
150mA LOW - NOISE LDO REGULATOR

Power Management

Description

The GM6155 is an efficient linear voltage regulator with ultralow - noise output, very low dropout voltage (typically 17mV at light loads and 100mV at 50mA), and very low ground current (600µA at 100mA output). The GM6155 provides better than 1% initial accuracy.

Designed especially for hand-held, battery-powered devices, the GM6155 includes a CMOS or TTL compatible enable/ shutdown control input. When shutdown, power consumption drops nearly to zero. Regulator ground current increases only slightly in dropout, further prolonging battery life. Key GM6155 features include a reference bypass pin to improve its already excellent low-noise performance, reversed-battery protection, current limiting, and overtemperature shutdown.

The GM6155 is available in SOT-25 package.

Features

- Very low noise output
- Extremely accurate output voltage
- Guaranteed 150mA output
- Low quiescent current
- Low dropout voltage
- Extremely tight load and line regulation
- Very low temperature coefficient
- Current and thermal limiting
- Reverse-battery protection
- "Zero" off-mode current
- Logic-controlled electronic enable

Application

Cellular telephones

Laptop, notebook, and palmtop computers

Battery-powered equipment

PCMCIA V_{CC} and V_{PP} regulation/ switching

Consumer/ personal electronics

SMPS post-regulator/ dc-to-dc modules

High-efficiency linear power supplies

TYPICAL APPLICATION CIRCUITS

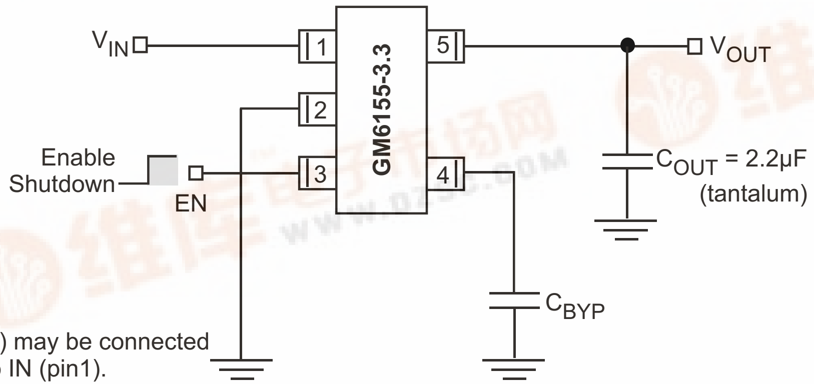

EN (pin 3) may be connected directly to IN (pin1).

Low-Noise Operation:
C_{BYP} = 470pF, $C_{OUT} \geq$ 2.2µF

Basic Operation:
C_{BYP} = not used, $C_{OUT} \geq$ 1µF

Revision 1, Feb. 2004

GM6155

pdf.dzsc.com

PRELIMINARY

◆ MARKING INFORMATION & PIN CONFIGURATIONS (TOP VIEW)

SOT-25 (SOT-23-5)

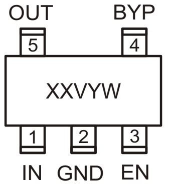

Fixed Voltages

SOT-25 (SOT-23-5)

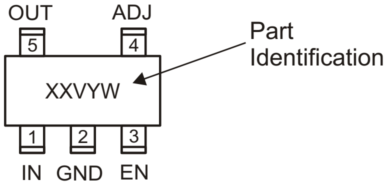

Adjustable Voltage

XX = Specific Device Code(**DA** = GM6155)
V = Voltage Code
Y = Year
W = Work Week

◆ ORDERING INFORMATION

Ordering Number	Output Voltage	Voltage Code	Package	Shipping
GM6155-AST25R	Adj	A	SOT-25	3,000 Units/ Tape & Reel
GM6155-2.5ST25R	2.5V	G	SOT-25	3,000 Units/ Tape & Reel
GM6155-2.7ST25R	2.7V	T	SOT-25	3,000 Units/ Tape & Reel
GM6155-2.8ST25R	2.8V	H	SOT-25	3,000 Units/ Tape & Reel
GM6155-2.9ST25R	2.9V	X	SOT-25	3,000 Units/ Tape & Reel
GM6155-3.0ST25R	3.0V	J	SOT-25	3,000 Units/ Tape & Reel
GM6155-3.3ST25R	3.3V	K	SOT-25	3,000 Units/ Tape & Reel
GM6155-3.6ST25R	3.6V	L	SOT-25	3,000 Units/ Tape & Reel
GM6155-4.0ST25R	4.0V	M	SOT-25	3,000 Units/ Tape & Reel
GM6155-4.2ST25R	4.2V	Y	SOT-25	3,000 Units/ Tape & Reel
GM6155-5.0ST25R	5.0V	Q	SOT-25	3,000 Units/ Tape & Reel

* For detail Ordering Number identification, please see last page.

◆ PIN DESCRIPTION

Pin Number	Pin Name	Function
1	IN	Supply Input
2	GND	Ground
3	EN	Enable/ Shutdown(Input): COMS compatible input. Logic high = enable, logic low or open = shutdown.
4	BYP	Reference Bypass: Connect external 470pF capacitor to GND to reduce output noise. May be left open.
5	OUT	Regulator Output

◆ BLOCK DIAGRAM

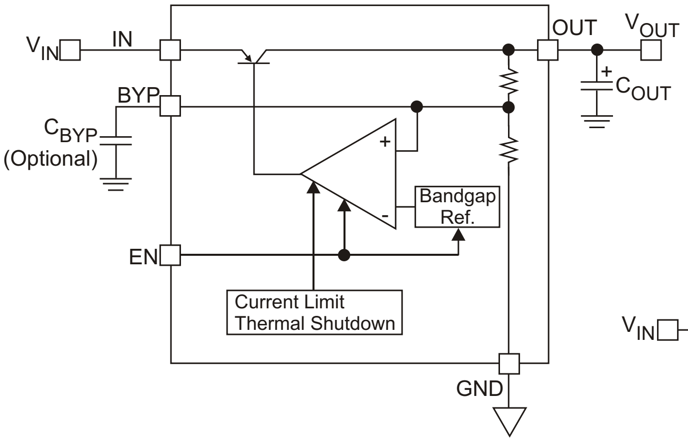
V_{IN}
IN
BYP
C_{BYP}
(Optional)
OUT
V_{OUT}
C_{OUT}
+
-
Bandgap Ref.
EN
Current Limit
Thermal Shutdown
GND

Figure 1. Ultra-Low-Noise Fixed Regulator

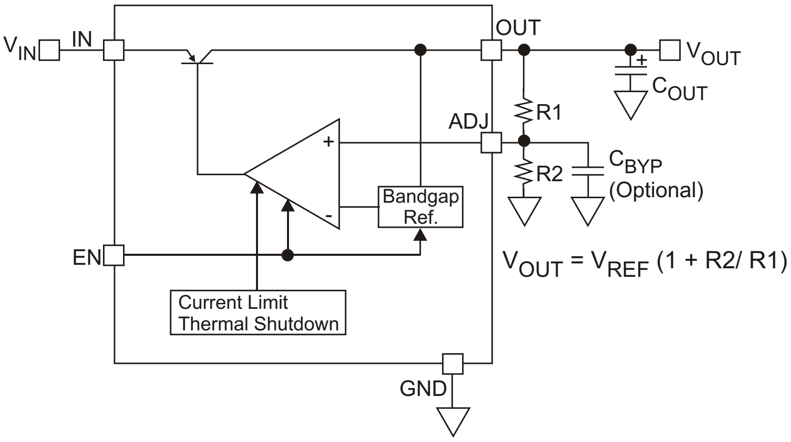
V_{IN}
IN
OUT
V_{OUT}
C_{OUT}
R1
ADJ
R2
C_{BYP}
(Optional)
+
-
Bandgap Ref.
EN
Current Limit
Thermal Shutdown
GND
$V_{OUT} = V_{REF}$ (1 + R2/ R1)

Figure 2. Ultra-Low-Noise Adjustable Regulator

◆ ABSOLUTE MAXIMUM RATINGS

PARAMETER	SYMBOL	RATINGS	UNITS
Supply Input Voltage	V_{IN}	-20 ~ + 20	V
Enable Input Voltage	V_{EN}	-20 ~ +20	V
Power Dissipation (Note 3)	P_D	Internally Limited	W
Junction Temperature	T_J	-40 ~ +125	°C
Lead Temperature (soldering, 5 seconds)	T_{LEAD}	260	°C
Storage Temperature	T_S	-60 ~ +150	°C

◆ OPERATING RATINGS

PARAMETER	SYMBOL	RATINGS	UNITS
Supply Input Voltage	V_{IN}	+2.5 to +16	V
Enable Input Voltage	V_{EN}	0 to V_{IN}	V
Junction Temperature	T_J	-40 ~ + 125	°C
Thermal Resistance	JA	(Note 3)	°C/ W

◆ ELECTRICAL CHARACTERISTICS

($V_{IN} = V_{OUT}$ + 1V; I_L = 100µA; C_L = 1.0µF; $V_{EN} \geq$ 2.0; T_J = 25°C, **bold** values indicate -40°C$\leq$ $T_J \leq$ +125°C; unless otherwise noted)

Parameter	Symbol	Test Condition	Min	Typ	Max	Unit
Output Voltage Accuracy	V_O	Variation from specified V_{OUT}	-1 **-2**		1 **2**	%
Output Voltage Temperature Coefficient	V_O/ T	(Note 4)		**100**		ppm/ °C
Line Regulation	V_O/ V_O	$V_{IN} = V_{OUT}$ + 1V to 16V		0.004	0.012/ **0.05**	%/ V
Load Regulation	V_O/ V_O	I_L = 0.1mA to 150mA, (Note 5)		0.02	0.2/ **0.5**	%/V
Dropout Voltage (Note 6)	V_{IN} - V_O	I_L = 100µA		10	50 **70**	mV
		I_L = 50mA		110	150 **230**	
		I_L = 100mA		140	250 **300**	
		I_L = 150mA		165	275 **350**	
Quiescent Current	I_{GND}	$V_{EN} \leq$ 0.4V (shutdown)		0.01	1	µA
		$V_{EN} \leq$ 0.18V (shutdown)			**5**	
Ground Pin Current (Note 7)	I_{GND}	$V_{EN} \geq$ 2.0V, I_L = 0.1mA		80	125 **150**	µA
		I_L = 50mA		350	600 **800**	
		I_L = 100mA		600	1000 **1500**	
		I_L = 150mA		1300	1900 **2500**	
Ripple Rejection	PSRR	f = 100Hz, I_L = 0.1mA		75		dB
Current Limit	I_{LIMT}	V_{OUT} = 0V		**320**	500	mA
Thermal Regulation	V_O/ P_D	(Note 8)		0.05		%/ W
Output Noise	e_{NO}	I_L = 50mA, C_L = 2.2µF, 470pF from BYP to GND		260		nV/$\sqrt{Hz}$
ENABLE Input						
Enable Input Logic-Low Voltage	V_{IL}	Regulator shutdown			0.4 **0.18**	V
Enable Input Logic-High Voltage	V_{IH}	Regulator enabled	**2.0**			V
Enable Input Current	I_{IL}	$V_{IL} \leq$ 0.4V $V_{IL} \leq$ 0.18V		0.01	-1 **-2**	µA
	I_{IH}	$V_{IH} \leq$ 2.0V	2	5	20 **25**	µA

Note 1. Exceeding the absolute maximum rating may damage the device.

Note 2. The device is not guaranteed to function outside its operating rating.

Note 3: The maximum allowable power dissipation at any T_A (ambient temperature) is P_D(max) = (T_J(max) -T_A) ÷ $_{JA}$. Exceeding the maximum allowable power dissipation will result in excessive die temperature, and the regulator will go into thermal shutdown.

Note 4: Output voltage temperature coefficient is defined as the worst case voltage change divided by the total temperature range.

Note 5: Regulation is measured at constant junction temperature using low duty cycle pulse testing. Parts are tested for load regulation in the load range from 0.1mA to 150mA. Changes in output voltage due to heating effects are covered by the thermal regulation specification.

Note 6: Dropout Voltage is defined as the input to output differential at which the output voltage drops 2% below its nominal value measured at 1V differential.

Note 7: Ground pin current is the regulator quiescent current plus pass transistor base current. The total current drawn from the supply is the sum of the load current plus the ground pin current.

◆ Applications Information

Enable/ Shutdown

Forcing EN (enable/ shutdown) high (>2V) enables the regulator. EN is compatible with CMOS logic gates. If the enable / shutdown feature is not required, connect EN (pin 3) to IN (supply input, pin 1). See Figure 3.

Input Capacitor

A 1µF capacitor should be placed from IN to GND if there is more than 10 inches of wire between the input and the acfilter capacitor or if a battery is used as the input .

Reference Bypass Capacitor

BYP (reference bypass) is connected to the internal voltage reference. A 470pF capacitor (C_{BYP}) connected from BYP to GND quiets this reference, providing a significant reduction in output noise. C_{BYP} reduces the regulator phase margin; when using C_{BYP}, output capacitors of 2.2µF or greater are generally required to maintain stability.

The start-up speed of the GM6155 is inversely proportional to the size of the reference bypass capacitor. Applications requiring a slow ramp-up of output voltage should consider larger values of C_{BYP}. Likewise, if rapid turn-on is necessary, consider omitting C_{BYP}.
If output noise is not a major concern, omit C_{BYP} and leave BYP open.

Output Capacitor

An output capacitor required between OUT and GND to prevent oscillation. The minimum size of the output capacitor is dependent upon whether a reference bypass capacitor is used. 1.0µF minimum is recommended when C_{BYP} is not used (see Figure 2). 2.2µF minimum is recommended when C_{BYP} is 470pF (see Figure 1). Larger values improve the regulator's transient response. The output capacitor value may be increased without limit.

The output capacitor is should have an ESR (effective series resistance) of about 5 or less and a resonant frequency above 1MHz. Ultra-low-ESR capacitors can cause a low amplitude oscillation on the output and/ or underdamped transient response. Most tantalum or aluminum electrolytic capacitors are adequate; film types will work, but are more expensive. Since many aluminum electrolytics have electrolytes that freeze at about -30°C, solid tantalums ate recommended for operation below -25°C.

At lower values for output current, less output capacitance is required for output stability. The capacitor can be reduced to 0.47µF for current below 10mA or 0.33µF for current below 1mA.

No-Load Stability

The GM6155 will remain stable and in regulation with no load (other than the internal voltage divider) unlike many other voltage regulators. This is especially important in CMOS RAM keep-alive applications.

Thermal Considerations

The GM6155 is designed to provide 150mA of continuous current in a very small package. Maximum power dissipation can be calculated based on the output current and the voltage drop across the part. To determine the maximum power dissipation of the package, use the junction-to-ambient thermal resistance of the device and the following basic equation:

$$P_{D(max)} = \frac{(T_{J(max)} - T_A)}{R\ _{JA}}$$

$T_{J(max)}$ is the maximum junction temperature of the die, 125°C, and T_A is the ambient operating temperature. $R\ _{JA}$ is layout dependent; Table 1 shows examples of junction-to-ambient thermal resistance for the GM6155.

Parameter	R_{JA} Recommended Minimum Footprint	R_{JA} 1" Square Copper Clad	R_{JC}
SOT-23-5	220°C/ W	170°C/ W	130°C/ W

Table 1. SOT-25 Thermal Resistance

The actual power dissipation of the regulator circuit can be determined using the equation:

$$P_D = (V_{IN} - V_{OUT})\, I_{OUT} + V_{IN}\, I_{GND}$$

Substituting $P_{D(max)}$ for P_D and solving for the operating conditions that are critical to the application will give the maximum operating conditions for the regulator circuit. For example, when operating the GM6155 at room temperature with a minimum footprint layout, the maximum input voltage for a set output current can be determined as follows:

$$P_{D(max)} = \frac{(125°C - 25°C)}{220°C/W}$$

$$P_{D(max)} = 455mW$$

The junction-to-ambient thermal resistance for the minimum footprint is 220°C/ W, from Table 1. The maximum power dissipation must not be exceeded for proper operation. Using the output voltage of 3.3V and an output current of 150mA, the maximum input voltage can be determined. From the Electrical Characteristics table, the maximum ground current for150mA output current is 2500μA or 2.5mA.

$$455mW = (V_{IN} - 3.3V)\ 150mA + V_{IN} \bullet 2.5mA$$

$$455mW = V_{IN} \bullet 150mA - 495mA + V_{IN} \bullet 2.5mA$$

$$950mW = V_{IN} \bullet 152.5mA$$

$$V_{IN(max)} = 6.23V$$

Therefore, a 3.3V application at 150mA of output current can accept a maximum input voltage of 6.2V in a SOT-25 package. For a full discussion of heat sinking and thermal effects on voltage regulators.

Fixed Regulator Applications

Figure 3. Ultra-Low-Noise Fixed Voltage Application

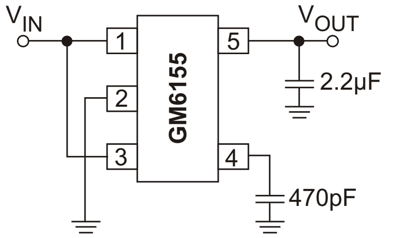

Figure 3. includes a 470pF capacitor for low-noise operation and shows EN (pin 3) connected to IN (pin 1) for an application where enable/ shutdown is not required. C_{OUT} = 2.2μF minimum.

Figure 4. Low-Noise Fixed Voltage Application

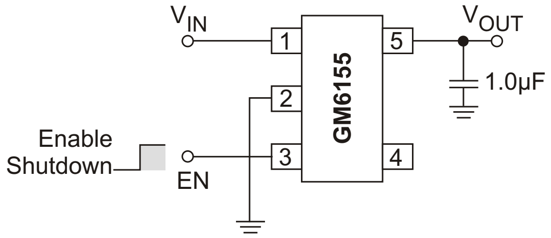

Figure 4. is an example of a low-noise configuration where C_{BYP} is not required. C_{OUT} = 1μF minimum.

Adjustable Regulator Applications

The GM6155 can be adjusted to a specific output voltage by using two externa resistors (Figure 5). The resistors set the output voltage based on the following equation:

$$V_{OUT} = 1.242V \text{ X } \left(\frac{R2}{R1} + 1\right)$$

This equation is correct due to the configuration of the bandgap reference. The bandgap voltage is relative to the output, as seen in the block diagram. Traditional regulators normally have the reference voltage relative to ground and have a different V_{OUT} equation.

Resistor values ate not critical because ADJ(adjust) has a high input impedance, but for best results use resistors of 470k or less. A capacitor from ADJ to ground provides greatly improved noise performance.

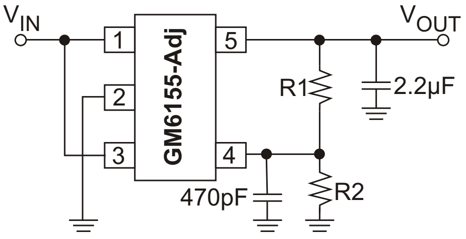

Figure 5. Ultra-Low- Noise Adjustable Voltage Application

Figure 5 includes the optional 470pF noise bypass capacitor from ADJ to GND to reduce output noise.

Dual-Supply Operation

When used in dual supply systems where the regulator load is returned to a negative supply, the output voltage must be diode clamped to ground.

◆ Typical Characteristics

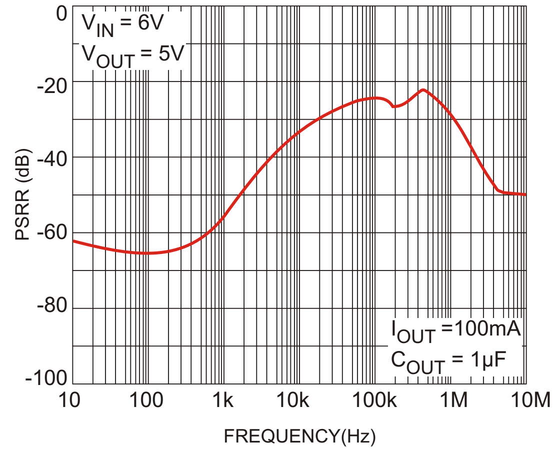

Figure 6. Power Supply Rejection Ratio

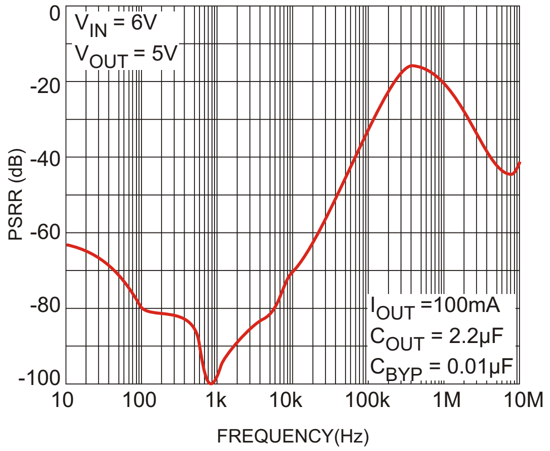

Figure 7. Power Supply Rejection Ratio

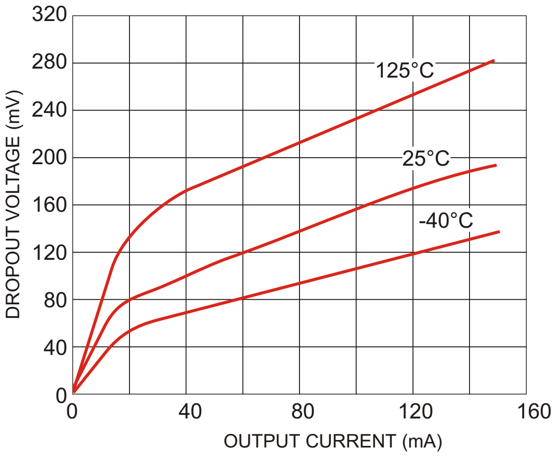

Figure 8. Dropout Voltage vs. Output Current

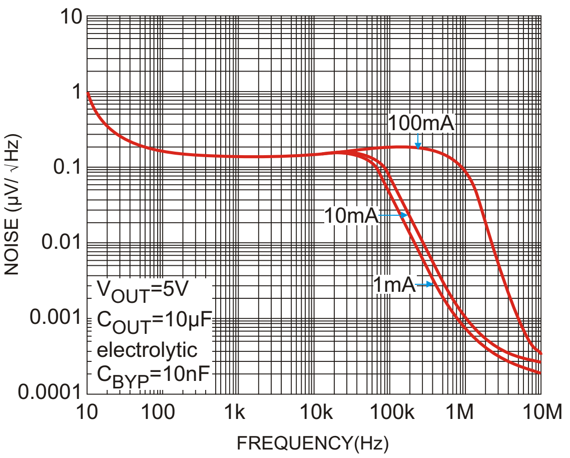

Figure 9. Noise Performance

◆ SOT-25(SOT-23-5) PACKAGE OUTLINE DIMENSIONS

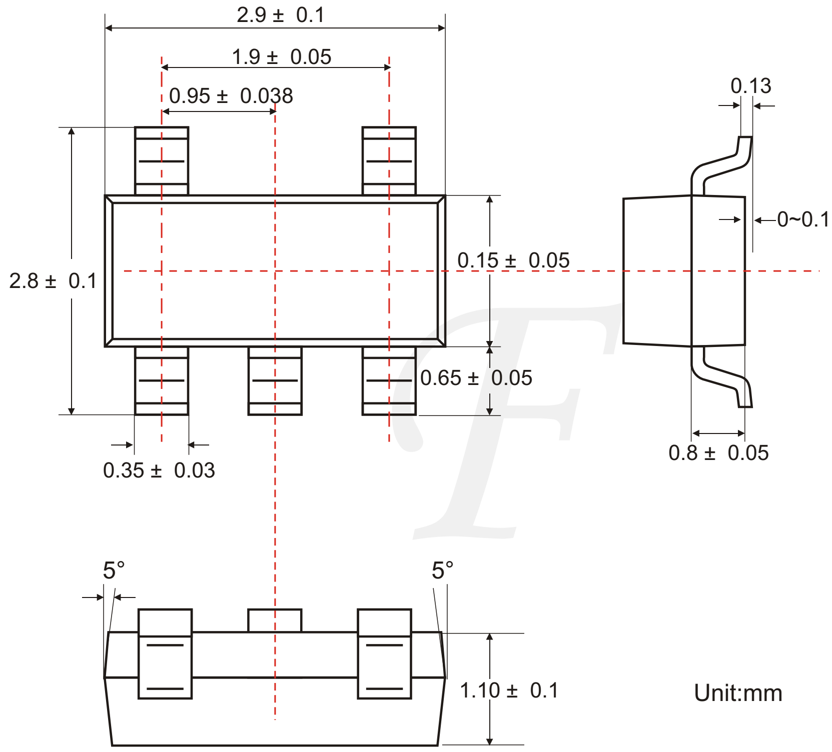
2.9 ± 0.1
1.9 ± 0.05
0.95 ± 0.038
0.13
0~0.1
2.8 ± 0.1
0.15 ± 0.05
0.65 ± 0.05
0.35 ± 0.03
0.8 ± 0.05
5°
5°
1.10 ± 0.1

Unit:mm

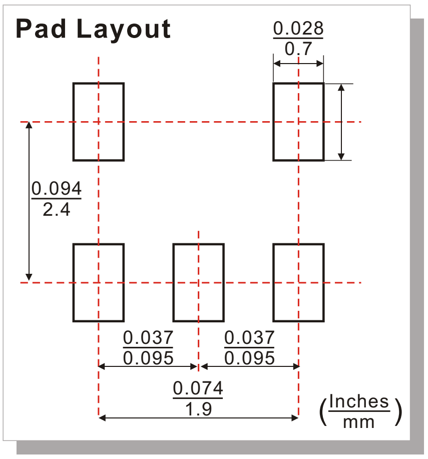
Pad Layout
0.028
0.7
0.094
2.4
0.037
0.095
0.037
0.095
0.074
1.9
(Inches / mm)

◆ ORDERING NUMBER

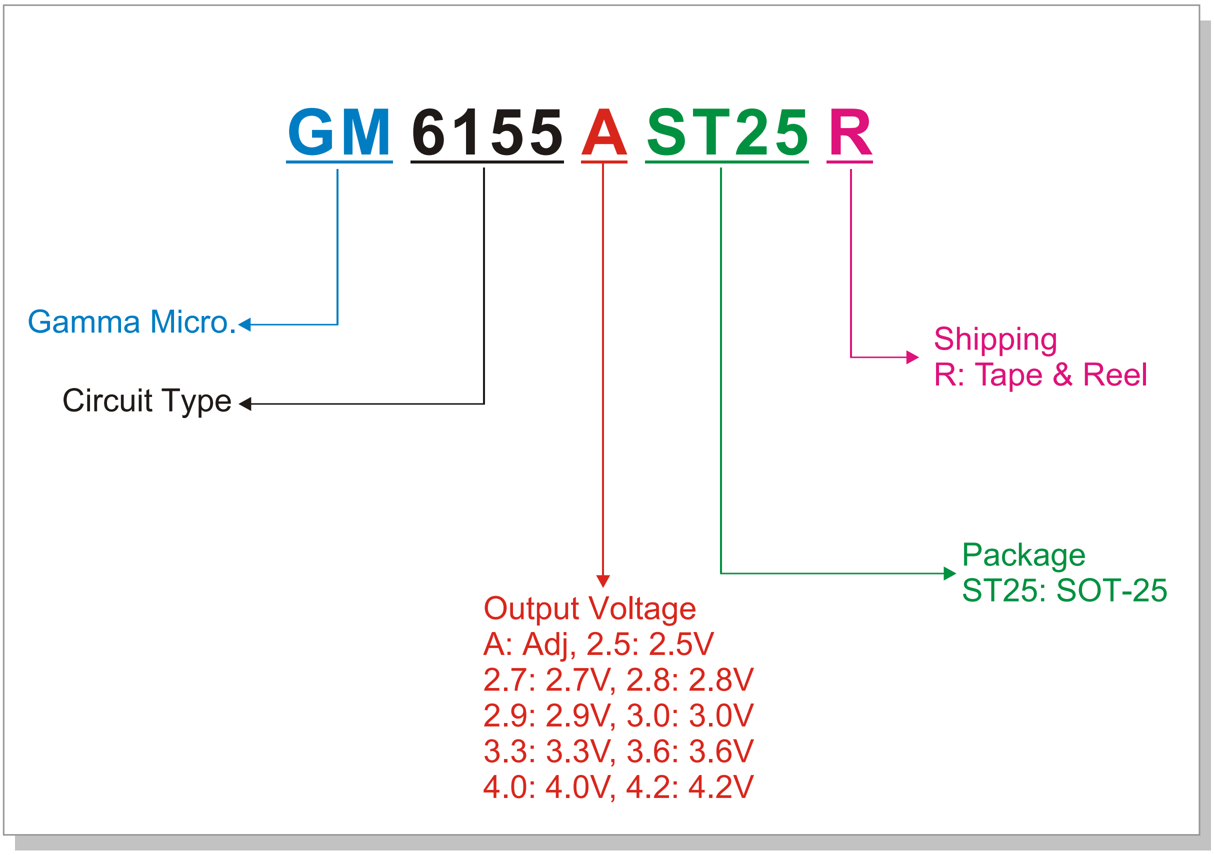
GM 6155 A ST25 R

Gamma Micro.

Circuit Type

Shipping
R: Tape & Reel

Package
ST25: SOT-25

Output Voltage
A: Adj, 2.5: 2.5V
2.7: 2.7V, 2.8: 2.8V
2.9: 2.9V, 3.0: 3.0V
3.3: 3.3V, 3.6: 3.6V
4.0: 4.0V, 4.2: 4.2V