查询GP1A75EJ000F供应商 捷多邦，专业PCB打样工厂，24小时加急出货

GP1A75EJ000F

Gap : 5mm Slit : 0.5mm *OPIC Output, Screw fixing type Transmissive Photointerrupter with Connector

■ Description

GP1A75EJ000F are standard, OPIC output, transmissive photointerrupters with opposing emitter and detector in a case, providing non-contact sensing. For this family of devices, the emitter and detector are inserted in a case, and a 3-pin connector is included to allow remote-mount or off-board designs.

■ Features

1. Transmissive with OPIC output
2. Highlights :
   - Includes additional screw fixing holes
   - Straight drop insertion
3. Key Parameters :
   - Gap Width : 5mm
   - Slit Width (detector side): 0.5mm
   - Package : 24×12.8×8mm (without connector and hooks)
   - Connector : Tyco Electronics AMP (PN : 292133-3)
   - Output Type : Low when the object is present.
4. Lead free and RoHS directive compliant

■ Agency approvals/Compliance

1. Compliant with RoHS directive

■ Applications

1. General purpose detection of object presence or motion.
2. Example: PPC, FAX, Printer

* "OPIC"(Optical IC) is a trademark of the SHARP Corporation. An OPIC consists of a light-detecting element and a signal-processing

Notice The content of data sheet is subject to change without prior notice.
In the absence of confirmation by device specification sheets, SHARP takes no responsibility for any defects that may occur in equipment using any SHARP devices shown in catalogs, data books, etc. Contact SHARP in order to obtain the latest device specification sheets before using any SHARP device.

■ Internal Connection Diagram

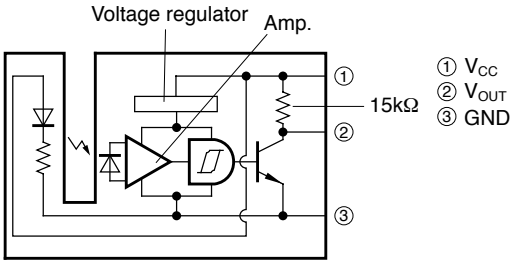

Truth table

Condition	Output
Light beam interrupted	Low
Light beam uninterrupted	High

■ Outline Dimensions

(Unit : mm)

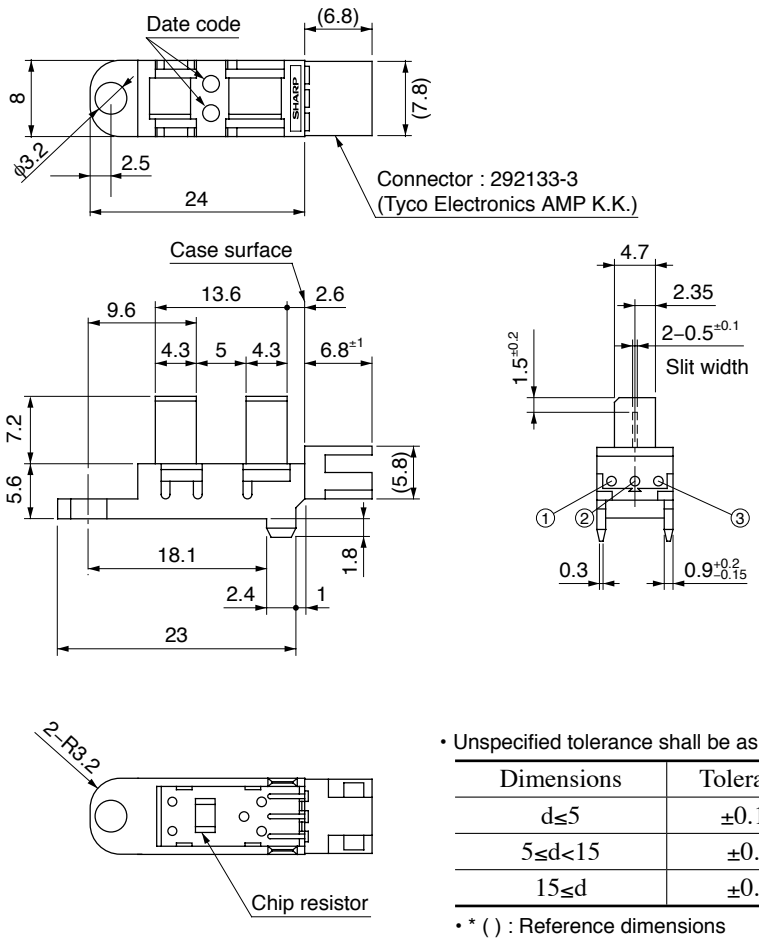

• Unspecified tolerance shall be as follows ;

Dimensions	Tolerance
d≤5	±0.15
5≤d<15	±0.2
15≤d	±0.3

• * ( ) : Reference dimensions

Product mass : approx. 1.2g

Connector terminal plating material : Sn

Date code (2 digit)

1st digit		2nd digit	
Year of production		Month of production	
A.D.	Mark	Month	Mark
2000	0	1	1
2001	1	2	2
2002	2	3	3
2003	3	4	4
2004	4	5	5
2005	5	6	6
2006	6	7	7
2007	7	8	8
2008	8	9	9
2009	9	10	X
2010	0	11	Y
:	:	12	Z

repeats in a 10 year cycle

Country of origin

Japan or Philippines
(Indicated on the packing case)

■ Absolute Maximum Ratings

(T_a=25˚C)

Parameter	Symbol	Rating	Unit
Supply voltage	V_{CC}	–0.5 to +10	V
*1 Output current	I_{OL}	50	mA
*2 Operating temperature	T_{opr}	–20 to +75	˚C
*2 Storage temperature	T_{stg}	–30 to +85	˚C

*1 Collector current of output transistor, refer to Fig.1.
*2 The connector should be plugged in/out at normal temperature.

■ Electro-optical Characteristics

(Unless otherwise specified, V_{CC}=5V, T_a=25˚C)

Parameter		Symbol	Conditions	MIN.	TYP.	MAX.	Unit
Low level supply current		I_{CCL}	Light beam interrupted	–	–	20	mA
Low level output voltage		V_{OL}	Light beam interrupted, I_{OL}=16mA	–	–	0.35	V
High level supply current		I_{CCH}	Light beam uninterrupted	–	–	20	mA
High level output voltage		V_{OH}	Light beam uninterrupted	V_{CC}×0.9	–	–	V
Operating supply voltage		V_{CC}	–	4.5	–	5.5	V
Response characteristics	Min. interrupted time	t_L	–	166	–	–	μs
	Min. uninterrupted time	t_H		166	–	–	

Fig.1 Low Level Output Current vs. Ambient Temperature

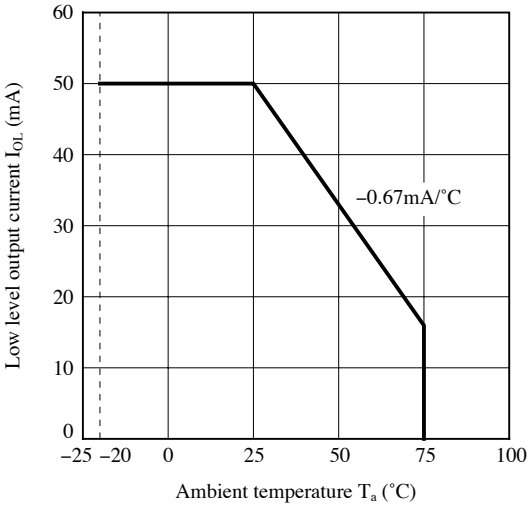

Fig.2 Low Level Output Voltage vs. Low Level Output Current

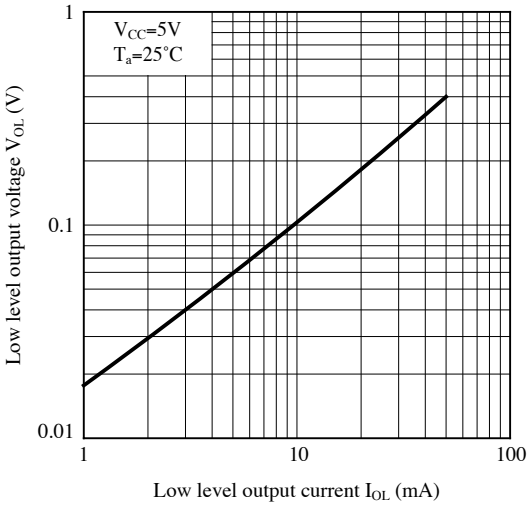

Fig.3 Low Level Output Voltage vs. Ambient Temperature

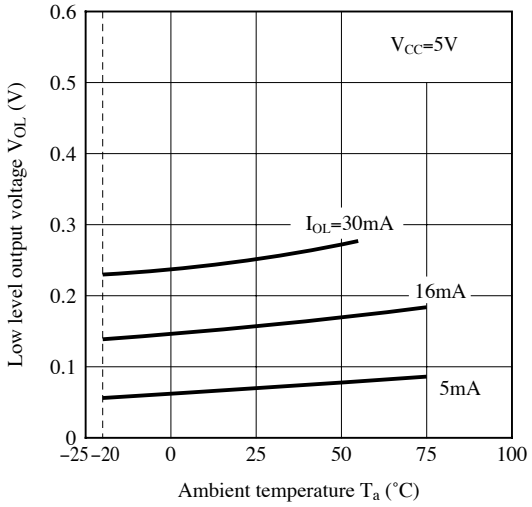

Fig.4 Supply Current vs. Supply Voltage

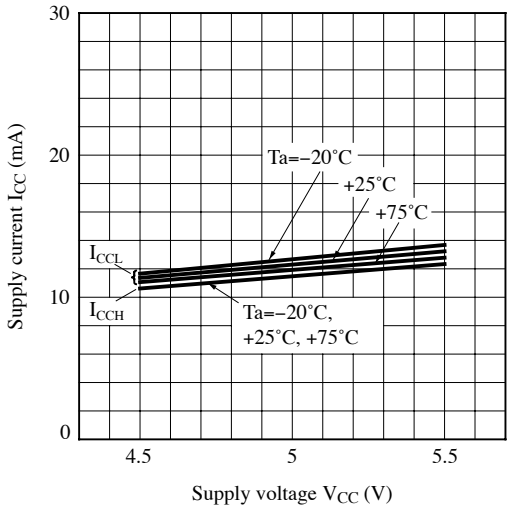

Fig.5 Detecting Position Characteristics (1)

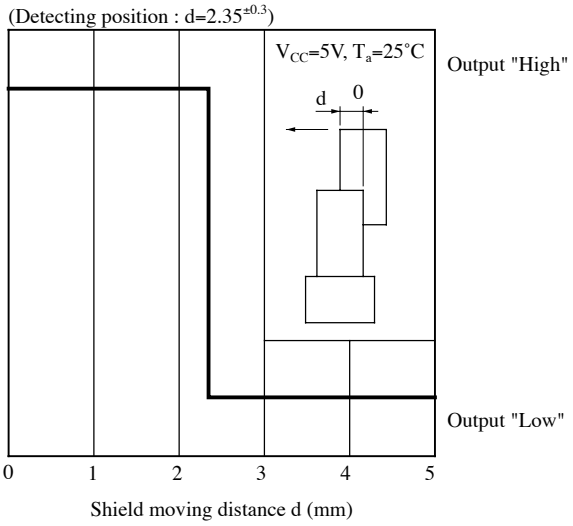

Fig.6 Detecting Position Characteristics (2)

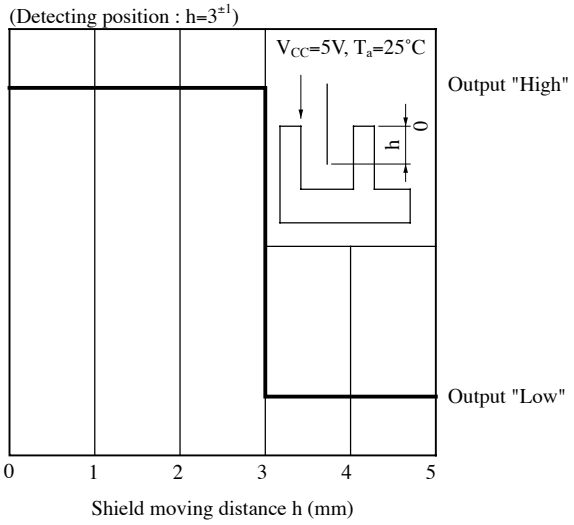

Remarks : Please be aware that all data in the graph are just for reference and not for guarantee.

■ Design Considerations

● Design guide

1) Prevention of detection error
   To prevent photointerrupter from faulty operation caused by external light, do not set the detecting face to the external light.
2) In order to stabilize power supply line, connect a by-pass capacitor of more than 0.01μF between V_{CC} and GND near the device.
3) When the sensor is connected with long wire, noise might be on the signal from the sensor while it is going through the wire. To avoid this problem, please evaluate the sensor under actual usage condition to make sure that the system works fine.
4) Position of opaque board
   Opaque board shall be installed at place 5mm or more from the top of elements.

(Example)

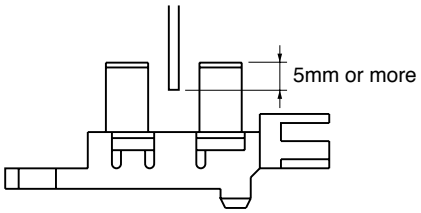

This product is not designed against irradiation and incorporates non-coherent IRED.

● Recommended mounting type

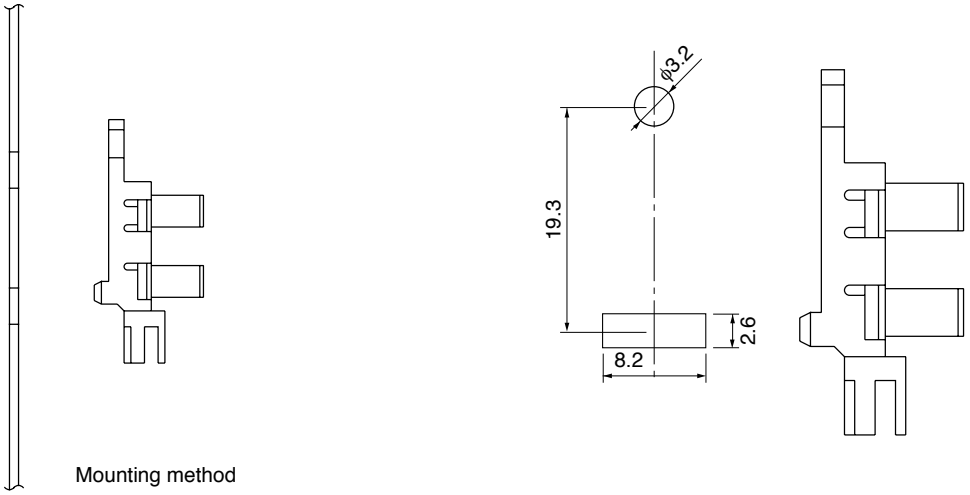

● Parts

This product is assembled using the below parts.

• Photodetector (qty. : 1) [Using a silicon photodiode as light detecting portion, and a bipolar IC as signal processing circuit]

Category	Maximum Sensitivity wavelength (nm)	Sensitivity wavelength (nm)	Response time (μs)
Photodiode	900	400 to 1 200	3

• Photo emitter (qty. : 1)

Category	Material	Maximum light emitting wavelength (nm)	I/O Frequency (MHz)
Infrared emitting diode (non-coherent)	Gallium arsenide (GaAs)	950	0.3

• Material

Case	Connector terminal finish
Black polycarbonate resin (UL94 HB)	Sn plating

• Others

Laser generator is not used.

■ Manufacturing Guidelines

● Notes of cleaning

Please carry out neither the immersion cleaning nor the ultrasonic cleaning to avoid the solvent residue inside the case.

When necessary, dust and stain shall clean by air-blow or wipe off by soft cloth soaked in cleaning agent. The cleaning agent used to wipe off must use only the following kind. Ethyl alcohol, Methyl alcohol and Isopropyl alcohol.

● Presence of ODC

This product shall not contain the following materials.
And they are not used in the production process for this product.
Regulation substances : CFCs, Halon, Carbon tetrachloride, 1.1.1-Trichloroethane (Methylchloroform)

Specific brominated flame retardants such as the PBBOs and PBBs are not used in this product at all.

This product shall not contain the following materials banned in the RoHS Directive (2002/95/EC).

- Lead, Mercury, Cadmium, Hexavalent chromium, Polybrominated biphenyls (PBB), Polybrominated diphenyl ethers (PBDE).

■ Package specification

● Case package

Package materials

Anti-static plastic bag : Polyethtylene
Moltopren : Urethane
Packing case : Corrugated fiberboard

Package method

100 pcs of products shall be packaged in a plastic bag, Ends shall be fixed by stoppers. The bottom ot the packing case is covered with moltopren, and 3 plastic bags shall be put int the packing case.
Moltopren should be located after all product are settled (1 packing conteains 300 pcs).

Packing composition

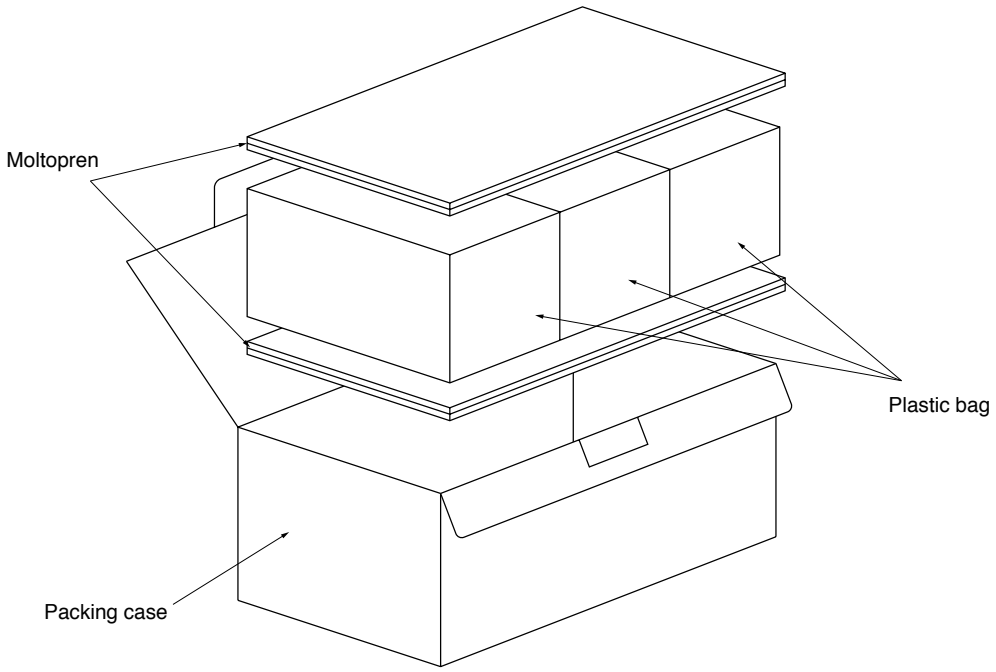

■ Important Notices

· The circuit application examples in this publication are provided to explain representative applications of SHARP devices and are not intended to guarantee any circuit design or license any intellectual property rights. SHARP takes no responsibility for any problems related to any intellectual property right of a third party resulting from the use of SHARP's devices.

· Contact SHARP in order to obtain the latest device specification sheets before using any SHARP device. SHARP reserves the right to make changes in the specifications, characteristics, data, materials, structure, and other contents described herein at any time without notice in order to improve design or reliability. Manufacturing locations are also subject to change without notice.

· Observe the following points when using any devices in this publication. SHARP takes no responsibility for damage caused by improper use of the devices which does not meet the conditions and absolute maximum ratings to be used specified in the relevant specification sheet nor meet the following conditions:
(i) The devices in this publication are designed for use in general electronic equipment designs such as:
--- Personal computers
--- Office automation equipment
--- Telecommunication equipment [terminal]
--- Test and measurement equipment
--- Industrial control
--- Audio visual equipment
--- Consumer electronics
(ii) Measures such as fail-safe function and redundant design should be taken to ensure reliability and safety when SHARP devices are used for or in connection with equipment that requires higher reliability such as:
--- Transportation control and safety equipment (i.e., aircraft, trains, automobiles, etc.)
--- Traffic signals
--- Gas leakage sensor breakers
--- Alarm equipment
--- Various safety devices, etc.
(iii) SHARP devices shall not be used for or in connection with equipment that requires an extremely high level of reliability and safety such as:
--- Space applications
--- Telecommunication equipment [trunk lines]
--- Nuclear power control equipment
--- Medical and other life support equipment (e.g., scuba).

· If the SHARP devices listed in this publication fall within the scope of strategic products described in the Foreign Exchange and Foreign Trade Law of Japan, it is necessary to obtain approval to export such SHARP devices.

· This publication is the proprietary product of SHARP and is copyrighted, with all rights reserved. Under the copyright laws, no part of this publication may be reproduced or transmitted in any form or by any means, electronic or mechanical, for any purpose, in whole or in part, without the express written permission of SHARP. Express written permission is also required before any use of this publication may be made by a third party.

· Contact and consult with a SHARP representative if there are any questions about the contents of this publication.