查询HDMIULC6-4SC6供应商 捷多邦，专业PCB打样工厂，24小时加急出货

HDMIULC6-4SC6

Ultra large bandwidth ESD protection

Main applications

- HDMI ports at 1.65 Gb/s and up to 3.2 Gb/s
- IEEE 1394a, b, or c up to 3.2 Gb/s
- USB 2.0 ports up to 480 Mb/s (Hi-Speed)
- Ethernet port: 10/100/1000 Mb/s
- Video line protection

Description

The **HDMIULC6-4SC6** is a monolithic, application specific discrete device dedicated to ESD protection of the HDMI connection. It also offers the same high level of protection for IEEE 1394a and IEEE 1394b/c, USB 2.0, Ethernet links, and video lines.

Its ultra high cutoff frequency (5.3 GHz) secures a high level of signal integrity. The device topology provides this integrity without compromising the complete protection of ICs against the most stringent ESD strikes.

Features

- 4 line 15 kV ESD protection
- Protects V_{BUS} when applicable
- Ultra high bandwidth - no inluence on signal rise and fall times - maximised number of signal harmonics
- Very low leakage current: 0.5 µA max.
- Fast response time compared with varistors
- SOT23-6L package
- RoHS compliant

Complies with these standards:

- IEC 61000-4-2 level 4
  - 15 kV air discharge
  - 8 kV (and up to 15 kV) contact discharge

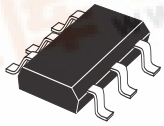

SOT23-6L
(JEDEC MO178AB)

Functional diagram

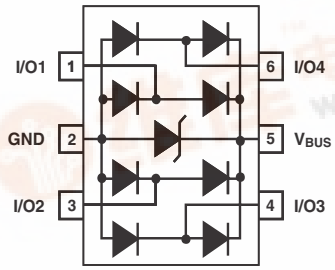

When used with an HDMI application, Pin 5 should not be connected to protect against backdrive current flow.

Benefits

- ESD standards compliance guaranteed at device level, hence greater immunity at system level
- ESD protection of V_{BUS} when applicable.
- High efficiency due to low residual voltage when confronted by an ESD surge
- Minimized rise and fall times for maximum data integrity
- Consistent D+ / D- signal balance:
  - Ultra low impact on intra-, inter-pair skew
  - Matching high bit rate HDMI requirements and ready for future evolution
- Low PCB space occupation - 9 mm² maximum foot print
- Low leakage current for longer operation of battery powered devices
- Higher reliability offered by monolithic integration

Order code

Part Number	Marking
HDMIULC6-4SC6	DL46

找PDF 维库一下 pdf.dzsc.com

1 Characteristics

Table 1. Absolute ratings

Symbol	Parameter		Value	Unit
V_{PP}	Peak pulse voltage	IEC 61000-4-2 air discharge IEC 61000-4-2 contact discharge MIL STD883C-Method 3015-6	±15 ±15 ±25	kV
T_{stg}	Storage temperature range		-55 to +150	°C
T_j	Maximum junction temperature		125	°C
T_L	Lead solder temperature (10 seconds duration)		260	°C

Table 2. Electrical characteristics (T_{amb} = 25° C)

Symbol	Parameter	Test Conditions	Value			Unit
			Min.	Typ.	Max	
I_{RM}	Leakage current	V_{RM} = 5 V			0.5	µA
V_{BR}	Breakdown voltage between V_{BUS} and GND	I_R = 1 mA	6			V
V_{CL}	Clamping voltage	I_{PP} = 1 A, t_p = 8/20 µs Any I/O pin to GND			12	V
		I_{PP} = 5 A, t_p = 8/20 µs Any I/O pin to GND			17	V
$C_{i/o\text{-}GND}$	Capacitance between I/O and GND	V_R = 0 V, F = 1 MHz			1	pF
		V_R = 0 V, F = 825 MHz		0.6		
$\Delta C_{i/o\text{-}GND}$	Capacitance variation between I/O and GND			0.015		
$C_{i/o\text{-}i/o}$	Capacitance between I/O	V_R = 0 V, F = 1 MHz		0.42	0.5	pF
		V_R = 0 V, F = 825 MHz		0.3		
$\Delta C_{i/o\text{-}i/o}$	Capacitance variation between I/O			0.007		

Figure 1. Line capacitance versus line voltage (typical values)

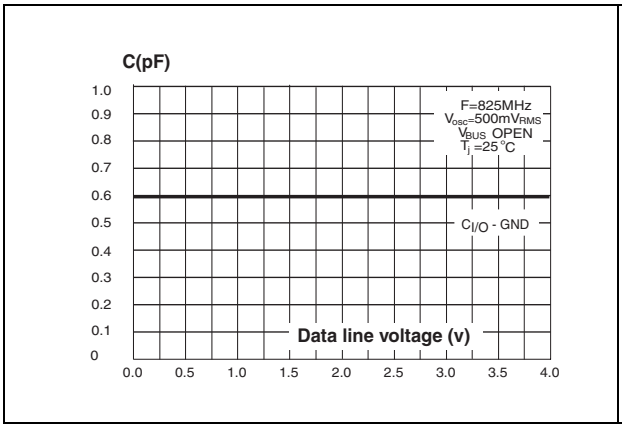

Figure 2. Line capacitance versus frequency (typical values)

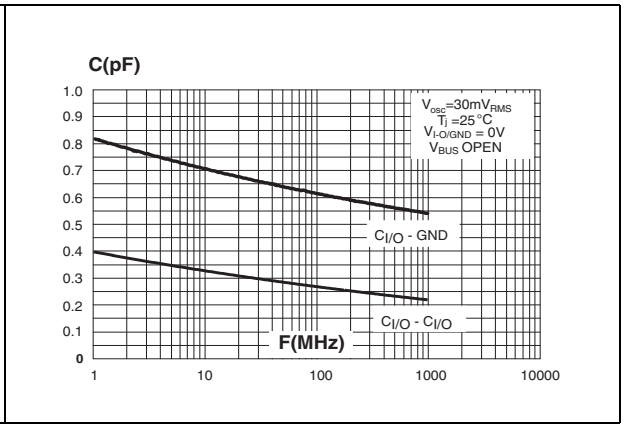

Figure 3. Relative variation of leakage current versus junction temperature (typical values)

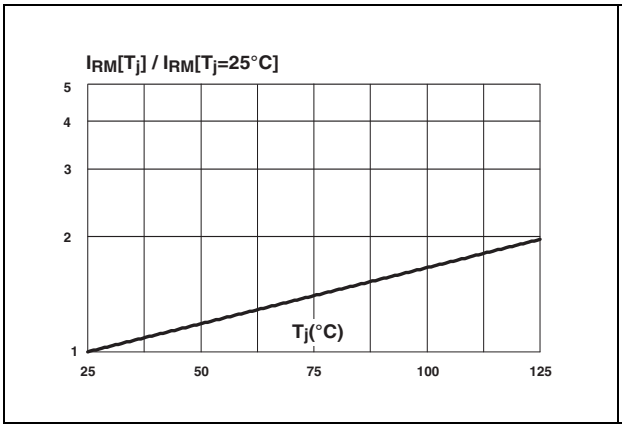

Figure 4. Frequency response

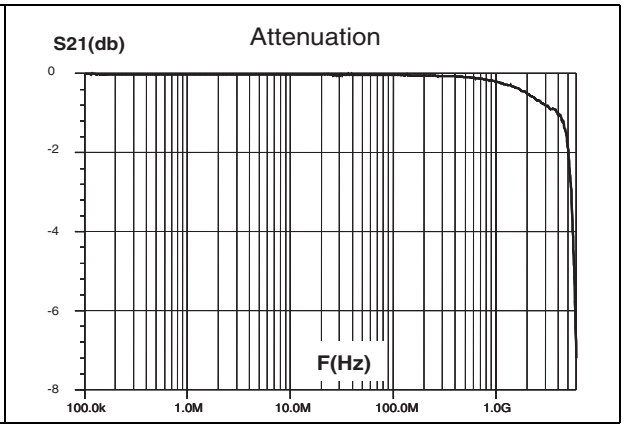

2 Application examples

Figure 5. HDMI Digital single link application using HDMIULC6-4SC6

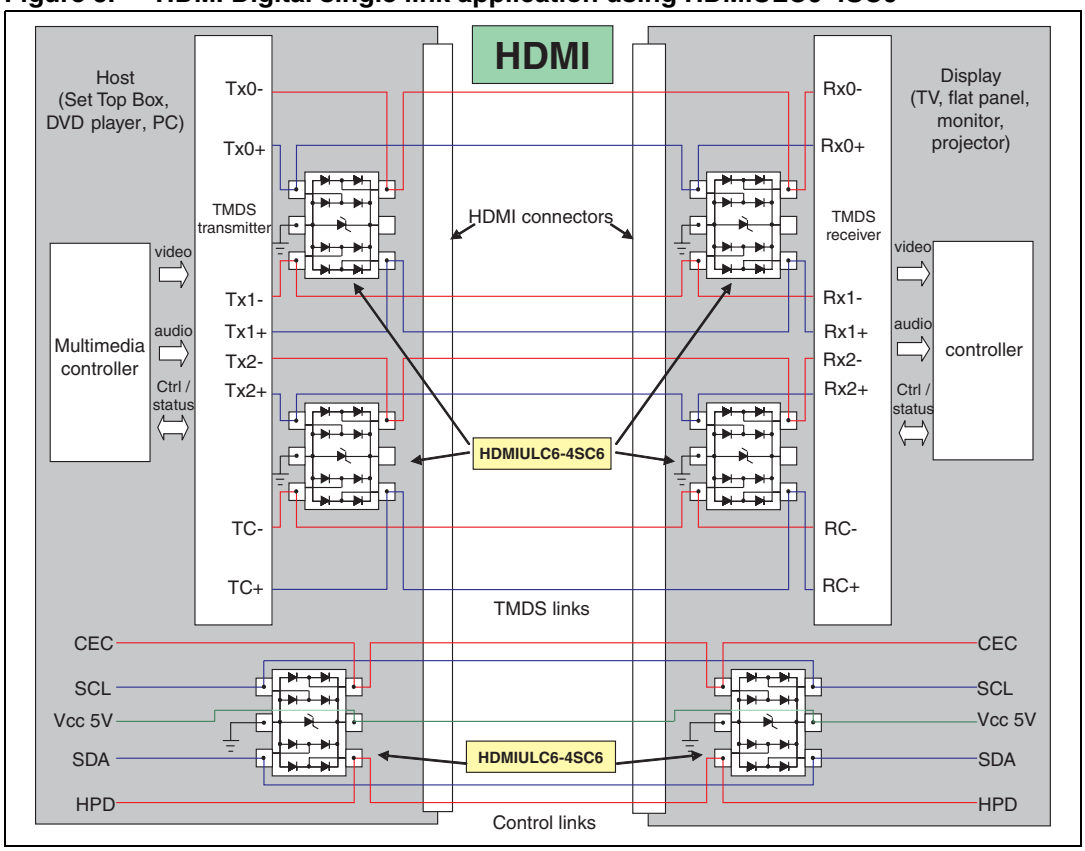

Figure 6. T1/E1/Ethernet protection

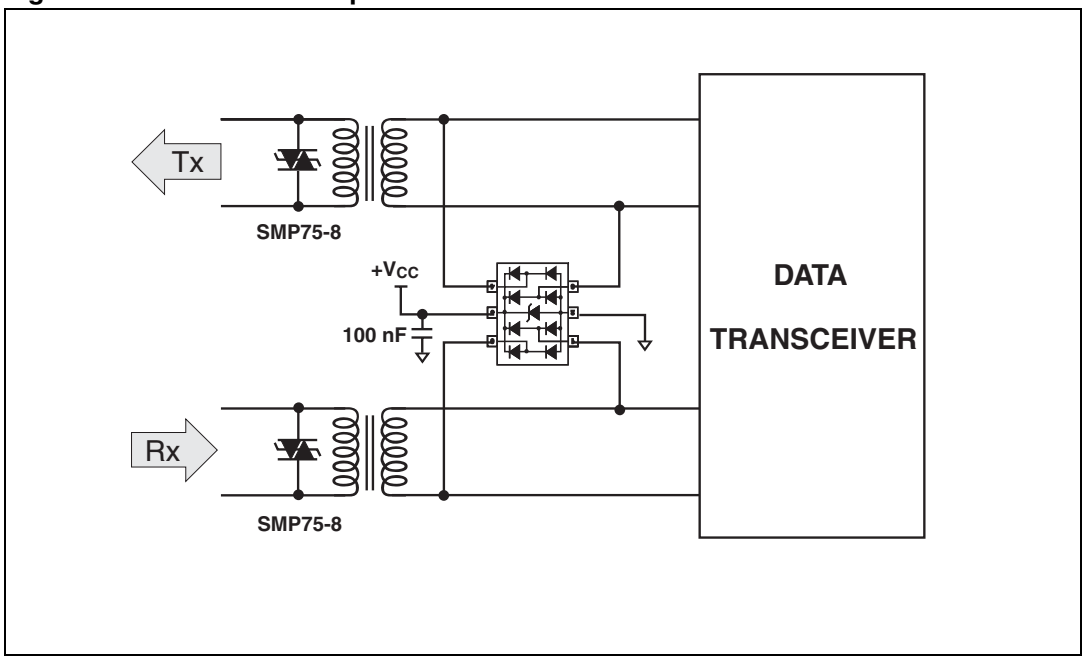

2.1 PCB layout considerations

For HDMI applications, V_{CC} should not be connected. In this case the capacitor C in *Figure 7.* is not needed.

Figure 7. PCB layout considerations (V_{CC} connection is application dependent)

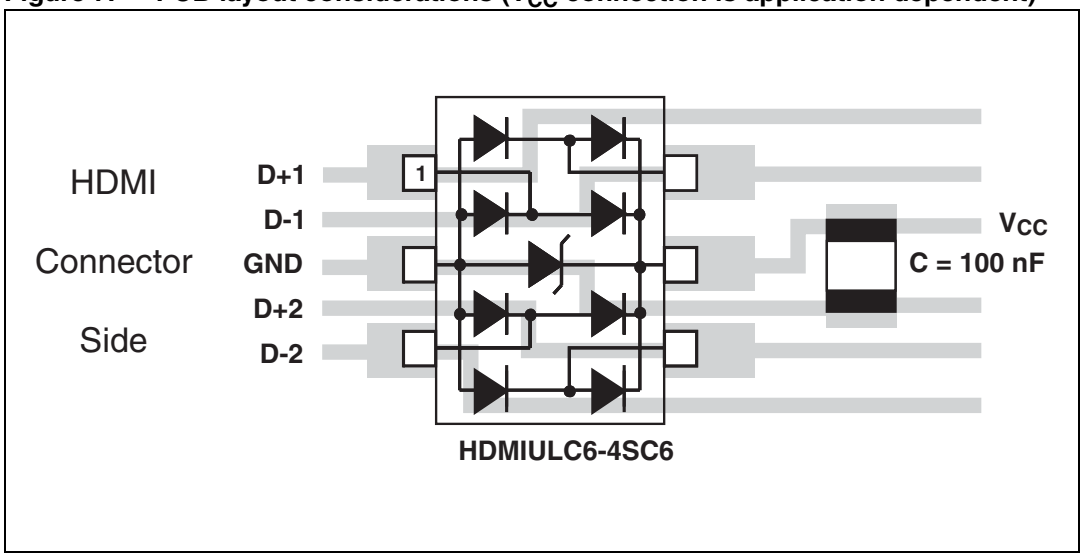

A differential impedance of 100 Ω must be respected in the layout. Both lines of the differential pair should have the same length.

Figure 8. Footprint dimensions (in mm)

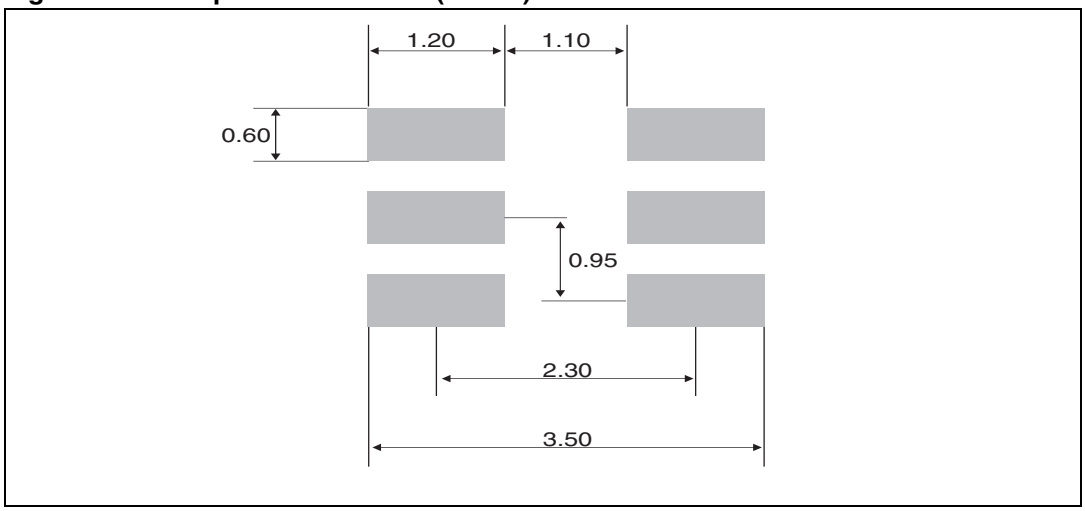

3 Technical information

3.1 Surge protection

The HDMIULC6-4SC6 is particularly optimized to perform ESD surge protection based on the rail to rail topology.

The clamping voltage V_{CL} can be calculated as follows:

$V_{CL}+ = V_{TRANSIL} + V_F$ for positive surges

$V_{CL}- = - V_F$ for negative surges

with: $V_F = V_T + R_d.I_p$

(V_F forward drop voltage) / (V_T forward drop threshold voltage)

and $V_{TRANSIL} = V_{BR} + R_{d_TRANSIL} \cdot I_P$

Calculation example

We assume that the value of the dynamic resistance of the clamping diode is typically: $R_d = 0.5\ \Omega$ and $V_T = 1.1$ V.

We assume that the value of the dynamic resisteance of the transil diode is typically $R_{d_TRANSIL} = 0.5\ \Omega$ and $V_{BR} = 6.1$ V

For an IEC 61000-4-2 surge Level 4 (Contact Discharge: V_g= 8 kV, R_g= 330 Ω), V_{BUS} = +5 V, and, in first approximation, we assume that: $I_p = V_g / R_g = 24$ A.

We find:

$V_{CL}+ = +31.2$ V

$V_{CL}- = -13.1$ V

Note: The calculations do not take into account phenomena due to parasitic inductances.

3.2 Surge protection application example

If we consider that the connections from the pin V_{BUS} to V_{CC}, from I/O to data line, and from GND to PCB GND plane are two tracks 10 mm long and 0.5 mm wide, we can assume that the parasitic inductances, L_{VBUS}, $L_{I/O}$, and L_{GND}, of these tracks are about 6 nH. So when an IEC 61000-4-2 surge occurs on the data line, due to the rise time of this spike (tr = 1 ns), the voltage V_{CL} has an extra value equal to $L_{I/O}.dI/dt + L_{GND}.dI/dt$.

The dI/dt is calculated as: dI/dt = Ip/tr = 24 A/ns for an IEC 61000-4-2 surge level 4 (contact discharge V_g = 8 kV, R_g = 330 Ω

The over voltage due to the parasitic inductances is:
$L_{I/O}.dI/dt = L_{GND}.dI/dt = 6 \times 24 = 144$ V

By taking into account the effect of these parasitic inductances due to unsuitable layout, the clamping voltage will be:

$V_{CL}+ = +31.2 + 144 +144 = 319.2$ V

$V_{CL}- = -13.1 - 144 -144 = -301.1$ V

We can reduce as much as possible these phenomena with simple layout optimization.

It's the reason why some recommendations have to be followed (see *Section 3.3: How to ensure good ESD protection*).

Figure 9. ESD behavior: parasitic phenomena due to unsuitable layout

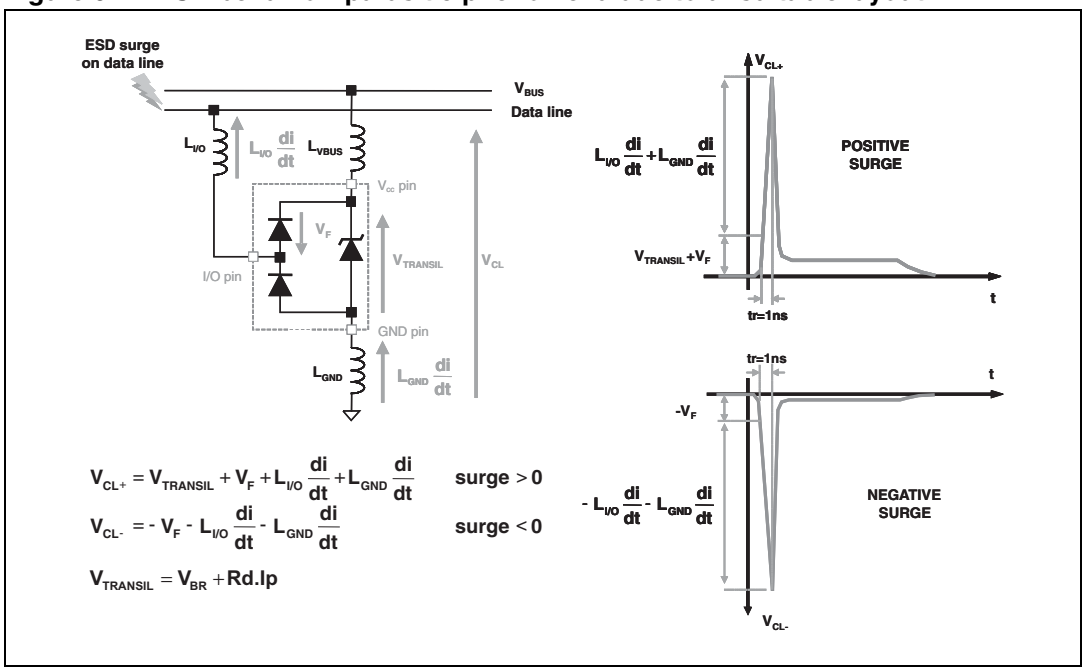

3.3 How to ensure good ESD protection

While the HDMIULC6-4SC6 provides a high immunity to ESD surge, an efficient protection depends on the layout of the board. In the same way, with the rail to rail topology, the track from data lines to I/O pins, from V_{CC} to V_{BUS} pin, and from GND plane to GND pin must be as short as possible to avoid over voltages due to parasitic phenomena (see *Figure 9* and *Figure 10* for layout considerations).

Figure 10. ESD behavior: layout optimization

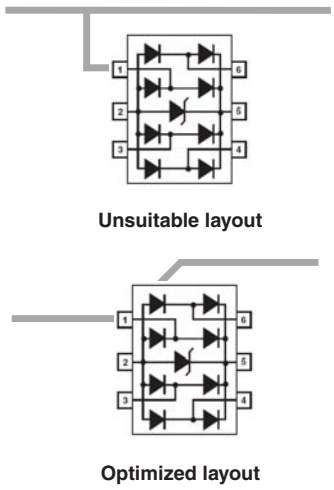

Figure 11. ESD behavior: measurement conditions

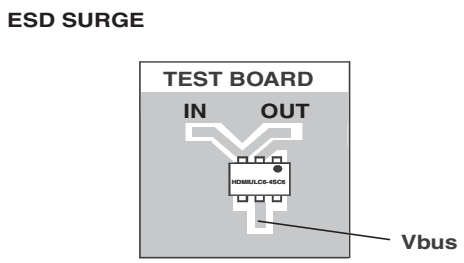

Figure 12. Remaining voltage after the HDMIULC6-4SC6 during positive ESD surge

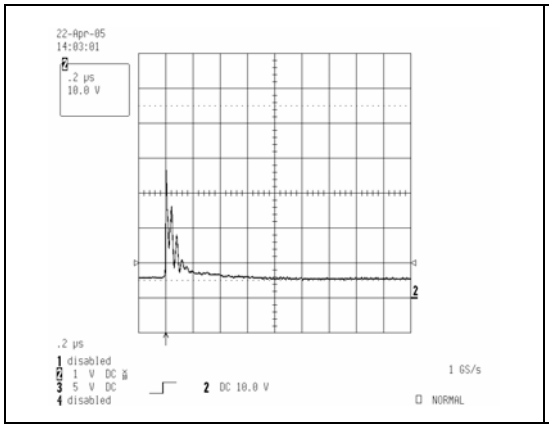

Figure 13. Remaining voltage after the HDMIULC6-4SC6 during negative ESD surge

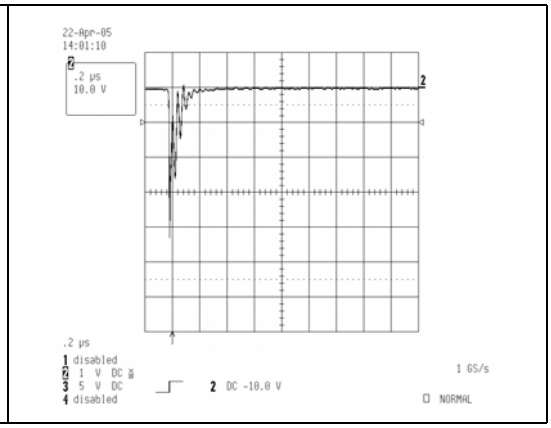

Note: The measurements have been done with the HDMIULC6-4SC6 in open circuit.

IMPORTANT:

An important precaution to take is to put the protection device as close as possible to the disturbance source (generally the connector).

3.4 Crosstalk behavior

Figure 14. Crosstalk phenomena

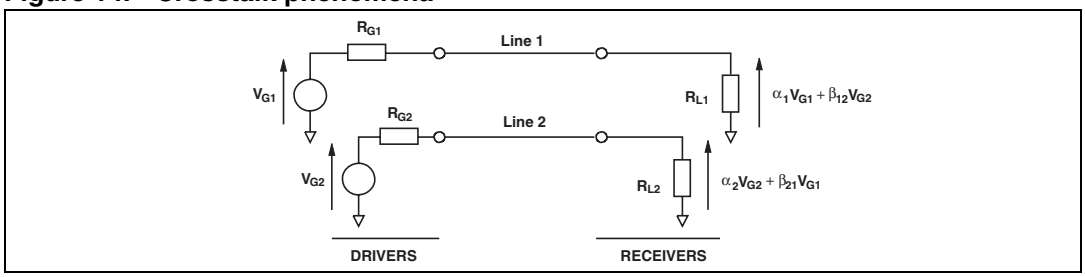

The crosstalk phenomena is due to the coupling between 2 lines. The coupling factor (β_{12} or β_{21}) increases when the gap across lines decreases, particularly in silicon dice. In the example above the expected signal on load R_{L2} is $\alpha_2 V_{G2}$, in fact the real voltage at this point has got an extra value $\beta_{21} V_{G1}$. This part of the V_{G1} signal represents the effect of the crosstalk phenomenon of the line 1 on the line 2. This phenomenon has to be taken into account when the drivers impose fast digital data or high frequency analog signals in the disturbing line. The perturbed line will be more affected if it works with low voltage signal or high load impedance (few kΩ).

Figure 15. Analog crosstalk measurements

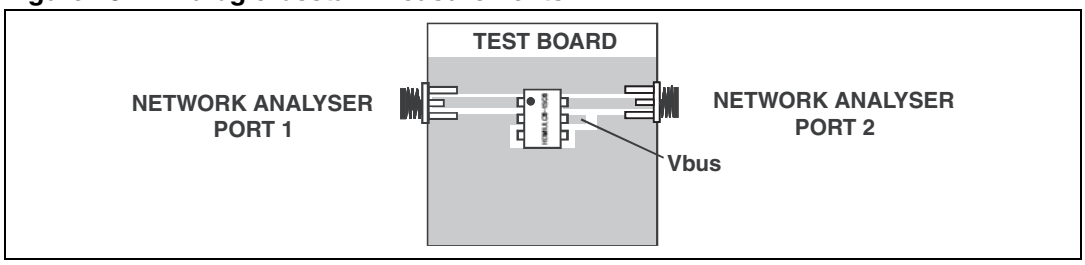

Figure 15 gives the measurement circuit for the analog application. In usual frequency range of analog signals (up to 240 MHz) the effect on disturbed line is less than -45 dB (see *Figure 16*).

Figure 16. Analog crosstalk results

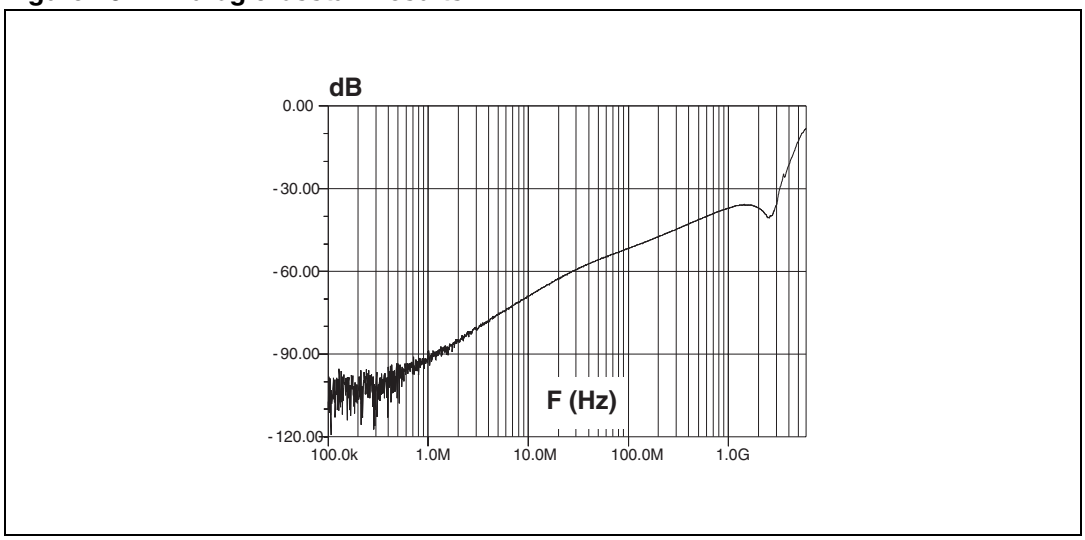

As the HDMIULC6-4SC6 is designed to protect high speed data lines, it must ensure a good transmission of operating signals. The frequency response (*Figure 4.*) gives attenuation information and shows that the HDMIULC6-4SC6 is well suitable for data line transmission up to 3.2 Gb/s.

4 Package information

Table 3. SOT23-6L dimensions

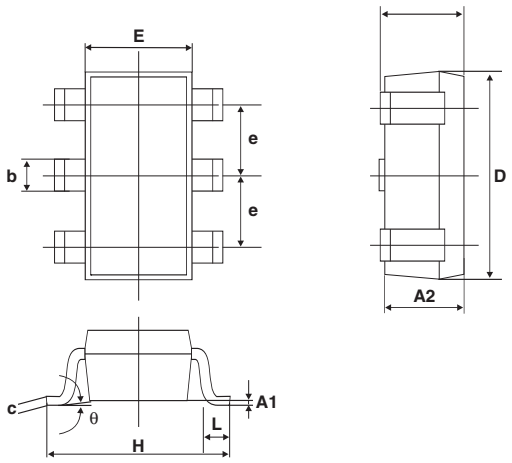

REF.	DIMENSIONS					
	Millimeters			Inches		
	Min.	Typ.	Max.	Min.	Typ.	Max.
A	0.90		1.45	0.035		0.057
A1	0		0.10	0		0.004
A2	0.90		1.30	0.035		0.051
b	0.35		0.50	0.014		0.02
c	0.09		0.20	0.004		0.008
D	2.80		3.05	0.110		0.120
E	1.50		1.75	0.059		0.069
e		0.95			0.037	
H	2.60		3.00	0.102		0.118
L	0.10		0.60	0.004		0.024
θ	0°		10°	0°		10°

In order to meet environmental requirements, ST offers these devices in ECOPACK® packages. These packages have a lead-free second level interconnect. The category of second level interconnect is marked on the package and on the inner box label, in compliance with JEDEC Standard JESD97. The maximum ratings related to soldering conditions are also marked on the inner box label. ECOPACK is an ST trademark. ECOPACK specifications are available at: www.st.com.

5 Ordering information

Ordering code	Marking	Package	Weight	Base qty	Delivery mode
HDMIULC6-4SC6	DL46	SOT23-6L	16.7 mg	3000	Tape and reel

6 Revision history

Date	Revision	Description of Changes
28-Mar-2006	1	First Issue
26-Jul-2006	2	Replaced technical information section.

Please Read Carefully:

Information in this document is provided solely in connection with ST products. STMicroelectronics NV and its subsidiaries (“ST”) reserve the right to make changes, corrections, modifications or improvements, to this document, and the products and services described herein at any time, without notice.

All ST products are sold pursuant to ST’s terms and conditions of sale.

Purchasers are solely responsible for the choice, selection and use of the ST products and services described herein, and ST assumes no liability whatsoever relating to the choice, selection or use of the ST products and services described herein.

No license, express or implied, by estoppel or otherwise, to any intellectual property rights is granted under this document. If any part of this document refers to any third party products or services it shall not be deemed a license grant by ST for the use of such third party products or services, or any intellectual property contained therein or considered as a warranty covering the use in any manner whatsoever of such third party products or services or any intellectual property contained therein.

UNLESS OTHERWISE SET FORTH IN ST’S TERMS AND CONDITIONS OF SALE ST DISCLAIMS ANY EXPRESS OR IMPLIED WARRANTY WITH RESPECT TO THE USE AND/OR SALE OF ST PRODUCTS INCLUDING WITHOUT LIMITATION IMPLIED WARRANTIES OF MERCHANTABILITY, FITNESS FOR A PARTICULAR PURPOSE (AND THEIR EQUIVALENTS UNDER THE LAWS OF ANY JURISDICTION), OR INFRINGEMENT OF ANY PATENT, COPYRIGHT OR OTHER INTELLECTUAL PROPERTY RIGHT.

UNLESS EXPRESSLY APPROVED IN WRITING BY AN AUTHORIZED ST REPRESENTATIVE, ST PRODUCTS ARE NOT RECOMMENDED, AUTHORIZED OR WARRANTED FOR USE IN MILITARY, AIR CRAFT, SPACE, LIFE SAVING, OR LIFE SUSTAINING APPLICATIONS, NOR IN PRODUCTS OR SYSTEMS WHERE FAILURE OR MALFUNCTION MAY RESULT IN PERSONAL INJURY, DEATH, OR SEVERE PROPERTY OR ENVIRONMENTAL DAMAGE. ST PRODUCTS WHICH ARE NOT SPECIFIED AS "AUTOMOTIVE GRADE" MAY ONLY BE USED IN AUTOMOTIVE APPLICATIONS AT USER’S OWN RISK.

Resale of ST products with provisions different from the statements and/or technical features set forth in this document shall immediately void any warranty granted by ST for the ST product or service described herein and shall not create or extend in any manner whatsoever, any liability of ST.

ST and the ST logo are trademarks or registered trademarks of ST in various countries.

Information in this document supersedes and replaces all information previously supplied.

The ST logo is a registered trademark of STMicroelectronics. All other names are the property of their respective owners.

© 2006 STMicroelectronics - All rights reserved

STMicroelectronics group of companies

Australia - Belgium - Brazil - Canada - China - Czech Republic - Finland - France - Germany - Hong Kong - India - Israel - Italy - Japan - Malaysia - Malta - Morocco - Singapore - Spain - Sweden - Switzerland - United Kingdom - United States of America

www.st.com