查询HMC334LP4供应商

捷多邦，专业PCB打样工厂，24小时加急出货

Hittite MICROWAVE CORPORATION

v00.0407

RoHS EARTH FRIENDLY

HMC334LP4 / 334LP4E

SiGe WIDEBAND DOWNCONVERTER, 0.8 - 2.7 GHz

Typical Applications

The HM334LP4 / HMC334LP4E is ideal for Wireless Infrastructure Applications:

- Basestations & Repeaters
- GSM, GPRS & Edge
- CDMA, W-CDMA & TD-SCDMA
- WiMAX & WiBro

Features

Conversion Loss: 0 dB

LO to RF Isolation: 48 dB

Single-Ended LO Drive: -6 dBm

Input IP3: +26 dBm

SSB Noise Figure: 10.5 dB

On-Chip RF Balun

RoHS Compliant 4x4mm QFN Package

Functional Diagram

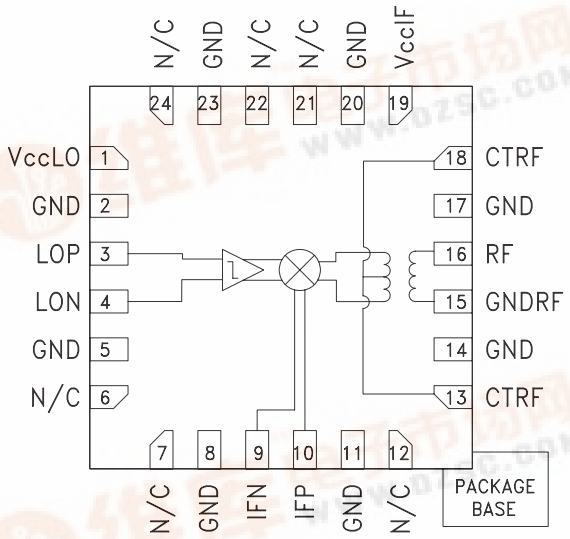

General Description

The HMC334LP4 & HMC334LP4E are low noise, wideband downconverter RFICs which are ideal for Cellular/3G and WiMAX/4G applications from 0.8 to 2.7 GHz. The LO input accepts drive levels from -6 to +6 dBm while the RFIC provides 48 dB of LO to RF isolation, and 0 dB conversion loss. The HMC334LP4(E) will support an IF output bandwidth of up to 600 MHz and consumes only 173mA from a +5.0V supply. This wideband active mixer also provides excellent performance in the presence of high level "Blocker" signals, making it ideal for receiver applications in demanding environments.

Electrical Specifications,

T_A = +25° C, LO = 0 dBm @ 1650 MHz, V_{SLO} = V_{SIF} = +5V, IF = 240 MHz, IF Load = 400 Ohms

Parameter	Min.	Typ.	Max.	Units
Frequency Range, RF		0.8 - 2.7		GHz
Frequency Range, LO		0.01 - 3.3		GHz
Frequency Range, IF		1 - 600		MHz
Conversion Gain (IF XFMR Included)	-5	-1		dB
SSB Noise Figure		10.5		dB
LO to RF Isolation	30	48		dB
IF Output Impedance (Diff)		400		Ohms
IP3 (Input)		+26		dBm
1 dB Compression (Input)	8.5	12		dBm
LO Drive Input Level		-6 to +6		dBm
Supply Current		173	225	mA

Unless otherwise noted all measurements with low side LO

找PDF 维库一下 pdf.dzsc.com

Return Loss @ LO = 0 dBm

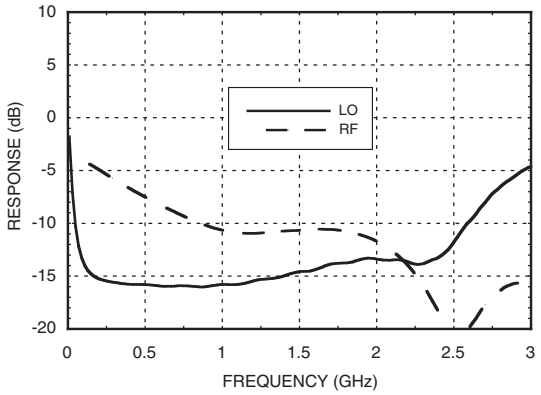

RF Return Loss @ LO = 0 dBm

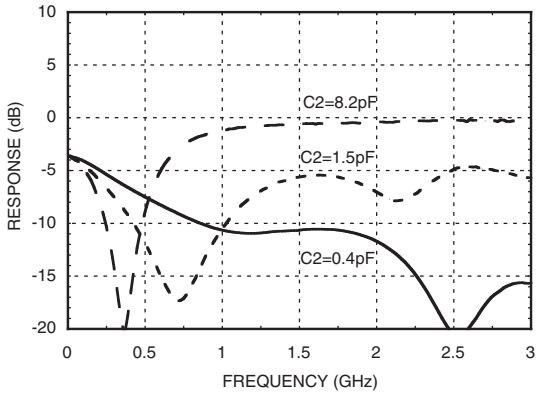

P1dB vs. Temperature @ LO = 0 dBm, IF = 240 MHz

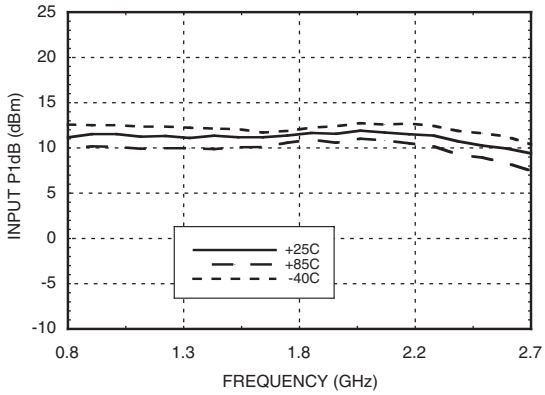

Conversion Gain vs. Temperature @ LO = 0 dBm, IF = 240 MHz

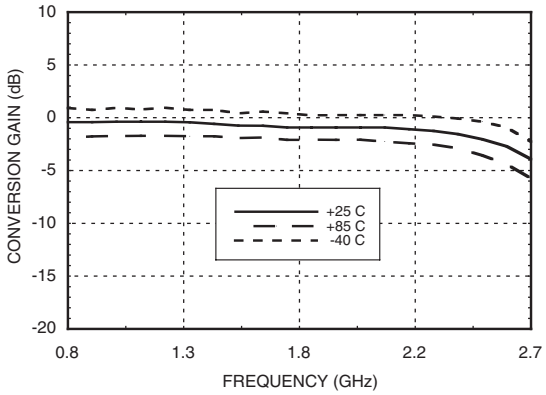

Noise Figure

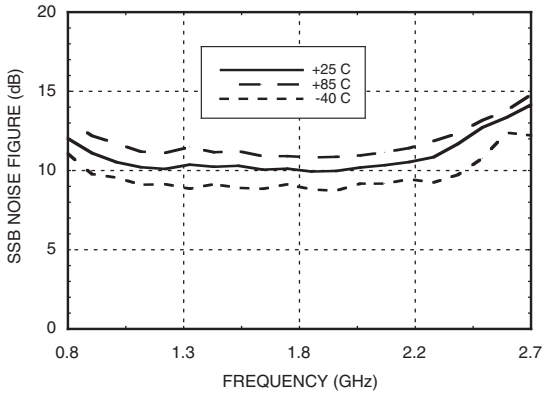

Isolation @ LO = 0 dBm

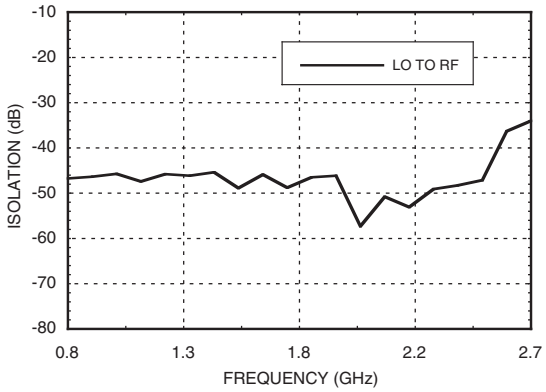

** Unless otherwise noted all measurements with low side LO & IF = 105 MHz.*

HMC334LP4 / 334LP4E

SiGe WIDEBAND DOWNCONVERTER, 0.8 - 2.7 GHz

Input IP3 vs. Temperature @ LO = 0 dBm, IF = 240 MHz

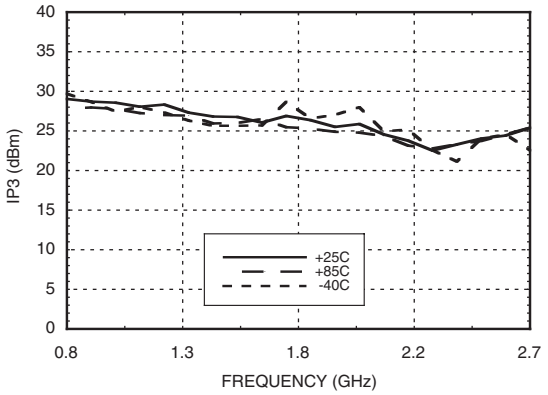

Conversion Gain vs. LO Drive, IF = 360 MHz

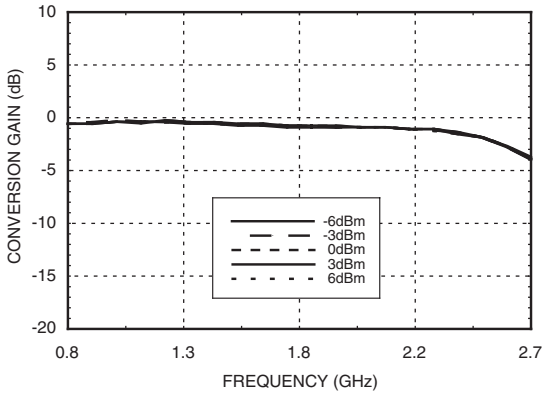

Input IP3 vs. LO Drive, IF = 360 MHz

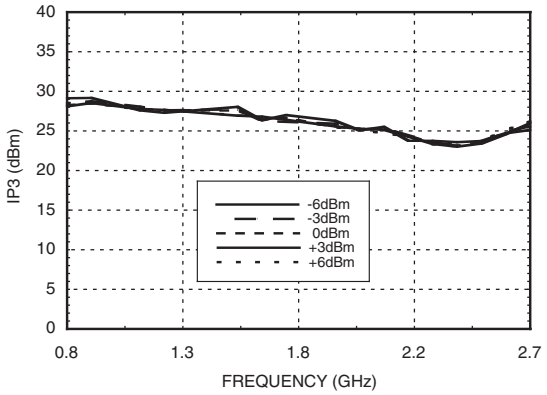

Absolute Maximum Ratings

RF Input (V_{SLO} = V_{SIF}= +5V)	+21 dBm
LO Drive (V_{SLO} = V_{SIF}= +5V)	+12 dBm
VccLO, VccIF	+6 Vdc
Channel Temperature	150 °C
Continuous Pdiss (T = 85°C) (derate 27.8 mW/°C above 85°C)	1.8 W
Thermal Resistance (channel to ground paddle)	36 °C/W
Storage Temperature	-65 to 150 °C
Operating Temperature	-40 to 85 °C

Typical Supply Current vs. VccLO= VccIF

V_{SLO} = V_{SIF} (LO + IF)	I_{SLO} + I_{SIF} (mA)
+4.5	146
+5.0	173
+5.5	200
Downconverter will operate over full voltage range shown above.	

ELECTROSTATIC SENSITIVE DEVICE
OBSERVE HANDLING PRECAUTIONS

** Unless otherwise noted all measurements with low side LO & IF = 105 MHz.*

Outline Drawing

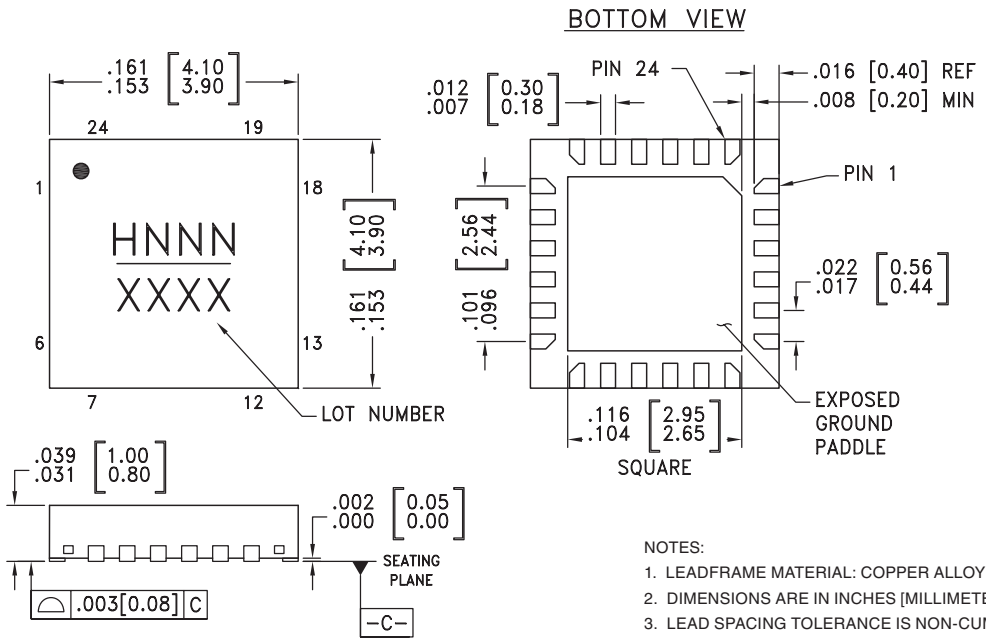

NOTES:
1. LEADFRAME MATERIAL: COPPER ALLOY
2. DIMENSIONS ARE IN INCHES [MILLIMETERS]
3. LEAD SPACING TOLERANCE IS NON-CUMULATIVE.
4. PAD BURR LENGTH SHALL BE 0.15mm MAXIMUM. PAD BURR HEIGHT SHALL BE 0.05mm MAXIMUM.
5. PACKAGE WARP SHALL NOT EXCEED 0.05mm.
6. ALL GROUND LEADS AND GROUND PADDLE MUST BE SOLDERED TO PCB RF GROUND.
7. REFER TO HITTITE APPLICATION NOTE FOR SUGGESTED LAND PATTERN.

Package Information

Part Number	Package Body Material	Lead Finish	MSL Rating	Package Marking [3]
HMC334LP4	Low Stress Injection Molded Plastic	Sn/Pb Solder	MSL1 [1]	H334 XXXX
HMC334LP4E	RoHS-compliant Low Stress Injection Molded Plastic	100% matte Sn	MSL1 [2]	H334 XXXX

[1] Max peak reflow temperature of 235 °C
[2] Max peak reflow temperature of 260 °C
[3] 4-Digit lot number XXXX

Pin Descriptions

Pin Number	Function	Description	Interface Schematic
1	VccLO	Supply for LO Amplifier. Draws approximately 120mA from VSLO.	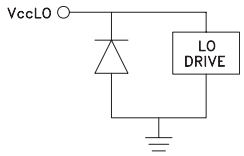
2, 5, 8, 11, 14, 17, 20, 23	GND	These pins and the ground paddle should be connected to a high quality RF/DC ground.	
3	LOP	LO Input Port. This pin needs a DC blocking capacitor. (Typical voltage on this pin will be 1.5 - 1.8V)	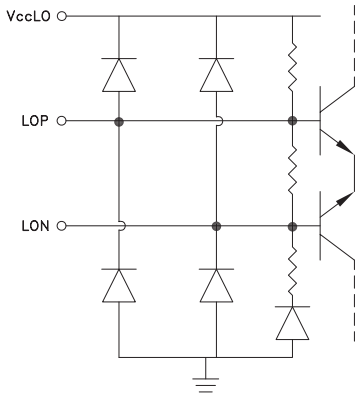
4	LON	For single ended applications, this pin should be AC grounded	
6, 7, 12, 21, 22, 24	N/C	No Connection	
9, 10	IFN, IFP	Differential baseband outputs, 400 ohm differential output impedance. Each port should draw approximately 25mA from VSIF without LO power and 28mA from VSIF with LO power on.	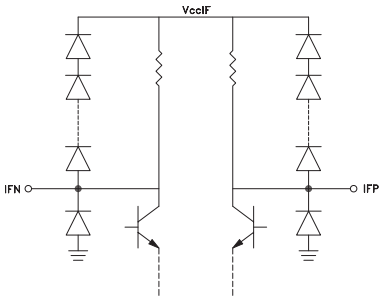
13, 18	CTRF	Center tap of the RF transformer. Biased at 2.2V when connected to gound through a 91 ohm resistor.	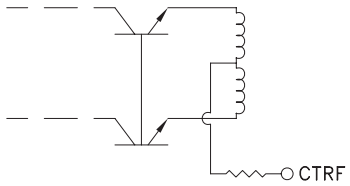

Pin Descriptions *(Continued)*

Pin Number	Function	Description	Interface Schematic
15	GNDRF	Pin to be connected to a high quality RF/DC ground. Also can be used to drive the RF port differentially if needed.	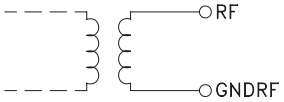
16	RF	50 Ohms impedance. can be matched from 100 - 3000 MHz.	
19	VccIF	Supply decoupling for the mixer stage. (Typical voltage on this pin will be 4.8V)	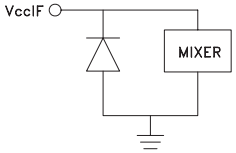

Evaluation PCB

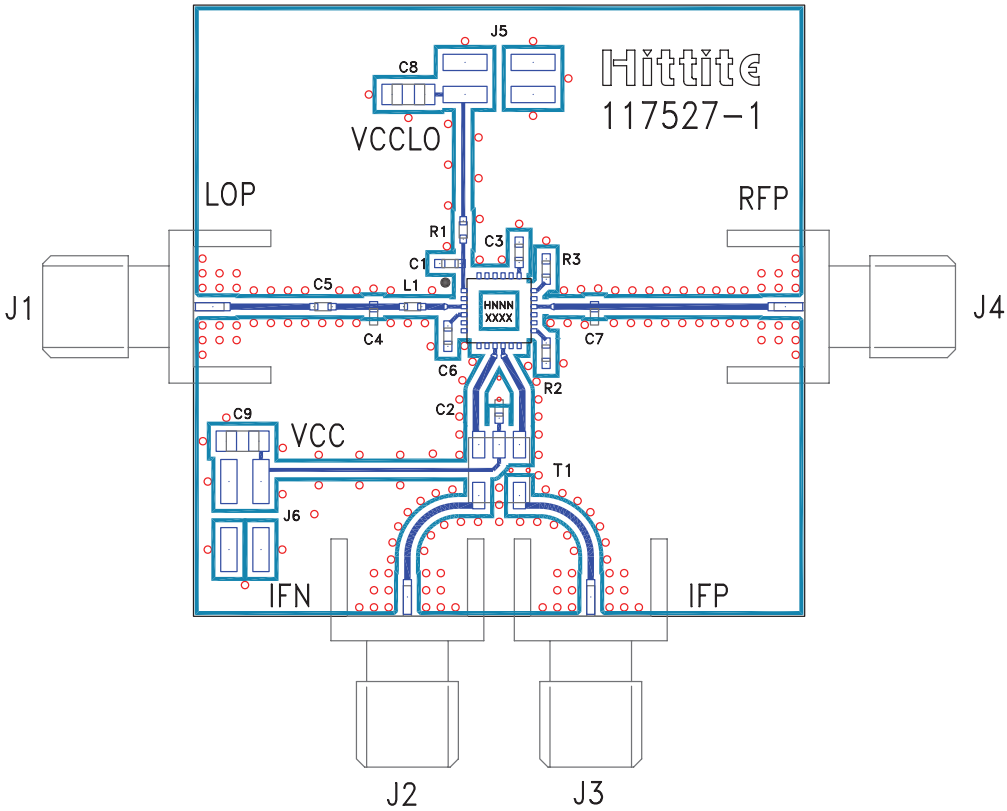

List of Materials for Evaluation PCB 115316 [1]

Item	Description
J1 - J4	Johnson SMA Connector
J5 - J6	2mm SMT
C1 - C3	1000 pF Capacitor, 0402 Pkg.
C4	0.3 pF Capacitor, 0402 Pkg.
C5	100 pF Capacitor, 0402 Pkg.
C6	10 KpF Capacitor, 0402 Pkg.
C7	0.4 pF Capacitor, 0402 Pkg.
C8, C9	0.1 µF Capacitor, 0805 Pkg.
L1	2.7 nH Chip Inductor, 0603 Pkg.
R1	13 Ohm Resistor, 0603 Pkg.
R2, R3	91 Ohm Resistor, 0603 Pkg.
U1	HMC334LP4 / HMC334LP4E
PCB [2]	117527 Evaluation Board

[1] Reference this number when ordering complete evaluation PCB

[2] Circuit Board Material: Rogers 4350

The circuit board used in the final application should use RF circuit design techniques. Signal lines should have 50 ohm impedance while the package ground leads and exposed paddle should be connected directly to the ground plane similar to that shown. A sufficient number of via holes should be used to connect the top and bottom ground planes. The evaluation circuit board shown is available from Hittite upon request.
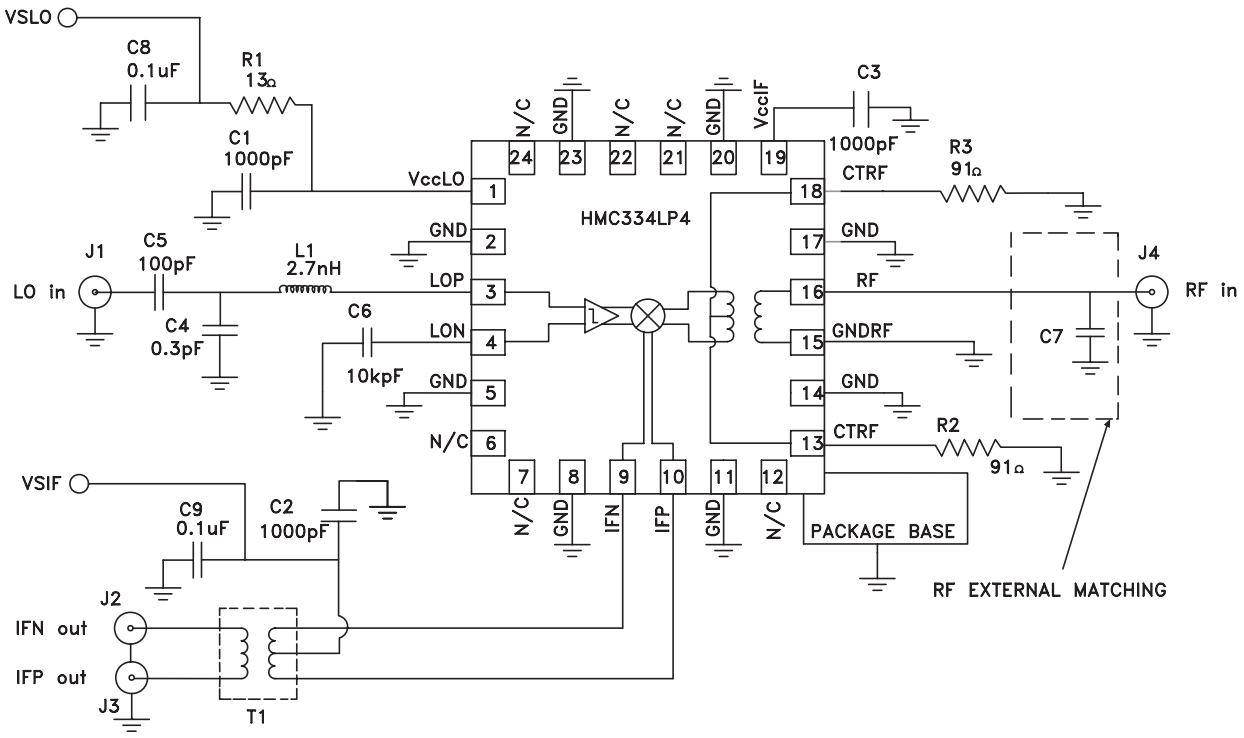
Evaluation PCB Schematic