查询IRFS33N15DPBF供应商 捷多邦，专业PCB打样工厂，24小时加急出货

International
IOR Rectifier

PD- 95537

SMPS MOSFET

IRFB33N15DPbF
IRFS33N15DPbF
IRFSL33N15DPbF

HEXFET® Power MOSFET

V_{DSS}	$R_{DS(on)}$ max	I_D
150V	0.056Ω	33A

Applications

- High frequency DC-DC converters
- Lead-Free

Benefits

- Low Gate-to-Drain Charge to Reduce Switching Losses
- Fully Characterized Capacitance Including Effective C_{OSS} to Simplify Design, (See App. Note AN1001)
- Fully Characterized Avalanche Voltage and Current

TO-220AB IRFB33N15D | D²Pak IRFS33N15D | TO-262 IRFSL33N15D

Absolute Maximum Ratings

	Parameter	Max.	Units
I_D @ T_C = 25°C	Continuous Drain Current, V_{GS} @ 10V	33	A
I_D @ T_C = 100°C	Continuous Drain Current, V_{GS} @ 10V	24	
I_{DM}	Pulsed Drain Current ①	130	
P_D @T_A = 25°C	Power Dissipation ⑦	3.8	W
P_D @T_C = 25°C	Power Dissipation	170	
	Linear Derating Factor	1.1	W/°C
V_{GS}	Gate-to-Source Voltage	± 30	V
dv/dt	Peak Diode Recovery dv/dt ③	4.4	V/ns
T_J	Operating Junction and	-55 to + 175	°C
T_{STG}	Storage Temperature Range		
	Soldering Temperature, for 10 seconds	300 (1.6mm from case)	
	Mounting torqe, 6-32 or M3 screw⑥	10 lbf•in (1.1N•m)	

Typical SMPS Topologies

- Telecom 48V input Active Clamp Forward Converter

Notes ① through ⑦ are on page 11

7/21/04

找PDF 维库一下 pdf.dzsc.com

Static @ T_J = 25°C (unless otherwise specified)

	Parameter	Min.	Typ.	Max.	Units	Conditions
$V_{(BR)DSS}$	Drain-to-Source Breakdown Voltage	150	——	——	V	V_{GS} = 0V, I_D = 250μA
$\Delta V_{(BR)DSS}/\Delta T_J$	Breakdown Voltage Temp. Coefficient	——	0.18	——	V/°C	Reference to 25°C, I_D = 1mA ⑥
$R_{DS(on)}$	Static Drain-to-Source On-Resistance	——	——	0.056	Ω	V_{GS} = 10V, I_D = 20A ④
$V_{GS(th)}$	Gate Threshold Voltage	3.0	——	5.5	V	V_{DS} = V_{GS}, I_D = 250μA
I_{DSS}	Drain-to-Source Leakage Current	——	——	25	μA	V_{DS} = 150V, V_{GS} = 0V
		——	——	250		V_{DS} = 120V, V_{GS} = 0V, T_J = 150°C
I_{GSS}	Gate-to-Source Forward Leakage	——	——	100	nA	V_{GS} = 30V
	Gate-to-Source Reverse Leakage	——	——	-100		V_{GS} = -30V

Dynamic @ T_J = 25°C (unless otherwise specified)

	Parameter	Min.	Typ.	Max.	Units	Conditions
g_{fs}	Forward Transconductance	14	——	——	S	V_{DS} = 50V, I_D = 20A
Q_g	Total Gate Charge	——	60	90	nC	I_D = 20A
Q_{gs}	Gate-to-Source Charge	——	17	26		V_{DS} = 120V
Q_{gd}	Gate-to-Drain ("Miller") Charge	——	27	41		V_{GS} = 10V, ④⑥
$t_{d(on)}$	Turn-On Delay Time	——	13	——	ns	V_{DD} = 75V
t_r	Rise Time	——	38	——		I_D = 20A
$t_{d(off)}$	Turn-Off Delay Time	——	23	——		R_G = 3.6Ω
t_f	Fall Time	——	21	——		V_{GS} = 10VΩ ④
C_{iss}	Input Capacitance	——	2020	——	pF	V_{GS} = 0V
C_{oss}	Output Capacitance	——	400	——		V_{DS} = 25V
C_{rss}	Reverse Transfer Capacitance	——	91	——		f = 1.0MHz⑥
C_{oss}	Output Capacitance	——	2440	——		V_{GS} = 0V, V_{DS} = 1.0V, f = 1.0MHz
C_{oss}	Output Capacitance	——	180	——		V_{GS} = 0V, V_{DS} = 120V, f = 1.0MHz
C_{oss} eff.	Effective Output Capacitance	——	320	——		V_{GS} = 0V, V_{DS} = 0V to 120V ⑤

Avalanche Characteristics

	Parameter	Typ.	Max.	Units
E_{AS}	Single Pulse Avalanche Energy②⑥	——	330	mJ
I_{AR}	Avalanche Current①	——	20	A
E_{AR}	Repetitive Avalanche Energy①	——	17	mJ

Thermal Resistance

	Parameter	Typ.	Max.	Units
$R_{\theta JC}$	Junction-to-Case	——	0.90	°C/W
$R_{\theta CS}$	Case-to-Sink, Flat, Greased Surface ⑥	0.50	——	
$R_{\theta JA}$	Junction-to-Ambient⑥	——	62	
$R_{\theta JA}$	Junction-to-Ambient⑦	——	40	

Diode Characteristics

	Parameter	Min.	Typ.	Max.	Units	Conditions
I_S	Continuous Source Current (Body Diode)	——	——	33	A	MOSFET symbol showing the integral reverse p-n junction diode. 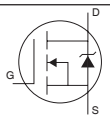
I_{SM}	Pulsed Source Current (Body Diode) ①⑥	——	——	130		
V_{SD}	Diode Forward Voltage	——	——	1.3	V	T_J = 25°C, I_S = 20A, V_{GS} = 0V ④
t_{rr}	Reverse Recovery Time	——	150	——	ns	T_J = 25°C, I_F = 20A
Q_{rr}	Reverse RecoveryCharge	——	920	——	nC	di/dt = 100A/μs ④
t_{on}	Forward Turn-On Time	Intrinsic turn-on time is negligible (turn-on is dominated by L_S+L_D)				

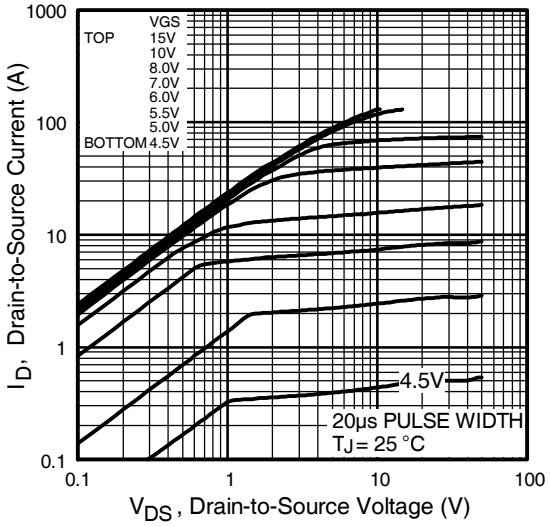

Fig 1. Typical Output Characteristics

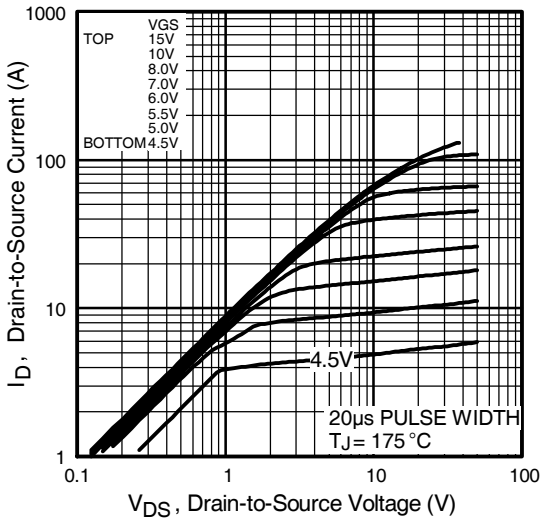

Fig 2. Typical Output Characteristics

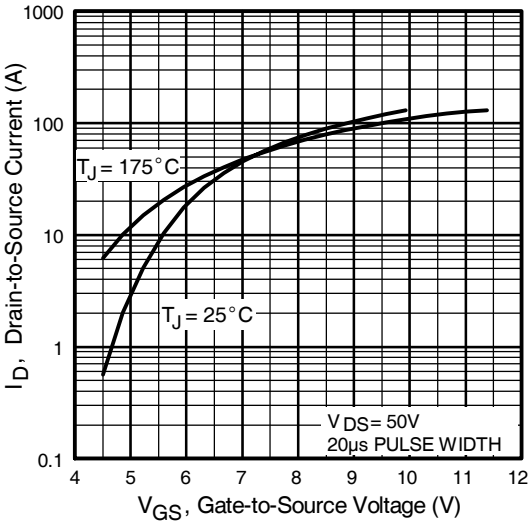

Fig 3. Typical Transfer Characteristics

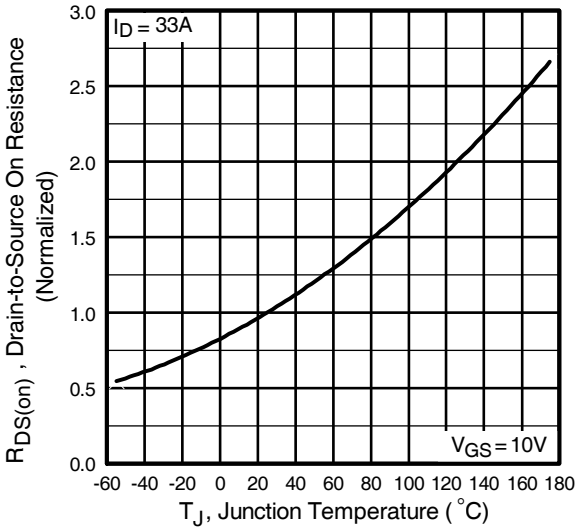

Fig 4. Normalized On-Resistance Vs. Temperature

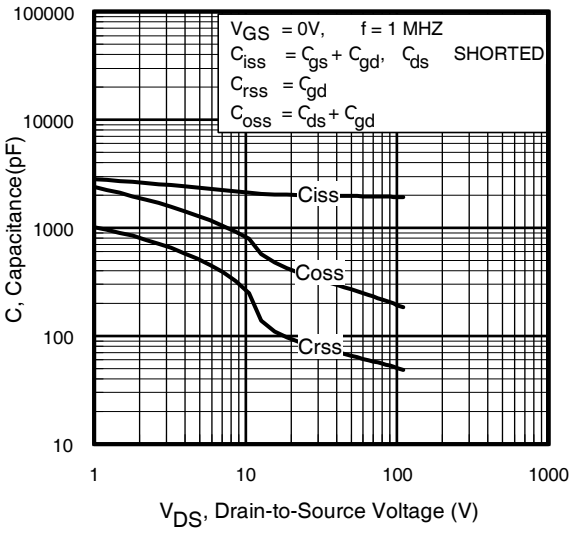

Fig 5. Typical Capacitance Vs. Drain-to-Source Voltage

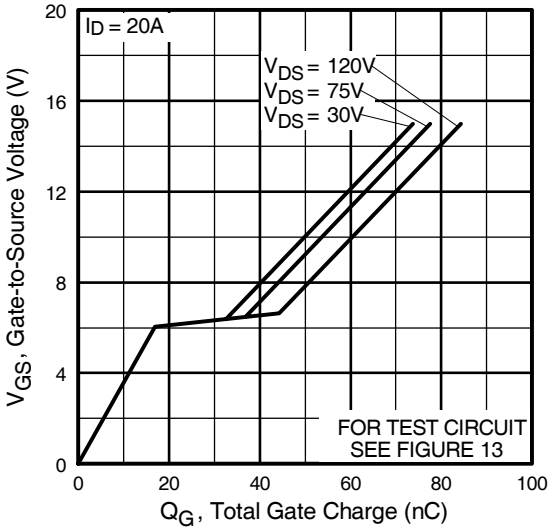

Fig 6. Typical Gate Charge Vs. Gate-to-Source Voltage

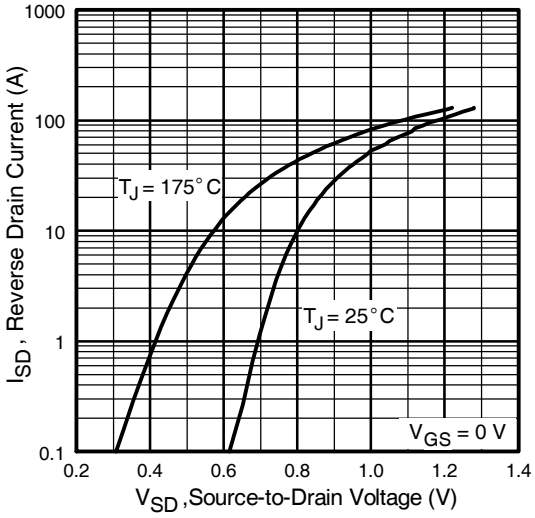

Fig 7. Typical Source-Drain Diode Forward Voltage

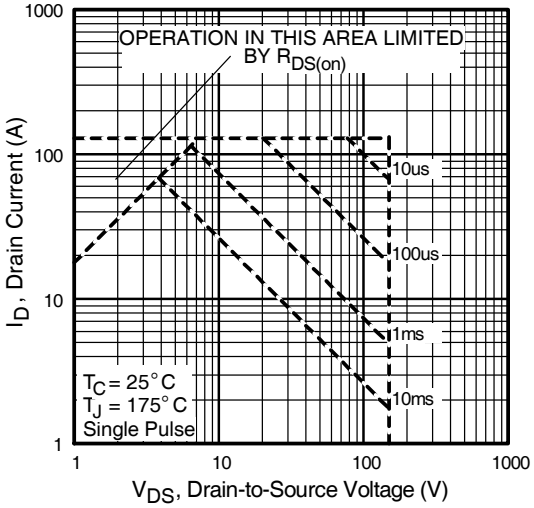

Fig 8. Maximum Safe Operating Area

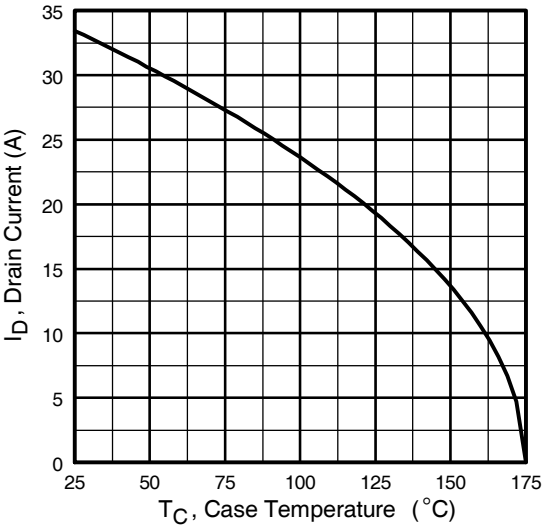

Fig 9. Maximum Drain Current Vs. Case Temperature

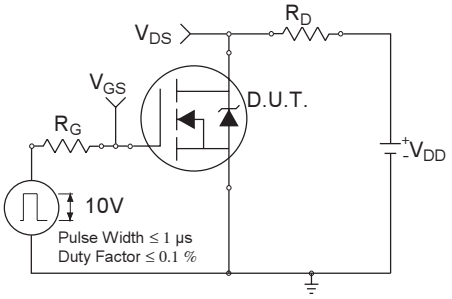

Fig 10a. Switching Time Test Circuit

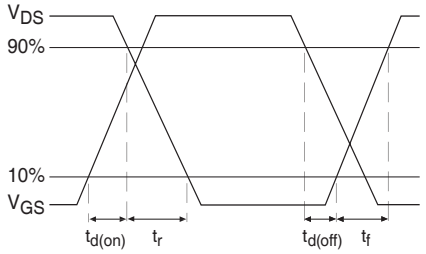

Fig 10b. Switching Time Waveforms

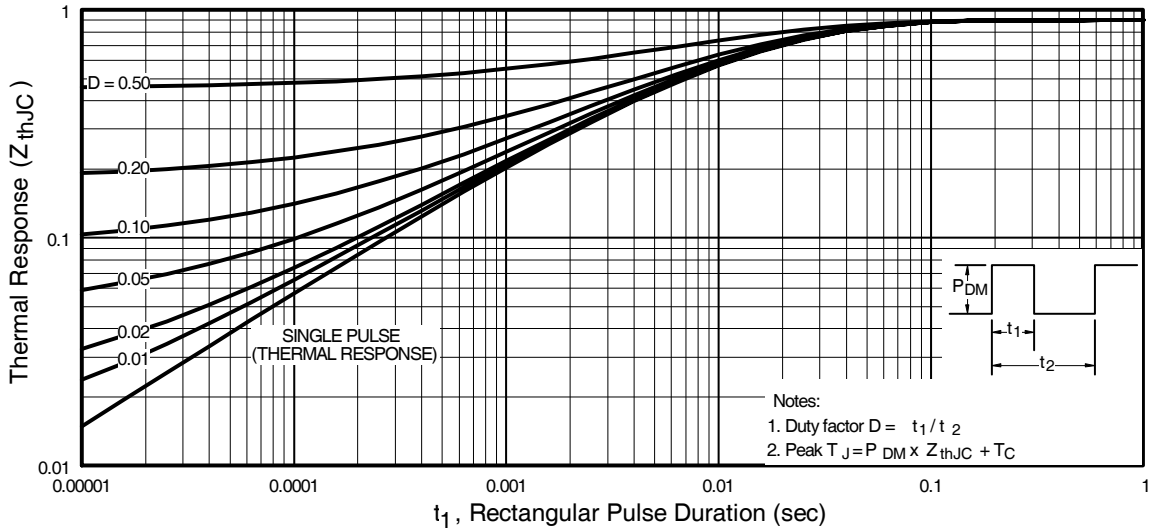

Fig 11. Maximum Effective Transient Thermal Impedance, Junction-to-Case

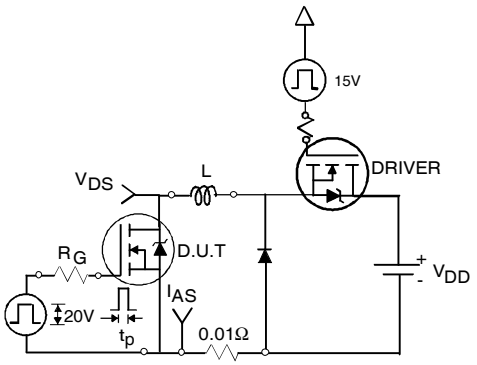

Fig 12a. Unclamped Inductive Test Circuit

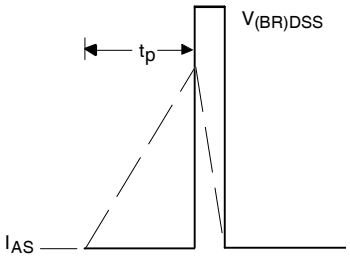

Fig 12b. Unclamped Inductive Waveforms

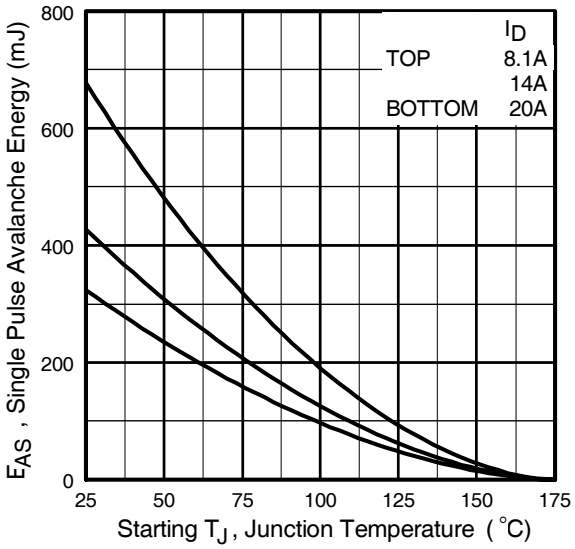

Fig 12c. Maximum Avalanche Energy Vs. Drain Current

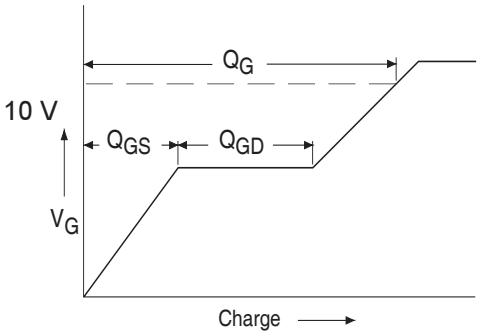

Fig 13a. Basic Gate Charge Waveform

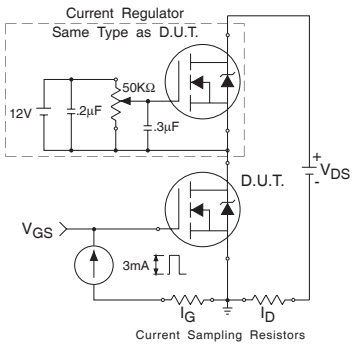

Fig 13b. Gate Charge Test Circuit

Peak Diode Recovery dv/dt Test Circuit

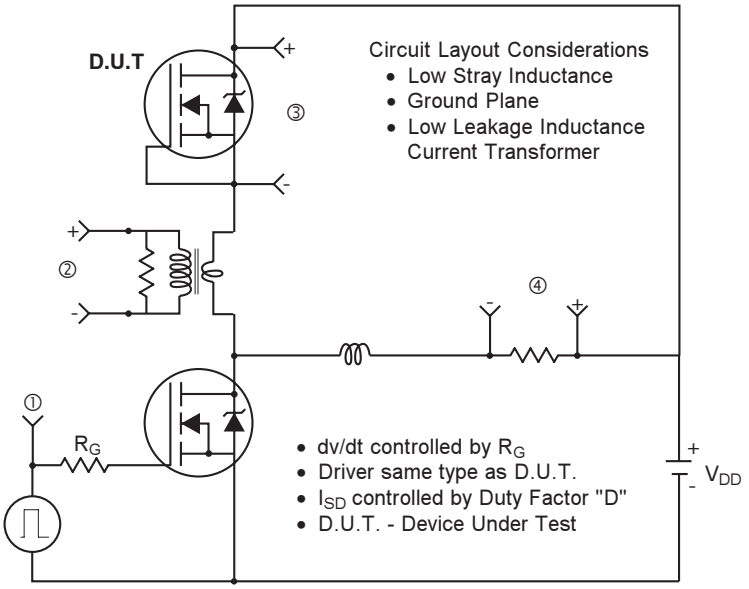

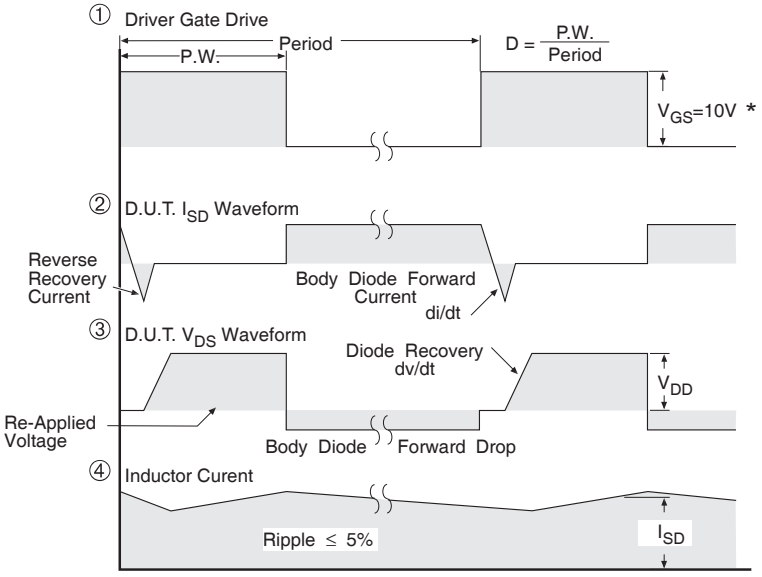

* V_{GS} = 5V for Logic Level Devices

Fig 14. For N-Channel HEXFET® Power MOSFETs

TO-220AB Package Outline

Dimensions are shown in millimeters (inches)

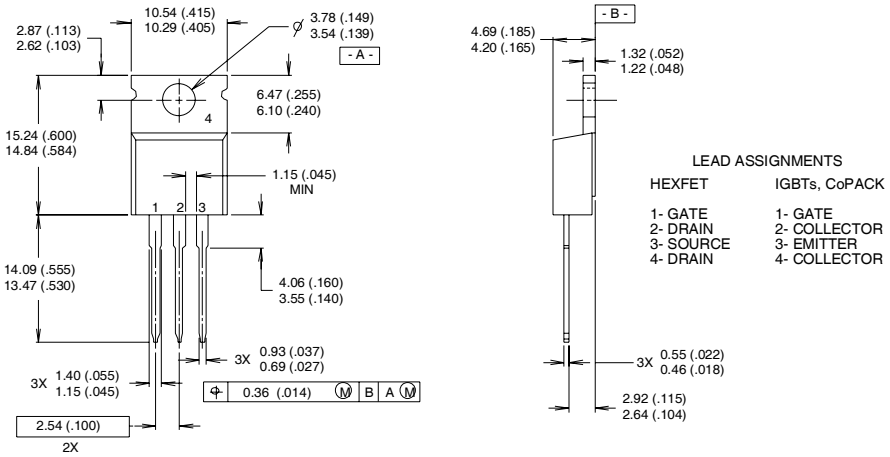

NOTES:

1 DIMENSIONING & TOLERANCING PER ANSI Y14.5M, 1982.
2 CONTROLLING DIMENSION : INCH
3 OUTLINE CONFORMS TO JEDEC OUTLINE TO-220AB.
4 HEATSINK & LEAD MEASUREMENTS DO NOT INCLUDE BURRS.

TO-220AB Part Marking Information

EXAMPLE: THIS IS AN IRF1010
LOT CODE 1789
ASSEMBLED ON WW 19, 1997
IN THE ASSEMBLY LINE "C"

Note: "P" in assembly line position indicates "Lead-Free"

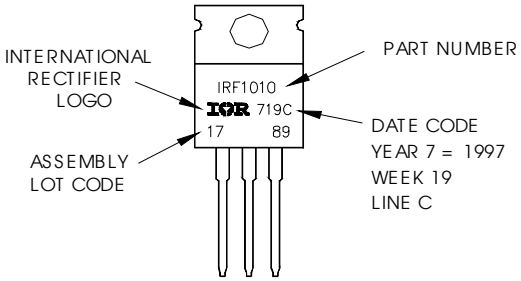

D^{2}Pak Package Outline

Dimensions are shown in millimeters (inches)

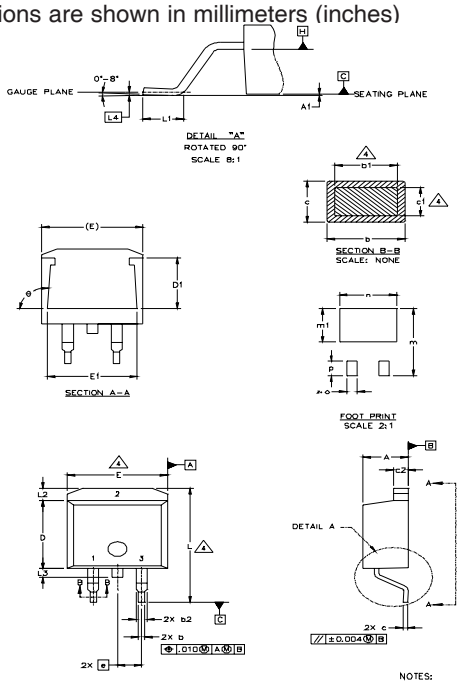

SYMBOL	DIMENSIONS MILLIMETERS MIN.	MILLIMETERS MAX.	INCHES MIN.	INCHES MAX.	NOTES
A	4.06	4.83	.160	.190	
A1		0.127		.005	
b	0.51	0.99	.020	.039	
b1	0.51	0.89	.020	.035	4
b2	1.14	1.40	.045	.055	
c	0.43	0.63	.017	.025	
c1	0.38	0.74	.015	.029	4
c2	1.14	1.40	.045	.055	
D	8.51	9.65	.335	.380	3
D1	5.33		.210		
E	9.65	10.67	.380	.420	3
E1	6.22		.245		
e	2.54 BSC		.100 BSC		
L	14.61	15.88	.575	.625	
L1	1.78	2.79	.070	.110	
L2		1.65		.065	
L3	1.27	1.78	.050	.070	
L4	0.25 BSC		.010 BSC		
m	17.78		.700		
m1	8.89		.350		
n	11.43		.450		
o	2.08		.082		
p	3.81		.150		
θ	90°	93°	90°	93°	

LEAD ASSIGNMENTS

HEXFET	IGBTs, CoPACK	DIODES
1.– GATE	1.– GATE	1.– ANODE *
2.– DRAIN	2.– COLLECTOR	2.– CATHODE
3.– SOURCE	3.– EMITTER	3.– ANODE

* PART DEPENDENT.

NOTES:

1. DIMENSIONING AND TOLERANCING PER ASME Y14.5M–1994
2. DIMENSIONS ARE SHOWN IN MILLIMETERS [INCHES].
3. DIMENSION D & E DO NOT INCLUDE MOLD FLASH. MOLD FLASH SHALL NOT EXCEED 0.127 [.005"] PER SIDE. THESE DIMENSIONS ARE MEASURED AT THE OUTMOST EXTREMES OF THE PLASTIC BODY.
4. DIMENSION b1 AND c1 APPLY TO BASE METAL ONLY.
5. CONTROLLING DIMENSION: INCH.

D^{2}Pak Part Marking Information (Lead-Free)

EXAMPLE: THIS IS AN IRF530S WITH
LOT CODE 8024
ASSEMBLED ON WW 02, 2000
IN THE ASSEMBLY LINE "L"

Note: "P" in assembly line position indicates "Lead-Free"

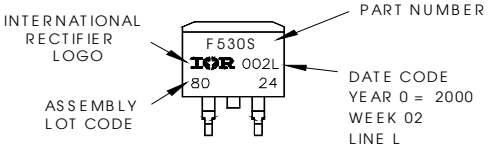

OR

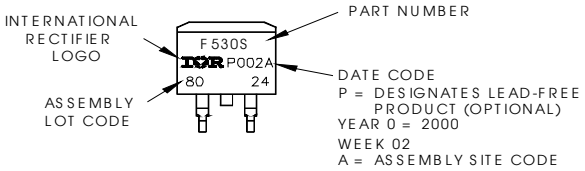

TO-262 Package Outline

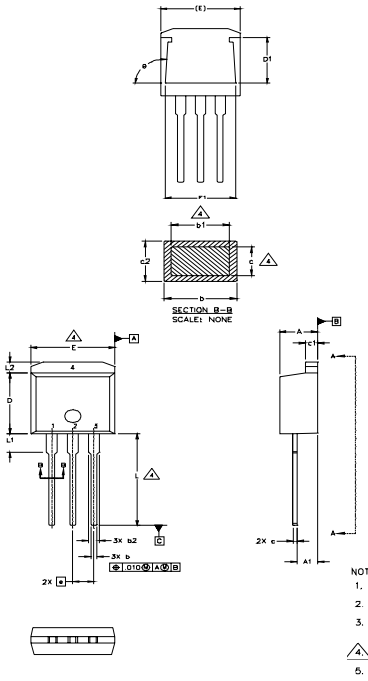

SYMBOL	DIMENSIONS				NOTES
	MILLIMETERS		INCHES		
	MIN.	MAX.	MIN.	MAX.	
A	4.06	4.83	.160	.190	
A1	2.03	2.92	.080	.115	
b	0.51	0.99	.020	.039	
b1	0.51	0.89	.020	.035	4
b2	1.14	1.40	.045	.055	
c	0.38	0.63	.015	.025	4
c1	1.14	1.40	.045	.055	
c2	0.43	.063	.017	.029	
D	8.51	9.65	.335	.380	3
D1	5.33		.210		
E	9.65	10.67	.380	.420	3
E1	6.22		.245		
e	2.54 BSC		.100 BSC		
L	13.46	14.09	.530	.555	
L1	3.56	3.71	.140	.146	
L2		1.65		.065	

LEAD ASSIGNMENTS

HEXFET
1.– GATE
2.– DRAIN
3.– SOURCE
4.– DRAIN

IGBT
1 – GATE
2 – COLLECTOR
3 – EMITTER

NOTES:
1. DIMENSIONING AND TOLERANCING PER ASME Y14.5M–1994
2. DIMENSIONS ARE SHOWN IN MILLIMETERS [INCHES].
3. DIMENSION D & E DO NOT INCLUDE MOLD FLASH. MOLD FLASH SHALL NOT EXCEED 0.127 [.005"] PER SIDE. THESE DIMENSIONS ARE MEASURED AT THE OUTMOST EXTREMES OF THE PLASTIC BODY.
4. DIMENSION b1 AND c1 APPLY TO BASE METAL ONLY.
5. CONTROLLING DIMENSION: INCH.

TO-262 Part Marking Information

EXAMPLE: THIS IS AN IRL3103L
LOT CODE 1789
ASSEMBLED ON WW 19, 1997
IN THE ASSEMBLY LINE "C"

Note: "P" in assembly line position indicates "Lead-Free"

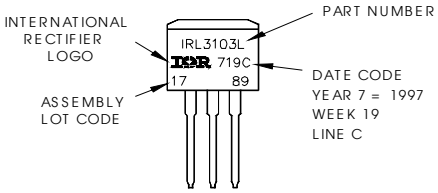

OR

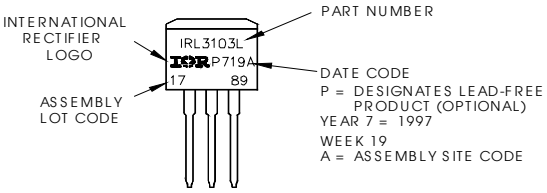

D²Pak Tape & Reel Infomation

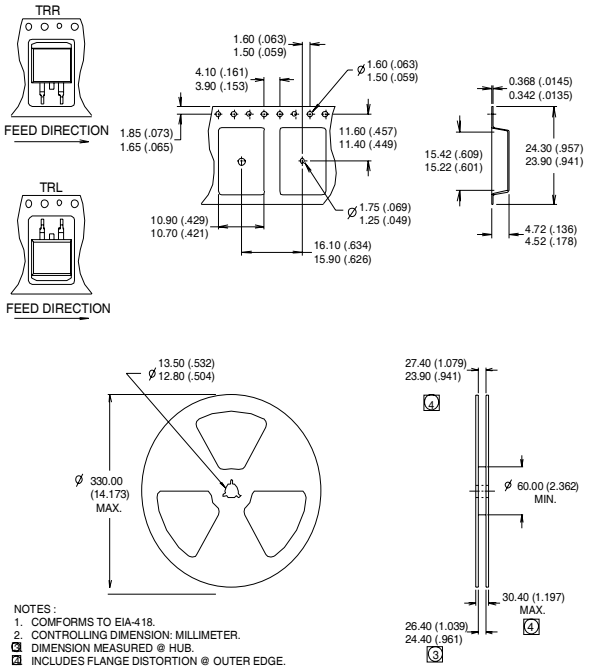

Notes:

① Repetitive rating; pulse width limited by max. junction temperature.

② Starting $T_J = 25°C$, L = 1.7mH $R_G = 25\Omega$, $I_{AS} = 20A$.

③ $I_{SD} \leq 20A$, di/dt $\leq$ 280A/µs, $V_{DD} \leq V_{(BR)DSS}$, $T_J \leq 175°C$

④ Pulse width $\leq$ 300µs; duty cycle $\leq$ 2%.

⑤ C_{oss} eff. is a fixed capacitance that gives the same charging time as C_{oss} while V_{DS} is rising from 0 to 80% V_{DSS}

⑥ This is only applied to TO-220AB package

⑦ This is applied to D²Pak, when mounted on 1" square PCB (FR-4 or G-10 Material). For recommended footprint and soldering techniques refer to application note #AN-994.

Data and specifications subject to change without notice.

International
IOR Rectifier

IR WORLD HEADQUARTERS: 233 Kansas St., El Segundo, California 90245, USA Tel: (310) 252-7105
TAC Fax: (310) 252-7903
Visit us at www.irf.com for sales contact information.07/04

Note: For the most current drawings please refer to the IR website at:
http://www.irf.com/package/