查询IRF3305PBF供应商 捷多邦，专业PCB打样工厂，24小时加急出货

PD - 95758

International
IOR Rectifier

AUTOMOTIVE MOSFET

IRF3305PbF

HEXFET® Power MOSFET

Features

- Designed to support Linear Gate Drive Applications
- 175°C Operating Temperature
- Low Thermal Resistance Junction - Case
- Rugged Process Technology and Design
- Fully Avalanche Rated
- Lead-Free

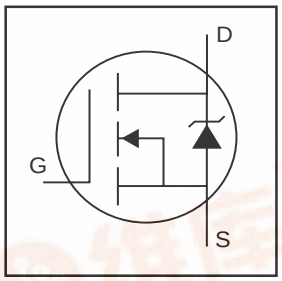

V_{DSS} = 55V

$R_{DS(on)}$ = 8.0mΩ

I_D = 75A

Description

Specifically designed for use in **linear** automotive applications this HEXFET Power MOSFET utilizes a rugged planar process technology and device design, which greatly improves the Safe Operating Area (SOA) of the device. These features, coupled with 175°C junction operating temperature and low thermal resistance of 0.45C/W make the IRF3305 an ideal device for linear automotive applications.

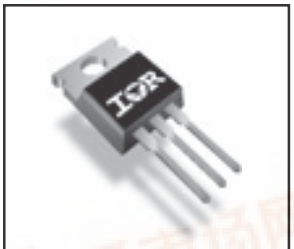

TO-220AB

Absolute Maximum Ratings

	Parameter	Max.	Units
I_D @ T_C = 25°C	Continuous Drain Current, V_{GS} @ 10V (Silicon Limited)	140	A
I_D @ T_C = 100°C	Continuous Drain Current, V_{GS} @ 10V	99	
I_D @ T_C = 25°C	Continuous Drain Current, V_{GS} @ 10V (Package Limited)	75	
I_{DM}	Pulsed Drain Current ①	560	
P_D @T_C = 25°C	Power Dissipation	330	W
	Linear Derating Factor	2.2	W/°C
V_{GS}	Gate-to-Source Voltage	± 20	V
$E_{AS\ (Thermally\ limited)}$	Single Pulse Avalanche Energy②	470	mJ
E_{AS} (Tested)	Single Pulse Avalanche Energy Tested Value ⑥	860	
I_{AR}	Avalanche Current ①	See Fig.12a, 12b, 15, 16	A
E_{AR}	Repetitive Avalanche Energy ⑤		mJ
T_J T_{STG}	Operating Junction and Storage Temperature Range	-55 to + 175	°C
	Soldering Temperature, for 10 seconds	300 (1.6mm from case)	
	Mounting Torque, 6-32 or M3 screw	10 lbf•in (1.1N•m)	

Thermal Resistance

	Parameter	Typ.	Max.	Units
$R_{\theta JC}$	Junction-to-Case ⑦	——	0.45	°C/W
$R_{\theta CS}$	Case-to-Sink, Flat, Greased Surface	0.50	——	
$R_{\theta JA}$	Junction-to-Ambient ⑦	——	62	

8/24/04

找PDF 维库一下 pdf.dzsc.com

Electrical Characteristics @ T_J = 25°C (unless otherwise specified)

	Parameter	Min.	Typ.	Max.	Units	Conditions
$V_{(BR)DSS}$	Drain-to-Source Breakdown Voltage	55	——	——	V	V_{GS} = 0V, I_D = 250µA
$\Delta V_{(BR)DSS}/\Delta T_J$	Breakdown Voltage Temp. Coefficient	——	0.055	——	V/°C	Reference to 25°C, I_D = 1mA
$R_{DS(on)}$	Static Drain-to-Source On-Resistance	——	——	8.0	mΩ	V_{GS} = 10V, I_D = 75A ③
$V_{GS(th)}$	Gate Threshold Voltage	2.0	——	4.0	V	V_{DS} = V_{GS}, I_D = 250µA
gfs	Forward Transconductance	41	——	——	S	V_{DS} = 25V, I_D = 75A
I_{DSS}	Drain-to-Source Leakage Current	——	——	25	µA	V_{DS} = 55V, V_{GS} = 0V
		——	——	250		V_{DS} = 55V, V_{GS} = 0V, T_J = 125°C
I_{GSS}	Gate-to-Source Forward Leakage	——	——	200	nA	V_{GS} = 20V
	Gate-to-Source Reverse Leakage	——	——	-200		V_{GS} = -20V
Q_g	Total Gate Charge	——	100	150		I_D = 75A
Q_{gs}	Gate-to-Source Charge	——	21	——	nC	V_{DS} = 44V
Q_{gd}	Gate-to-Drain ("Miller") Charge	——	45	——		V_{GS} = 10V ③
$t_{d(on)}$	Turn-On Delay Time	——	16	——		V_{DD} = 28V
t_r	Rise Time	——	88	——		I_D = 75A
$t_{d(off)}$	Turn-Off Delay Time	——	43	——	ns	R_G = 2.6 Ω
t_f	Fall Time	——	34	——		V_{GS} = 10V ③
L_D	Internal Drain Inductance	——	4.5	——	nH	Between lead, 6mm (0.25in.)
L_S	Internal Source Inductance	——	7.5	——		from package and center of die contact
C_{iss}	Input Capacitance	——	3650	——		V_{GS} = 0V
C_{oss}	Output Capacitance	——	1230	——		V_{DS} = 25V
C_{rss}	Reverse Transfer Capacitance	——	450	——	pF	ƒ = 1.0MHz
C_{oss}	Output Capacitance	——	4720	——		V_{GS} = 0V, V_{DS} = 1.0V, ƒ = 1.0MHz
C_{oss}	Output Capacitance	——	930	——		V_{GS} = 0V, V_{DS} = 44V, ƒ = 1.0MHz
C_{oss} eff.	Effective Output Capacitance	——	1490	——		V_{GS} = 0V, V_{DS} = 0V to 44V ④

Source-Drain Ratings and Characteristics

	Parameter	Min.	Typ.	Max.	Units	Conditions
I_S	Continuous Source Current (Body Diode)	——	——	75	A	MOSFET symbol showing the integral reverse p-n junction diode. 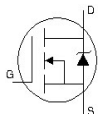
I_{SM}	Pulsed Source Current (Body Diode) ①	——	——	560		
V_{SD}	Diode Forward Voltage	——	——	1.3	V	T_J = 25°C, I_S = 75A, V_{GS} = 0V ③
t_{rr}	Reverse Recovery Time	——	57	86	ns	T_J = 25°C, I_F = 75A, V_{DD} = 28V
Q_{rr}	Reverse Recovery Charge	——	130	190	nC	di/dt = 100A/µs ③
t_{on}	Forward Turn-On Time	Intrinsic turn-on time is negligible (turn-on is dominated by LS+LD)				

Notes:

① Repetitive rating; pulse width limited by max. junction temperature. (See fig. 11).

② Limited by T_{Jmax}, starting T_J = 25°C, L = 0.17mH R_G = 25Ω, I_{AS} = 75A, V_{GS} =10V. Part not recommended for use above this value.

③ Pulse width ≤ 1.0ms; duty cycle ≤ 2%.

④ C_{oss} eff. is a fixed capacitance that gives the same charging time as C_{oss} while V_{DS} is rising from 0 to 80% V_{DSS} .

④ C_{oss} eff. is a fixed capacitance that gives the same charging time as C_{oss} while V_{DS} is rising from 0 to 80% V_{DSS} .

⑤ Limited by T_{Jmax} , see Fig.12a, 12b, 15, 16 for typical repetitive avalanche performance.

⑥ This value determined from sample failure population. 100% tested to this value in production.

⑦ R_θ is measured at T_J of approximately 90°C.

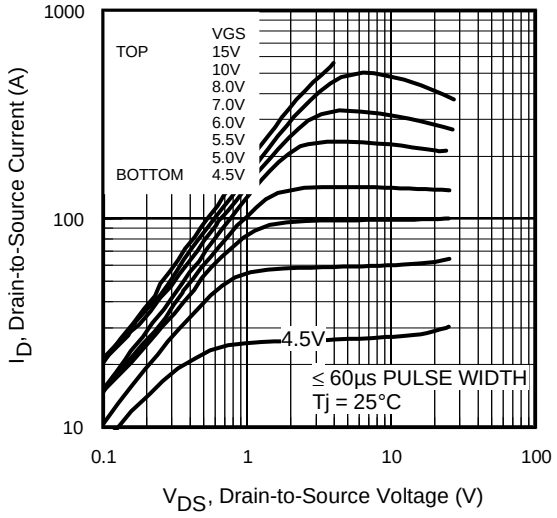

Fig 1. Typical Output Characteristics

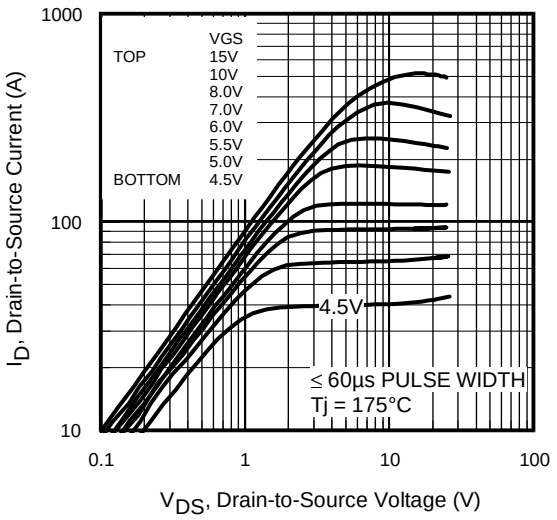

Fig 2. Typical Output Characteristics

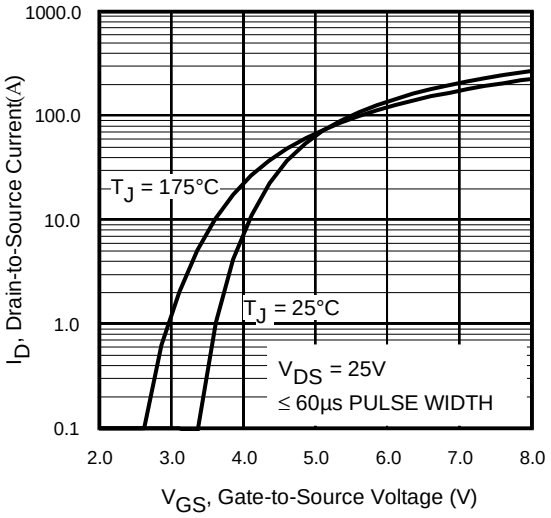

Fig 3. Typical Transfer Characteristics

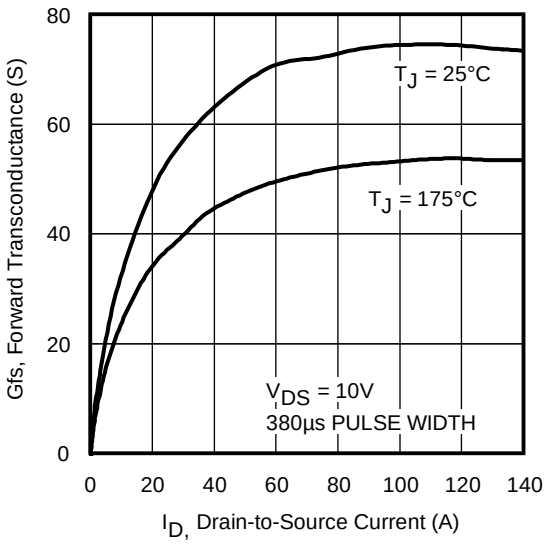

Fig 4. Typical Forward Transconductance Vs. Drain Current

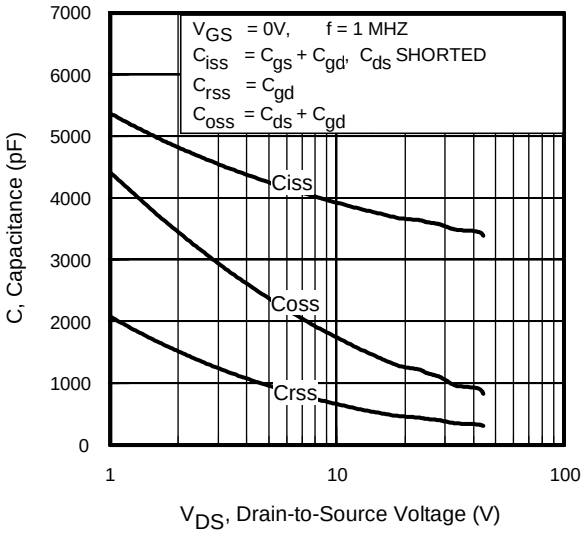

Fig 5. Typical Capacitance Vs. Drain-to-Source Voltage

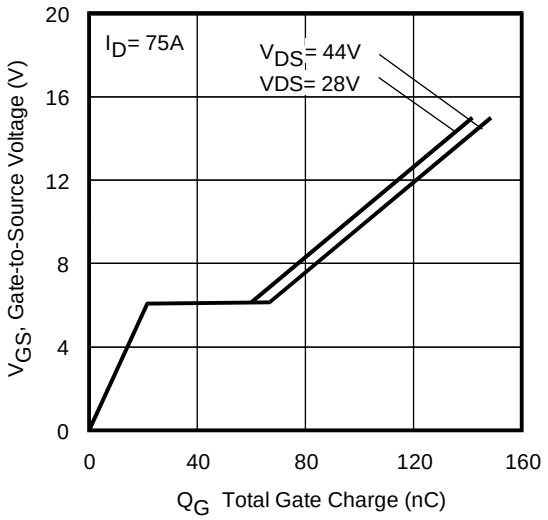

Fig 6. Typical Gate Charge Vs. Gate-to-Source Voltage

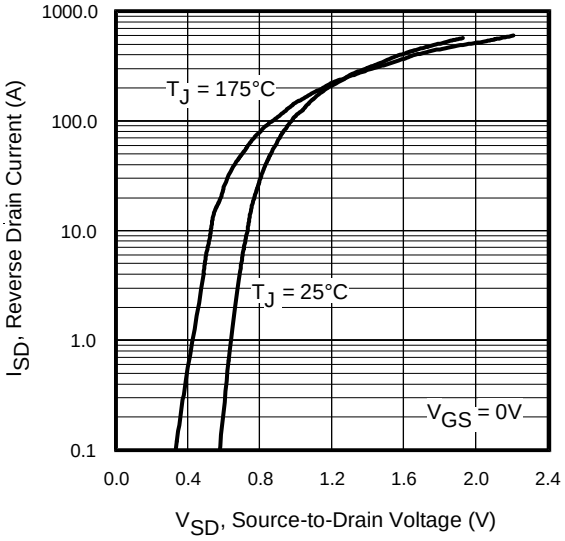

Fig 7. Typical Source-Drain Diode Forward Voltage

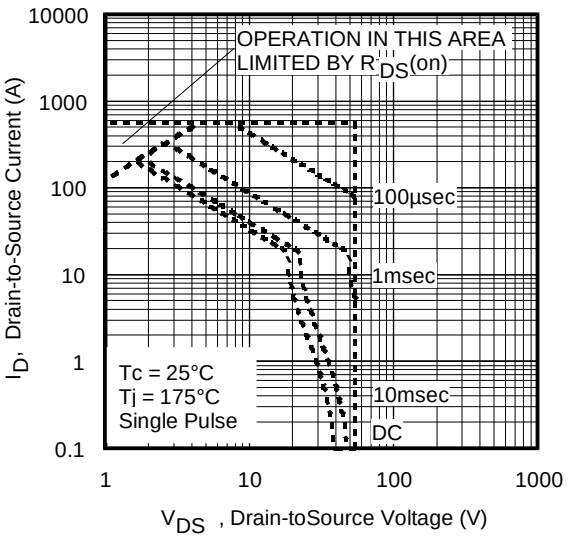

Fig 8. Maximum Safe Operating Area

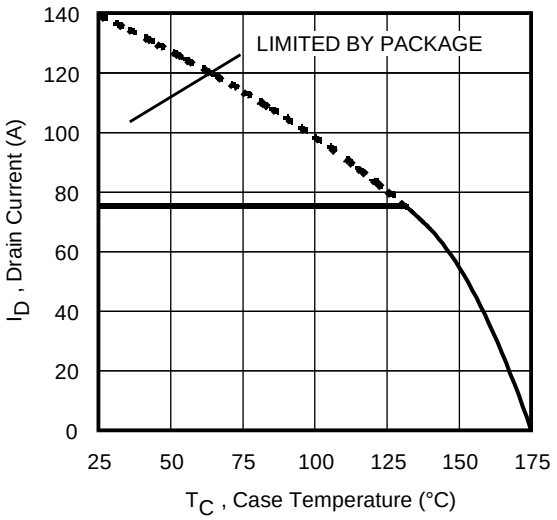

Fig 9. Maximum Drain Current Vs. Case Temperature

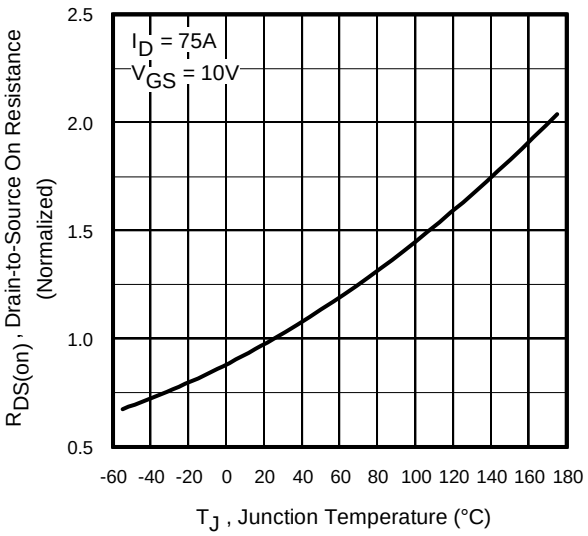

Fig 10. Normalized On-Resistance Vs. Temperature

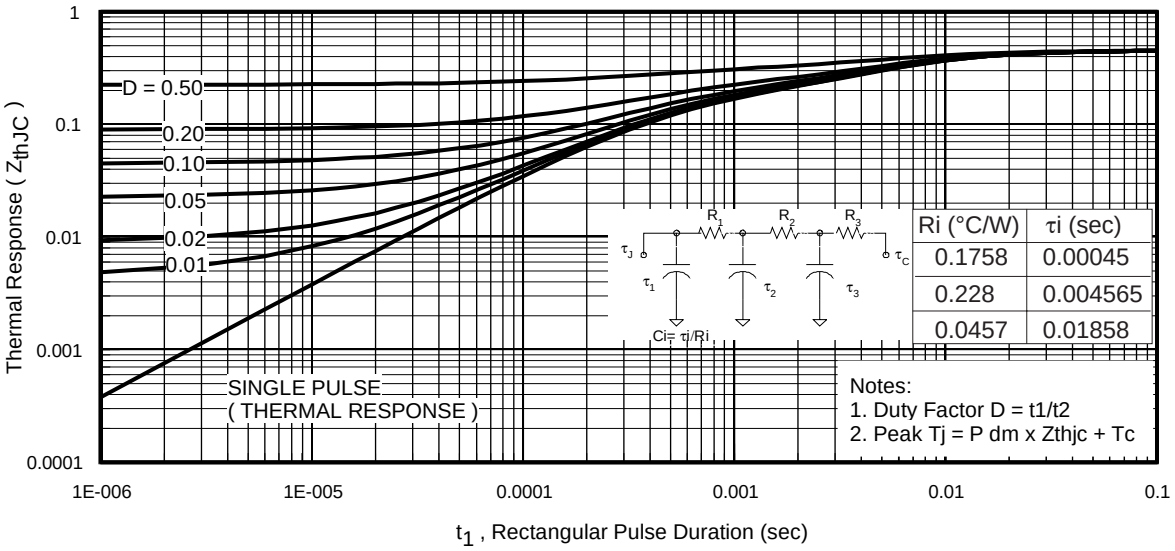

Fig 11. Maximum Effective Transient Thermal Impedance, Junction-to-Case

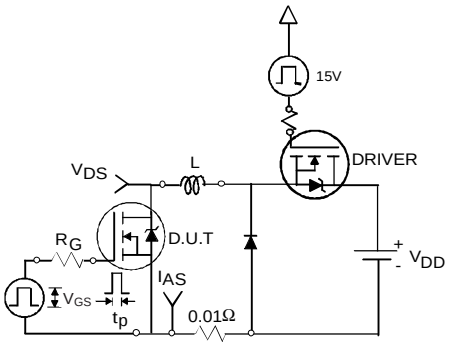

Fig 12a. Unclamped Inductive Test Circuit

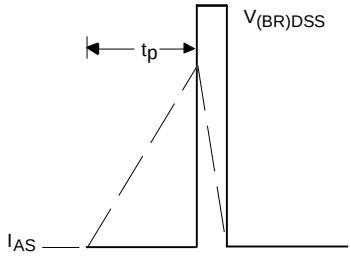

Fig 12b. Unclamped Inductive Waveforms

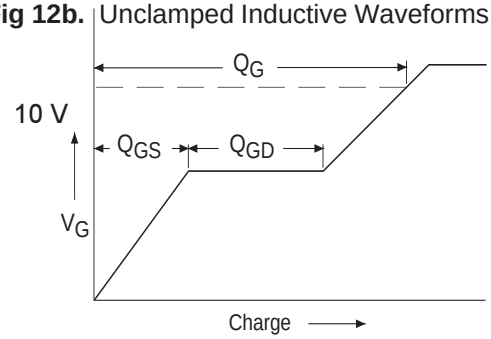

Fig 13a. Basic Gate Charge Waveform

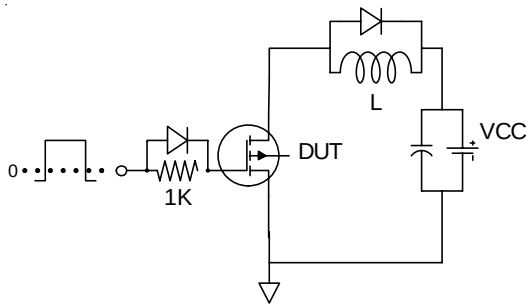

Fig 13b. Gate Charge Test Circuit

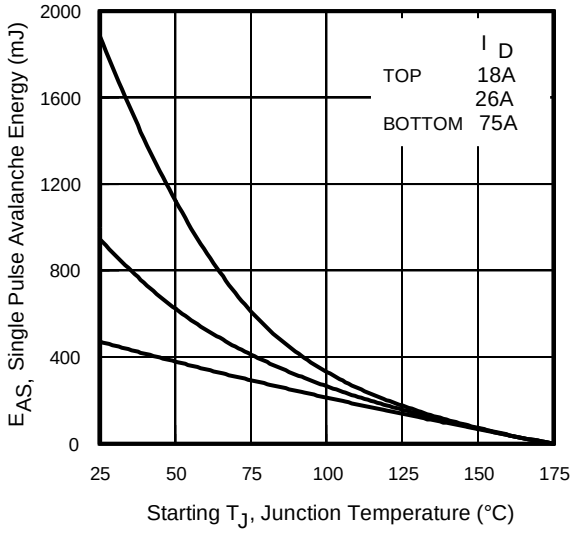

Fig 12c. Maximum Avalanche Energy Vs. Drain Current

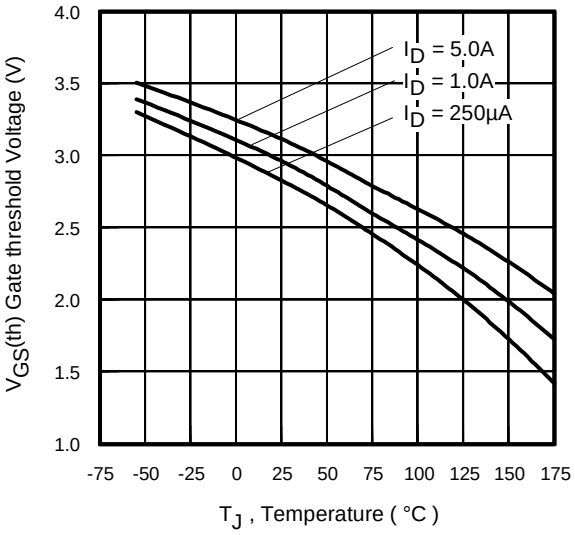

Fig 14. Threshold Voltage Vs. Temperature

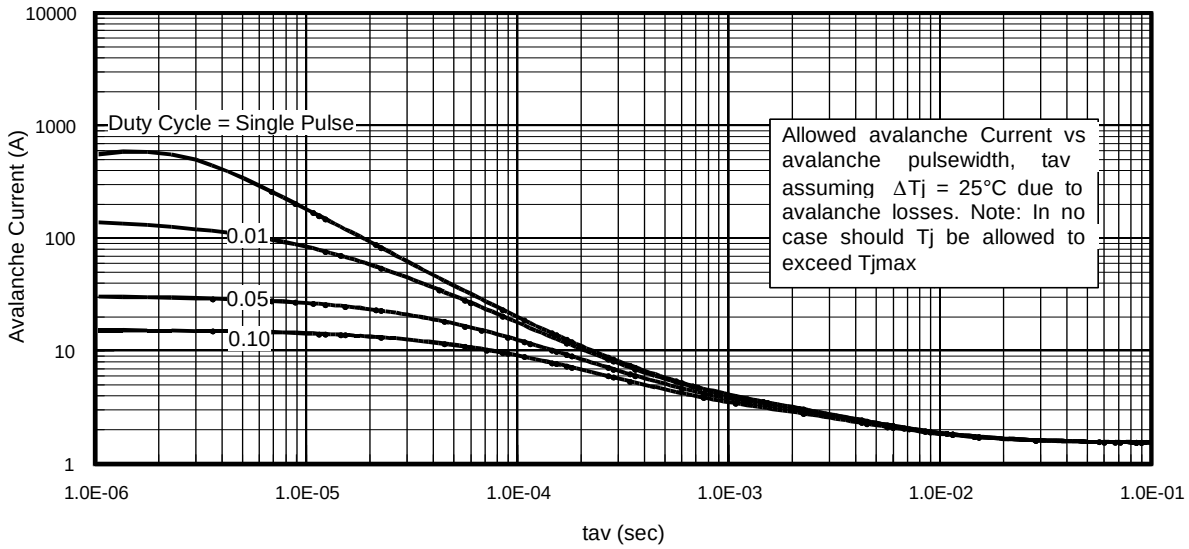

Fig 15. Typical Avalanche Current Vs.Pulsewidth

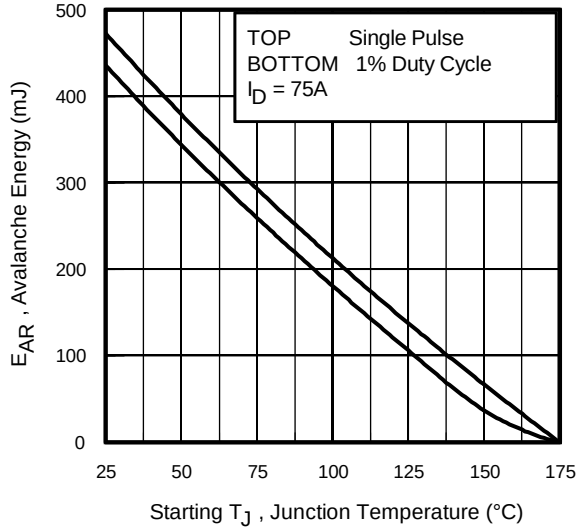

Fig 16. Maximum Avalanche Energy Vs. Temperature

Notes on Repetitive Avalanche Curves , Figures 15, 16:
(For further info, see AN-1005 at www.irf.com)

1. Avalanche failures assumption:
   Purely a thermal phenomenon and failure occurs at a temperature far in excess of T_{jmax}. This is validated for every part type.
2. Safe operation in Avalanche is allowed as long as T_{jmax} is not exceeded.
3. Equation below based on circuit and waveforms shown in Figures 12a, 12b.
4. $P_{D\ (ave)}$ = Average power dissipation per single avalanche pulse.
5. BV = Rated breakdown voltage (1.3 factor accounts for voltage increase during avalanche).
6. I_{av} = Allowable avalanche current.
7. ΔT = Allowable rise in junction temperature, not to exceed T_{jmax} (assumed as 25°C in Figure 15, 16).
   t_{av} = Average time in avalanche.
   D = Duty cycle in avalanche = $t_{av} \cdot f$
   $Z_{thJC}(D, t_{av})$ = Transient thermal resistance, see figure 11)

$$P_{D\ (ave)} = 1/2\ (1.3 \cdot BV \cdot I_{av}) = \Delta T / Z_{thJC}$$
$$I_{av} = 2\Delta T / [1.3 \cdot BV \cdot Z_{th}]$$
$$E_{AS\ (AR)} = P_{D\ (ave)} \cdot t_{av}$$

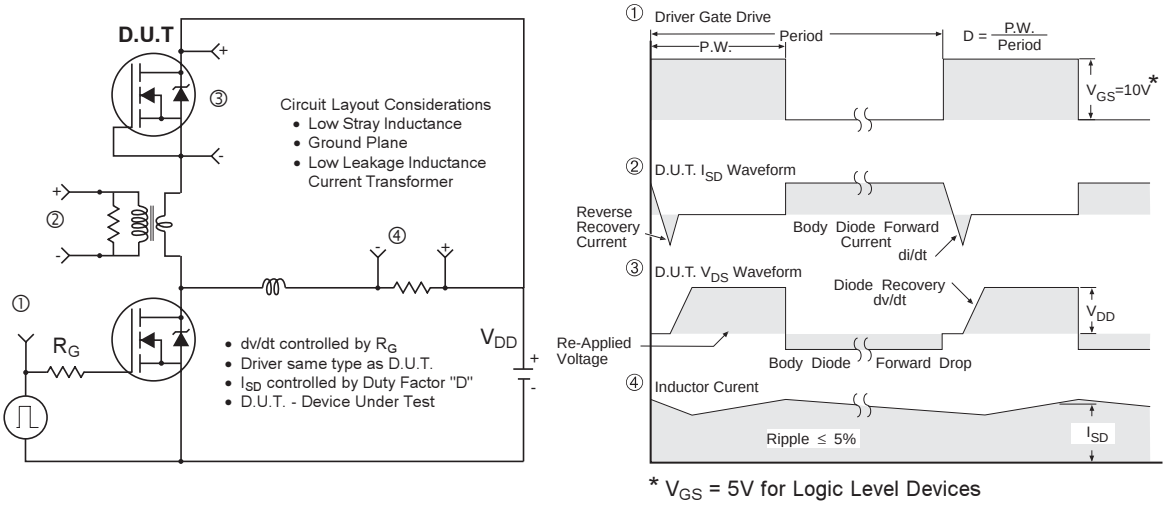

Fig 17. Peak Diode Recovery dv/dt Test Circuit for N-Channel HEXFET® Power MOSFETs

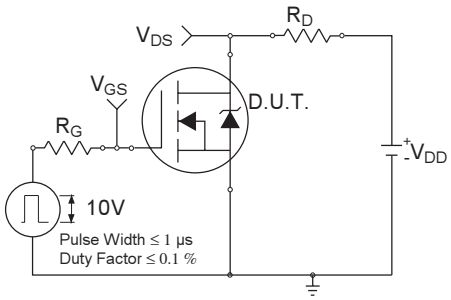

Fig 18a. Switching Time Test Circuit

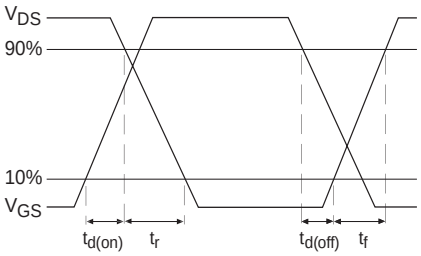

Fig 18b. Switching Time Waveforms

TO-220AB Package Outline

Dimensions are shown in millimeters (inches)

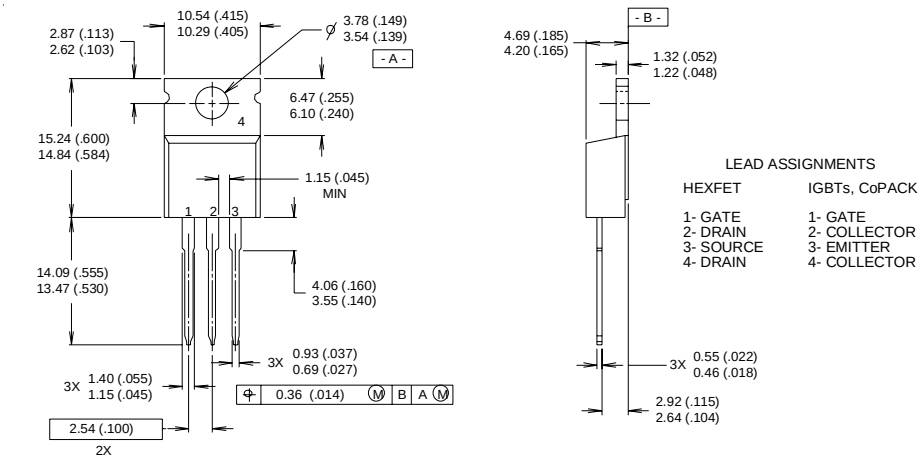

NOTES:

1 DIMENSIONING & TOLERANCING PER ANSI Y14.5M, 1982.
2 CONTROLLING DIMENSION : INCH
3 OUTLINE CONFORMS TO JEDEC OUTLINE TO-220AB.
4 HEATSINK & LEAD MEASUREMENTS DO NOT INCLUDE BURRS.

TO-220AB Part Marking Information

EXAMPLE: THIS IS AN IRF1010
LOT CODE 1789
ASSEMBLED ON WW 19, 1997
IN THE ASSEMBLY LINE "C"

Note: "P" in assembly line position indicates "Lead-Free"

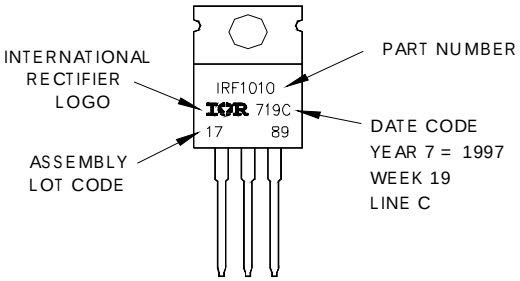

TO-220AB package is not recommended for Surface Mount Application.

Data and specifications subject to change without notice.
This product has been designed and qualified for the Automotive [Q101]market.
Qualification Standards can be found on IR's Web site.

International
IOR Rectifier

IR WORLD HEADQUARTERS: 233 Kansas St., El Segundo, California 90245, USA Tel: (310) 252-7105
TAC Fax: (310) 252-7903
Visit us at www.irf.com for sales contact information. 08/04

Note: For the most current drawings please refer to the IR website at:
http://www.irf.com/package/