International
IOR Rectifier

PD-96091

IRLR024PbF
IRLU024PbF

HEXFET® Power MOSFET

- Dynamic dv/dt Rating
- Surface Mount (IRLR024)
- Straight Lead (IRLU024)
- Available in Tape & Reel
- Logic-Level Gate Drive
- $R_{DS(on)}$ Specified at V_{GS}=4V & 5V
- Fast Switching
- Lead-Free

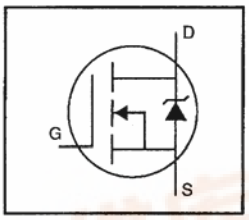

V_{DSS} = 60V

$R_{DS(on)}$ = 0.10Ω

I_D = 14A

Description

Third Generation HEXFETs from International Rectifier provide the designer with the best combination of fast switching, ruggedized device design, low on-resistance and cost-effectiveness.

The D-Pak is designed for surface mounting using vapor phase, infrared, or wave soldering techniques. The straight lead version (IRFU series) is for through-hole mounting applications. Power dissipation levels up to 1.5 watts are possible in typical surface mount applications.

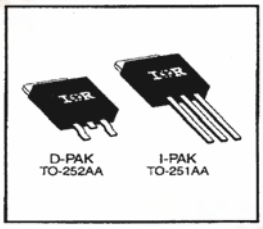

Absolute Maximum Ratings

	Parameter	Max.	Units
I_D @ T_C = 25°C	Continuous Drain Current, V_{GS} @ 5.0 V	14	A
I_D @ T_C = 100°C	Continuous Drain Current, V_{GS} @ 5.0 V	9.2	
I_{DM}	Pulsed Drain Current ①	56	
P_D @ T_C = 25°C	Power Dissipation	42	W
P_D @ T_A = 25°C	Power Dissipation (PCB Mount)**	2.5	
	Linear Derating Factor	0.33	W/°C
	Linear Derating Factor (PCB Mount)**	0.020	
V_{GS}	Gate-to-Source Voltage	±10	V
E_{AS}	Single Pulse Avalanche Energy ②	91	mJ
dv/dt	Peak Diode Recovery dv/dt ③	4.5	V/ns
T_J, T_{STG}	Junction and Storage Temperature Range	-55 to +150	°C
	Soldering Temperature, for 10 seconds	260 (1.6mm from case)	

Thermal Resistance

	Parameter	Min.	Typ.	Max.	Units
$R_{\theta JC}$	Junction-to-Case	—	—	3.0	°C/W
$R_{\theta JA}$	Junction-to-Ambient (PCB mount)**	—	—	50	
$R_{\theta JA}$	Junction-to-Ambient	—	—	110	

** When mounted on 1" square PCB (FR-4 or G-10 Material).
For recommended footprint and soldering techniques refer to application note #AN-994.

08/01/06

Electrical Characteristics @ T_J = 25°C (unless otherwise specified)

	Parameter	Min.	Typ.	Max.	Units	Test Conditions
$V_{(BR)DSS}$	Drain-to-Source Breakdown Voltage	60	—	—	V	V_{GS}=0V, I_D= 250μA
$\Delta V_{(BR)DSS}/\Delta T_J$	Breakdown Voltage Temp. Coefficient	—	0.068	—	V/°C	Reference to 25°C, I_D= 1mA
$R_{DS(on)}$	Static Drain-to-Source On-Resistance	—	—	0.10	Ω	V_{GS}=5.0V, I_D=8.4A ④
		—	—	0.14		V_{GS}=4.0V, I_D=7.0A ④
$V_{GS(th)}$	Gate Threshold Voltage	1.0	—	2.0	V	V_{DS}=V_{GS}, I_D= 250μA
g_{fs}	Forward Transconductance	7.3	—	—	S	V_{DS}=25V, I_D=8.4A ④
I_{DSS}	Drain-to-Source Leakage Current	—	—	25	μA	V_{DS}=60V, V_{GS}=0V
		—	—	250		V_{DS}=48V, V_{GS}=0V, T_J=125°C
I_{GSS}	Gate-to-Source Forward Leakage	—	—	100	nA	V_{GS}=10V
	Gate-to-Source Reverse Leakage	—	—	-100		V_{GS}=-10V
Q_g	Total Gate Charge	—	—	18	nC	I_D=17A
Q_{gs}	Gate-to-Source Charge	—	—	4.5		V_{DS}=48V
Q_{gd}	Gate-to-Drain ("Miller") Charge	—	—	12		V_{GS}=5.0V See Fig. 6 and 13 ④
$t_{d(on)}$	Turn-On Delay Time	—	11	—	ns	V_{DD}=30V
t_r	Rise Time	—	110	—		I_D=17A
$t_{d(off)}$	Turn-Off Delay Time	—	23	—		R_G=9.0Ω
t_f	Fall Time	—	41	—		R_D=1.7Ω See Figure 10 ④
L_D	Internal Drain Inductance	—	4.5	—	nH	Between lead, 6 mm (0.25in.) from package and center of die contact 
L_S	Internal Source Inductance	—	7.5	—		
C_{iss}	Input Capacitance	—	870	—	pF	V_{GS}=0V
C_{oss}	Output Capacitance	—	360	—		V_{DS}=25V
C_{rss}	Reverse Transfer Capacitance	—	53	—		f=1.0MHz See Figure 5

Source-Drain Ratings and Characteristics

	Parameter	Min.	Typ.	Max.	Units	Test Conditions
I_S	Continuous Source Current (Body Diode)	—	—	14	A	MOSFET symbol showing the integral reverse p-n junction diode. 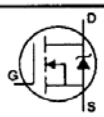
I_{SM}	Pulsed Source Current (Body Diode) ①	—	—	56		
V_{SD}	Diode Forward Voltage	—	—	1.5	V	T_J=25°C, I_S=14A, V_{GS}=0V ④
t_{rr}	Reverse Recovery Time	—	130	260	ns	T_J=25°C, I_F=17A
Q_{rr}	Reverse Recovery Charge	—	0.75	1.5	μC	di/dt=100A/μs ④
t_{on}	Forward Turn-On Time	Intrinsic turn-on time is neglegible (turn-on is dominated by L_S+L_D)				

Notes:

① Repetitive rating; pulse width limited by max. junction temperature (See Figure 11)

② V_{DD}=25V, starting T_J=25°C, L=541μH R_G=25Ω, I_{AS}=14A (See Figure 12)

③ I_{SD}≤17A, di/dt≤140A/μs, V_{DD}≤$V_{(BR)DSS}$, T_J≤150°C

④ Pulse width ≤ 300 μs; duty cycle ≤2%.

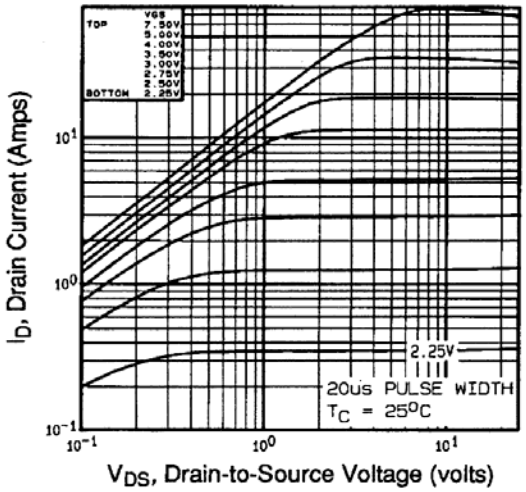

Fig 1. Typical Output Characteristics, T_C=25°C

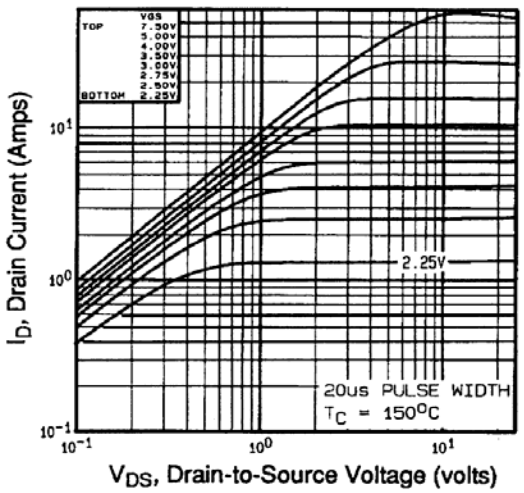

Fig 2. Typical Output Characteristics, T_C=150°C

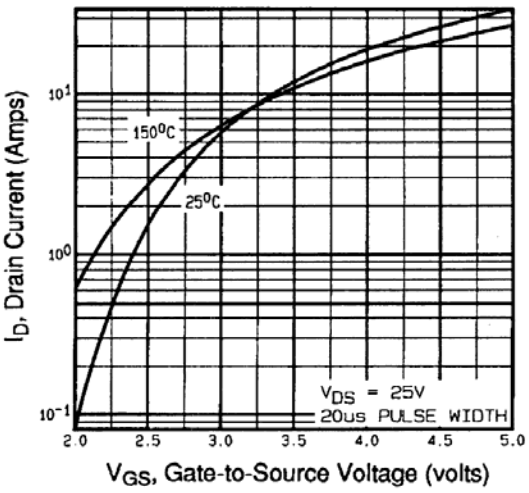

Fig 3. Typical Transfer Characteristics

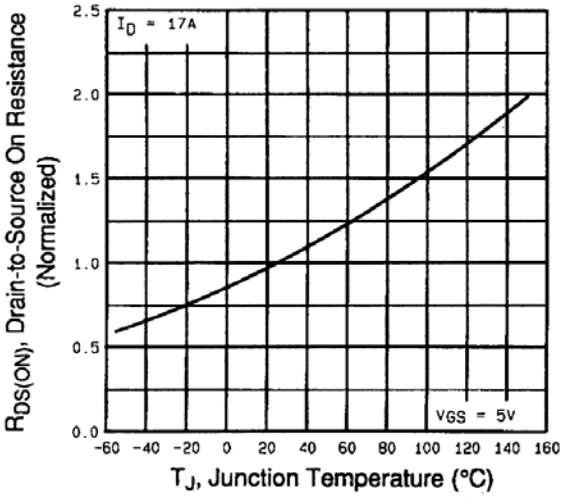

Fig 4. Normalized On-Resistance Vs. Temperature

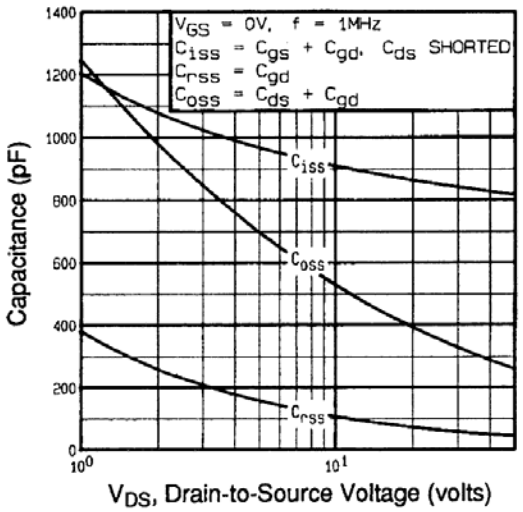

Fig 5. Typical Capacitance Vs. Drain-to-Source Voltage

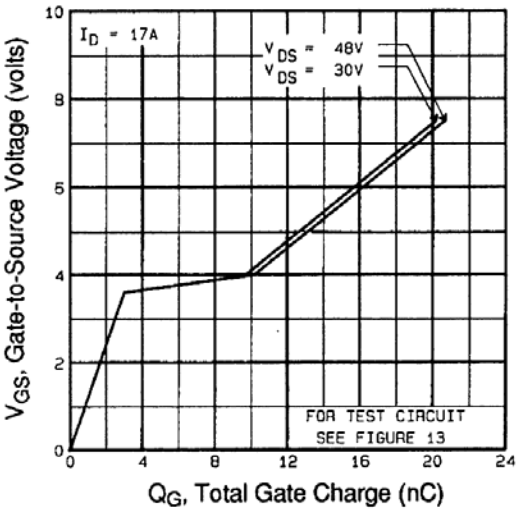

Fig 6. Typical Gate Charge Vs. Gate-to-Source Voltage

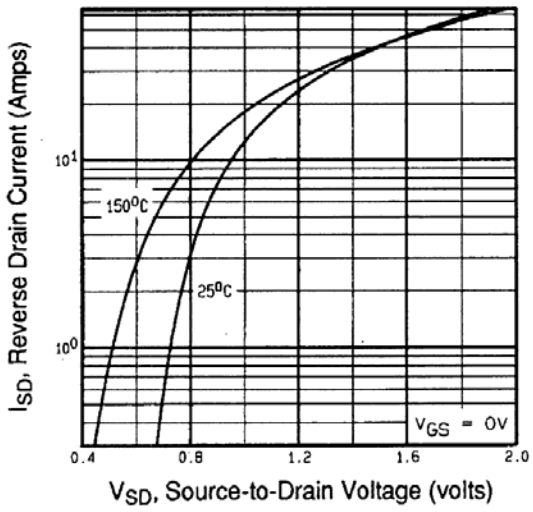

Fig 7. Typical Source-Drain Diode Forward Voltage

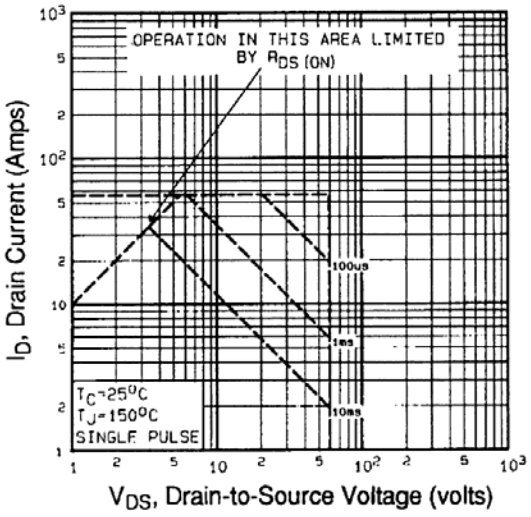

Fig 8. Maximum Safe Operating Area

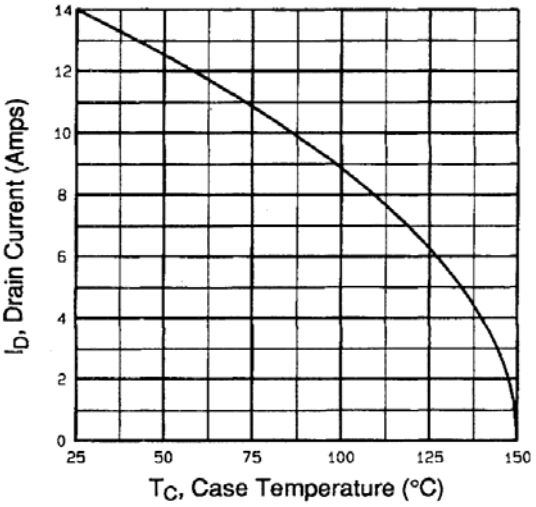

Fig 9. Maximum Drain Current Vs. Case Temperature

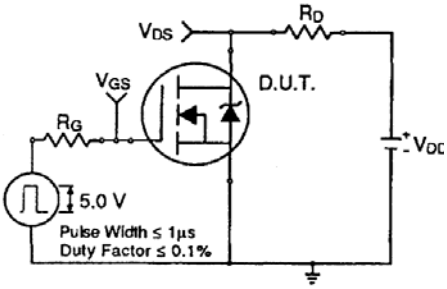

Fig 10a. Switching Time Test Circuit

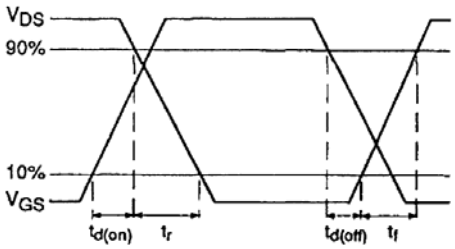

Fig 10b. Switching Time Waveforms

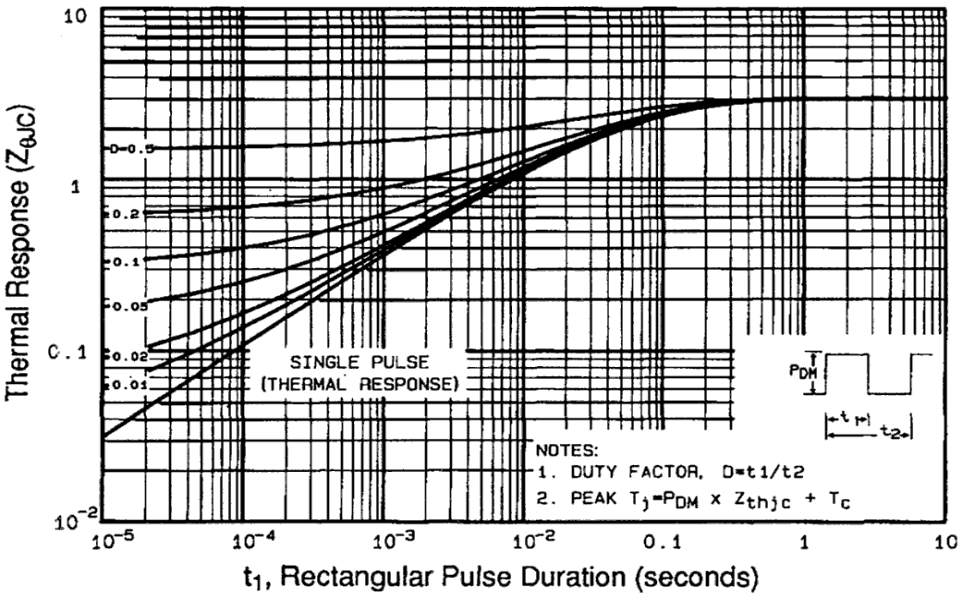

Fig 11. Maximum Effective Transient Thermal Impedance, Junction-to-Case

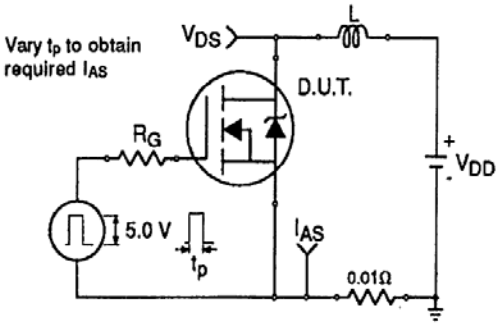

Fig 12a. Unclamped Inductive Test Circuit

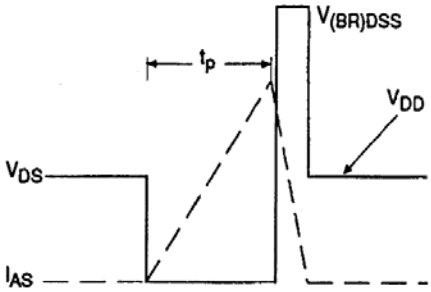

Fig 12b. Unclamped Inductive Waveforms

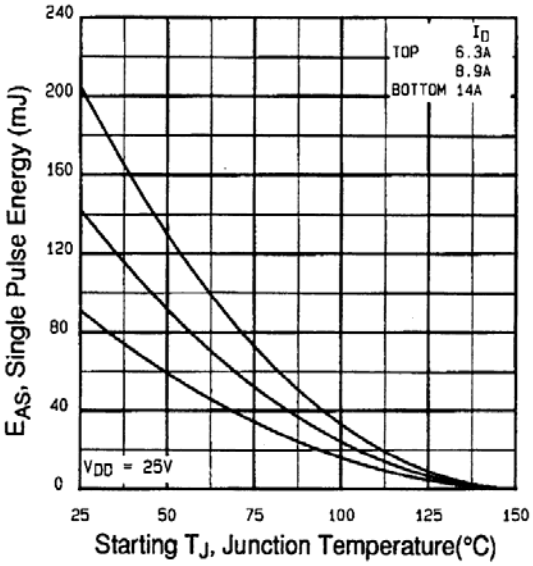

Fig 12c. Maximum Avalanche Energy Vs. Drain Current

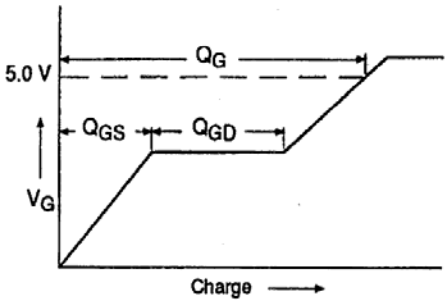

Fig 13a. Basic Gate Charge Waveform

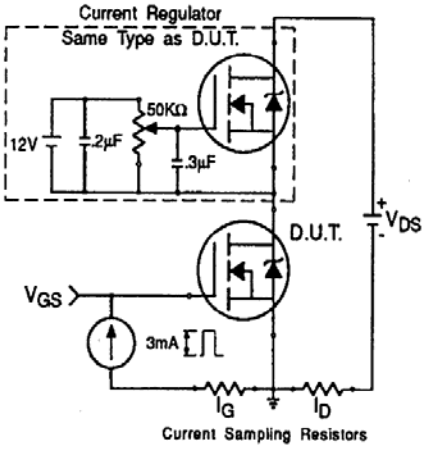

Fig 13b. Gate Charge Test Circuit

Peak Diode Recovery dv/dt Test Circuit

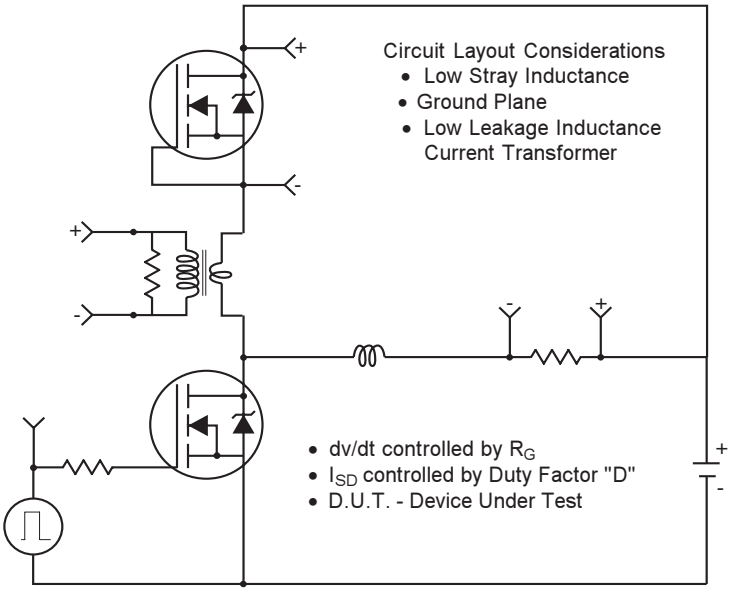

* Reverse Polarity for P-Channel
** Use P-Channel Driver for P-Channel Measurements

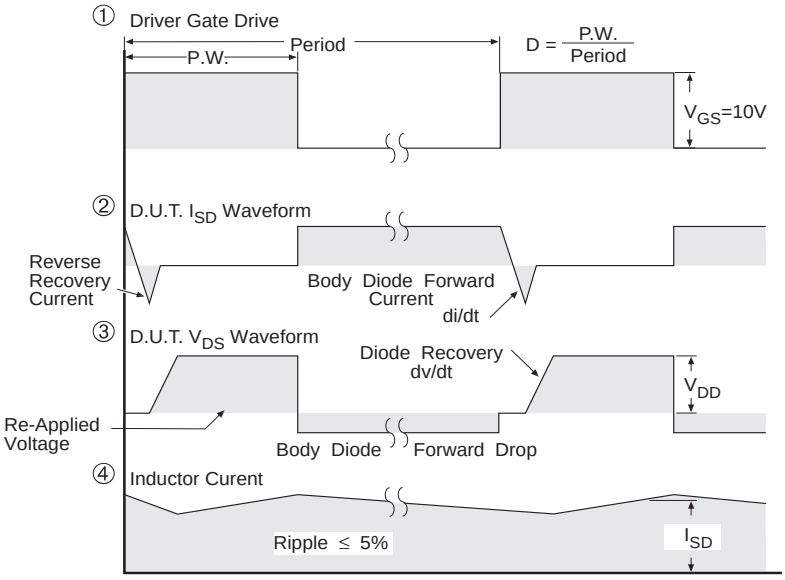

*** V_{GS} = 5.0V for Logic Level and 3V Drive Devices

Fig 14 For N Channel HEXFETS

D-Pak (TO-252AA) Package Outline

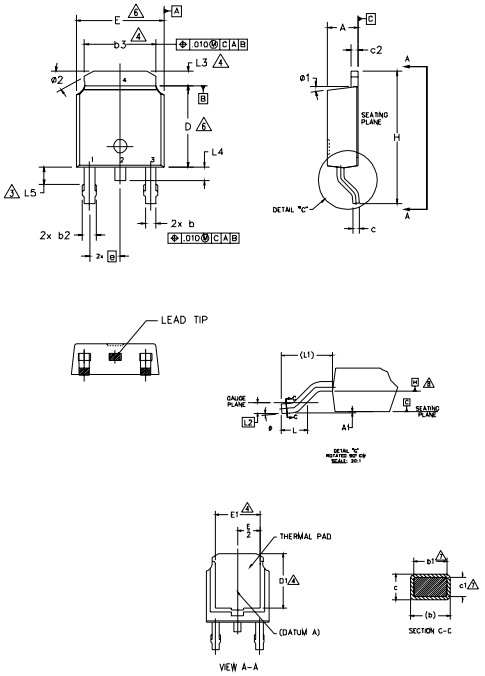

NOTES:

1.– DIMENSIONING AND TOLERANCING PER ASME Y14.5M–1994

2.– DIMENSION ARE SHOWN IN INCHES [MILLIMETERS].

3.– LEAD DIMENSION UNCONTROLLED IN L5.

4.– DIMENSION D1, E1, L3 & b3 ESTABLISH A MINIMUM MOUNTING SURFACE FOR THERMAL PAD.

5.– SECTION C–C DIMENSIONS APPLY TO THE FLAT SECTION OF THE LEAD BETWEEN .005 AND 0.10 [0.13 AND 0.25] FROM THE LEAD TIP.

6.– DIMENSION D & E DO NOT INCLUDE MOLD FLASH. MOLD FLASH SHALL NOT EXCEED .005 [0.13] PER SIDE. THESE DIMENSIONS ARE MEASURED AT THE OUTMOST EXTREMES OF THE PLASTIC BODY.

7.– DIMENSION b1 & c1 APPLIED TO BASE METAL ONLY.

8.– DATUM A & B TO BE DETERMINED AT DATUM PLANE H.

9.– OUTLINE CONFORMS TO JEDEC OUTLINE TO–252AA.

SYMBOL	DIMENSIONS				NOTES
	MILLIMETERS		INCHES		
	MIN.	MAX.	MIN.	MAX.	
A	2.18	2.39	.086	.094	
A1	–	0.13	–	.005	
b	0.64	0.89	.025	.035	
b1	0.65	0.79	.025	.031	7
b2	0.76	1.14	.030	.045	
b3	4.95	5.46	.195	.215	4
c	0.46	0.61	.018	.024	
c1	0.41	0.56	.016	.022	7
c2	0.46	0.89	.018	.035	
D	5.97	6.22	.235	.245	6
D1	5.21	–	.205	–	4
E	6.35	6.73	.250	.265	6
E1	4.32	–	.170	–	4
e	2.29 BSC		.090 BSC		
H	9.40	10.41	.370	.410	
L	1.40	1.78	.055	.070	
L1	2.74 BSC		.108 REF.		
L2	0.51 BSC		.020 BSC		
L3	0.89	1.27	.035	.050	4
L4	–	1.02	–	.040	
L5	1.14	1.52	.045	.060	3
ø	0°	10°	0°	10°	
ø1	0°	15°	0°	15°	
ø2	25°	35°	25°	35°	

LEAD ASSIGNMENTS

HEXFET

1.– GATE
2.– DRAIN
3.– SOURCE
4.– DRAIN

IGBT & CoPAK

1.– GATE
2.– COLLECTOR
3.– EMITTER
4.– COLLECTOR

D-Pak (TO-252AA) Part Marking Information

EXAMPLE: THIS IS AN IRFR120
WITH ASSEMBLY
LOT CODE 1234
ASSEMBLED ON WW 16, 2001
IN THE ASSEMBLY LINE "A"

Note: "P" in assembly line position indicates "Lead-Free"

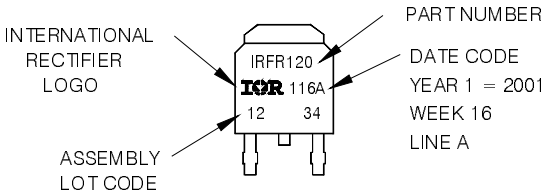

OR

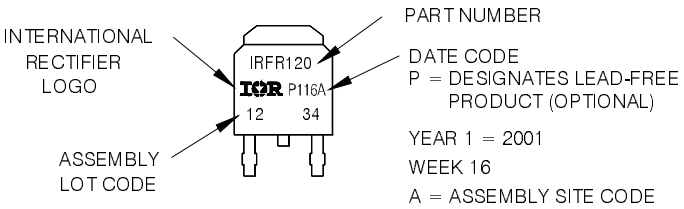

I-Pak (TO-251AA) Package Outline

Dimensions are shown in millimeters (inches)

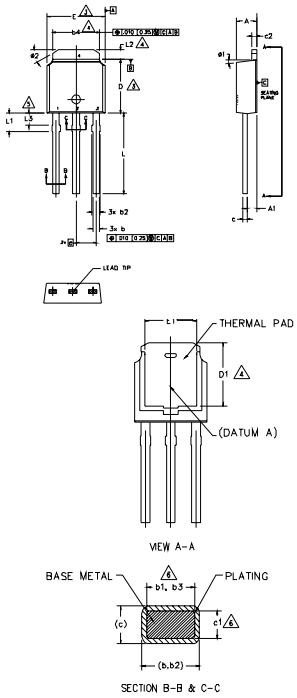

NOTES:

1.– DIMENSIONING AND TOLERANCING PER ASME Y14.5M–1994

2.– DIMENSION ARE SHOWN IN INCHES [MILLIMETERS].

3. DIMENSION D & E DO NOT INCLUDE MOLD FLASH. MOLD FLASH SHALL NOT EXCEED .005 [0.13] PER SIDE. THESE DIMENSIONS ARE MEASURED AT THE OUTMOST EXTREMES OF THE PLASTIC BODY.

4.– THERMAL PAD CONTOUR OPTION WITHIN DIMENSION b4, L2, E1 & D1.

5.– LEAD DIMENSION UNCONTROLLED IN L3.

6.– DIMENSION b1, b3 & c1 APPLY TO BASE METAL ONLY.

7.– OUTLINE CONFORMS TO JEDEC OUTLINE TO-251AA (Date 06/02).

8.– CONTROLLING DIMENSION : INCHES.

SYMBOL	DIMENSIONS				NOTES
	MILLIMETERS		INCHES		
	MIN.	MAX.	MIN.	MAX.	
A	2.18	2.39	.086	.094	
A1	0.89	1.14	.035	.045	
b	0.64	0.89	.025	.035	
b1	0.65	0.79	.025	.031	6
b2	0.76	1.14	.030	.045	
b3	0.76	1.04	.030	.041	6
b4	4.95	5.46	.195	.215	4
c	0.46	0.61	.018	.024	
c1	0.41	0.56	.016	.022	6
c2	0.46	0.89	.018	.035	
D	5.97	6.22	.235	.245	3
D1	5.21	–	.205	–	4
E	6.35	6.73	.250	.265	3
E1	4.32	–	.170	–	4
e	2.29 BSC		.090 BSC		
L	8.89	9.65	.350	.380	
L1	1.91	2.29	.075	.090	
L2	0.89	1.27	.035	.050	4
L3	1.14	1.52	.045	.060	5
ø1	0°	15°	0°	15°	
ø2	25°	35°	25°	35°	

LEAD ASSIGNMENTS

HEXFET

1.– GATE
2.– DRAIN
3.– SOURCE
4.– DRAIN

I-Pak (TO-251AA) Part Marking Information

EXAMPLE: THIS IS AN IRFU120
WITH ASSEMBLY
LOT CODE 5678
ASSEMBLED ON WW 19, 2001
IN THE ASSEMBLY LINE "A"

Note: "P" in assembly line position indicates Lead-Free"

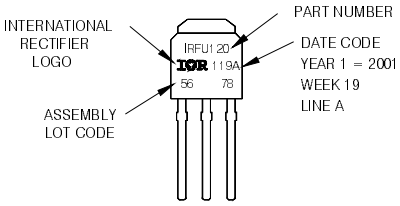

OR

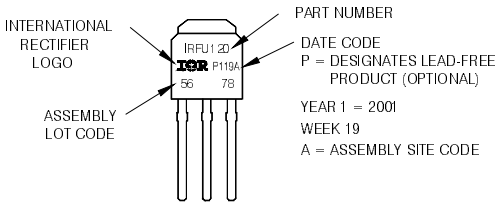

D-Pak (TO-252AA) Tape & Reel Information

Dimensions are shown in millimeters (inches)

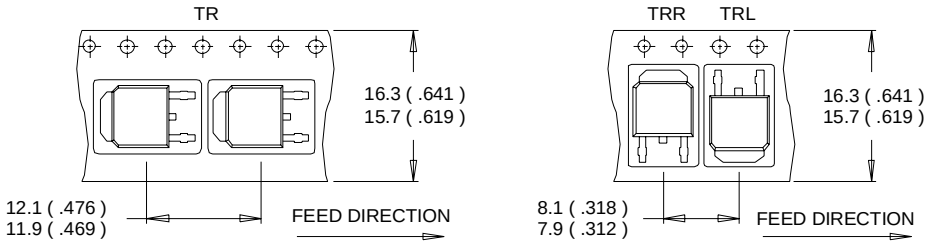

NOTES :
1. CONTROLLING DIMENSION : MILLIMETER.
2. ALL DIMENSIONS ARE SHOWN IN MILLIMETERS (INCHES).
3. OUTLINE CONFORMS TO EIA-481 & EIA-541.

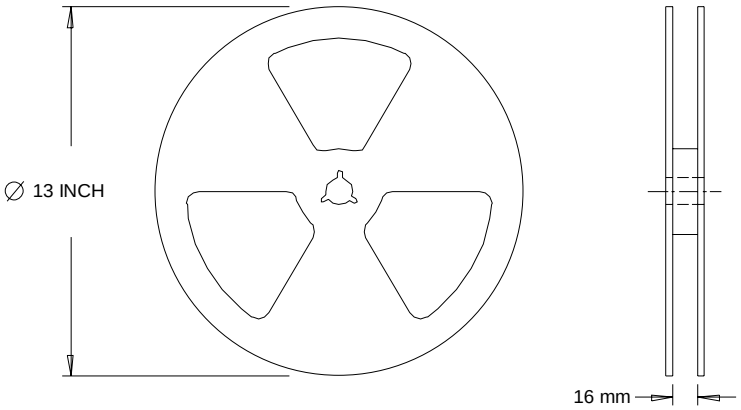

NOTES :
1. OUTLINE CONFORMS TO EIA-481.

Data and specifications subject to change without notice.

International
IOR Rectifier

IR WORLD HEADQUARTERS: 233 Kansas St., El Segundo, California 90245, USA Tel: (310) 252-7105
TAC Fax: (310) 252-7903
Visit us at www.irf.com for sales contact information. 08/2006