查询I100N50X4供应商
捷多邦，专业PCB打样工厂，24小时加急出货

Anaren

ROHS Compliant

Model I100N50X4

Flange Mount Termination
100 Watts, 50Ω

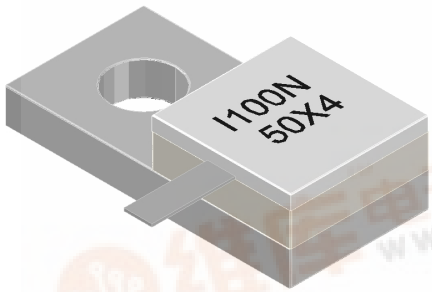

Description

The I100N50X4 is high performance Aluminum Nitride (AlN) flange mount termination intended as a cost competitive alternative to Beryllium Oxide (BeO). The termination is well suited to all cellular frequency bands such as; AMPS, GSM, DCS, PCS, PHS and UMTS. The high power handling makes the part ideal for terminating circulators, and for use in power combiners. The termination is also RoHS compliant!

General Specifications

Resistive Element	Thick Film
Substrate	AlN Ceramic
Cover	Alumina Ceramic

Tolerance is ±0.010", unless otherwise specified. Designed to meet of exceed applicable portions of MIL-E-5400. All dimensions in inches.

Features:

- **RoHS Compliant**
- **100 Watts**
- **DC – 3.0 GHz**
- **AlN Ceramic**
- **Non-Nichrome Resistive Element**
- **Low VSWR**
- **100% Tested**

Electrical Specifications

Resistance Value:	50 Ohms, ± 2%
Power:	100 Watts
Frequency Range:	DC – 3.0GHz
V.S.W.R.	1.25 : 1

Specification based on unit properly installed using suggested mounting instructions and a 50 ohm nominal impedance. Storage temperature is -20°C to 85 ºC . Operating temperature is -55ºC to 125ºC (see chart for derating temperatures). **Specifications subject to change with out notice.**

Outline Drawing

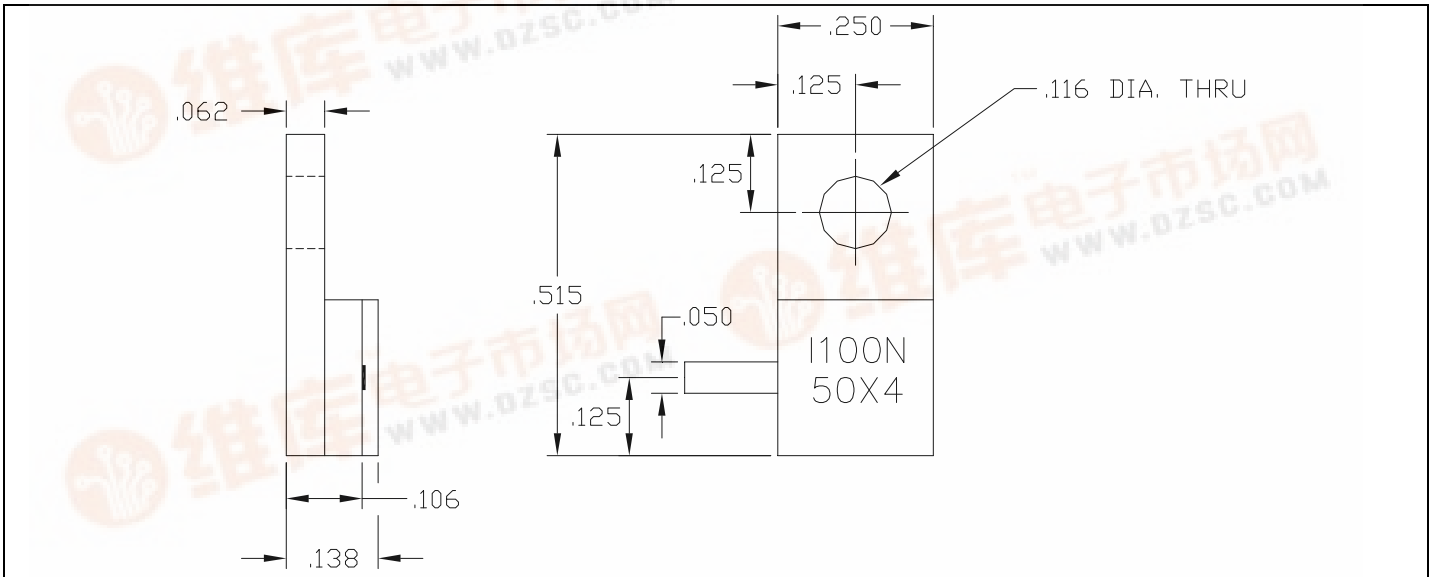

Note: All dimensions in inches – 1inch = 2.54cm. Lead Length: 0.150in min.

找PDF 维库一下 pdf.dzsc.com

Anaren
What'll we think of next?™

USA/Canada: (315) 432-8909
Toll Free: (800) 544-2414

Model I100N50X4

ROHS Compliant

Anaren

Typical Performance:

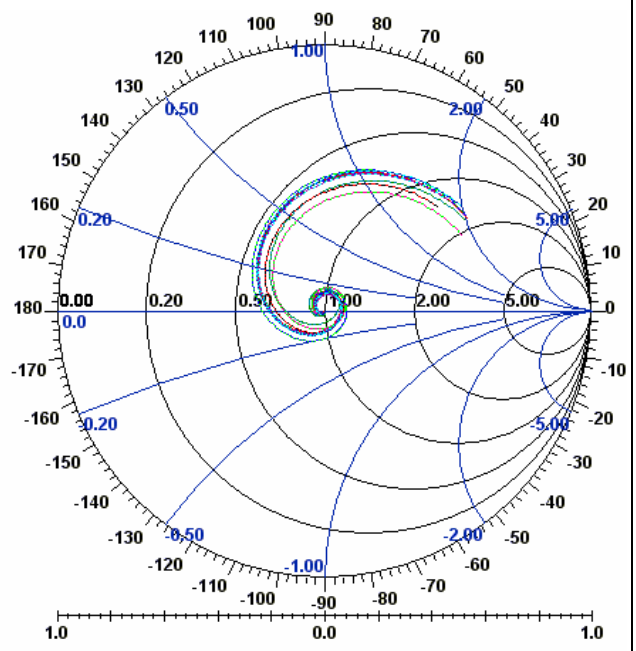

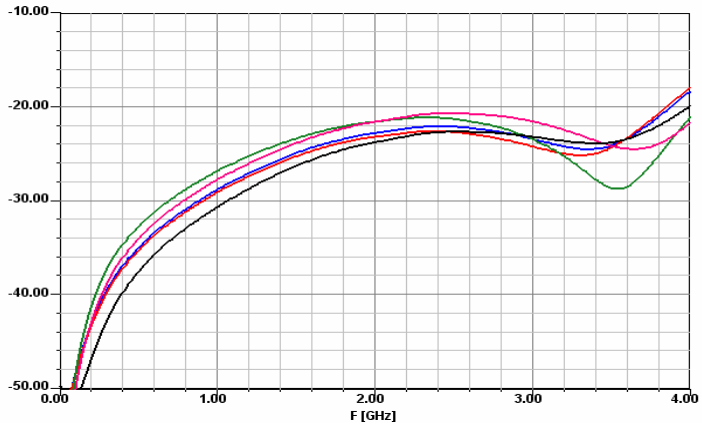

Power De-rating:

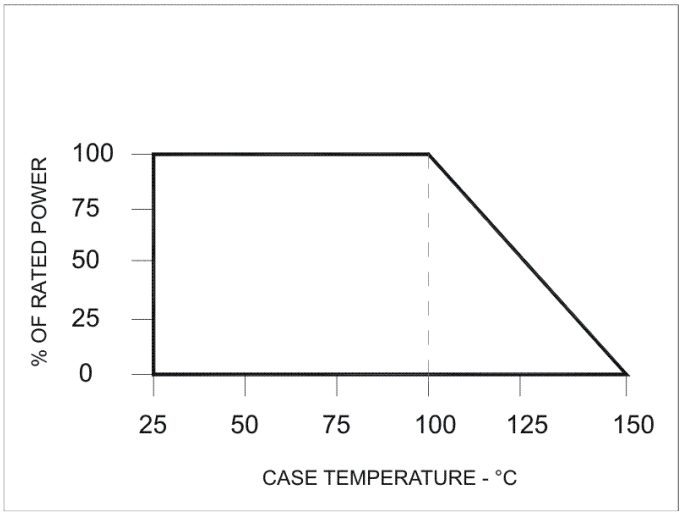

Mounting Footprint and Procedure:

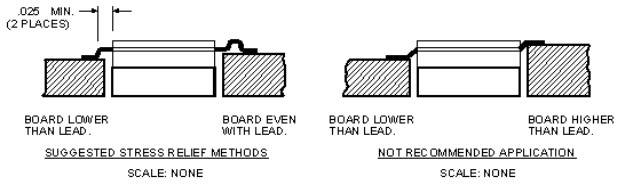

SUGGESTED MOUNTING PROCEDURES:

1. MAKE SURE THAT THE DEVICES ARE MOUNTED ON FLAT SURFACES (.001" UNDER THE DEVICE) TO OPTIMIZE THE HEAT TRANSFER.
2. DRILL & TAP THE HEATSINK FOR THE APPROPRIATE THREAD SIZE TO BE USED.
3. COAT HEATSINK WITH A MINIMUM AMOUNT OF HIGH QUALITY SILICONE GREASE (.001" MAX. THICKNESS).
4. POSITION DEVICE ON MOUNTING SURFACE & SECURE USING SOCKET HEAD SCREWS, FLAT & SPLIT WASHER. TORQUE SCREWS TO THE APPROPRIATE VALUE. MAKE SURE THAT THE DEVICE IS FLAT AGAINST THE HEATSINK. (CARE SHOULD BE TAKEN TO AVOID UPWARD PRESSURE OF THE LEADS TOWARDS THE LID).
5. SOLDER LEADS IN PLACE USING LEAD FREE TYPE SOLDER WITH A CONTROLLED TEMPERATURE IRON

** FOR MORE DETAILS CONTACT FACTORY **

USA/Canada: (315) 432-8909
Toll Free: (800) 544-2414

Anaren