查询KELD001供应商 捷多邦，专业PCB打样工厂，24小时加急出货

NEW PRODUCT

KODENSHI

Infrared Emitting Diode(GaAs) KELD001

Description

The KELD001, high-power GaAs IRED mounted in a 2nd Mold package, is compact, and easy to mount.

Features

- Compact
- Side-looking with plastic package
- RoHS Compliance
- Small 2nd Mold Package

Outline Dimensions

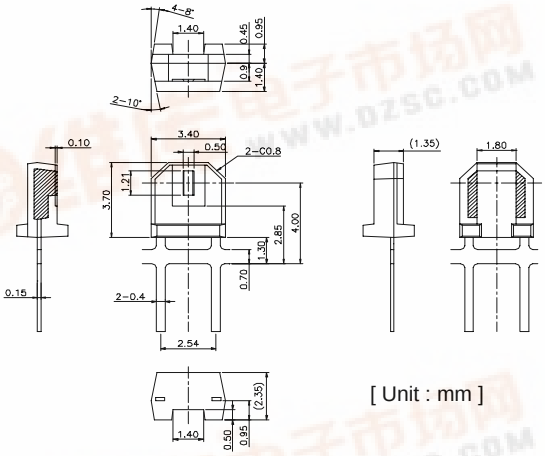

[Unit : mm]

Application

- Encoders
- Mouses
- OA machines
- Photointerrupter

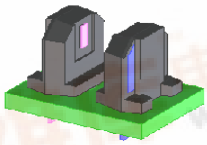

Characteristics

[Ta= 25℃]

Description	Symbol	Condition	Min.	Typ.	Max.	Unit
Forward Current	I_F		-	50	-	mA
Reverse Voltage	V_R		-	5	-	V
Power Dissipation	P_D		-	75	-	mW
Radiant intensity	P_O	I_F=20mA	-	0.2	-	mW/sr
Forward Voltage	V_F	I_F=20mA	-	1.2	2.0	V
Peak Wavelength	λp	I_F=20mA	-	940	-	nm
Half Angle	△⊖		-	±15	-	deg.

找PDF 维库一下 pdf.dzsc.com