查询TGA2513供应商

捷多邦，专业PCB打样工厂，24小时加急出货

TriQuint SEMICONDUCTOR®

Advance Product Information

July 9, 2007

Wideband LNA

TGA2513

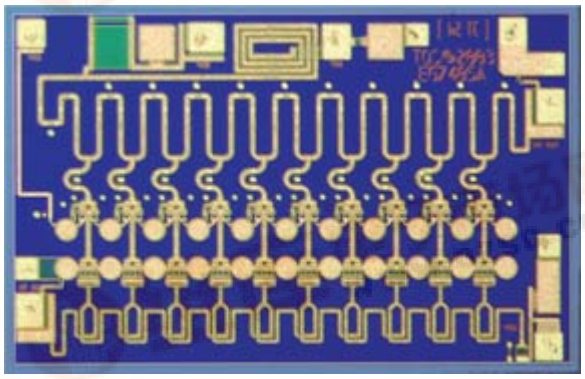

Key Features

- Frequency Range: 2-23 GHz
- 17 dB Nominal Gain
- 16 dBm Nominal P1dB
- < 2 dB Midband Noise Figure
- 0.15 um 3MI pHEMT Technology
- Nominal Bias: Vd = 5V, Id = 75 mA
- Chip Dimensions: 2.09 x 1.35 x 0.10 mm (0.082 x 0.053 x 0.004 in)

Primary Applications

- Wideband Gain Block / LNA
- X-Ku Point to Point Radio
- IF & LO Buffer Applications

Product Description

The TriQuint TGA2513 is a compact LNA/Gain Block MMIC. The LNA operates from 2-23 GHz and is designed using TriQuint's proven standard 0.15 um gate pHEMT production process.

The TGA2513 provides a nominal 16 dBm of output power at 1 dB gain compression with a small signal gain of 17 dB. Typical noise figure is < 3 dB from 2-18 GHz.

The TGA2513 is suitable for a variety of wideband electronic warfare systems such as radar warning receivers, electronic counter measures, decoys, jammers and phased array systems.

The TGA2513 is 100% DC and RF tested on-wafer to ensure performance compliance.

Lead-Free & RoHS compliant.
Evaluation Boards are available upon request.

Measured Fixtured Data

Vd = 5V, Id= 75mA, Vg2 = 2V, Typical Vg1 = -60mV

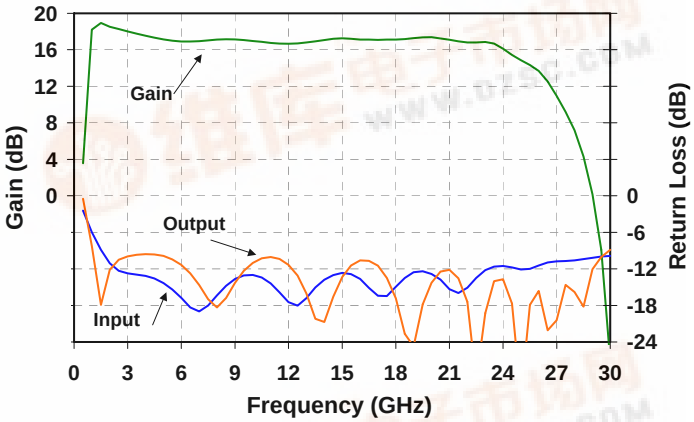

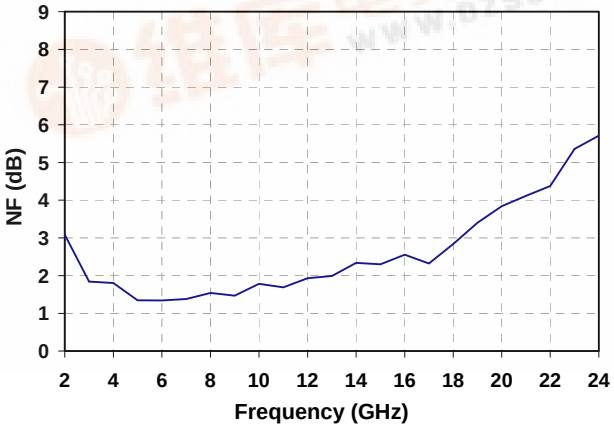

Note: This device is early in the characterization process prior to finalizing all electrical specifications. Specifications are subject to change without notice.

找PDF 下载 pdf.dzsc.com

TABLE I
MAXIMUM RATINGS 1/

SYMBOL	PARAMETER	VALUE	NOTES
Vd	Positive Supply Voltage	5 V	2/
V_{g1}	Gate 1 Supply Voltage Range	-1V TO 0 V	
V_{g2}	Gate 2 Supply Voltage Range	(Vd – 3) TO (Vd – 2) V	
Id	Positive Supply Current	151 mA	2/
$\| I_G \|$	Gate Supply Current	10 mA	
P_{IN}	Input Continuous Wave Power	21 dBm	2/
P_D	Power Dissipation	1.5 W	2/, 3/
T_{CH}	Operating Channel Temperature	117 °C	4/
T_M	Mounting Temperature (30 Seconds)	320 °C	
T_{STG}	Storage Temperature	-65 to 117 °C	

1/ These ratings represent the maximum operable values for this device.

2/ Combinations of supply voltage, supply current, input power, and output power shall not exceed P_D.

3/ When operated at this power dissipation with a base plate temperature of 70 °C, the median life is 1 E+6 hours.

4/ Junction operating temperature will directly affect the device median time to failure (T_M). For maximum life, it is recommended that junction temperatures be maintained at the lowest possible levels.

TABLE II
DC PROBE TEST
(T_A = 25 °C, Nominal)

SYMBOL	PARAMETER	MINIMUM	MAXIMUM	UNIT
$I_{dss, Q1- Q10}$	Saturated Drain Current	--	216	mA
$V_{p, Q1-Q10}$	Pinch-off Voltage	-1	0	V
$V_{BVGD, Q1-Q10}$	Breakdown Voltage Gate-Drain	-30	-7	V
$V_{BVGS, Q1-Q10}$	Breakdown Voltage Gate-Source	-30	-5	V

Note: Q1-Q10 is a 720um size FET.

TABLE III
RF CHARACTERIZATION TABLE
(T_A = 25 °C, Nominal)
Vd = 5V, Id = 75 mA Vg2 = 2V

SYMBOL	PARAMETER	TEST CONDITION	NOMINAL	UNITS
Gain	Small Signal Gain	f = 2-23 GHz	17	dB
IRL	Input Return Loss	f = 2-23 GHz	14	dB
ORL	Output Return Loss	f = 2-23 GHz	14	dB
NF	Noise Figure	f = 3-13 GHz f = 2-18 GHz	2 < 3	dB
P_{1dB}	Output Power @ 1dB Gain Compression	f = 2-23 GHz	16	dBm

TABLE IV
THERMAL INFORMATION*

Parameter	Test Conditions	T_{CH} (°C)	$R_{\theta JC}$ (°C/W)	T_M (HRS)
$R_{\theta JC}$ Thermal Resistance (channel to backside of carrier)	Vd = 5 V I_D = 75 mA Pdiss = 0.375 W	82	32	4.5 E+7

Note: Assumes eutectic attach using 1.5 mil 80/20 AuSn mounted to a 20 mil CuMo Carrier at 70°C baseplate temperature. Worst case condition with no RF applied, 100% of DC power is dissipated.

Measured Fixtured Data

Vd = 5V, Id= 75mA, Typical Vg1 = -60mV, Vg2 = 2V

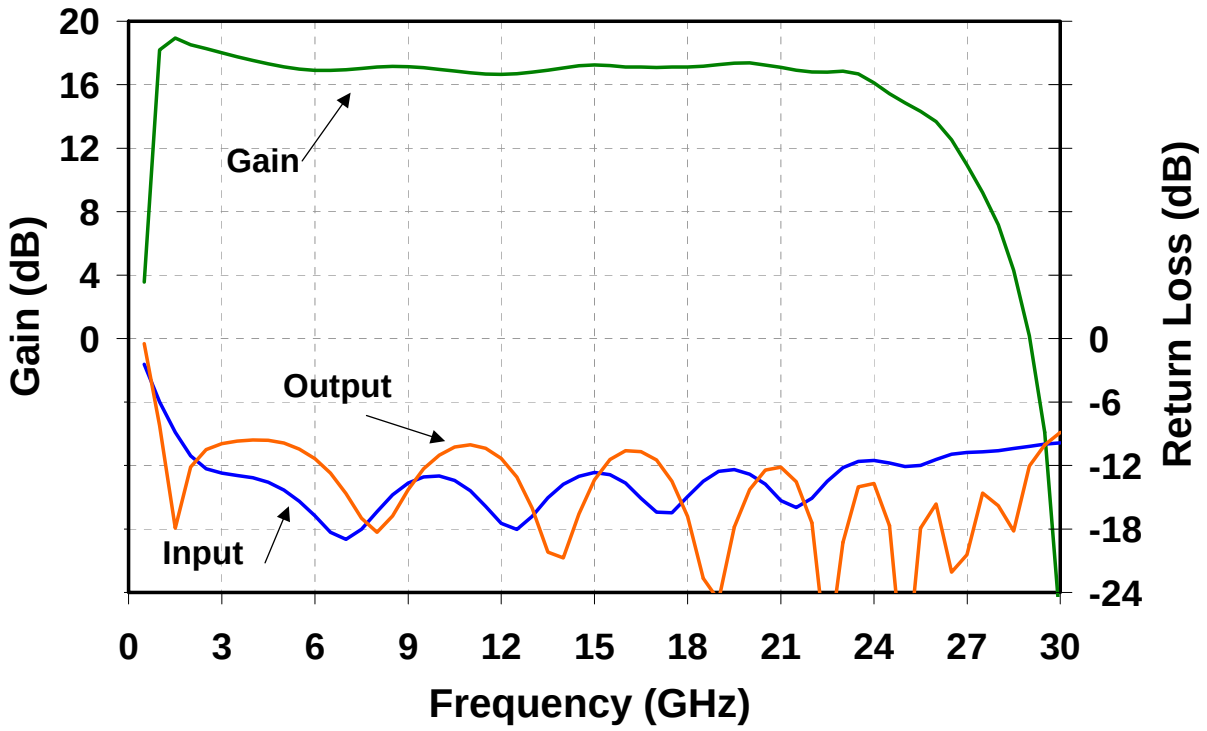

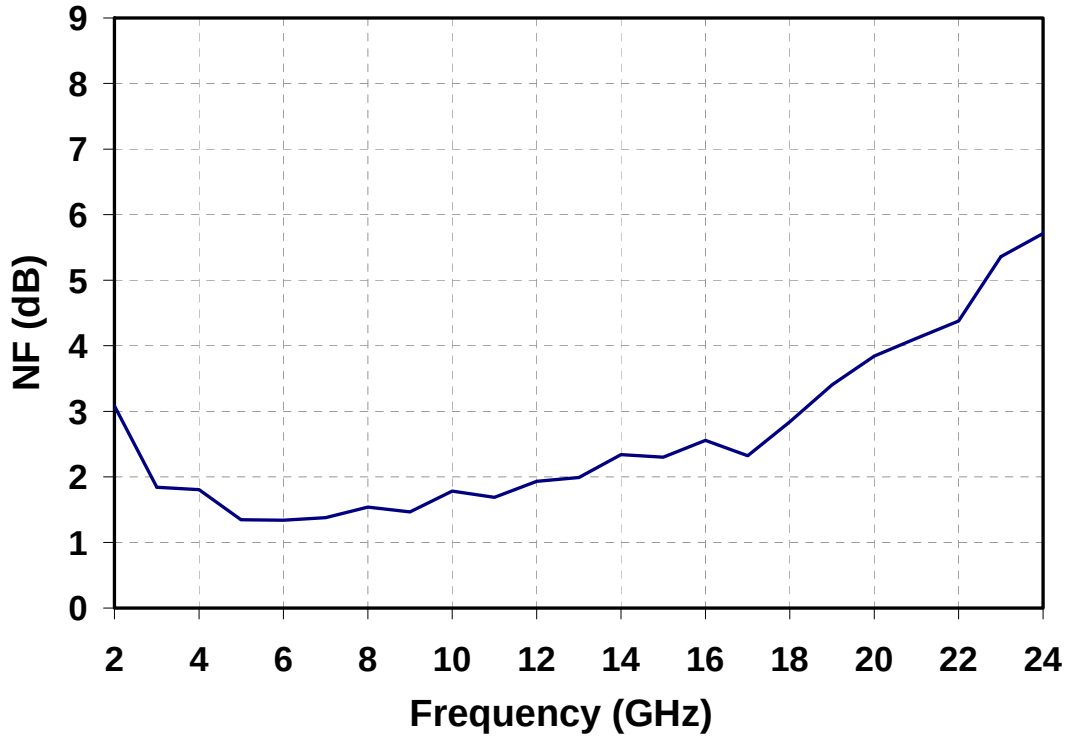

Measured Fixtured Data

Vd = 5V, Id= 75mA, Typical Vg1 = -60mV,Vg2 = 2V

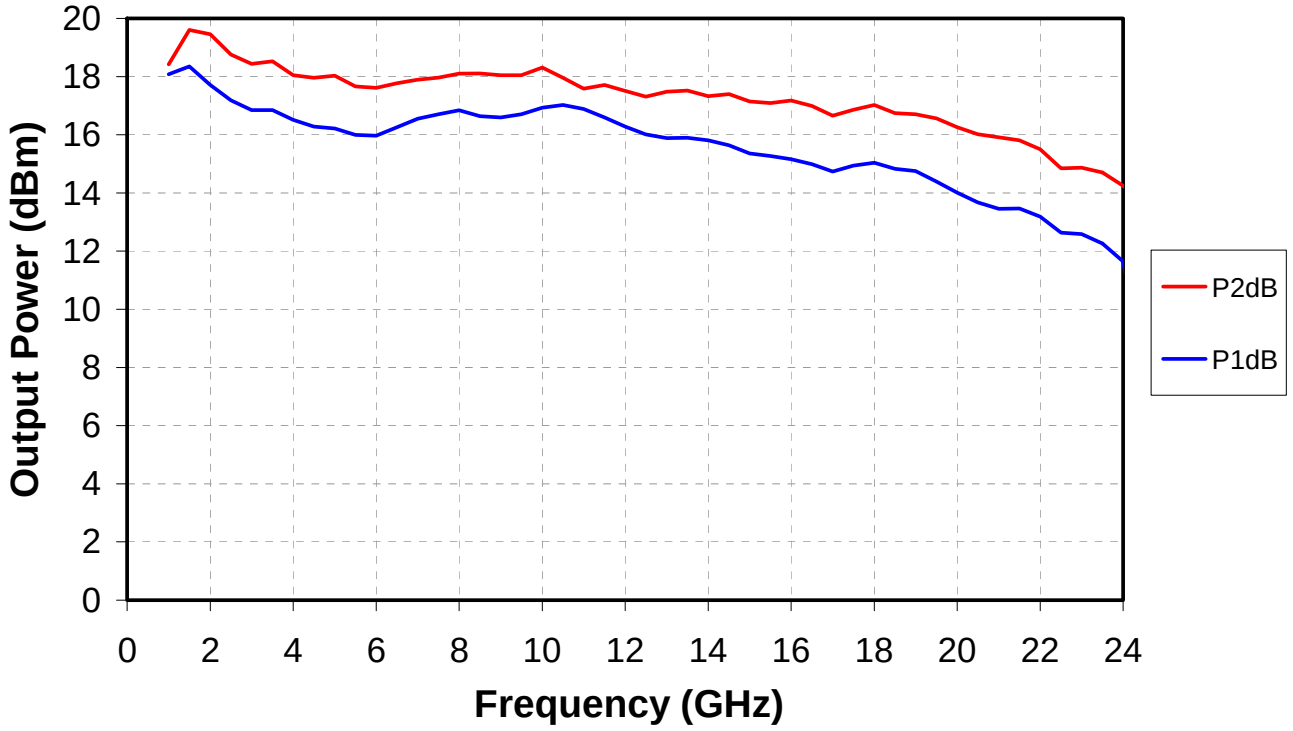

Measured Fixtured Data

Vd = 5V, Id= 75mA, Typical Vg1 = -60mV, Vg2 = 2V

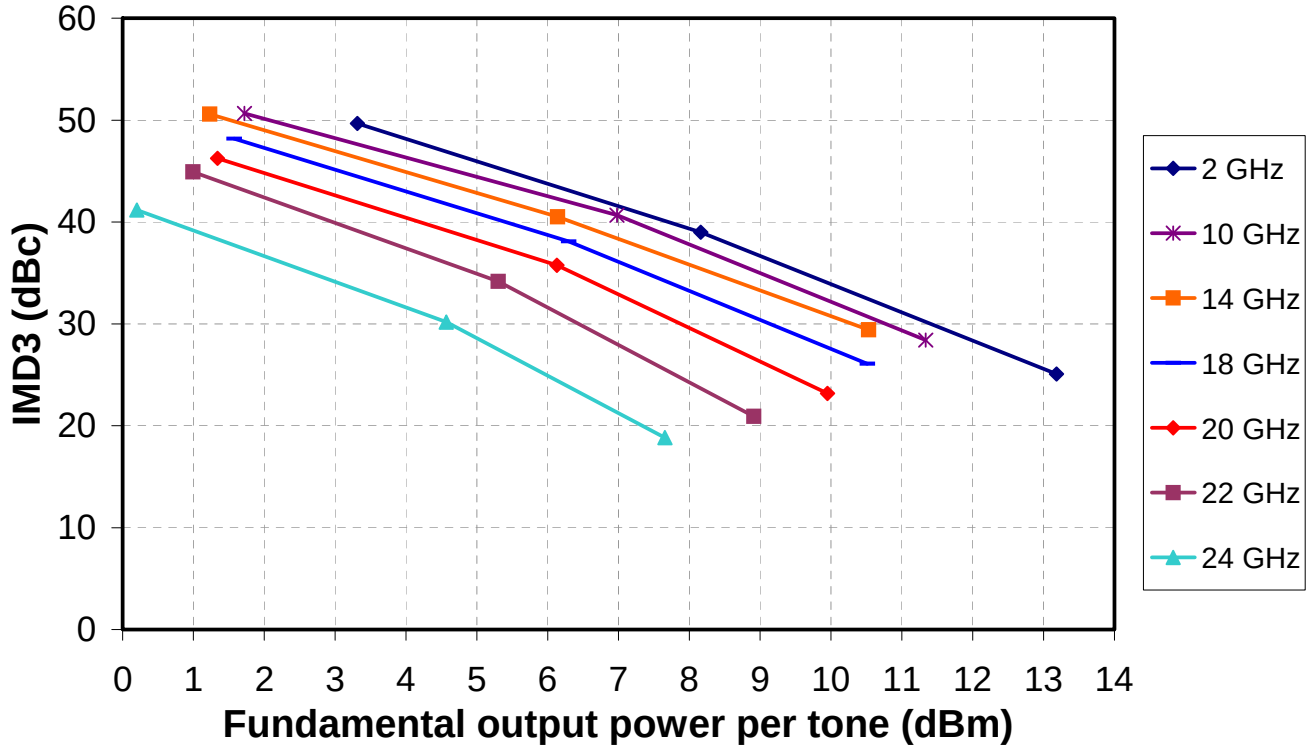

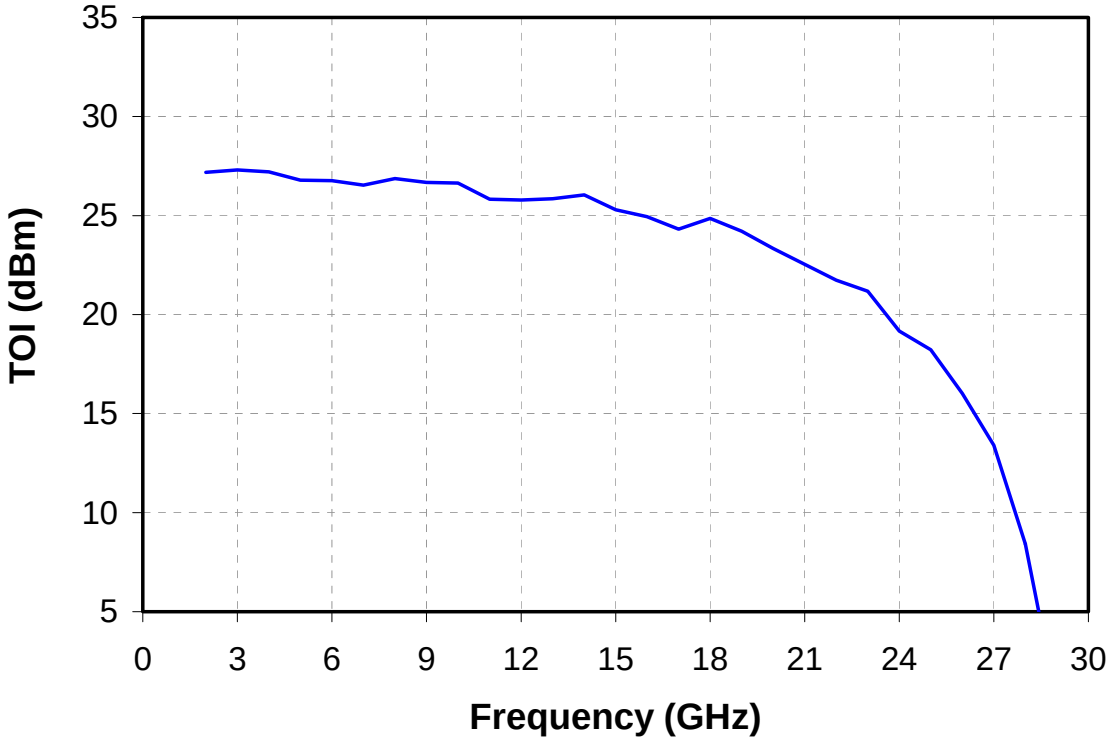

Mechanical Characteristics

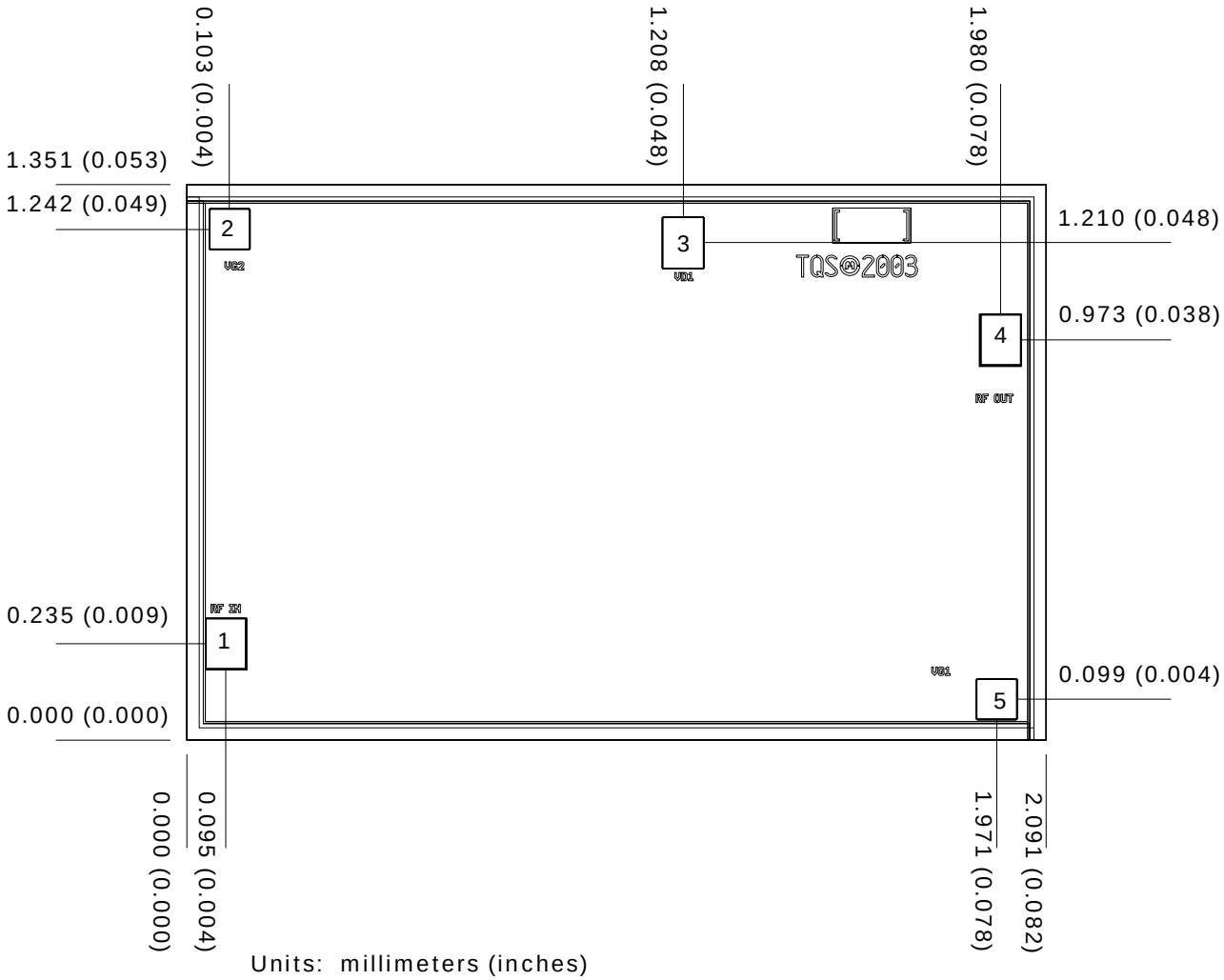

Units: millimeters (inches)
Thickness: 0.100 (0.004) (reference only)
Chip edge to bond pad dimensions are shown to center of pad
Chip size tolerance: +/- 0.051 (0.002)

GND IS BACKSIDE OF MMIC

Bond Pad #1:	RF IN	0.100 x 0.125 (0.004 x 0.005)
Bond Pad #2:	VG2	0.100 x 0.100 (0.004 x 0.004)
Bond Pad #3:	VD	0.100 x 0.125 (0.004 x 0.005)
Bond Pad #4:	RF OUT	0.100 x 0.125 (0.004 x 0.005)
Bond Pad #5:	VG1	0.100 x 0.100 (0.004 x 0.004)

GaAs MMIC devices are susceptible to damage from Electrostatic Discharge. Proper precautions should be observed during handling, assembly and test.

Recommended Assembly Diagram

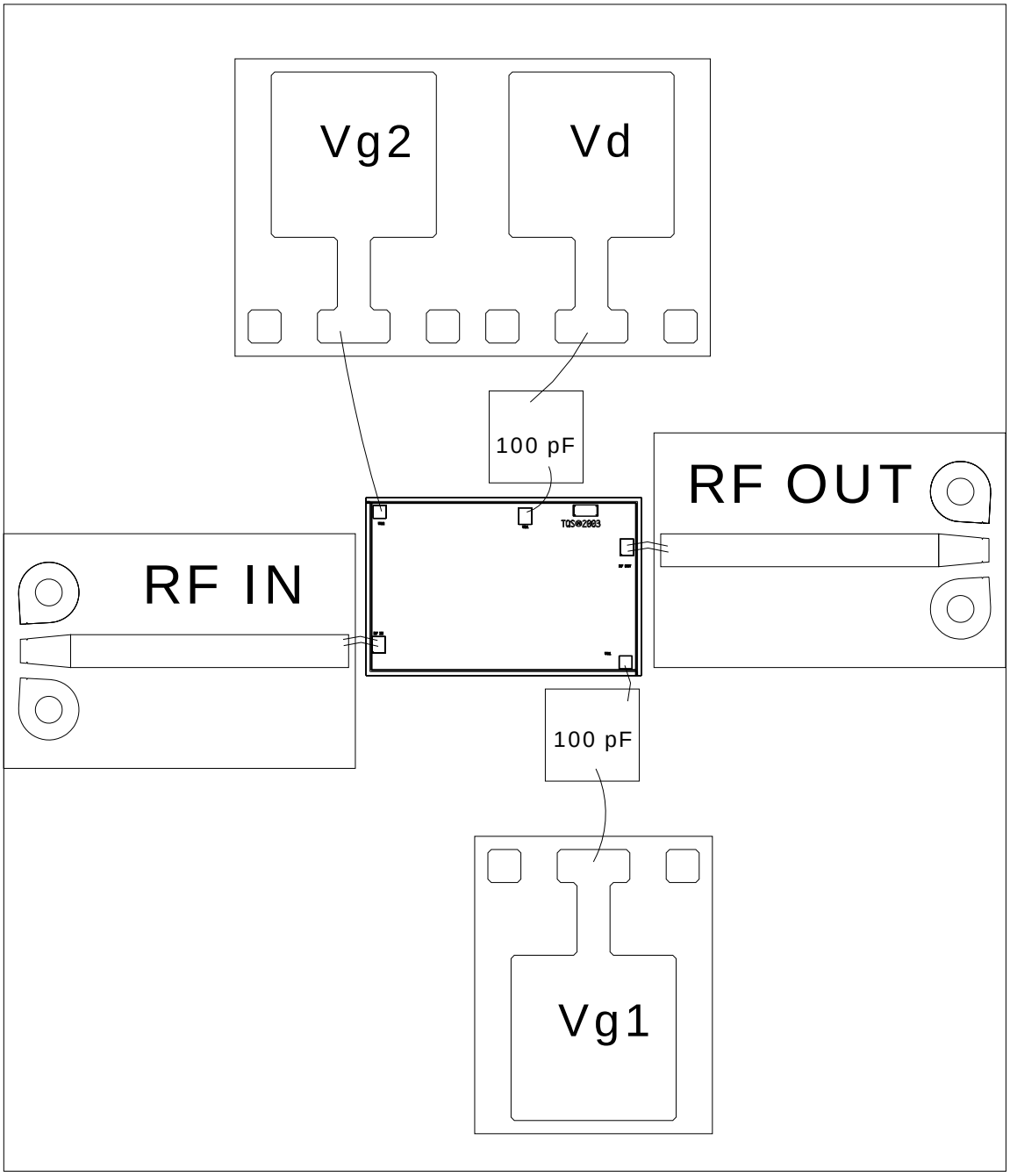

GaAs MMIC devices are susceptible to damage from Electrostatic Discharge. Proper precautions should be observed during handling, assembly and test.

Assembly Process Notes

Reflow process assembly notes:

- Use AuSn (80/20) solder with limited exposure to temperatures at or above 300 °C for 30 sec
- An alloy station or conveyor furnace with reducing atmosphere should be used.
- No fluxes should be utilized.
- Coefficient of thermal expansion matching is critical for long-term reliability.
- Devices must be stored in a dry nitrogen atmosphere.

Component placement and adhesive attachment assembly notes:

- Vacuum pencils and/or vacuum collets are the preferred method of pick up.
- Air bridges must be avoided during placement.
- The force impact is critical during auto placement.
- Organic attachment can be used in low-power applications.
- Curing should be done in a convection oven; proper exhaust is a safety concern.
- Microwave or radiant curing should not be used because of differential heating.
- Coefficient of thermal expansion matching is critical.

Interconnect process assembly notes:

- Thermosonic ball bonding is the preferred interconnect technique.
- Force, time, and ultrasonics are critical parameters.
- Aluminum wire should not be used.
- Devices with small pad sizes should be bonded with 0.0007-inch wire.
- Maximum stage temperature is 200 °C.

GaAs MMIC devices are susceptible to damage from Electrostatic Discharge. Proper precautions should be observed during handling, assembly and test.