查询TK15326M供应商 捷多邦，专业PCB打样工厂，24小时加急出货

TOKO

TK15326

Audio Analog Switch

FEATURES

- Wide Operating Voltage Range (±2 to ±7 V)
- Low Distortion (typ. 0.003%)
- Wide Dynamic Range (typ. 6 V_{P-P})
- Low Output Impedance (typ. 20 Ω)
- Low Switching Noise (typ. 3 mV)

APPLICATIONS

- Audio Systems
- Radio Cassettes

DESCRIPTION

The TK15326M is an Analog Switch IC that was developed for audio frequency. Function is to select one output from two inputs in a device that includes two circuits, and the channel can be changed by high level. The TK15326M has a dual power supply and the input bias is direct coupling at GND level. Because the distortion is very low, the TK15326M fits various signals switching. It is best suited for Hi-Fi devices. Operating voltage is wide, the circuit plan is simple. The TK15326M is available in a small plastic surface mount package (SSOP-12).

TK15326

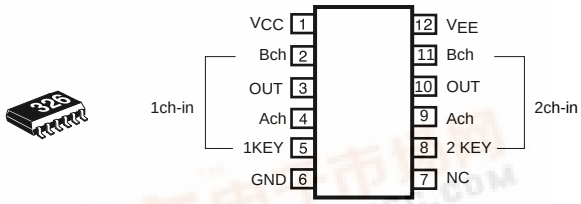

BLOCK DIAGRAM

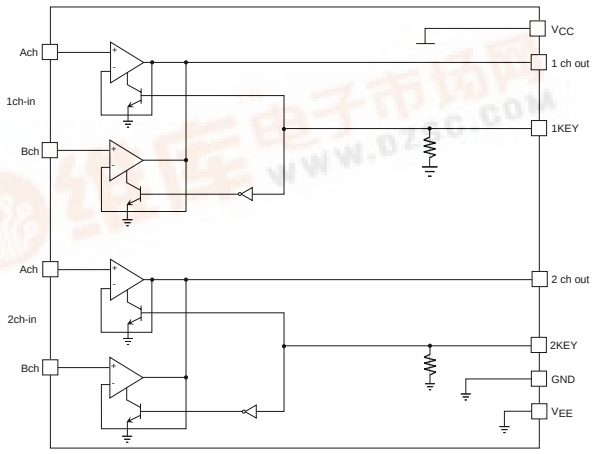

ORDERING INFORMATION

TK15326M □□

Tape/Reel Code

TAPE/REEL CODE
TL: Tape Left

找PDF 维库一下 pdf.dzsc.com

ABSOLUTE MAXIMUM RATINGS

Supply Voltage ..... ±7.5 V
Power Dissipation (Note 5) ..... 350 mW
Storage Temperature Range ..... -55 to +150 °C
Operating Temperature Range .....-20 to +75 °C
CONTROL SECTION
Input Voltage ..... -0.3 V to V_{CC} + 0.3 V

ANALOG SWITCH SECTION
Signal Input Voltage ..... V_{EE} - 0.3 to V_{CC} + 0.3
Signal Output Current ..... 3 mA

Operating Voltage Range..... ±2 to ±7 V
Maximum Input Frequency..... 100 kHz

TK15326M ELECTRICAL CHARACTERISTICS

Test conditions: V_{CC} = ±4 V, T_A = 25 °C, unless otherwise specified.

SYMBOL	PARAMETER	TEST CONDITIONS	MIN	TYP	MAX	UNITS
I_{CC}	Supply Current			3.2	5.2	mA
KEY CONTROL SECTION						
V_{IL}	Input Voltage Low Level	Note 1	-0.3		+0.8	V
V_{IH}	Input Voltage High Level		1.8		V_{CC} + 0.3	V
Z_{IN}	Input Impedance			50		kΩ
ANALOG SWITCH SECTION						
THD	Total Harmonic Distortion	V_{IN} = 1 Vrms, f = 1 kHz		0.003	0.006	%
N_L	Residual Noise	Note 2			10	µVrms
ISO	Isolation	V_{IN} = 1 Vrms, F = 10 kHz, Note 3			-75	dB
SEP	Separation	V_{IN} = 1 Vrms, f = 10 kHz, Note 3			-80	dB
DYN	Maximum Input Signal Level	f = 1 kHz, THD = 0.1%	2.0			Vrms
GVA	Voltage Gain	f = ~20 kHz		0		dB
V_{cent}	Input-Output Terminal Voltage	GND Bias	- 0.2	0	+0.2	V
ΔV_{cent}	Output Terminal Voltage Difference	Between same channel		3	13	mV
I_{IN}	Input Bias Current	Note 4		0.5		µA
Z_{OUT}	Output Impedance	DC Impedance		20		Ω

Note 1: The KEY input equivalent circuit is shown in Figure A.
1 channel and 2 channel is the separate action by 1Key pin and 2 key pin. When the control pin is open, it is outputted low level (about 1.4 V). Then the A channel input signal is outputted. The change is carried out at high level.
Note 2: The specification means a value as measurement-input terminal connects to ground through a capacitor.
Note 3: ISO is a cross talk between A channel and B channel, SEP is a cross talk between 1 channel and 2 channel. The specification means a value as measurement-input termianl connects to ground through 10 kΩ resistor and capacitor.
Note 4: Input equivalent circuit is shown in Figure B. The standard application of TK15326M is the direct connecting with the GND bias. When connecting a capacitor, then to supply a bias voltage from GND to input be any resistor is necessary.
Note 5: Power dissipation is 350 mW when mounted as recommended. Derate at 3.0 mW/°C for operation above 25°C.

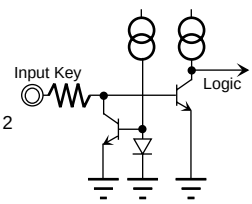

Figure A

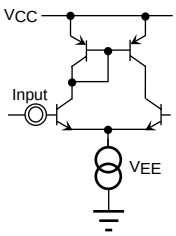

Figure B

TEST CIRCUITS AND METHODS

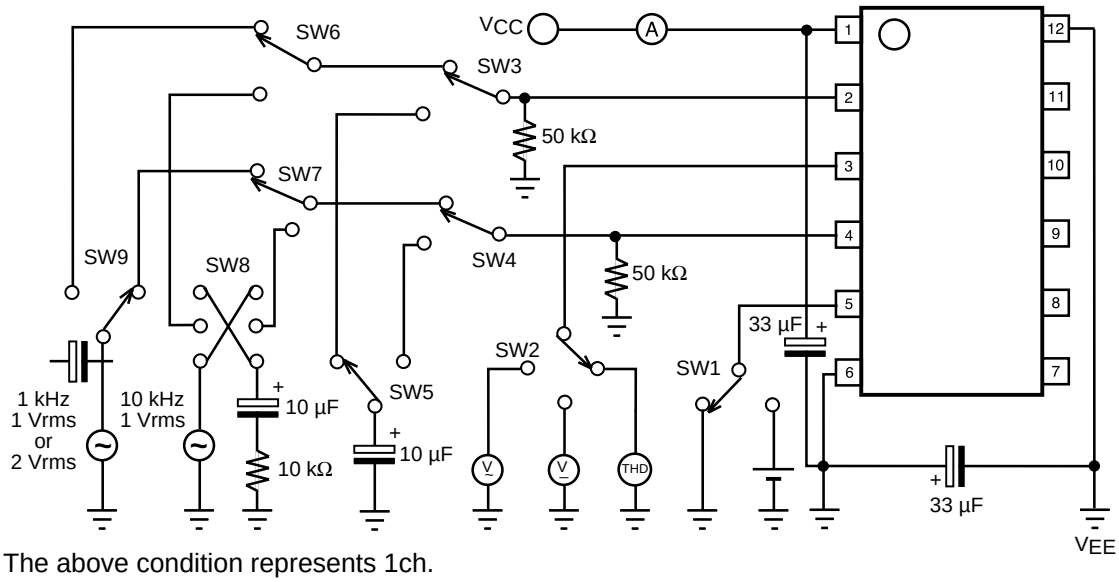

1: The above condition represents 1ch.
2: The above conditions distortion rate of 1-Ach and dynamic range measurement.
3: SW5 is for residual noise measurement.
4: SW8 is for cross talk (ISO or SEP) measurement.

SUPPLY CURRENT (FIGURE 1)

This current is a consumption current with a nonloading condition.

1) Bias supply to Pins 2,4,9,11. (This condition is the same with other measurements, omitted from the next for simplicity)
2) Measure the inflow current to Pin 1 from V_{CC}. This current is the supply current.

CONTROL LOW/HIGH LEVEL (FIGURE 2)

This level is to measure the threshold level.

1) Input, the V_{CC} to Pin 1 and input V_{EE} to Pin 12. (This condition is the same with other measurements, omitted from the next for simplicity)
2) Input to Pin 4 with sine wave (f = 1 kHz, V_{IN} = 1 Vrms).
3) Connect an oscilloscope to Pin 3.
4) Drop the control voltage gradually from V_{CC} until the sine wave appears at the oscilloscope. This voltage is the threshold level when the wave appears.

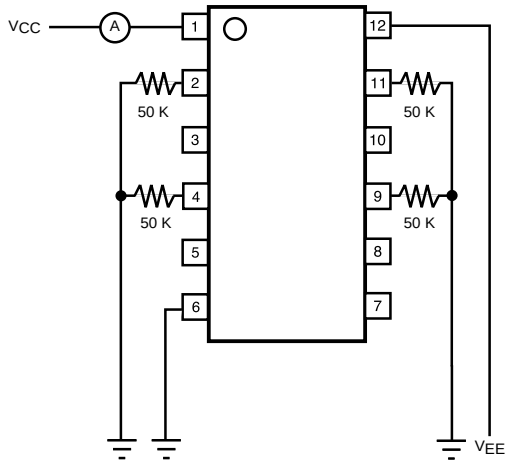

Figure 1

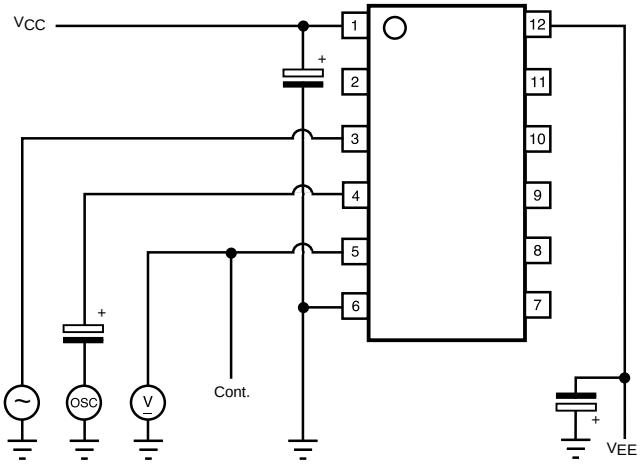

Figure 2

TEST CIRCUITS AND METHODS (CONT.)

CONTROL INPUT IMPEDANCE (FIGURE 3)

This is the input resistance of the control terminal.
1) Measure the inflow current from V_{CC} to Pin 5.
2) Calculate:
   IMP = V_{CC} / Inflow Current
   This resistance is the input impedance.

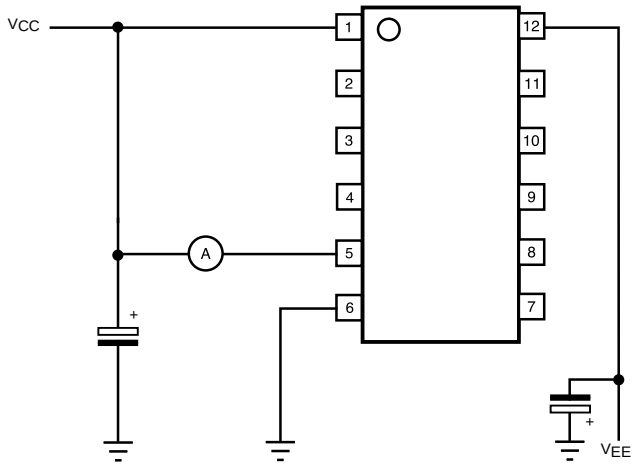

Figure 3

TOTAL HARMONIC DISTORTION (FIGURE 4)

Use the lower distortion oscillator for this measurement because distortion of the TK15326 is very low.
1) Pin 5 is in the open condition, or low level.
2) Connect a distortion analyzer to Pin 3.
3) Input the sine wave (1 kHz, 1 Vrms) to Pin 4.
4) Measure the distortion of Pin 3. This value is the distortion of 1-Ach.
5) Next connect Pin 5 to the V_{CC}, or high level.
6) Input the same sine wave to Pin 2.
7) Measure in the same way. This value is the distortion of 1-Bch.

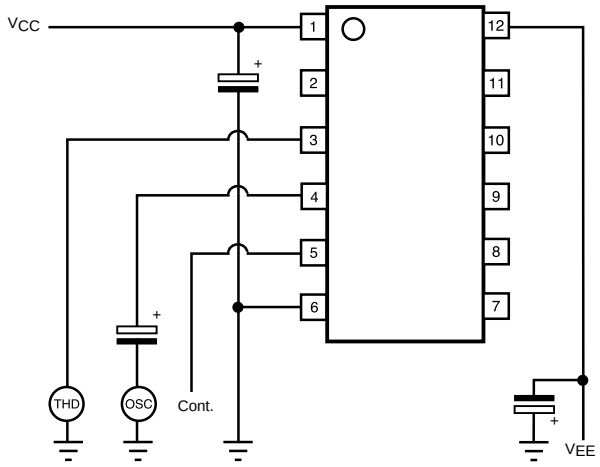

Figure 4

VOLTAGE GAIN (FIGURE 5)

This is the output level against input level.
1) Pin 5 is in the open condition, or low level.
2) Connect AC volt meters to Pin 4 and Pin 3.
   (Using the same type meter is best)
3) Input a sine wave (f = max. 20 kHz, 1 Vrms) to Pin 4.
4) Measure the level of Pin 4 and name this V1.
5) Measure the level of Pin 3 and name this V2.
6) Calculate Gain = 20 Log ((|V2 - V1|)/V1)
   V1<V2 + Gain, V1>V2 - Gain
   This value is the voltage gain of 1-Ach.
7) Next, connect Pin 5 to the V_{CC}, or high level.
8) Input the same sine wave to Pin 2.
9) Measure and calculate in the same way.
   This value is the maximum input level of 1-Bch.

TEST CIRCUITS AND METHODS (CONT.)

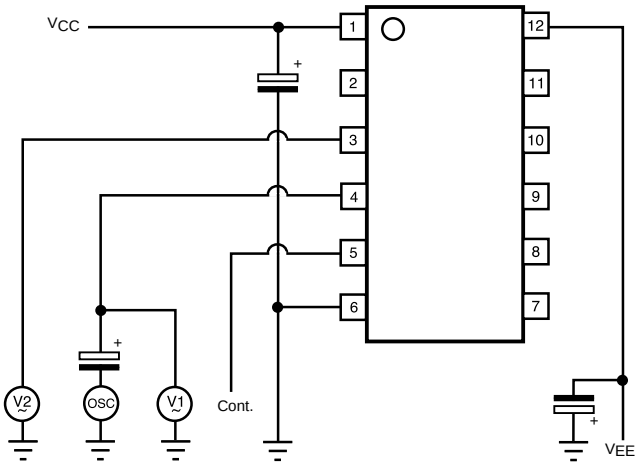

Figure 5

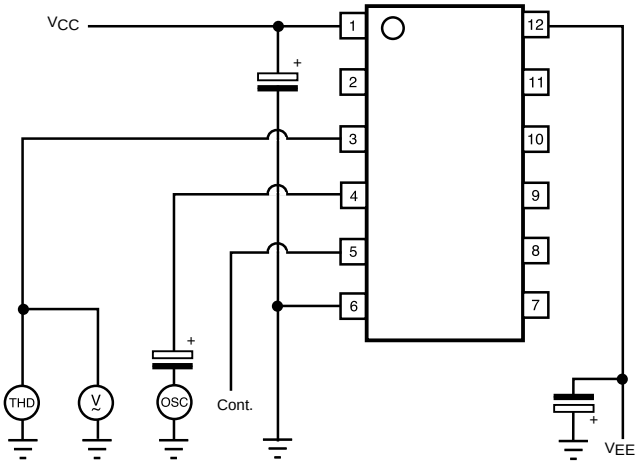

Figure 6

MAXIMUM INPUT LEVEL (FIGURE 6)

This measurement measures at output side.

1) Pin 5 is in the open condition, or low level.
2) Connect a distortion analyzer and an AC volt meter to Pin 3.
3) Input a sine wave (1 kHz) to Pin 4 and elevate the voltage gradually until the distortion gets to 0.1%.
4) When the distortion amounts to 0.1%, stop elevating and measure the AC level of Pin 3.
   This value is the maximum input level of 1-Ach.
5) Next, connect Pin 5 to the V_{CC}, or high level.
6) Input the same sine wave to Pin 2.
7) Measure in the same way.
   This value is the maximum input level of 1-Bch.

RESIDUAL NOISE (FIGURE 7)

This value is not S/N ratio. This is a noise which occurs from the device itself.

1) Pin 5 is the open condition, or low level.
2) Connect an AC volt meter to Pin 3.
3) Connect a capacitor from Pin 4 to GND.
4) Measure AC voltage of Pin 3. This value is the noise of 1-Ach. If the influence of noise from outside exists, use optional filters.
5) Next, connect Pin 5 to the V_{CC}, or high level.
6) Connect to GND through a capacitor from Pin 2.
7) Measure in the same way.
   This value is the noise level of 1-Bch.

TEST CIRCUITS AND METHODS (CONT.)

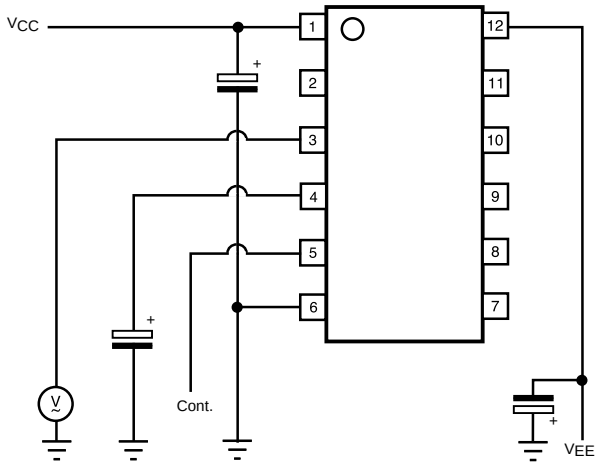

Figure 7

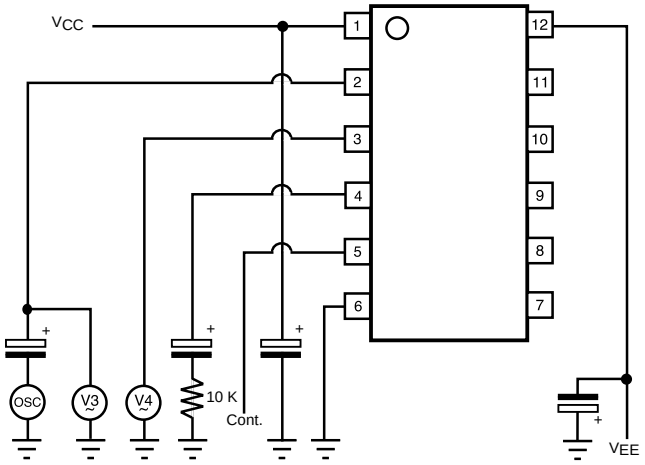

Figure 8

ISOLATION (FIGURE 8)

This is the cross talk between Ach and Bch.

1) Pin 5 is in the open condition, or low level.
2) Connect AC volt meters to Pin 2 and Pin 3.
3) Connect a capacitor and a resistance to GND from Pin 4.
4) Input a sine wave (10 kHz, 1 Vrms) to Pin 2.
5) Measure the level of Pin 2 and name this V3.
6) Measure the level of Pin 3 and name this V4.
7) Calculate:

   ISO = 20 Log (V4 / V3)

   This value is the isolation to Ach from Bch.
8) Next, connect Pin 5 to the V_{CC}, or high level.
9) Change line of Pin 2 and Pin 4.
10) Input the same sine wave to Pin 4.
11) Measure and calculate in the same way.

    This value is the isolation to Bch from Ach.

SEPARATION (FIGURE 9)

This is the cross talk between 1ch and 2ch.

1) Control level is free for Pin 5 and Pin 8.
2) Connect AC volt meters to Pin 4 (or Pin 2) and Pin 10.
3) Connect Pin 9 and Pin 11 to GND through capacitors and a resistance from Pin 9 and Pin 11 to GND.
4) Input a sine wave (10 kHz, 1 Vrms) to Pin 2 and Pin 4.
5) Measure the level of Pin 4 and name this V5.
6) Measure the level of Pin 10 and name this V6.
7) Calculate:

   SEP = 20 Log (V6 / V5)

   This value is the separation to 2ch from 1ch.

TEST CIRCUITS AND METHODS (CONT.)

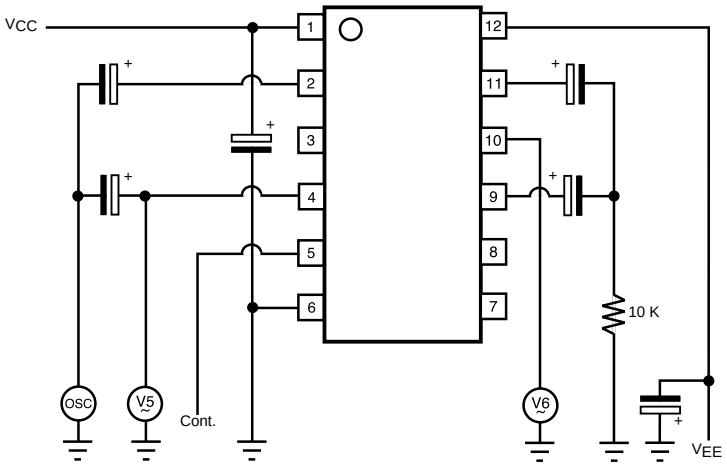

Figure 9

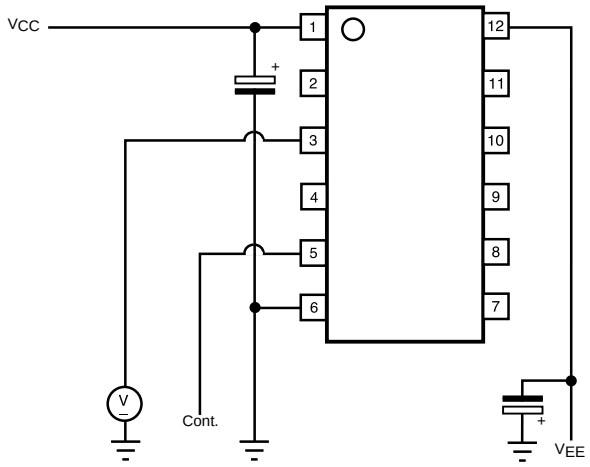

Figure 10

I/O TERMINAL VOLTAGE (FIGURE 10)

This is the DC voltage of input and output.
Because the input and the output are nearly equal, only the output is measured.

1) Pin 5 is in the open condition, or low level.
2) Connect a DC volt meter to Pin 3 and measure.
   This value is the terminal voltage of 1-Ach.
3) Next, connect Pin 5 to the V_{CC}, or high level.
4) Measure in the same way.
   This value is the terminal voltage of 1-Bch.

OUTPUT TERMINAL DIFFERENCE

This is the DC output voltage difference between Ach and Bch. This is calculated by using values measured at the I/O Terminal Voltage.

$$\Delta \text{ Vcent} = | (1 - \text{Ach value}) - (1 - \text{Bch value}) |$$

This value is the voltage difference of 1ch.

TYPICAL PERFORMANCE CHARACTERISTICS

V_{CC} = 8 V, T_A = 25 °C, unless otherwise specified.

SUPPLY CURRENT vs. SUPPLY VOLTAGE

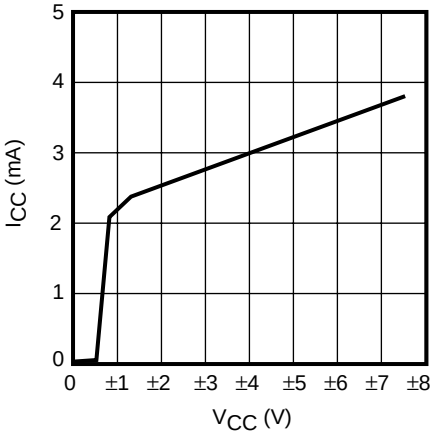

TOTAL HARMONIC DISTORTION vs. FREQUENCY

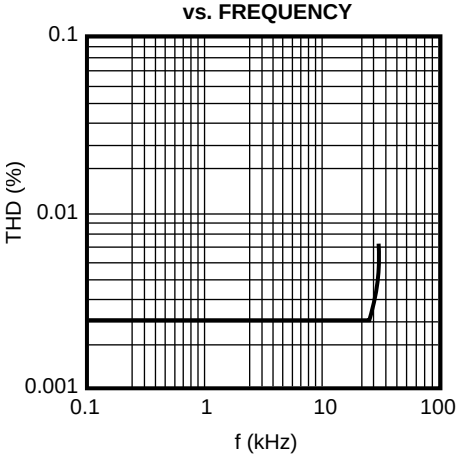

TOTAL HARMONIC DISTORTION vs. LOAD RESISTANCE

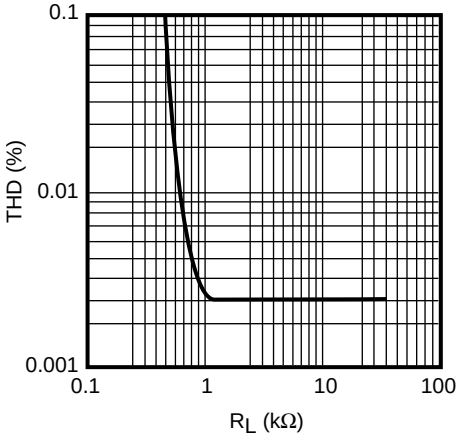

DYNAMIC RANGE vs. SUPPLY VOLTAGE

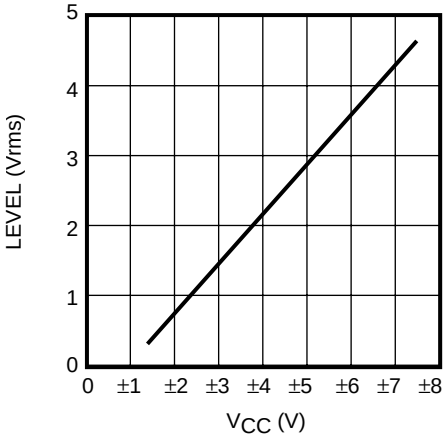

DYNAMIC RANGE vs. LOAD RESISTANCE

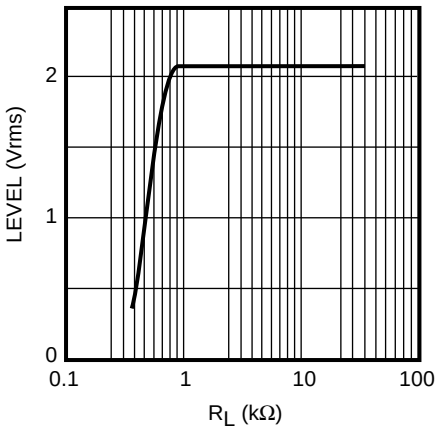

ISOLATION vs. FREQUENCY

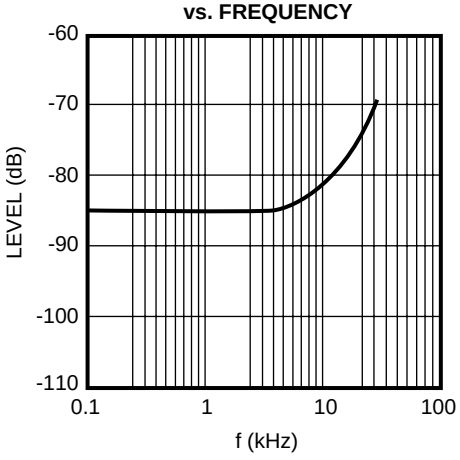

SEPARATION vs. FREQUENCY

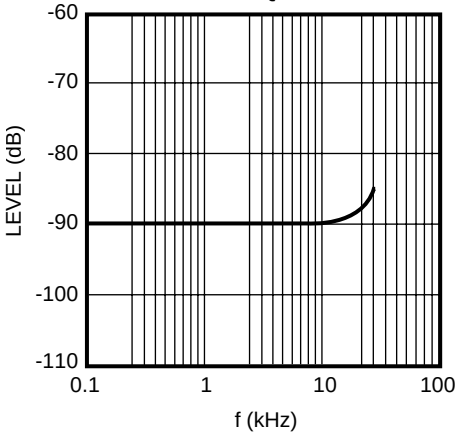

CONTROL THRESHOLD vs. TEMPERATURE

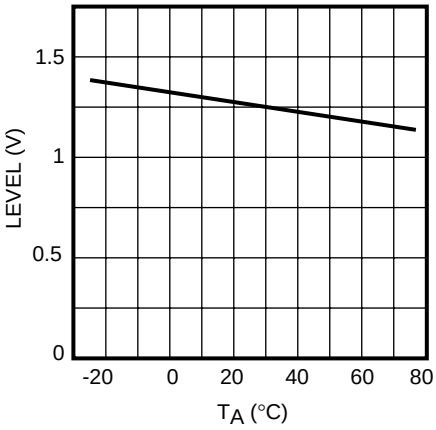

VOLTAGE GAIN vs. TEMPERATURE

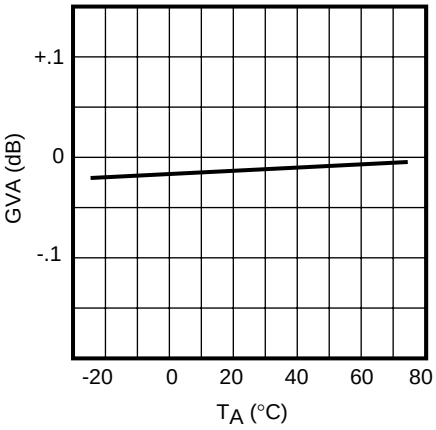

TYPICAL PERFORMANCE CHARACTERISTICS (CONT.)

V_{CC} = 8 V, T_A = 25 °C, unless otherwise specified.

RESIDUAL NOISE vs. TEMPERATURE

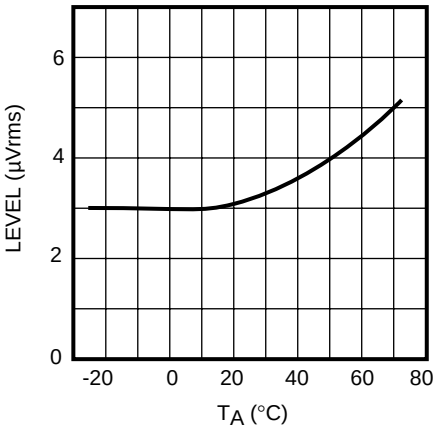

OUTPUT DIFFERENCE vs. TEMPERATURE

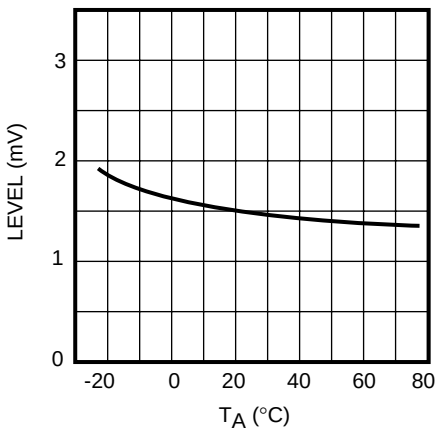

INPUT BIAS CURRENT vs. TEMPERATURE

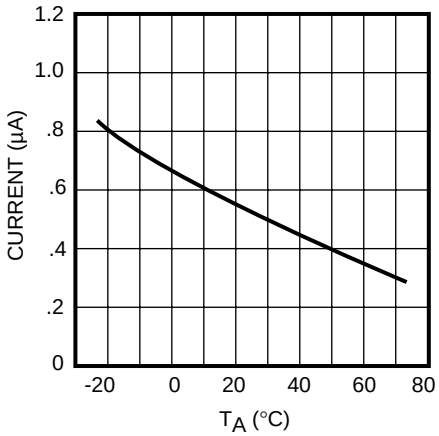

TERMINAL VOLTAGE AND CIRCUIT

Condition: V_{CC} = +4 V, V_{EE} = -4 V.

PIN NO.	ASSIGNMENT	DC VOLTAGE	CIRCUIT/FUNCTION
1	V_{CC}	+4 V	+Supply Voltage Pin
2 4 9 11	IN A, IN B Input: Open Input: 0 V	 Floating 0 V	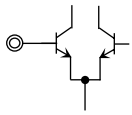 Signal Input Pin
3 10	OUT Input: Open Input: 0 V	 -3.3 V 0 V	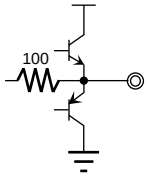 Signal Output Pin
5 8	KEY	0 V	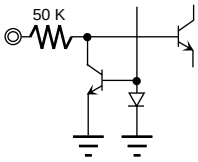 Control Pin
6	GND	0 V	Ground Pin
7	NC	Floating	No Contact Pin
12	V_{EE}	-4 V	-Supply Voltage Pin

APPLICATION INFORMATION

KEY INPUT CIRCUIT

1ch and 2ch is separate action by each control keys. Figure 11 is an equivalence circuit of key input. When terminal of key is the open, is outputting high level (about 1.4 V), and then Ach input signal is outputted. The channel at TK15326M can be changed by high level.

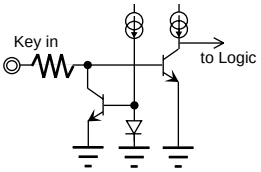

Figure 11

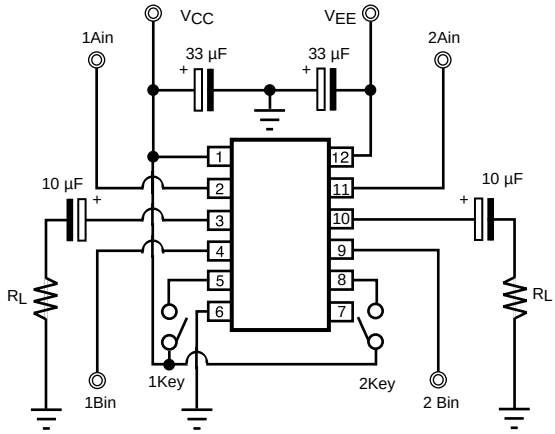

Figure 13

SWITCHING TIME

This time is the signal change response time compared to the control key input signal. Figure 12 illustrates the timimg chart. T = 2 µs typically.

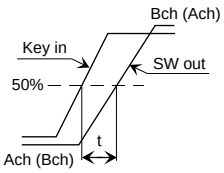

Figure 12

APPLICATION

Figure 13 illustrates an example of a typical application. The standard application is to use direct coupling at GND level at the inputs and outputs of the TK15326M. For characteristics of distortion and dynamic range versus R_L, refer to the graphs in the Typical Performance Characteristics. The TK15326M can be used at the capacitor coupling too, but then the bias supply is necessary from the GND level.

CROSS TALK (ISOLATION AND SEPARATION)

Figure 14 is an example of a layout pattern. As the TK15326M is a direct coupling type, the influence by applications is not almost. But, if it is coupled at the capacitor, by high impedance at input, capacitors acccomplishes the antenna action each other. Then in case its parts are bigger, and the space between capacitors is too narrow, cross talk will increase. Therefore, when designing the print circuit pattern, separate the input capacitors as far as possible and use smaller parts. (e.g., surface mount type)

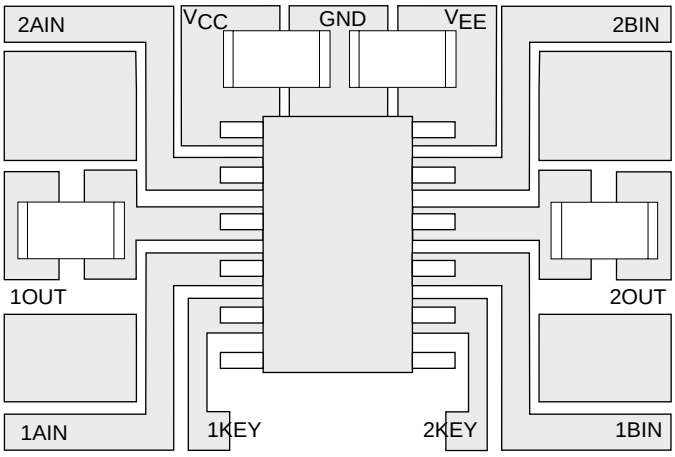

Figure 14

APPLICATION INFORMATION (CONT.)

OUTPUT TERMINAL VOLTAGE DIFFERENCE

This parameter is the output voltage difference between Ach and Bch, and appears when the channel changes from Ach to Bch, or changes to the reverse. Generally, this is called Switching Noise or Pop Noise. If this value is big and if this noise is amplified by the final amplifier and is outputted by the speakers, then it appears as a Shock Sound. Output terminal voltage difference of the TK15326M is a value that adds the internal bias difference and the off-set voltage difference. The value of the TK15326M is very small; its maximum value is 3 mV. So almost the output bias difference will be decided by the supply bias difference. Toko can offer the “Muting IC” if users wish to mute Switching Noise.

DIRECT TOUCH

The signal input terminals:
Internal circuits are operated by constant current circuit, even if V_{CC} or GND is contacted, damage does not occur.
The signal output terminal:
Outflow or inflow current is decided by ability of final transistor, but protection circuit is not attached. If GND or V_{CC} are contacted damage may occur. Pay attention to long time contact. Do not supply over the maximum rating.
Referenced to GND, do not provide to all terminals over V_{CC} +0.3 V or -0.3 V.

DC SIGNAL INPUT

The output of the TK15326M has a saturation voltage (both V_{CC} and V_{EE} sides about 1.0 V); accordingly the use of a DC signal is not recommend (e.g., the pulse signal etc.)

NC TERMINAL

NC terminals are not wired inside IC by bonding wire. NC terminals are not tested so do not connect at outside.

PACKAGE OUTLINE

SSOP-12

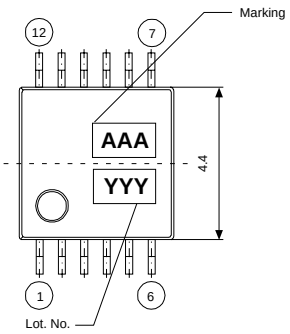

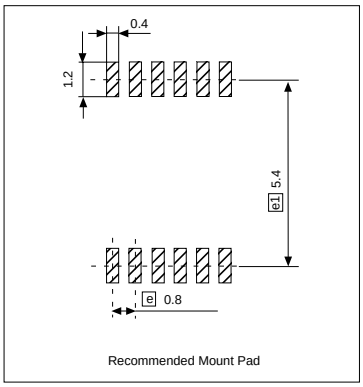

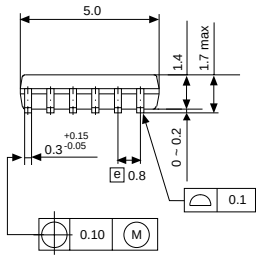

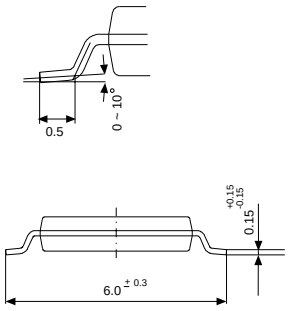

Dimensions are shown in millimeters
Tolerance: x.x = ± 0.2 mm (unless otherwise specified)

Marking Information

TK15326M	326

TOKO

Toko America, Inc. Headquarters
1250 Feehanville Drive, Mount Prospect, Illinois 60056
Tel: (847) 297-0070 Fax: (847) 699-7864

TOKO AMERICA REGIONAL OFFICES

Midwest Regional Office
Toko America, Inc.
1250 Feehanville Drive
Mount Prospect, IL 60056
Tel: (847) 297-0070
Fax: (847) 699-7864

Western Regional Office
Toko America, Inc.
2480 North First Street , Suite 260
San Jose, CA 95131
Tel: (408) 432-8281
Fax: (408) 943-9790

Eastern Regional Office
Toko America, Inc.
107 Mill Plain Road
Danbury, CT 06811
Tel: (203) 748-6871
Fax: (203) 797-1223

Semiconductor Technical Support
Toko Design Center
4755 Forge Road
Colorado Springs, CO 80907
Tel: (719) 528-2200
Fax: (719) 528-2375

Visit our Internet site at http://www.tokoam.com

The information furnished by TOKO, Inc. is believed to be accurate and reliable. However, TOKO reserves the right to make changes or improvements in the design, specification or manufacture of its products without further notice. TOKO does not assume any liability arising from the application or use of any product or circuit described herein, nor for any infringements of patents or other rights of third parties which may result from the use of its products. No license is granted by implication or otherwise under any patent or patent rights of TOKO, Inc.