查询W9986D供应商 捷多邦，专业PCB打样工厂，24小时加急出货

Winbond Electronics Corp.

MPEG Audio Layer III Decoder

GENERAL DESCRIPTION

The W9986D is a highly integrated USB MPEG audio decoder chip with Digital Voice Recorder (DVR) function built-in. This MPEG Layer III audio decoder is capable of decoding layer III compressed streams, as specified in MPEG 1 and MPEG 2 ISO standards. And it also has integrated many peripheral controllers such that it can directly interface to audio codec, flash memory, USB, etc, to minimize PC board area and system cost.

FEATURES

Single-chip MPEG Audio Decoder with Voice Recoder /Decoder

- 48 MIPS 16-bit DSP with internal OM and DM for MPEG audio decoder and DVR function
- 48 MHz double-frequency W78C58 micro controller with internal 64Kbytes program ROM and 6 Kbytes data RAM
- I^2S and SSI audio codec serial interface
- SmartMedia, CompactFlash and MMC flash memory interface. Hardware for SmartMedia ECC and MMC CRC generation
- USB 1.1 full speed interface that support Control, Bulk-In, Bulk-Out and Interrupt-In transfer by hardware or 8051 software
- 24 GPIO for keypad and system control

MPEG 1/2/2.5 Layer3 Decoder

- ISO/IEC 11172-3 MPEG 1 audio layer 3 decoder
- ISO/IEC 13818-3.2 MPEG 2 audio layer 3 decoder
- MPEG 2.5 lower sampling frequencies audio decoder
- Support all the sampling frequencies of 48, 44.1, 32, 27.4, 22.05, 16, 12, 11.025, and 8 KHz

Low Bit Rate DVR (Digital Voice Recorder)

- 5.3/6.3 Kbps bit rate voice recording
- 8KHz voice sampling frequency with 16-bit resolution
- Support Silence-Detection and Comfort-Noise-generation

Digital Sound Control

- Digital volume control and stereo channel mixer
- Digital bass and treble control

Low power 2.5V (core) and 3.3V (I/O) Operation, with 5V input tolerance

128-pin LQFP Package

APPLICATIONS

Following figure shows a typical portable player using W9986D.

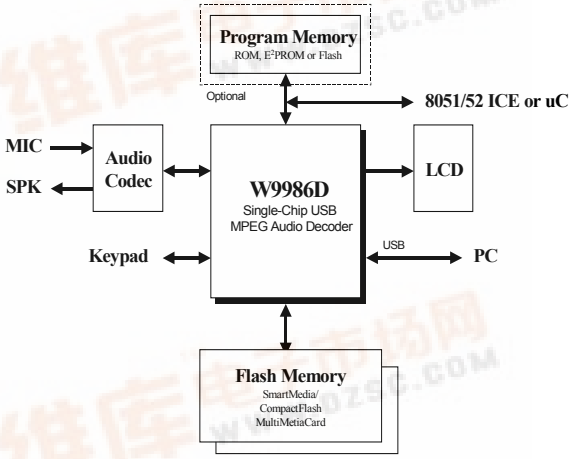

Winbond Corporate Headquarters
Tel: 886-3-5790666
Fax: 886-3-5796139

Taipei Sales Office
Tel: 886-2-27190505
Fax: 886-2-27197502

Winbond Electronics North America Corp.
Tel: 1-408-943666
Fax: 1-408-9436668

Winbond Electronics H.K. Ltd.
Tel: 852-27513100
Fax: 852-27552064

找PDF 维库 pdf.dzsc.com