查询120220-0113供应商 捷多邦，专业PCB打样工厂，24小时加急出货

LPC Dual Port

This unique connector allows dual connection to both cellular and satellite frequencies. As with the other LPC connectors it caters for offset mating.

The LPC Dual Port is surface mountable, easy to assemble and very robust. It is 100% inspected and packed in tape and reel packaging.

Materials and Finishes

Shell	Brass, Gold Plated
Upper Insulator	Black LCP
Lower Insulator	Black LCP
Signal Contact	Beryllium Copper, leg inserted with Brass Pin, Gold Plated

Part Number	Description
120220-0113	PCB Connector

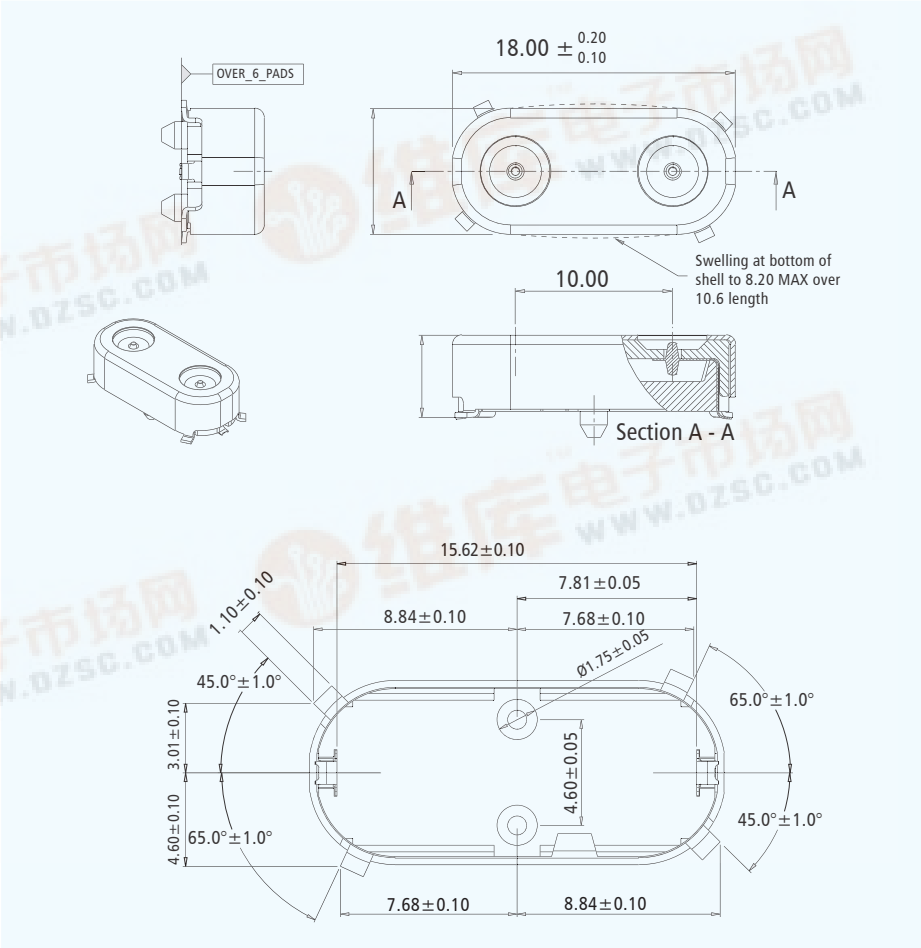

Dimensions are shown in mm.
Dimensions subject to change

找PDF 鲸一下 pdf.dzsc.com