查询100NXXAE供应商 捷多邦，专业PCB打样工厂，24小时加急出货

Anaren

Model 100NXXAE

RoHS Compliant

Full Flange Attenuators
100 Watts

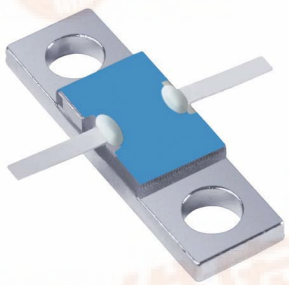

100N30AE SHOWN (NO MARKING)

Features:

- DC – See table
- 100 Watts
- ALN Ceramic
- Welded Silver Leads
- Non-Nichrome Resistive Element
- Low VSWR
- 100% Tested

General Specifications

Resistive Element	Thick film
Substrate	ALN ceramic
Cover	Alumina Ceramic
Mounting Flange	Copper, Nickel plated per QQ-N-290
Lead(s):	99.99% pure silver (.006" thick)
Operating Temperature	-55 to +150°C (see chart)

Electrical Specifications

Attenuation Range:	1, 2, 3, 4, 5, 6, 9, 10, 20, 30 db
Frequency Range:	DC – See Chart
Power:	100 Watts
V.S.W.R.:	See Chart

Notes: Tolerance is ±0.010", unless otherwise specified. Designed to meet of exceed applicable portions of MIL-E-5400. All dimensions in inches. Lead length 0.150" minimum.
Specifications subject to change without notice.

Outline Drawing

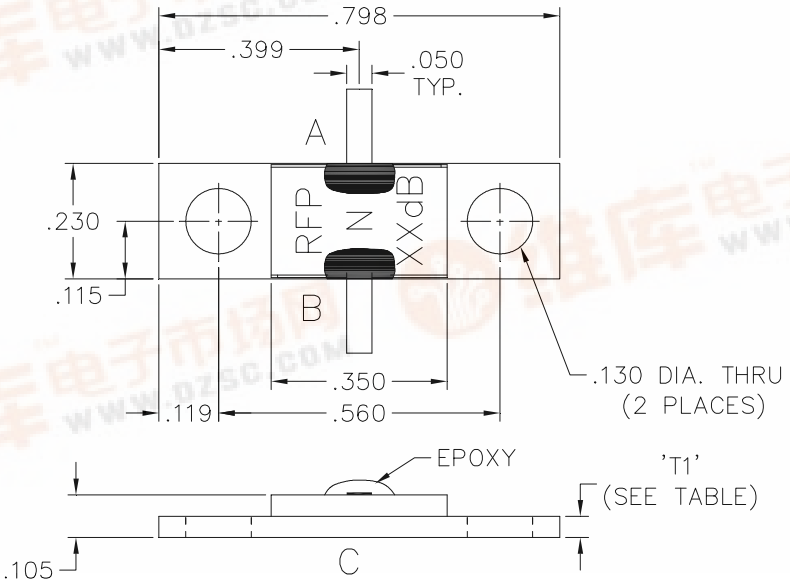

NOTE: 100N30AE IS NOT MARKED

Anaren
USA/Canada: (315) 432-8909
Toll Free: (800) 544-2414

找PDF 维库一下 pdf.dzsc.com

Model 100NXXAE

RoHS Compliant

Specifications

RESISTOR VALUE CHART							
ATTENUATION	VALUE (A–B)	VALUE (A–C)	VALUE (B–C)	TOL.	FREQUENCY	R.F.P. STOCK P/N	'T1'
1dB±0.25dB	4.8Ω	435 Ω	435 Ω	±4%	DC–2.2GHz.	RFP–100N1AE	.042
1.5dB±0.30dB	7.4Ω	294 Ω	294 Ω	±4%	DC–2.2GHz.	RFP–100N1R5AE	.042
2dB±0.40dB	9.6Ω	232 Ω	232 Ω	±4%	DC–2.2GHz.	RFP–100N2AE	.042
3dB±0.40dB	15.2Ω	155 Ω	155 Ω	±4%	DC–2.5GHz.	RFP–100N3AE	.042
4dB±0.40dB	22Ω	151Ω	151Ω	±4%	DC–2.5GHz.	RFP–100N4AE	.042
5dB±0.40dB	28.5Ω	94.7Ω	94.7Ω	±4%	DC–3.0GHz.	RFP–100N5AE	.042
6dB±0.40dB	33.7Ω	82.5 Ω	82.5 Ω	±4%	DC–3.0GHz.	RFP–100N6AE	.042
9dB±0.75dB	50.6Ω	64.1Ω	64.1Ω	±4%	DC–2.2GHz.	RFP–100N9AE	.042
10dB±0.75dB	54.0Ω	59.8Ω	59.8Ω	±4%	DC–2.2GHz.	RFP–100N10AE	.042
20dB±0.50dB	81.7Ω	50.9 Ω	50.9 Ω	±4%	DC–2.0GHz.	RFP–100N20AE	.062
30dB±1.00dB	94Ω	50.1Ω	50.1Ω	±4%	DC–2.5GHz.	RFP–100N30AE	.062

Suggested Mounting Procedure:

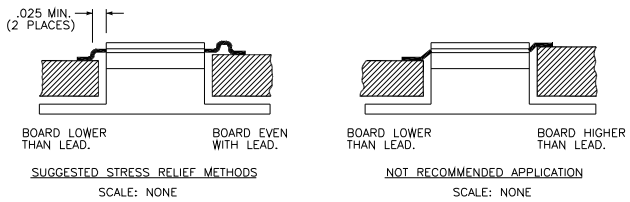

SUGGESTED MOUNTING PROCEDURES:

1. MAKE SURE THAT THE DEVICES ARE MOUNTED ON FLAT SURFACES (.001" UNDER THE DEVICE) TO OPTIMIZE THE HEAT TRANSFER.
2. POSITION DEVICE ON MOUNTING SURFACE AND SOLDER IN PLACE USING APPROPRIATE TYPE SOLDER.
3. SOLDER LEADS IN PLACE USING APPROPRIATE TYPE SOLDER WITH A CONTROLLED TEMPERATURE IRON.

Power Derating:

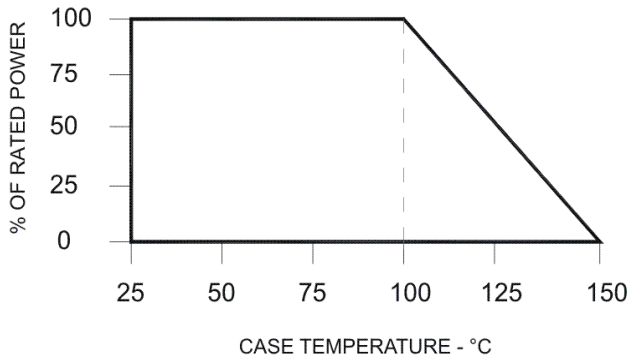

USA/Canada: (315) 432-8909