SEME LAB

2N6659

MECHANICAL DATA
Dimensions in mm (inches)

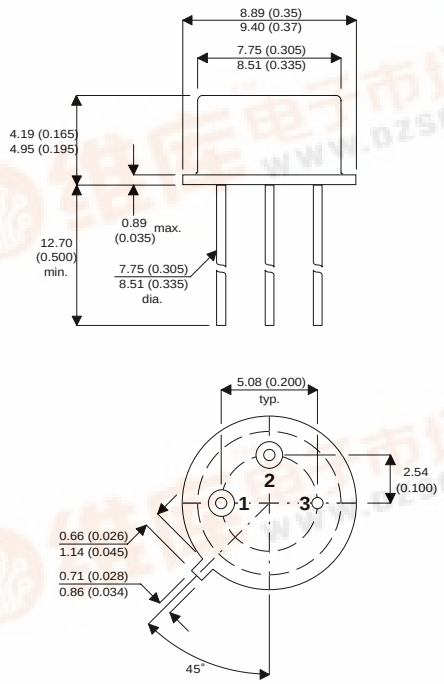

TO–39 METAL PACKAGE

Underside View

PIN 1 – Source
PIN 2 – Gate
PIN 3 – Drain
CASE – Drain

N–CHANNEL ENHANCEMENT MODE MOS TRANSISTOR

FEATURES

- **Switching Regulators**
- **Converters**
- **Motor Drivers**

ABSOLUTE MAXIMUM RATINGS (T_{CASE} = 25°C unless otherwise stated)

V_{DS}	Drain – Source Voltage		35V
V_{GS}	Gate – Source Voltage		±20V
I_D	Drain Current	@ T_{CASE} = 25°C	1.4A
I_D	Drain Current	@ T_{CASE} = 100°C	1A
I_{DM}	Pulsed Drain Current *		3A
P_D	Power Dissipation	@ T_{CASE} = 25°C	6.25W
P_D	Power Dissipation	@ T_{CASE} = 100°C	2.5W
T_j	Operating Junction Temperature Range		–55 to 150°C
T_{stg}	Storage Temperature Range		–55 to 150°C
T_L	Lead Temperature ($^1/_{16}$" from case for 10 sec.)		300°C

* Pulse width limited by maximum junction temperature.

ELECTRICAL CHARACTERISTICS (T_{CASE} = 25°C unless otherwise stated)

	Parameter	Test Conditions		Min.	Typ.	Max.	Unit
	STATIC CHARACTERISTICS						
$V_{(BR)DSS}$	Gate – Source Breakdown Voltage	V_{GS} = 0V	I_D = 10μA	35	70		V
$V_{GS(th)}$	Gate Threshold Voltage	V_{DS} = V_{GS}	I_D = 1mA	0.8	1.6	2	
I_{GSS}	Gate – Body Leakage Current	V_{GS} = ±15V				±100	nA
		V_{DS} = 0V	T_{CASE} = 125°C			±500	
I_{DSS}	Zero Gate Voltage Drain Current	V_{DS} = 90V	V_{GS} = 0V			10	μA
		V_{DS} = 72V	V_{GS} = 0V T_{CASE} = 125°C			500	
$I_{D(on)*}$	On–State Drain Current	V_{DS} = 15V	V_{GS} = 10V	1.5	1.8		A
$R_{DS(on)*}$	Drain – Source On Resistance	V_{GS} = 5V	I_D = 0.3A		1.8	5	Ω
		V_{GS} = 10V			1.3	1.8	
		I_D = 1A	T_{CASE} = 125°C		2.6	3.6	
$V_{DS(on)*}$	Drain – Source On Voltage	V_{GS} = 5V	I_D = 0.3A		0.54	1.5	V
		V_{GS} = 10V			1.3	1.8	
		I_D = 1A	T_{CASE} = 125°C		2.6	3.6	
g_{FS*}	Forward Transconductance	V_{DS} = 10V	I_D = 0.5A	170	350		ms
g_{OS*}	Common Source Output Conductance	V_{DS} = 10V	I_D = 0.1A		1100		μs
	DYNAMIC CHARACTERISTICS						
$R_{DS(on)}$	Small Signal Drain – Source On Resistance	V_{GS} = 10V f = 1kHz	I_D = 1A		1.3	1.8	Ω
C_{ds}	Drain – Source Capacitance	V_{DS} = 24V V_{GS} = 0V f = 1MHz			30	40	pF
C_{iss}	Input Capacitance				35	50	
C_{oss}	Output Capacitance				28	40	
C_{rss}	Reverse Transfer Capacitance				2	10	
	SWITCHING CHARACTERISTICS						
t_{ON}	Turn–On Time	V_{DD} = 25V R_L = 23Ω I_D = 1A	V_{GEN} = 10V R_G = 25Ω		8	10	ns
t_{OFF}	Turn–Off Time				9	10	

* Pulse Test: $t_p \leq 80$ μs , $\delta \leq 1\%$