查询2SC5127供应商 捷多邦，专业PCB打样工厂，24小时加急出货

2SC5127, 2SC5127A

Silicon NPN triple diffusion planar type

For high breakdown voltage high-speed switching

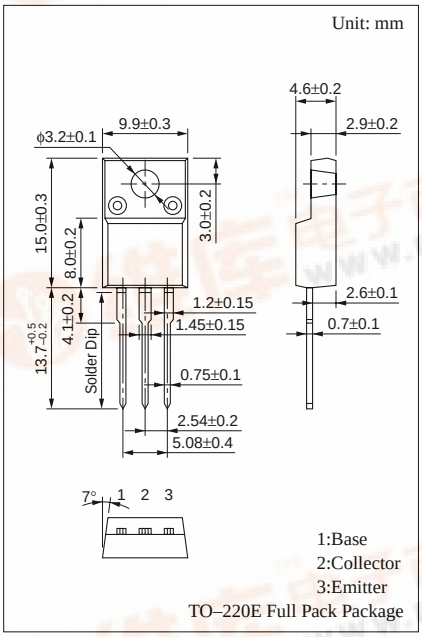

Features

- High-speed switching
- High collector to base voltage V_{CBO}
- Wide area of safe operation (ASO)
- Full-pack package with outstanding insulation, which can be installed to the heat sink with one screw

Absolute Maximum Ratings (T_C=25˚C)

Parameter		Symbol	Ratings	Unit
Collector to base voltage	2SC5127	V_{CBO}	800	V
	2SC5127A		900	
Collector to emitter voltage	2SC5127	V_{CES}	800	V
	2SC5127A		900	
Collector to emitter voltage		V_{CEO}	500	V
Emitter to base voltage		V_{EBO}	8	V
Peak collector current		I_{CP}	3.0	A
Collector current		I_C	1.5	A
Base current		I_B	0.5	A
Collector power dissipation	T_C=25°C	P_C	25	W
	Ta=25°C		2	
Junction temperature		T_j	150	˚C
Storage temperature		T_{stg}	–55 to +150	˚C

Electrical Characteristics (T_C=25˚C)

Parameter		Symbol	Conditions	min	typ	max	Unit
Collector cutoff current	2SC5127	I_{CBO}	V_{CB} = 800V, I_E = 0			100	µA
	2SC5127A		V_{CB} = 900V, I_E = 0			100	
Emitter cutoff current		I_{EBO}	V_{EB} = 5V, I_C = 0			100	µA
Collector to emitter voltage		V_{CEO}	I_C = 10mA, I_B = 0	500			V
Forward current transfer ratio		h_{FE1}	V_{CE} = 5V, I_C = 0.1A	15			
		h_{FE2}	V_{CE} = 5V, I_C = 0.6A	8			
Collector to emitter saturation voltage		$V_{CE(sat)}$	I_C = 0.6A, I_B = 0.17A			1.0	V
Base to emitter saturation voltage		$V_{BE(sat)}$	I_C = 0.6A, I_B = 0.17A			1.5	V
Transition frequency		f_T	V_{CE} = 10V, I_C = 0.1A, f = 1MHz		20		MHz
Turn-on time		t_{on}	I_C = 0.6A, I_{B1} = 0.17A, I_{B2} = – 0.34A, V_{CC} = 200V			1.0	µs
Storage time		t_{stg}				3.0	µs
Fall time		t_f				0.3	µs

pdf.dzsc.com

P_C — Ta

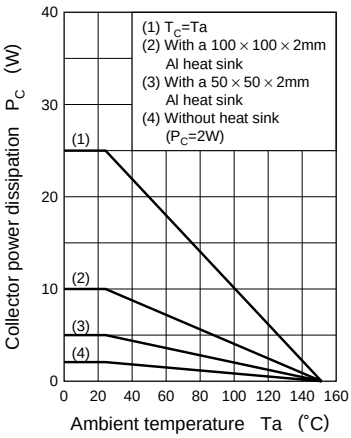

I_C — V_{CE}

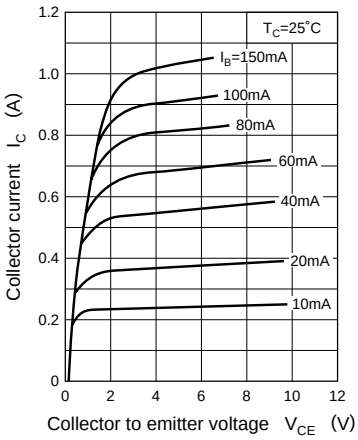

$V_{CE(sat)}$ — I_C

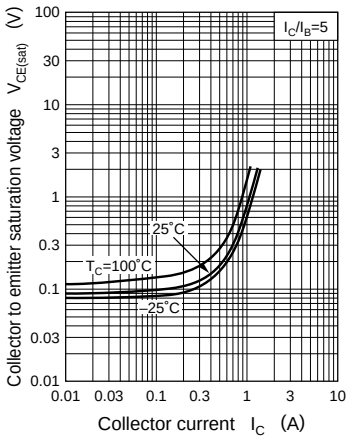

$V_{BE(sat)}$ — I_C

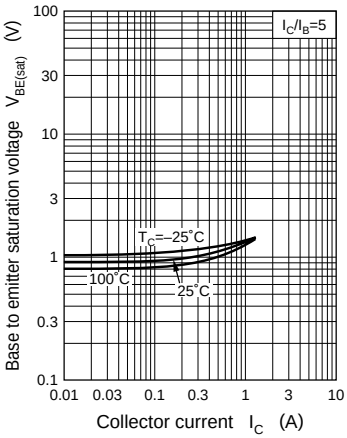

h_{FE} — I_C

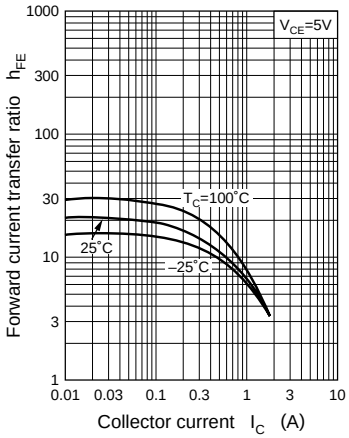

C_{ob} — V_{CB}

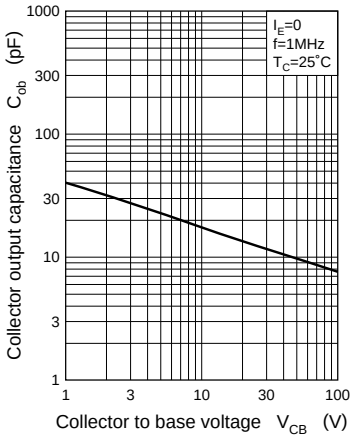

f_T — I_C

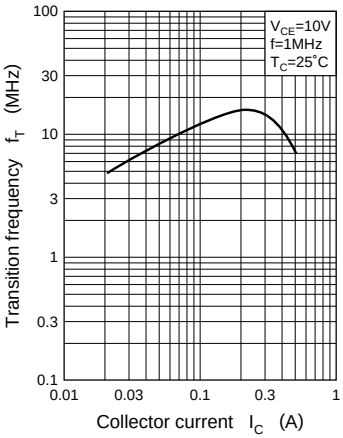

t_{on}, t_{stg}, t_f — I_C

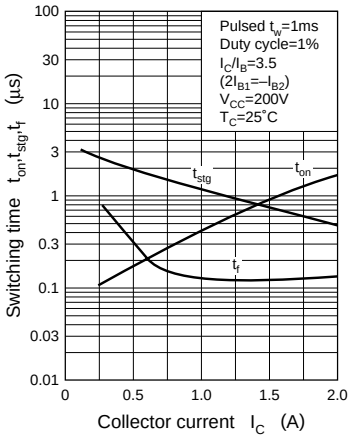

Area of safe operation (ASO)

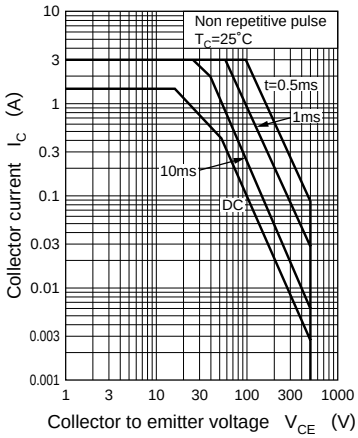

Area of safe operation, reverse bias ASO

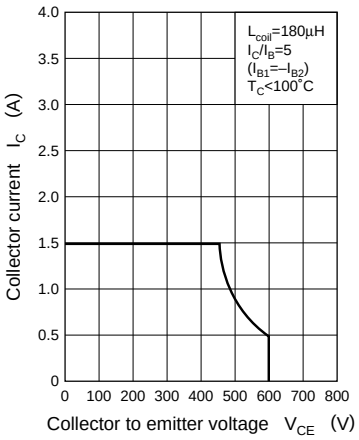

Reverse bias ASO measuring circuit

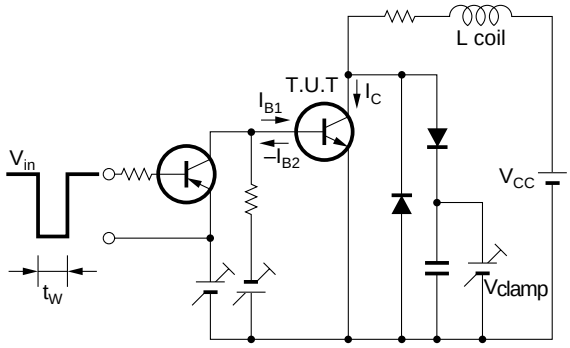
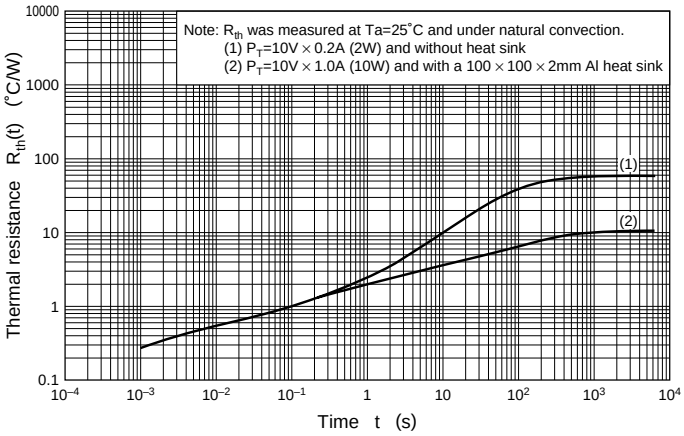
$R_{th(t)}$ — t