SHINDENGEN

VX-2 Series Power MOSFET

N-Channel Enhancement type

2SK2179
(F3E50VX2)

500V 3A

FEATURES

- Input capacitance (Ciss) is small. Especially, input capacitance at 0 biass is small.
- The static Rds(on) is small.
- The switching time is fast.

APPLICATION

- Switching power supply of AC 100V input
- High voltage power supply
- Inverter

OUTLINE DIMENSIONS

Case : E-pack

(Unit : mm)

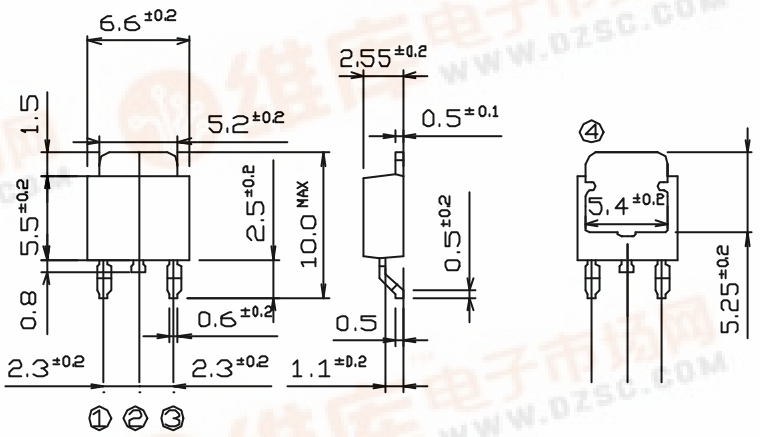

① :G
② :D
③ :S
④ :D

RATINGS

●Absolute Maximum Ratings (Tc = 25°C)

Item	Symbol	Conditions	Ratings	Unit
Storage Temperature	Tstg		-55～150	°C
Channel Temperature	Tch		150	
Drain-Source Voltage	VDSS		500	V
Gate-Source Voltage	VGSS		±30	
Continuous Drain Current (DC)	ID		3	A
Continuous Drain Current (Peak)	IDP		9	
Continuous Source Current (DC)	IS		3	
Total Power Dissipation	PT		20	W
Single Pulse Avalanche Current	IAS	Tch = 25°C	3	A

●Electrical Characteristics Tc = 25℃

Item	Symbol	Conditions	Min.	Typ.	Max.	Unit
Drain-Source Breakdown Voltage	$V_{(BR)DSS}$	I_D = 1mA, V_{GS} = 0V	500			V
Zero Gate Voltage Drain Current	I_{DSS}	V_{DS} = 500V, V_{GS} = 0V			250	μA
Gate-Source Leakage Current	I_{GSS}	V_{GS} = ±30V, V_{DS} = 0V			±0.1	
Forward Transconductance	g_{fs}	I_D = 1.5A, V_{DS} = 10V	0.9	2.1		S
Static Drain-Source On-state Resistance	$R_{DS(ON)}$	I_D = 1.5A, V_{GS} = 10V		1.8	2.3	Ω
Gate Threshold Voltage	V_{TH}	I_D = 0.3mA, V_{DS} = 10V	2.5	3.0	3.5	V
Source-Drain Diode Forwade Voltage	V_{SD}	I_S = 1.5A, V_{GS} = 0V			1.5	
Thermal Resistance	θ jc	junction to case			6.25	℃/W
Total Gate Charge	Q_g	V_{DD} = 400V, V_{GS} = 10V, I_D =3A		15		nC
Input Capacitance	C_{iss}	V_{DS} = 10V, V_{GS} = 0V, f = 1MHz		400		pF
Reverse Transfer Capacitance	C_{rss}			30		
Output Capacitance	C_{oss}			90		
Turn-On Time	t_{on}	I_D = 1.5A, V_{GS} = 10V, R_L = 100Ω		45	80	ns
Turn-Off Time	t_{off}			90	140	

2SK2179 Static Drain-Source On-state Resistance

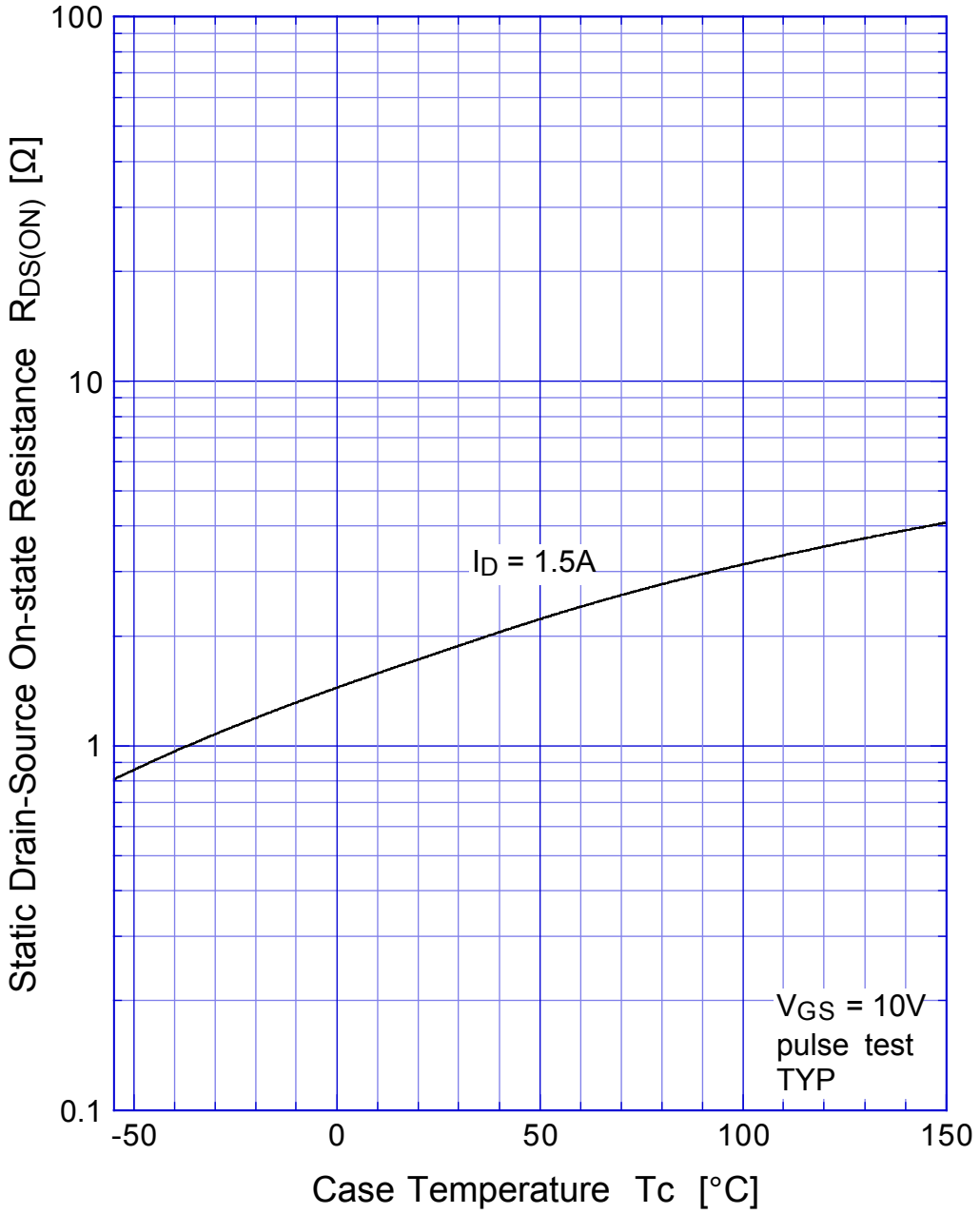

2SK2179 Gate Threshold Voltage

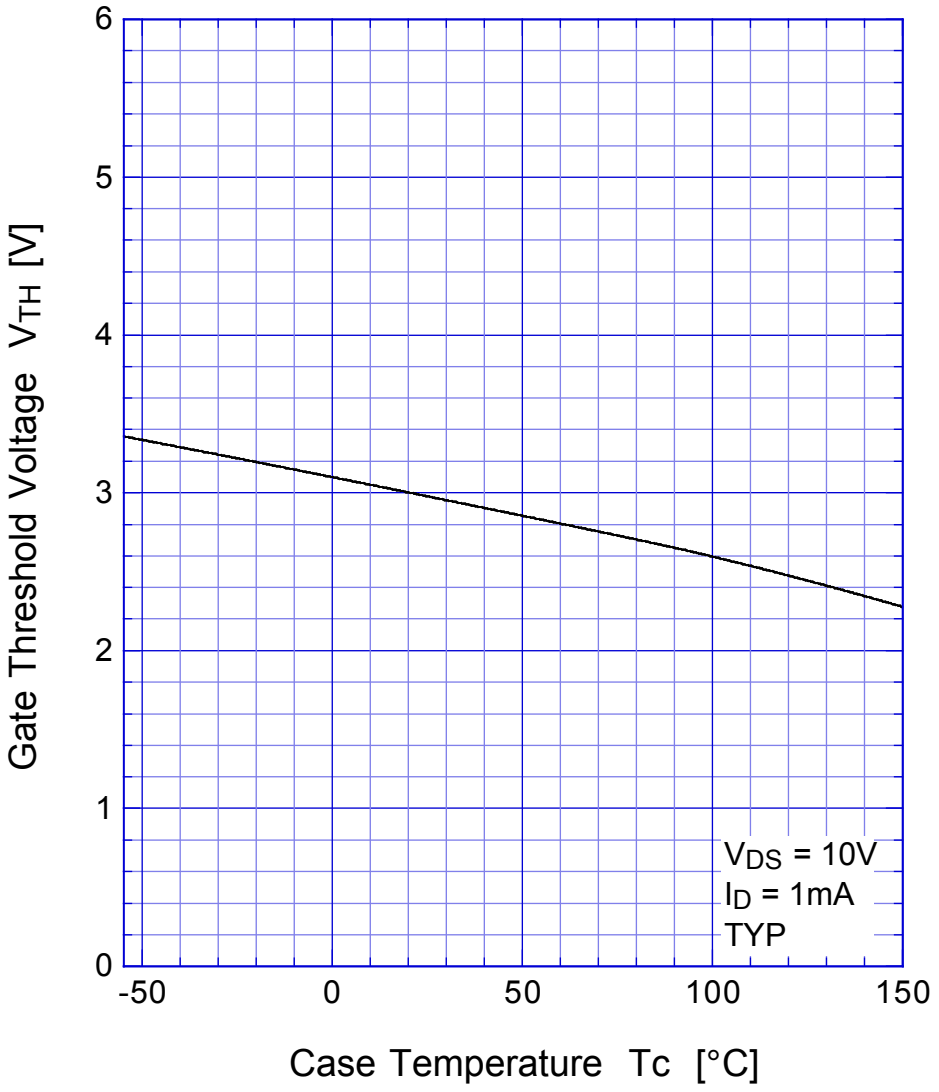

2SK2179 Transient Thermal Impedance

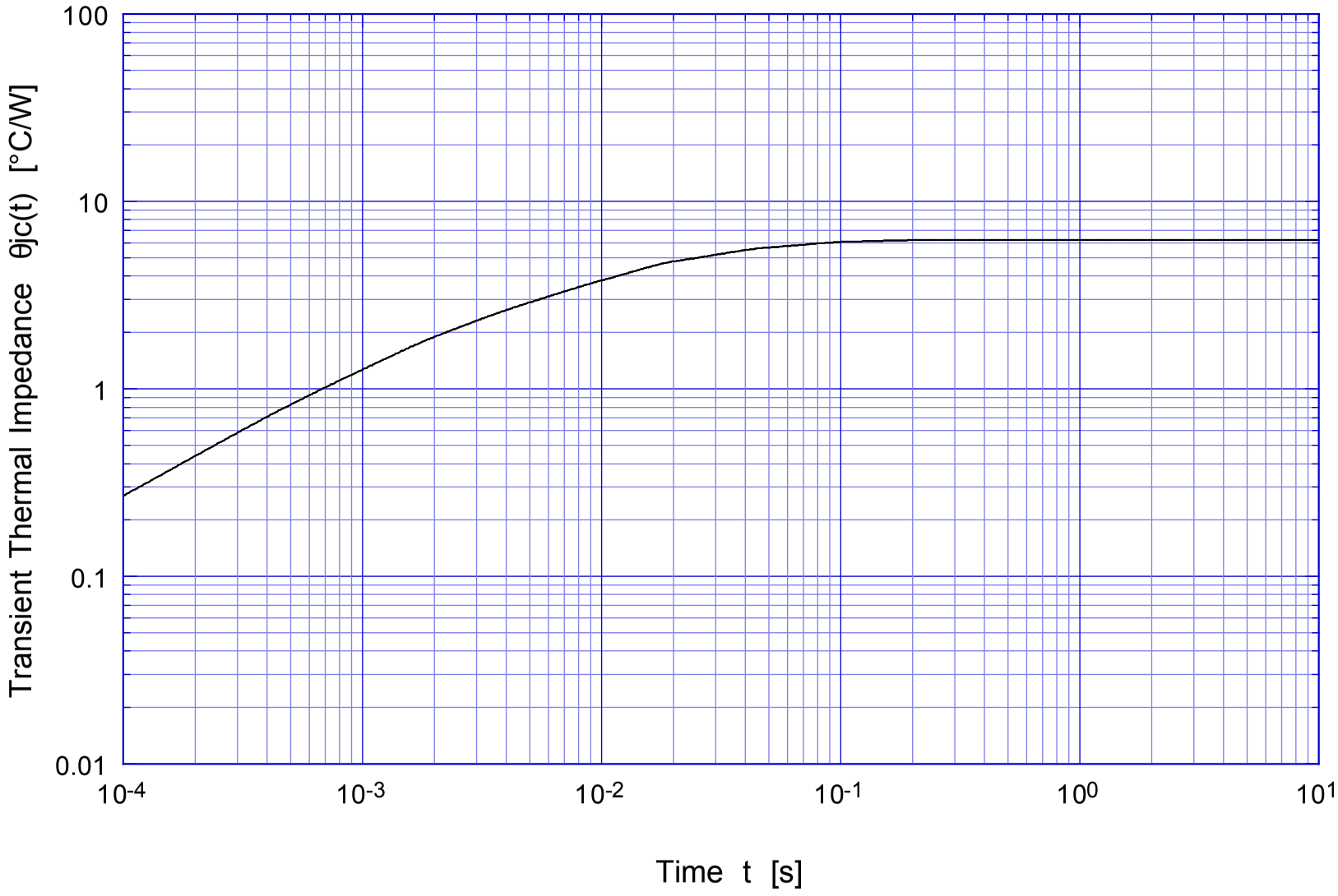

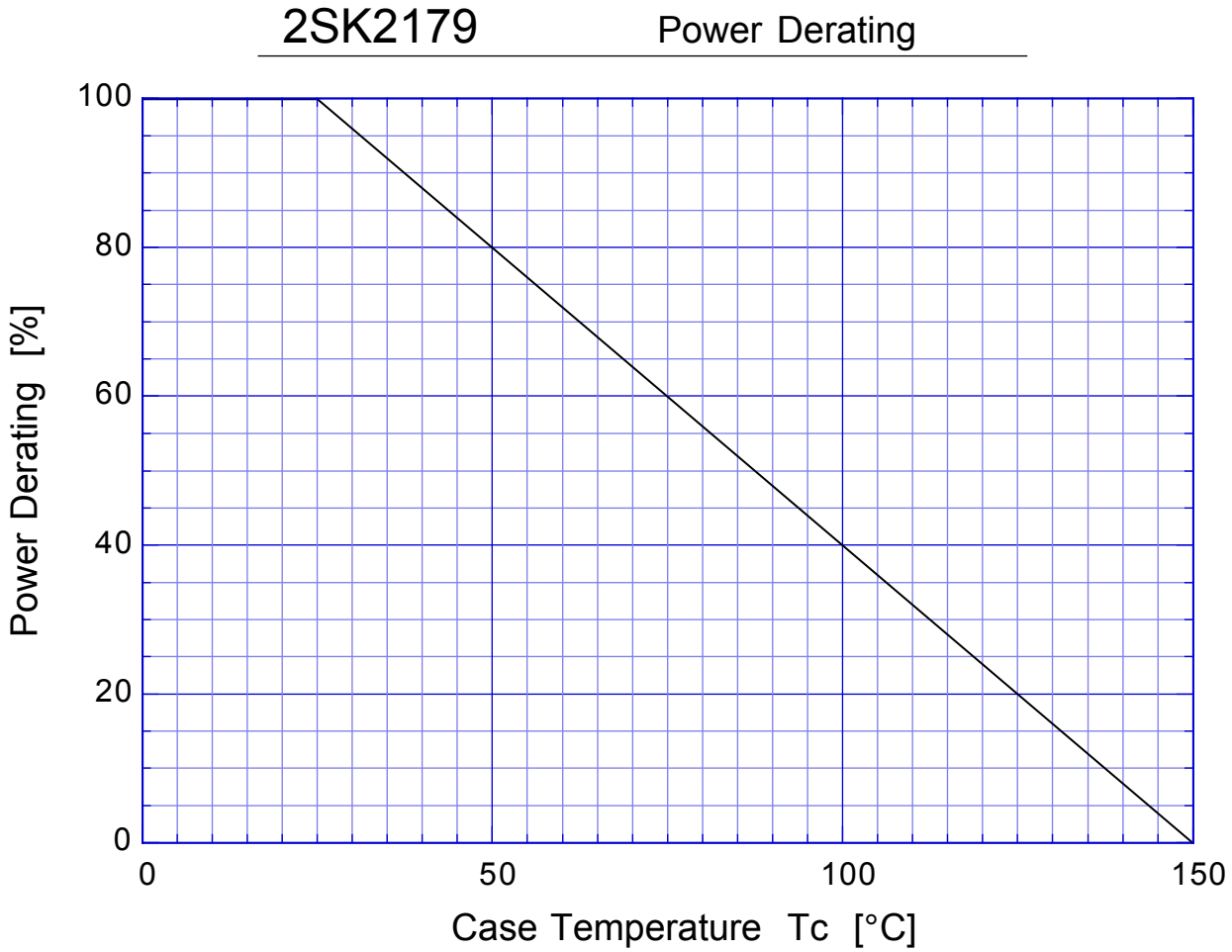
2SK2179
Power Derating
100
80
60
40
20
0
Power Derating [%]
0
50
100
150
Case Temperature Tc [°C]