查询2026-6007-20供应商 捷多邦，专业PCB打样工厂，24小时加急出货

tyco Electronics

M/A-COM

Directional Couplers, Ultra-Broadband

2026 Series
V3

Features

- Frequency Range: 0.5 - 18 GHz
- Standard Coupling Values: 10 and 20 dB
- Temperature Range: -54°C to +125°C
- Connectors: SMA per MIL-C-39012
- Isolated Port with Non-Removable 50 Ohm Termination

Description

These compact broad band couplers operate over frequency bandwidths of 12 to 1 up to 36 to 1. Each coupler is constructed in a rugged aluminum housing with Stripline circuitry. The input, output and coupled output ports are stainless steel SMA connectors. The isolated port is terminated with a non-removable precision 50 ohm termination. Custom variations of these designs to specific requirements can also be produced.

Outline Drawing

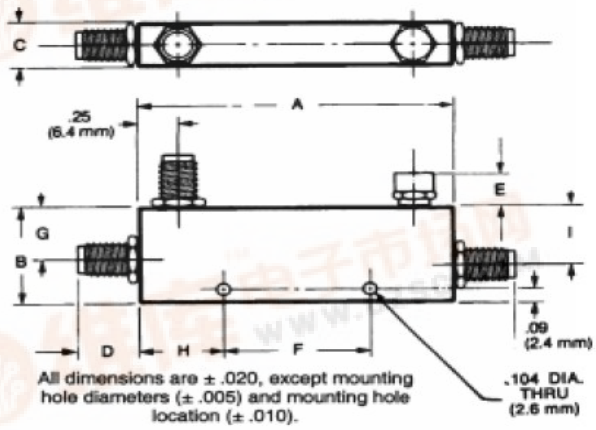

Specifications

Part Number	Case Style	Freq. Range (GHz)	Coupling (Include. Freq. Sens.(dB)	Freq. Sens. (dB)	Insertion Loss Max (dB)	Direct. Min. (dB)	VSWR Max Prim Line	Power (Input) Avg. In. (w)	Power (Input) Avg. Ref(W)	Power (Input) Pk. (kW)
2026-6001-10	1	1.0 - 12.4	10 ± 1.0	±0.4	0.35 + 0.04fGHz	18[1]	1.30	50	10	3
2026-6003-20	1	1.0 - 12.4	20 ± 1.0	±0.6	0.35 + 0.04fGHz	17	1.30	50	50	3
2026-6004-10	2	2.0 - 18.0	10 ± 1.0	±0.5	0.30 + 0.03fGHz	15[2]	1.35	50	10	3
2026-6006-20	2	2.0 - 18.0	20 ± 1.0	±0.5	0.30 + 0.03fGHz	18[3]	1.35	50	50	3
2026-6007-10	1	1.0 - 18.0	10 ± 1.0[4]	±0.5	0.30 + 0.05fGHz	15[2]	1.40	50	10	3
2026-6009-20	1	1.0 - 18.0	20 ± 1.0	±0.6	0.30 + 0.05fGHz	17[3]	1.40	50	50	3
2026-6010-10	3	0.5 - 18.0	10 ± 1.0	±1.0	0.90 + 0.03fGHz	15[2]	1.50	50	10	3
2026-6012-20	3	0.5 - 18.0	20 ± 1.0	±1.0	0.90 + 0.03fGHz	15	1.50	50	50	3

1. 15 dB from 8.0 to 12.4 GHz
2. 12 dB from 12.4 to 18 GHz
3. 15 dB from 12.4 t0 18 GHz
4. -1.5 to 1.0 from 0.5 to 2 GHz only

Mechanical Specifications

Case Style	A Inch (mm)	B Inch (mm)	C Inch (mm)	D Inch (mm)	E Inch (mm)	F Inch (mm)	G Inch (mm)	H Inch (mm)	I Inch (mm)	Weight oz	Weight g
1	3.8 (97)	0.69 (17.5)	0.38 (9.7)	0.38 (9.7)	0.25 (6.4)	2.31 (58.7)	0.39 (9.9)	0.75 (19)	0.44 (11.1)	2.0	56
2	2.0 (50.8)	0.69 (17.5)	0.38 (9.7)	0.38 (9.7)	0.25 (6.4)	0.95 (24.2)	0.38 (9.7)	0.53 (13.5)	0.42 (10.7)	1.3	37
3	4.4 (111.8)	0.73 (18.5)	0.38 (9.7)	0.38 (9.7)	0.25 (6.4)	2.90 (73.7)	0.48 (12.2)	0.75 (19)	0.48 (12.2)	2.5	71

M/A-COM Inc. and its affiliates reserve the right to make changes to the product(s) or information contained herein without notice. M/A-COM makes no warranty, representation or guarantee regarding the suitability of its products for any particular purpose, nor does M/A-COM assume any liability

- **North America** Tel: 800.366.2266 / Fax: 978.366.2266
- **Europe** Tel: 44.1908.574.200 / Fax: 44.1908.574.300
- **Asia/Pacific** Tel: 81.44.844.8296 / Fax: 81.44.844.8298