查询74VCX16374DTR供应商 捷多邦，专业PCB打样工厂，24小时加急出货

74VCX16374

Low-Voltage 1.8/2.5/3.3V 16-Bit D-Type Flip-Flop

With 3.6 V−Tolerant Inputs and Outputs (3−State, Non−Inverting)

ON Semiconductor®

http://onsemi.com

The 74VCX16374 is an advanced performance, non−inverting 16−bit D−type flip−flop. It is designed for very high−speed, very low−power operation in 1.8 V, 2.5 V or 3.3 V systems. The VCX16374 is byte controlled, with each byte functioning identically, but independently. Each byte has separate Output Enable and Clock Pulse inputs. These control pins can be tied together for a full 16−bit operation.

When operating at 2.5 V (or 1.8 V) the part is designed to tolerate voltages it may encounter on either inputs or outputs when interfacing to 3.3 V busses. It is guaranteed to be overvoltage tolerant to 3.6 V.

The 74VCX16374 consists of 16 edge−triggered flip−flops with individual D−type inputs and 3.6 V−tolerant 3−state outputs. The clocks (CPn) and Output Enables ($\overline{OEn}$) are common to all flip−flops within the respective byte. The flip−flops will store the state of individual D inputs that meet the setup and hold time requirements on the LOW−to−HIGH Clock (CP) transition. With the $\overline{OE}$ LOW, the contents of the flip−flops are available at the outputs. When the $\overline{OE}$ is HIGH, the outputs go to the high impedance state. The $\overline{OE}$ input level does not affect the operation of the flip−flops.

Features

- Designed for Low Voltage Operation: V_{CC} = 1.65 V − 3.6 V
- 3.6 V Tolerant Inputs and Outputs
- High Speed Operation: 3.0 ns max for 3.0 V to 3.6 V
  3.9 ns max for 2.3 V to 2.7 V
  7.8 ns max for 1.65 V to 1.95 V
- Static Drive: ±24 mA Drive at 3.0 V
  ±18 mA Drive at 2.3 V
  ±6 mA Drive at 1.65 V
- Supports Live Insertion and Withdrawal
- I_{OFF} Specification Guarantees High Impedance When V_{CC} = 0 V
- Near Zero Static Supply Current in All Three Logic States (20 μA) Substantially Reduces System Power Requirements
- Latchup Performance Exceeds ±250 mA @ 125°C
- ESD Performance: Human Body Model >2000 V
  Machine Model >200 V
- All Devices in Package TSSOP are Inherently Pb−Free*

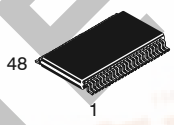

TSSOP−48
DT SUFFIX
CASE 1201

MARKING DIAGRAM

A = Assembly Location
WL = Wafer Lot
YY = Year
WW = Work Week

PIN NAMES

Pins	Function
OEn	Output Enable Inputs
CPn	Clock Pulse Inputs
D0−D15	Inputs
O0−O15	Outputs

ORDERING INFORMATION

Device	Package	Shipping†
74VCX16374DT	TSSOP (Pb−Free)	39 / Rail
74VCX16374DTR	TSSOP (Pb−Free)	2500 / Reel

†For information on tape and reel specifications, including part orientation and tape sizes, please refer to our Tape and Reel Packaging Specification Brochure, BRD8011/D.

OBSOLETE
THIS DEVICE IS OBSOLETE
PLEASE CONTACT YOUR ON SEMICONDUCTOR
REPRESENTATIVE FOR INFORMATION

*For additional information on our Pb−Free strategy and soldering details, please download the ON Semiconductor Soldering and Mounting Techniques Reference Manual, SOLDERRM/D.

找PDF 维库一下 pdf.dzsc.com

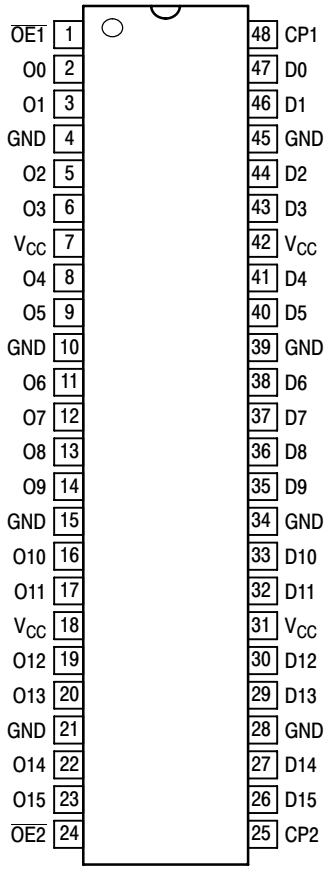

Figure 1. 48−Lead Pinout
(Top View)

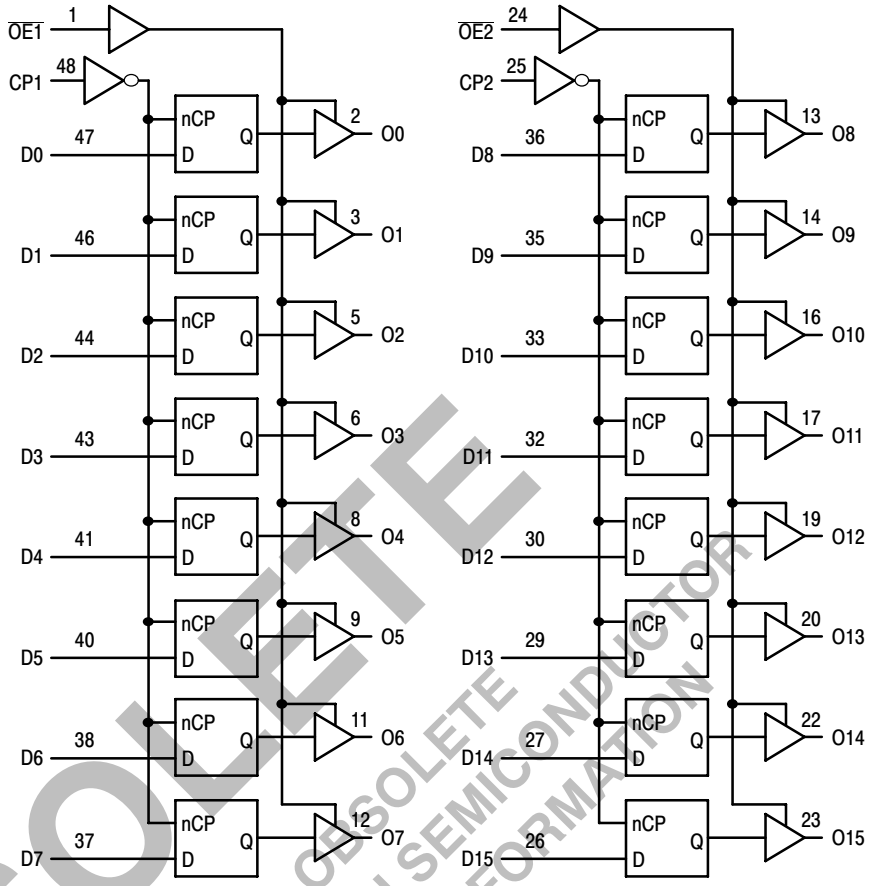

Figure 2. Logic Diagram

OBSOLETE
THIS DEVICE IS OBSOLETE
PLEASE CONTACT YOUR ON SEMICONDUCTOR
REPRESENTATIVE FOR INFORMATION

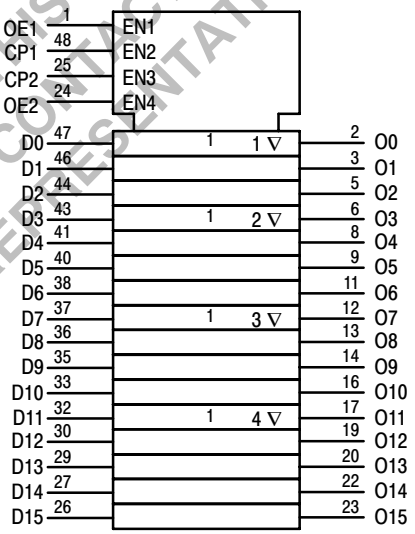

Figure 3. IEC Logic Diagram

TRUTH TABLE

Inputs			Outputs	Inputs			Outputs
CP1	OE1	D0:7	O0:7	CP2	OE2	D8:15	O8:15
↑	L	H	H	↑	L	H	H
↑	L	L	L	↑	L	L	L
X	L	X	O0	X	L	X	O0
X	H	X	Z	X	H	X	Z

H = High Voltage Level
L = Low Voltage Level
Z = High Impedance State
↑ = Low−to−High Transition
X = High or Low Voltage Level and Transitions Are Acceptable, for I_{CC} reasons, DO NOT FLOAT Inputs
O0 = No Change

ABSOLUTE MAXIMUM RATINGS

Symbol	Parameter	Value	Condition	Unit
V_{CC}	DC Supply Voltage	−0.5 to +4.6		V
V_I	DC Input Voltage	$-0.5 \le V_I \le +4.6$		V
V_O	DC Output Voltage	$-0.5 \le V_O \le +4.6$	Output in 3−State	V
		$-0.5 \le V_O \le V_{CC} + 0.5$	Note 1; Outputs Active	V
I_{IK}	DC Input Diode Current	−50	V_I < GND	mA
I_{OK}	DC Output Diode Current	−50	V_O < GND	mA
		+50	$V_O > V_{CC}$	mA
I_O	DC Output Source/Sink Current	±50		mA
I_{CC}	DC Supply Current Per Supply Pin	±100		mA
I_{GND}	DC Ground Current Per Ground Pin	±100		mA
T_{STG}	Storage Temperature Range	−65 to +150		°C

Stresses exceeding Maximum Ratings may damage the device. Maximum Ratings are stress ratings only. Functional operation above the Recommended Operating Conditions is not implied. Extended exposure to stresses above the Recommended Operating Conditions may affect device reliability.
1. I_O absolute maximum rating must be observed.

RECOMMENDED OPERATING CONDITIONS

Symbol	Parameter	Min	Typ	Max	Unit
V_{CC}	Supply Voltage Operating Data Retention Only	1.65 1.2	3.3 3.3	3.6 3.6	V
V_I	Input Voltage	−0.3		3.6	V
V_O	Output Voltage (Active State) (3−State)	0 0		V_{CC} 3.6	V
I_{OH}	HIGH Level Output Current, V_{CC} = 3.0 V − 3.6 V			−24	mA
I_{OL}	LOW Level Output Current, V_{CC} = 3.0 V − 3.6 V			24	mA
I_{OH}	HIGH Level Output Current, V_{CC} = 2.3 V − 2.7 V			−18	mA
I_{OL}	LOW Level Output Current, V_{CC} = 2.3 V − 2.7 V			18	mA
I_{OH}	HIGH Level Output Current, V_{CC} = 1.65 V − 1.95 V			−6	mA
I_{OL}	LOW Level Output Current, V_{CC} = 1.65 V − 1.95 V			6	mA
T_A	Operating Free−Air Temperature	−40		+85	°C
$\Delta t/\Delta V$	Input Transition Rise or Fall Rate, V_{IN} from 0.8 V to 2.0 V, V_{CC} = 3.0 V	0		10	ns/V

OBSOLETE
THIS DEVICE IS OBSOLETE
PLEASE CONTACT YOUR ON SEMICONDUCTOR
REPRESENTATIVE FOR INFORMATION

DC ELECTRICAL CHARACTERISTICS

Symbol	Characteristic	Condition	T_A = −40°C to +85°C Min	Max	Unit
V_{IH}	HIGH Level Input Voltage (Note 2)	1.65 V ≤ V_{CC} < 2.3 V	0.65 x V_{CC}		V
		2.3 V ≤ V_{CC} ≤ 2.7 V	1.6		
		2.7 V < V_{CC} ≤ 3.6 V	2.0		
V_{IL}	LOW Level Input Voltage (Note 2)	1.65 V ≤ V_{CC} < 2.3 V		0.35 x V_{CC}	V
		2.3 V ≤ V_{CC} ≤ 2.7 V		0.7	
		2.7 V < V_{CC} ≤ 3.6 V		0.8	
V_{OH}	HIGH Level Output Voltage	1.65 V ≤ V_{CC} ≤ 3.6 V; I_{OH} = −100 μA	V_{CC} − 0.2		V
		V_{CC} = 1.65 V; I_{OH} = −6 mA	1.25		
		V_{CC} = 2.3 V; I_{OH} = −6 mA	2.0		
		V_{CC} = 2.3 V; I_{OH} = −12 mA	1.8		
		V_{CC} = 2.3 V; I_{OH} = −18 mA	1.7		
		V_{CC} = 2.7 V; I_{OH} = −12 mA	2.2		
		V_{CC} = 3.0 V; I_{OH} = −18 mA	2.4		
		V_{CC} = 3.0 V; I_{OH} = −24 mA	2.2		
V_{OL}	LOW Level Output Voltage	1.65 V ≤ V_{CC} ≤ 3.6 V; I_{OL} = 100 μA		0.2	V
		V_{CC} = 1.65 V; I_{OL} = 6 mA		0.3	
		V_{CC} = 2.3 V; I_{OL} = 12 mA		0.4	
		V_{CC} = 2.3 V; I_{OL} = 18 mA		0.6	
		V_{CC} = 2.7 V; I_{OL} = 12 mA		0.4	
		V_{CC} = 3.0 V; I_{OL} = 18 mA		0.4	
		V_{CC} = 3.0 V; I_{OL} = 24 mA		0.55	
I_I	Input Leakage Current	1.65 V ≤ V_{CC} ≤ 3.6 V; 0 V ≤ V_I ≤ 3.6 V		±5.0	μA
I_{OZ}	3−State Output Current	1.65 V ≤ V_{CC} ≤ 3.6 V; 0 V ≤ V_O ≤ 3.6 V; V_I = V_{IH} or V_{IL}		±10	μA
I_{OFF}	Power−Off Leakage Current	V_{CC} = 0 V; V_I or V_O = 3.6 V		10	μA
I_{CC}	Quiescent Supply Current (Note 3)	1.65 V ≤ V_{CC} ≤ 3.6 V; V_I = GND or V_{CC}		20	μA
		1.65 V ≤ V_{CC} ≤ 3.6 V; 3.6 V ≤ V_I, V_O ≤ 3.6 V		±20	μA
ΔI_{CC}	Increase in I_{CC} per Input	2.7 V < V_{CC} ≤ 3.6 V; V_{IH} = V_{CC} − 0.6 V		750	μA

2. These values of V_I are used to test DC electrical characteristics only.
3. Outputs disabled or 3−state only.

OBSOLETE
THIS DEVICE IS OBSOLETE
PLEASE CONTACT YOUR ON SEMICONDUCTOR
REPRESENTATIVE FOR INFORMATION

AC CHARACTERISTICS (Note 4; $t_R = t_F = 2.0$ ns; $C_L = 30$ pF; $R_L = 500\ \Omega$)

Symbol	Parameter	Waveform	$T_A = -40°C$ to $+85°C$						Unit
			$V_{CC} = 3.0$ V to 3.6 V		$V_{CC} = 2.3$ V to 2.7 V		$V_{CC} = 1.65$ V to 1.95 V		
			Min	Max	Min	Max	Min	Max	
f_{max}	Clock Pulse Frequency	1	250		200		100		MHz
t_{PLH} t_{PHL}	Propagation Delay CP−to−On	1	0.8 0.8	3.0 3.0	1.0 1.0	3.9 3.9	1.5 1.5	7.8 7.8	ns
t_{PZH} t_{PZL}	Output Enable Time to High and Low Level	2	0.8 0.8	3.5 3.5	1.0 1.0	4.6 4.6	1.5 1.5	9.2 9.2	ns
t_{PHZ} t_{PLZ}	Output Disable Time From High and Low Level	2	0.8 0.8	3.5 3.5	1.0 1.0	3.8 3.8	1.5 1.5	6.8 6.8	ns
t_s	Setup Time, High or Low Dn−to−CP	3	1.5		1.5		2.5		ns
t_h	Hold Time, High or Low Dn−to−CP	3	1.0		1.0		1.0		ns
t_w	CP Pulse Width, High	3	1.5		1.5		4.0		ns
t_{OSHL} t_{OSLH}	Output−to−Output Skew (Note 5)			0.5 0.5		0.5 0.5		0.75 0.75	ns

4. For $C_L = 50$ pF, add approximately 300 ps to the AC maximum specification.
5. Skew is defined as the absolute value of the difference between the actual propagation delay for any two separate outputs of the same device. The specification applies to any outputs switching in the same direction, either HIGH−to−LOW (t_{OSHL}) or LOW−to−HIGH (t_{OSLH}); parameter guaranteed by design.

AC CHARACTERISTICS ($t_R = t_F = 2.0$ ns; $C_L = 50$ pF; $R_L = 500\ \Omega$)

Symbol	Parameter	Waveform	$T_A = -40°C$ to $+85°C$				Unit
			$V_{CC} = 3.0$ V to 3.6 V		$V_{CC} = 2.7$ V		
			Min	Max	Min	Max	
f_{max}	Clock Pulse Frequency	4	150		150		MHz
t_{PLH} t_{PHL}	Propagation Delay CP−to−On	4	1.0 1.0	4.2 4.2		4.9 4.9	ns
t_{PZH} t_{PZL}	Output Enable Time to High and Low Level	5	1.0 1.0	4.8 4.8		5.9 5.9	ns
t_{PHZ} t_{PLZ}	Output Disable Time From High and Low Level	5	1.0 1.0	4.3 4.3		4.7 4.7	ns
t_{OSHL} t_{OSLH}	Output−to−Output Skew (Note 6)			0.5 0.5		0.5 0.5	ns

6. Skew is defined as the absolute value of the difference between the actual propagation delay for any two separate outputs of the same device. The specification applies to any outputs switching in the same direction, either HIGH−to−LOW (t_{OSHL}) or LOW−to−HIGH (t_{OSLH}); parameter guaranteed by design.

OBSOLETE
THIS DEVICE IS OBSOLETE
PLEASE CONTACT YOUR ON SEMICONDUCTOR
REPRESENTATIVE FOR INFORMATION

DYNAMIC SWITCHING CHARACTERISTICS

Symbol	Characteristic	Condition	T_A = +25°C Typ	Unit
V_{OLP}	Dynamic LOW Peak Voltage (Note 7)	V_{CC} = 1.8 V, C_L = 30 pF, V_{IH} = V_{CC}, V_{IL} = 0 V	0.25	V
		V_{CC} = 2.5 V, C_L = 30 pF, V_{IH} = V_{CC}, V_{IL} = 0 V	0.6	
		V_{CC} = 3.3 V, C_L = 30 pF, V_{IH} = V_{CC}, V_{IL} = 0 V	0.8	
V_{OLV}	Dynamic LOW Valley Voltage (Note 7)	V_{CC} = 1.8 V, C_L = 30 pF, V_{IH} = V_{CC}, V_{IL} = 0 V	−0.25	V
		V_{CC} = 2.5 V, C_L = 30 pF, V_{IH} = V_{CC}, V_{IL} = 0 V	−0.6	
		V_{CC} = 3.3 V, C_L = 30 pF, V_{IH} = V_{CC}, V_{IL} = 0 V	−0.8	
V_{OHV}	Dynamic HIGH Valley Voltage (Note 8)	V_{CC} = 1.8 V, C_L = 30 pF, V_{IH} = V_{CC}, V_{IL} = 0 V	1.5	V
		V_{CC} = 2.5 V, C_L = 30 pF, V_{IH} = V_{CC}, V_{IL} = 0 V	1.9	
		V_{CC} = 3.3 V, C_L = 30 pF, V_{IH} = V_{CC}, V_{IL} = 0 V	2.2	

7. Number of outputs defined as “n”. Measured with “n−1” outputs switching from HIGH−to−LOW or LOW−to−HIGH. The remaining output is measured in the LOW state.
8. Number of outputs defined as “n”. Measured with “n−1” outputs switching from HIGH−to−LOW or LOW−to−HIGH. The remaining output is measured in the HIGH state.

CAPACITIVE CHARACTERISTICS

Symbol	Parameter	Condition	Typical	Unit
C_{IN}	Input Capacitance	Note 9	6	pF
C_{OUT}	Output Capacitance	Note 9	7	pF
C_{PD}	Power Dissipation Capacitance	Note 9, 10 MHz	20	pF

9. V_{CC} = 1.8 V, 2.5 V or 3.3 V; V_I = 0 V or V_{CC}.

OBSOLETE
THIS DEVICE IS OBSOLETE
PLEASE CONTACT YOUR ON SEMICONDUCTOR
REPRESENTATIVE FOR INFORMATION

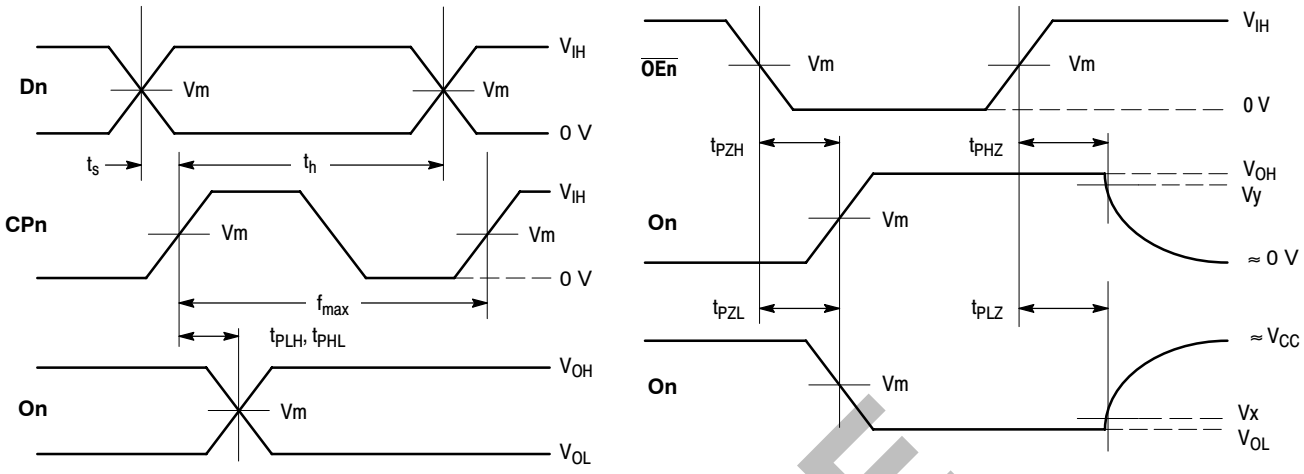

WAVEFORM 1 – PROPAGATION DELAYS, SETUP AND HOLD TIMES
$t_R = t_F$ = 2.0 ns, 10% to 90%; f = 1 MHz; t_W = 500 ns

WAVEFORM 2 – OUTPUT ENABLE AND DISABLE TIMES
$t_R = t_F$ = 2.0 ns, 10% to 90%; f = 1 MHz; t_W = 500 ns

Figure 4. AC Waveforms

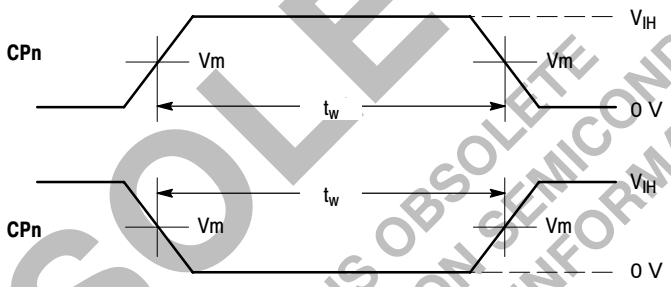

WAVEFORM 3 – PULSE WIDTH
$t_R = t_F$ = 2.0 ns (or fast as required) from 10% to 90%

Figure 5. AC Waveforms

OBSOLETE
THIS DEVICE IS OBSOLETE
PLEASE CONTACT YOUR ON SEMICONDUCTOR
REPRESENTATIVE FOR INFORMATION

Table 1. AC WAVEFORMS

Symbol	V_{CC}		
	3.3 V ± 0.3 V	**2.5 V ± 0.2 V**	**1.8 V ± 0.15 V**
V_{IH}	2.7 V	V_{CC}	V_{CC}
V_m	1.5 V	$V_{CC}/2$	$V_{CC}/2$
V_x	V_{OL} + 0.3 V	V_{OL} + 0.15 V	V_{OL} + 0.15 V
V_y	V_{OH} − 0.3 V	V_{OH} − 0.15 V	V_{OH} − 0.15 V

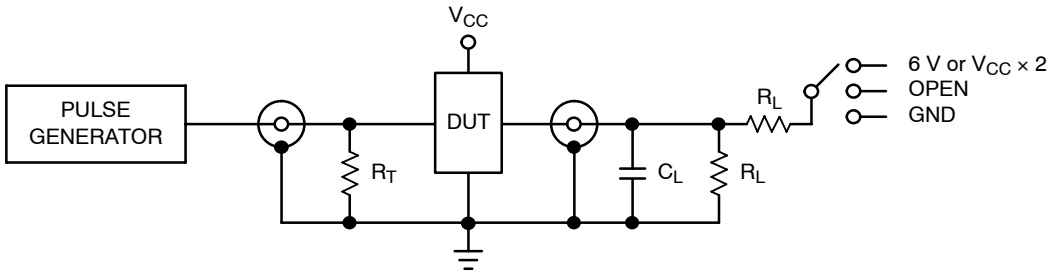

Figure 6. Test Circuit

Table 2. TEST CIRCUIT

TEST	SWITCH
t_{PLH}, t_{PHL}	Open
t_{PZL}, t_{PLZ}	6 V at V_{CC} = 3.3 ± 0.3 V; V_{CC} × 2 at V_{CC} = 2.5 ± 0.2 V; 1.8 ± 0.15 V
t_{PZH}, t_{PHZ}	GND

C_L = 30 pF or equivalent (Includes jig and probe capacitance)
R_L = 500 Ω or equivalent
R_T = Z_{OUT} of pulse generator (typically 50 Ω)

OBSOLETE
THIS DEVICE IS OBSOLETE
PLEASE CONTACT YOUR ON SEMICONDUCTOR
REPRESENTATIVE FOR INFORMATION

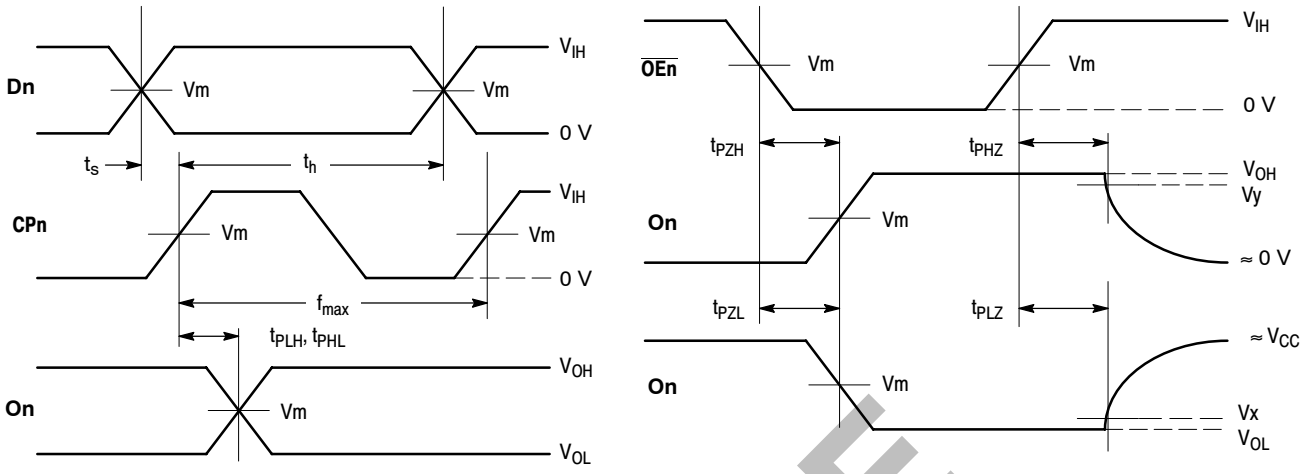

WAVEFORM 4 – PROPAGATION DELAYS, SETUP AND HOLD TIMES
$t_R = t_F$ = 2.0 ns, 10% to 90%; f = 1 MHz; t_W = 500 ns

WAVEFORM 5 – OUTPUT ENABLE AND DISABLE TIMES
$t_R = t_F$ = 2.0 ns, 10% to 90%; f = 1 MHz; t_W = 500 ns

Figure 7. AC Waveforms

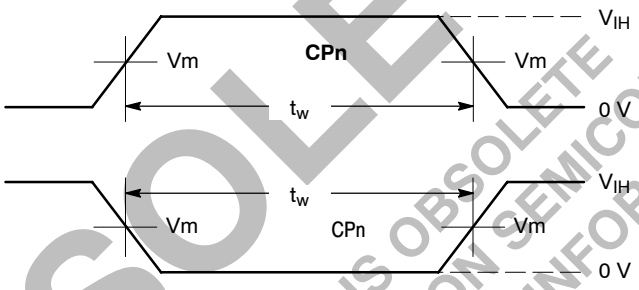

WAVEFORM 6 – PULSE WIDTH
$t_R = t_F$ = 2.0 ns (or fast as required) from 10% to 90%

Figure 8. AC Waveforms

OBSOLETE
THIS DEVICE IS OBSOLETE
PLEASE CONTACT YOUR ON SEMICONDUCTOR
REPRESENTATIVE FOR INFORMATION

Table 3. AC WAVEFORMS

Symbol	V_{CC}	
	3.3 V ± 0.3 V	**2.7 V**
V_{IH}	2.7 V	2.7 V
V_m	1.5 V	1.5 V
V_x	V_{OL} + 0.3 V	V_{OL} + 0.3 V
V_y	V_{OH} − 0.3 V	V_{OH} − 0.3 V

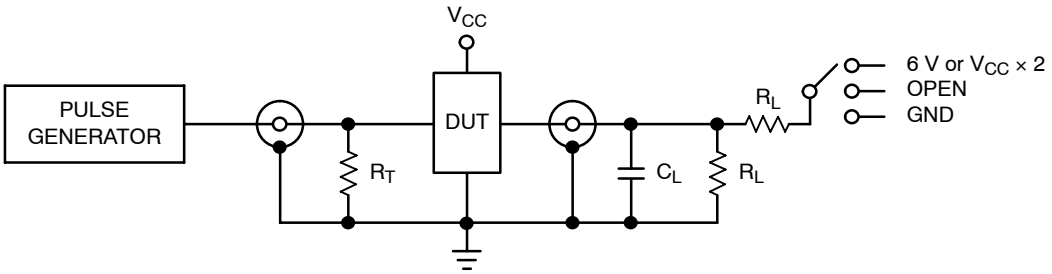

Figure 9. Test Circuit

Table 4. TEST CIRCUIT

TEST	SWITCH
t_{PLH}, t_{PHL}	Open
t_{PZL}, t_{PLZ}	6 V at V_{CC} = 3.3 ± 0.3 V; V_{CC} × 2 at V_{CC} = 2.5 ± 0.2 V; 1.8 ± 0.15 V
t_{PZH}, t_{PHZ}	GND

C_L = 50 pF or equivalent (Includes jig and probe capacitance)
R_L = 500 Ω or equivalent
R_T = Z_{OUT} of pulse generator (typically 50Ω)

OBSOLETE
THIS DEVICE IS OBSOLETE
PLEASE CONTACT YOUR ON SEMICONDUCTOR
REPRESENTATIVE FOR INFORMATION

PACKAGE DIMENSIONS

TSSOP
DT SUFFIX
CASE 1201−01
ISSUE A

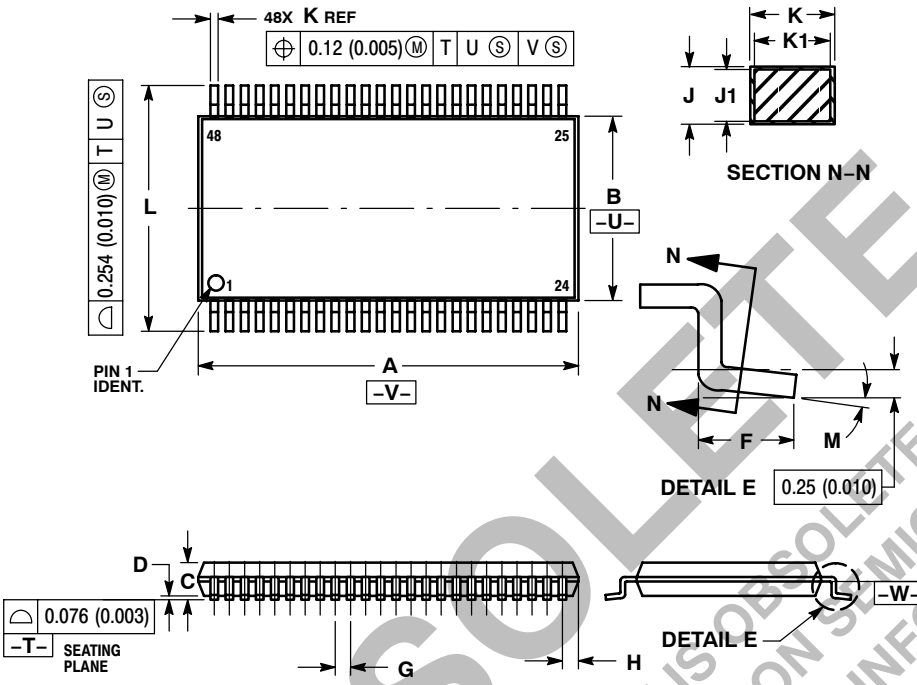

NOTES:
1. DIMENSIONING AND TOLERANCING PER ANSI Y14.5M, 1982.
2. CONTROLLING DIMENSION: MILLIMETER.
3. DIMENSIONS A AND B DO NOT INCLUDE MOLD FLASH, PROTRUSIONS OR GATE BURRS. MOLD FLASH OR GATE BURRS SHALL NOT EXCEED 0.15 (0.006) PER SIDE.
4. DIMENSION K DOES NOT INCLUDE DAMBAR PROTRUSION. ALLOWABLE DAMBAR PROTRUSION SHALL BE 0.08 (0.003) TOTAL IN EXCESS OF THE K DIMENSION AT MAXIMUM MATERIAL CONDITION.
5. TERMINAL NUMBERS ARE SHOWN FOR REFERENCE ONLY.
6. DIMENSIONS A AND B ARE TO BE DETERMINED AT DATUM PLANE −W−.

	MILLIMETERS		INCHES	
DIM	MIN	MAX	MIN	MAX
A	12.40	12.60	0.488	0.496
B	6.00	6.20	0.236	0.244
C	−−−	1.10	−−−	0.043
D	0.05	0.15	0.002	0.006
F	0.50	0.75	0.020	0.030
G	0.50 BSC		0.0197 BSC	
H	0.37	−−−	0.015	−−−
J	0.09	0.20	0.004	0.008
J1	0.09	0.16	0.004	0.006
K	0.17	0.27	0.007	0.011
K1	0.17	0.23	0.007	0.009
L	7.95	8.25	0.313	0.325
M	0 °	8 °	0 °	8 °

OBSOLETE
THIS DEVICE IS OBSOLETE
PLEASE CONTACT YOUR ON SEMICONDUCTOR
REPRESENTATIVE FOR INFORMATION

ON Semiconductor and are registered trademarks of Semiconductor Components Industries, LLC (SCILLC). SCILLC reserves the right to make changes without further notice to any products herein. SCILLC makes no warranty, representation or guarantee regarding the suitability of its products for any particular purpose, nor does SCILLC assume any liability arising out of the application or use of any product or circuit, and specifically disclaims any and all liability, including without limitation special, consequential or incidental damages. “Typical” parameters which may be provided in SCILLC data sheets and/or specifications can and do vary in different applications and actual performance may vary over time. All operating parameters, including “Typicals” must be validated for each customer application by customer’s technical experts. SCILLC does not convey any license under its patent rights nor the rights of others. SCILLC products are not designed, intended, or authorized for use as components in systems intended for surgical implant into the body, or other applications intended to support or sustain life, or for any other application in which the failure of the SCILLC product could create a situation where personal injury or death may occur. Should Buyer purchase or use SCILLC products for any such unintended or unauthorized application, Buyer shall indemnify and hold SCILLC and its officers, employees, subsidiaries, affiliates, and distributors harmless against all claims, costs, damages, and expenses, and reasonable attorney fees arising out of, directly or indirectly, any claim of personal injury or death associated with such unintended or unauthorized use, even if such claim alleges that SCILLC was negligent regarding the design or manufacture of the part. SCILLC is an Equal Opportunity/Affirmative Action Employer. This literature is subject to all applicable copyright laws and is not for resale in any manner.

PUBLICATION ORDERING INFORMATION

LITERATURE FULFILLMENT:
Literature Distribution Center for ON Semiconductor
P.O. Box 5163, Denver, Colorado 80217 USA
Phone: 303−675−2175 or 800−344−3860 Toll Free USA/Canada
Fax: 303−675−2176 or 800−344−3867 Toll Free USA/Canada
Email: orderlit@onsemi.com

N. American Technical Support: 800−282−9855 Toll Free USA/Canada
Europe, Middle East and Africa Technical Support:
Phone: 421 33 790 2910
Japan Customer Focus Center
Phone: 81−3−5773−3850

ON Semiconductor Website: **www.onsemi.com**

Order Literature: http://www.onsemi.com/orderlit

For additional information, please contact your local Sales Representative