9104 Series / Hi Voltage SIP Reed Relays

NEW!

Hi Voltage SIP Reed Relays

Molded SIP relays are the industry standard when high reliability and consistent performance are desired in a compact package. The 9104 Series adds high voltage switching capability and high voltage standoff capability to a SIP relay package. These high voltage, high performance relays are ideally suited for Automatic Test Equipment, Instrumentation, and Process Control applications where voltage isolation is a key design requirement.

Series Features

- High voltage switching up to 1000 V
- High dielectric strength (2000 V DC)
- High Insulation Resistance – 10^{11} Ω minimum
- High reliability, hermetically sealed contacts for long life
- High speed switching compared to electromechanical relays
- Molded thermoset body on integral lead frame design
- Optional Coil Suppression Diode – protects coil drive circuits
- Magnetic Shield – reduces interaction
- UL File # E67117

Model 9104

Dimensions in Inches (Millimeters)

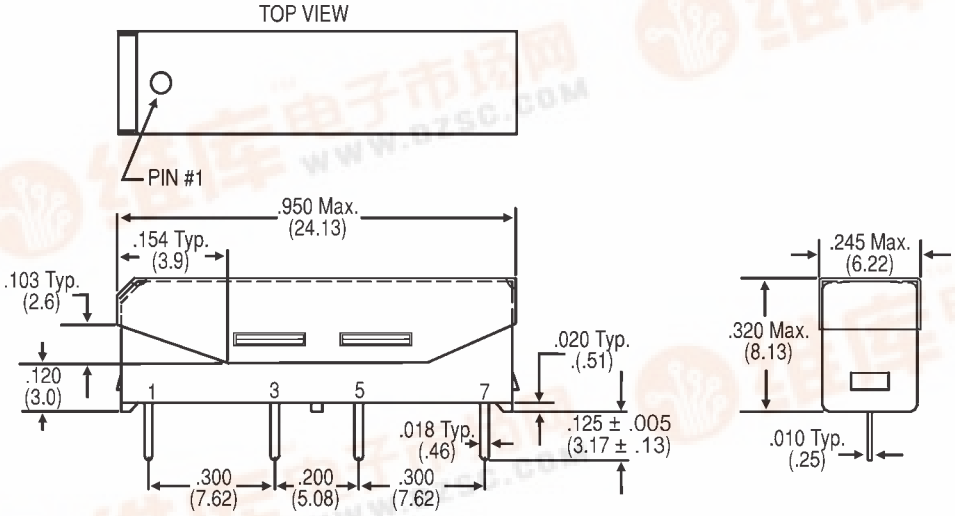

Ordering Information

Part Number 9XXX-XX-1X

Model Number
9104

Coil Voltage
05 = 5 volts 12 = 12 volts

Magnetic Shield
1 = External Magnetic Shield

General Options
0 = No Diode
1 = Diode [2]

9104 Series / Hi Voltage SIP Reed Relays

NEW!

Model Number			9104 [2]	
Parameters	**Test Conditions**	**Units**	**4 Pin SIP**	
COIL SPECS.				
Nom. Coil Voltage		VDC	5	12
Max. Coil Voltage		VDC	6.5	15.0
Coil Resistance	+/- 10%, 25° C	Ω	175	500
Operate Voltage	Must Operate by	VDC - Max.	3.75	9.0
Release Voltage	Must Release by	VDC - Min.	0.5	1.0
CONTACT RATINGS				
Switching Voltage[4]	Max DC/Peak AC Resist.	Volts	1000	
Switching Current	Max DC/Peak AC Resist.	Amps	0.5	
Carry Current	Max DC/Peak AC Resist.	Amps	1.3	
Contact Rating	Max DC/Peak AC Resist.	Watts	10	
Life Expectancy-Typical[1]	Signal Level 1.0V, 10.0mA	x 10^6 Ops.	300	
Static Contact Resistance (max. init.)	50mV, 10mA	Ω	0.150	
Dynamic Contact Resistance (max. init.)	0.5V, 50mA at 100 Hz, 1.5 msec	Ω	0.200	
RELAY SPECIFICATIONS				
Insulation Resistance (minimum)	Between all Isolated Pins at 100V, 25°C, 40% RH	Ω	10^{11}	
Capacitance - Typical Across Open Contacts	No Shield	pF	1.0	
Open Contact to Coil	No Shield	pF	-	
Dielectric Strength (minimum)	Between Contacts	VDC/peak AC	2000	
	Contacts to Shield	VDC/peak AC	3000	
	Contacts/Shield to Coil	VDC/peak AC	3000	
Operate Time - including bounce - Typical	At Nominal Coil Voltage, 30 Hz Square Wave	msec.	0.75	
Release Time - Typical	Zener-Diode Suppression[3]	msec.	0.5	

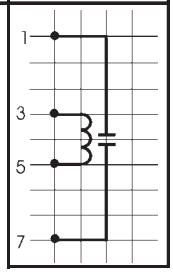

Top View:
Dot stamped on relay refers to pin #1
Grid = .1"x.1"
(2.54mm x 2.54mm)

Notes:

[1]Consult factory for life expectancy at other switching loads.

[2]Optional diode is connected to pin #3 (+) and pin #5(-). Correct coil polarity must be observed.

[3]Consists of 56V Zener diode and 1N4148 diode in series, connected in parallel with coil.

[4]Switch current limited to 1.0mA @ 1000V.

Environmental Ratings:

Storage Temp: -35°C to +100°C; Operating Temp: -20°C to +85°C
Solder Temp: 270°C max; 10 sec. max
The operate and release voltage and the coil resistance are specified at 25°C. These values vary by approximately 0.4% / °C as the ambient temperature varies.
Vibration: 20 G's to 2000 Hz; Shock: 50 G's