查询AD7699BCPZRL7供应商 捷多邦，专业PCB打样工厂，24小时加急出货

16-Bit, 8-Channel, 500 kSPS PulSAR ADC

AD7699

FEATURES

- 16-bit resolution with no missing codes
- 8-channel multiplexer with choice of inputs
  - Unipolar single-ended
  - Differential (GND sense)
  - Pseudobipolar
- Throughput: 500 kSPS
- INL: ±0.5 LSB typical, ±1.5 LSB maximum (±23 ppm or FSR)
- Dynamic range: 93.3 dB
- SINAD: 91.5 dB @ 20 kHz
- THD: −97 dB @ 20 kHz
- Analog input range: 0 V to V_{REF} with V_{REF} up to VDD
- Multiple reference types
  - Internal 4.096 V
  - External buffered (up to 4.096 V)
  - External (up to VDD)
- Internal temperature sensor
- Channel sequencer, selectable 1-pole filter, busy indicator
- No pipeline delay, SAR architecture
- Single-supply 5 V operation with
  - 1.8 V to 5 V logic interface
- Serial interface compatible with SPI, MICROWIRE, QSPI, and DSP
- Power dissipation
  - 26 mW @ 500 kSPS
  - 5.2 µW @ 100 SPS
- Standby current: 50 nA
- 20-lead 4 mm × 4 mm LFCSP package

APPLICATIONS

- Battery-powered equipment
- Medical instruments: ECG/EKG
- Mobile communications: GPS
- Personal digital assistants
- Power line monitoring
- Data acquisition
- Seismic data acquisition systems
- Instrumentation
- Process control

FUNCTIONAL BLOCK DIAGRAM

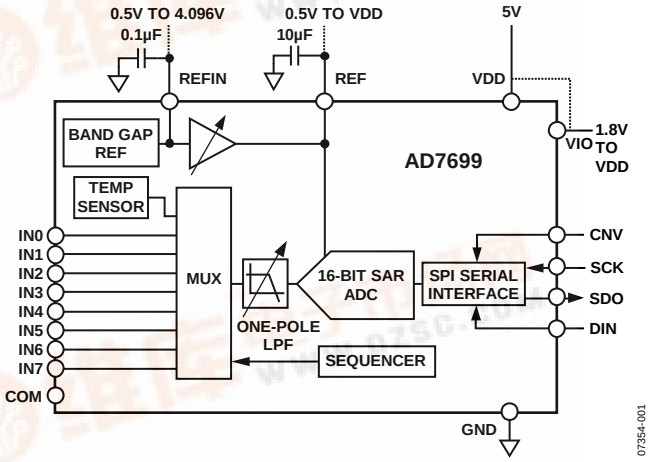

Figure 1.

Table 1. Multichannel 14-/16-Bit PulSAR® ADC

Type	Channels	250 kSPS	500 kSPS	ADC Driver
14-Bit	8	AD7949		ADA4841-x
16-Bit	4	AD7682		ADA4841-x
16-Bit	8	AD7689	AD7699	ADA4841-x

GENERAL DESCRIPTION

The AD7699 is an 8-channel, 16-bit, charge redistribution successive approximation register (SAR) analog-to-digital converter (ADC) that operates from a single power supply, VDD.

The AD7699 contains all components for use in a multichannel, low power data acquisition system, including a true 16-bit SAR ADC with no missing codes; an 8-channel low crosstalk multiplexer useful for configuring the inputs as single-ended (with or without ground sense), differential, or bipolar; an internal 4.096 V low drift reference and buffer; a temperature sensor; a selectable one-pole filter; and a sequencer that is useful when channels are continuously scanned in order.

The AD7699 uses a simple serial port interface (SPI) for writing to the configuration register and receiving conversion results. The SPI interface uses a separate supply, VIO, which is set to the host logic level. Power dissipation scales with throughput.

The AD7699 is housed in a tiny 20-lead LFCSP with operation specified from −40°C to +85°C.

Rev. 0

Information furnished by Analog Devices is believed to be accurate and reliable. However, no responsibility is assumed by Analog Devices for its use, nor for any infringements of patents or other rights of third parties that may result from its use. Specifications subject to change without notice. No license is granted by implication or otherwise under any patent or patent rights of Analog Devices.

One Technology Way, P.O. Box 9106, Norwood, MA 02062-9106, U.S.A.
Tel: 781.329.4700 www.analog.com

TABLE OF CONTENTS

Features ... 1
Applications ... 1
Functional Block Diagram ... 1
General Description ... 1
Revision History ... 2
Specifications ... 3
Timing Specifications ... 5
Absolute Maximum Ratings ... 6
ESD Caution ... 6
Pin Configuration and Function Descriptions ... 7
Typical Performance Characteristics ... 8
Terminology ... 12
Theory of Operation ... 13
Overview ... 13
Converter Operation ... 13
Transfer Functions ... 14
Typical Connection Diagrams ... 15
Analog Inputs ... 16
Driver Amplifier Choice ... 18
Voltage Reference Output/Input ... 18
Power Supply ... 19
Supplying the ADC from the Reference ... 19
Digital Interface ... 20
Reading/Writing During Conversion, Fast Hosts ... 20
Reading/Writing During Acquisition, Any Speed Hosts ... 20
Reading/Writing Spanning Conversion, Any Speed Host ... 20
Configuration Register, CFG ... 20
General Timing Without a Busy Indicator ... 22
Read/Write Spanning Conversion Without a Busy Indicator ... 23
General Timing With a Busy Indicator ... 24
Read/Write Spanning Conversion with a Busy Indicator ... 25
Application Hints ... 26
Layout ... 26
Evaluating AD7699 Performance ... 26
Outline Dimensions ... 27
Ordering Guide ... 27

REVISION HISTORY

10/08—Revision 0: Initial Version

SPECIFICATIONS

VDD = 4.5 V to 5.5 V, V_{REF} = 4.096 to VDD, VIO = 1.8 V to VDD, all specifications T_{MIN} to T_{MAX}, unless otherwise noted.

Table 2.

Parameter	Conditions/Comments	Min	Typ	Max	Unit
RESOLUTION		16			Bits
ANALOG INPUT					
Voltage Range	Unipolar mode	0		$+V_{REF}$	V
	Bipolar mode	$-V_{REF}/2$		$+V_{REF}/2$	V
Absolute Input Voltage	Positive input, unipolar and bipolar modes	−0.1		V_{REF} + 0.1	V
	Negative or COM input, unipolar mode	−0.1		+0.1	V
	Negative or COM input, bipolar mode	$V_{REF}/2$ − 0.1	$V_{REF}/2$	$V_{REF}/2$ + 0.1	V
Analog Input CMRR	f_{IN} = 250 kHz		68		dB
Leakage Current at 25°C Input Impedance[1]	Acquisition phase		1		nA
THROUGHPUT					
Conversion Rate					
Full Bandwidth[2]		0		500	kSPS
¼ Bandwidth[2]		0		125	kSPS
Transient Response	Full-scale step, full bandwidth			400	ns
	Full-scale step, ¼ bandwidth			1600	ns
ACCURACY					
No Missing Codes		16			Bits
Integral Linearity Error		−1.5	±0.5	+1.5	LSB[3]
Differential Linearity Error		−1	±0.25	+1.5	LSB
Transition Noise	REF = VDD = 5 V		0.5		LSB
Gain Error[4]	All modes	−10	±1	+10	LSB
Gain Error Match		−3	±1	+3	LSB
Gain Error Temperature Drift			±0.3		ppm/°C
Offset Error[4]	All modes	−10	±1	+10	LSB
Offset Error Match		−3	±1	+3	LSB
Offset Error Temperature Drift			±0.3		ppm/°C
Power Supply Sensitivity	VDD = 5 V ± 5%		±1.5		LSB
AC Accuracy					
Dynamic Range			93.3		dB[5]
Signal-to-Noise	f_{IN} = 20 kHz, VREF = 5 V	92	92.5		dB
	f_{IN} = 20 kHz, VREF = 4.096 V internal REF	89.5	91.5		dB
SINAD	f_{IN} = 20 kHz, VREF = 5 V	90	91.5		dB
	f_{IN} = 20 kHz, VREF = 5 V, −60 dB input		33.5		dB
	f_{IN} = 20 kHz, VREF = 4.096 V internal REF	89	90.5		dB
Total Harmonic Distortion	f_{IN} = 20 kHz		−97		dB
Spurious-Free Dynamic Range	f_{IN} = 20 kHz		112		dB
Channel-to-Channel Crosstalk	f_{IN} = 100 kHz on adjacent channel(s)		−125		dB
SAMPLING DYNAMICS					
−3 dB Input Bandwidth	Full bandwidth		14		MHz
	¼ bandwidth		3.6		MHz
Aperture Delay	VDD = 5 V		2.5		ns

Parameter	Conditions/Comments	Min	Typ	Max	Unit
INTERNAL REFERENCE					
REF Output Voltage	@ 25°C	4.086	4.096	4.106	V
REFIN Output Voltage[6]	@ 25°C		2.3		V
REF Output Current			±300		µA
Temperature Drift			±10		ppm/°C
Line Regulation	VDD = 5 V ± 5%		±15		ppm/V
Long-Term Drift	1000 hours		50		ppm
Turn-On Settling Time	CREF = 10 µF		5		ms
EXTERNAL REFERENCE					
Voltage Range	REF input	0.5		VDD + 0.3	V
	REFIN input (buffered)	0.5		VDD − 0.2	V
Current Drain	500 kSPS, REF = 5 V		100		µA
TEMPERATURE SENSOR					
Output Voltage[7]	@ 25°C		283		mV
Temperature Sensitivity			1		mV/°C
DIGITAL INPUTS					
Logic Levels					
V_{IL}		−0.3		+0.3 × VIO	V
V_{IH}		0.7 × VIO		VIO + 0.3	V
I_{IL}		−1		+1	µA
I_{IH}		−1		+1	µA
DIGITAL OUTPUTS					
Data Format[8]					
Pipeline Delay[9]					
V_{OL}	I_{SINK} = +500 µA			0.4	V
V_{OH}	I_{SOURCE} = −500 µA	VIO − 0.3			V
POWER SUPPLIES					
VDD	Specified performance	4.5		5.5	V
VIO	Specified performance	1.8		VDD + 0.3	V
Standby Current[10, 11]	VDD and VIO = 5 V, @ 25°C		50		nA
Power Dissipation	VDD = 5 V, 100 kSPS throughput		5.2		µW
	VDD = 5 V, 500 kSPS throughput		26	29	mW
	VDD = 5 V, 500 kSPS throughput with internal reference		28	32	mW
Energy per Conversion			52		nJ
TEMPERATURE RANGE[12]					
Specified Performance	T_{MIN} to T_{MAX}	−40		+85	°C

[1] See the Analog Inputs section.
[2] The bandwidth is set with the configuration register.
[3] LSB means least significant bit. With the 5 V input range, one LSB = 76.3 µV.
[4] See the Terminology section. These specifications include full temperature range variation but not the error contribution from the reference.
[5] All specifications expressed in decibels are referred to a full-scale input FSR and tested with an input signal at 0.5 dB below full scale, unless otherwise specified.
[6] This is the output from the internal band gap.
[7] The output voltage is internal and present on a dedicated multiplexer input.
[8] Unipolar mode: serial 16-bit straight binary.
Bipolar mode: serial 16-bit twos complement.
[9] Conversion results available immediately after completed conversion.
[10] With all digital inputs forced to VIO or GND as required.
[11] During acquisition phase.
[12] Contact an Analog Devices, Inc., sales representative for the extended temperature range.

TIMING SPECIFICATIONS

VDD = 4.5 V to 5.5 V, V_{REF} = 4.096 to VDD, VIO = 1.8 V to VDD, all specifications T_{MIN} to T_{MAX}, unless otherwise noted.

Table 3.

Parameter[1]	Symbol	Min	Typ	Max	Unit
Conversion Time: CNV Rising Edge to Data Available	t_{CONV}			1.6	µs
Acquisition Time	t_{ACQ}	400			ns
Time Between Conversions	t_{CYC}	2			µs
CNV Pulse Width	t_{CNVH}	10			ns
Data Write/Read During Conversion	t_{DATA}			1.2	µs
SCK Period	t_{SCK}	t_{DSDO} + 2			ns
SCK Low Time	t_{SCKL}	11			ns
SCK High Time	t_{SCKH}	11			ns
SCK Falling Edge to Data Remains Valid	t_{HSDO}	4			ns
SCK Falling Edge to Data Valid Delay	t_{DSDO}				
VIO Above 4.5 V				16	ns
VIO Above 3 V				17	ns
VIO Above 2.7 V				18	ns
VIO Above 2.3 V				21	ns
VIO Above 1.8 V				28	ns
CNV Low to SDO D15 MSB Valid	t_{EN}				
VIO Above 4.5 V				15	ns
VIO Above 3 V				17	ns
VIO Above 2.7 V				18	ns
VIO Above 2.3 V				22	ns
VIO Above 1.8 V				25	ns
CNV High or Last SCK Falling Edge to SDO High Impedance	t_{DIS}			32	ns
CNV Low to SCK Rising Edge	t_{CLSCK}	10			ns
DIN Valid Setup Time from SCK Falling Edge	t_{SDIN}	5			ns
DIN Valid Hold Time from SCK Falling Edge	t_{HDIN}	5			ns

[1] See Figure 2 and Figure 3 for load conditions.

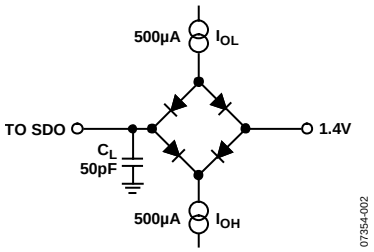

Figure 2. Load Circuit for Digital Interface Timing

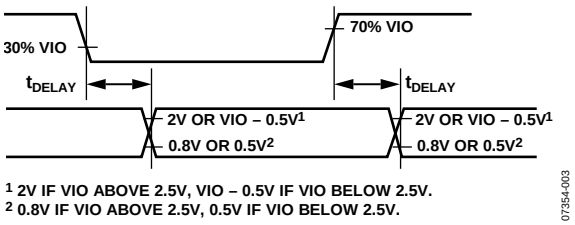

Figure 3. Voltage Levels for Timing

ABSOLUTE MAXIMUM RATINGS

Table 4.

Parameter	Rating
Analog Inputs	
INx,[1] COM[1]	GND − 0.3 V to VDD + 0.3 V or VDD ± 130 mA
REF, REFIN	GND − 0.3 V to VDD + 0.3 V
Supply Voltages	
VDD, VIO to GND	−0.3 V to +7 V
VDD to VIO	±7 V
DIN, CNV, SCK to GND	−0.3 V to VIO + 0.3 V
SDO to GND	−0.3 V to VIO + 0.3 V
Storage Temperature Range	−65°C to +150°C
Junction Temperature	150°C
θ_{JA} Thermal Impedance (LFCSP)	47.6°C/W
θ_{JC} Thermal Impedance (LFCSP)	4.4°C/W

[1] See the Analog Inputs section.

Stresses above those listed under Absolute Maximum Ratings may cause permanent damage to the device. This is a stress rating only; functional operation of the device at these or any other conditions above those indicated in the operational section of this specification is not implied. Exposure to absolute maximum rating conditions for extended periods may affect device reliability.

ESD CAUTION

ESD (electrostatic discharge) sensitive device. Charged devices and circuit boards can discharge without detection. Although this product features patented or proprietary protection circuitry, damage may occur on devices subjected to high energy ESD. Therefore, proper ESD precautions should be taken to avoid performance degradation or loss of functionality.

PIN CONFIGURATION AND FUNCTION DESCRIPTIONS

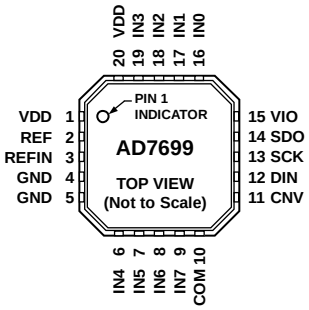

NOTES
1. THE EXPOSED PADDLE IS NOT CONNECTED INTERNALLY. FOR INCREASED RELIABILITY OF THE SOLDER JOINTS, IT IS RECOMMENDED THAT THE PAD BE SOLDERED TO THE GND PLANE.

07354-004

Figure 4. Pin Configuration

Table 5. Pin Function Descriptions

Pin No.	Mnemonic	Type[1]	Description
1, 20	VDD	P	Power Supply. Nominally 4.5 to 5.5 V and should be decoupled with 10 µF and 100 nF capacitors.
2	REF	AI/O	Reference Input/Output. See the Voltage Reference Output/Input section. When the internal reference is enabled, this pin produces 4.096 V. When the internal reference is disabled and the buffer is enabled, REF produces a buffered version of the voltage present on the REFIN pin (VDD – 0.5 V maximum) useful when using low cost, low power references. For improved drift performance, connect a precision reference to REF (0.5 V to VDD). For any reference method, this pin needs decoupling with an external 10 µF capacitor connected as close to REF as possible. See the Reference Decoupling section.
3	REFIN	AI/O	Internal Reference Output/Reference Buffer Input. See the Voltage Reference Output/Input section. When using the internal reference, the internal unbuffered reference voltage is present and needs decoupling with a 0.1 µF capacitor. When using the internal reference buffer, apply a source between 0.5 V and 4.096 V that is buffered to the REF pin as previously described.
4, 5	GND	P	Power Supply Ground.
6 to 9	IN4 to IN7	AI	Analog Input Channel 4, Analog Input Channel 5, Analog Input Channel 6, and Analog Input Channel 7.
10	COM	AI	Common Channel Input. All input channels, IN[7:0], can be referenced to a common-mode point of 0 V or $V_{REF}/2$ V.
11	CNV	DI	Conversion Input. On the rising edge, CNV initiates the conversion. During conversion, if CNV is held high, the busy indictor is enabled.
12	DIN	DI	Data Input. This input is used for writing to the 14-bit configuration register. The configuration register can be written to during and after conversion.
13	SCK	DI	Serial Data Clock Input. This input is used to clock out the data on SDO and clock in data on DIN in an MSB first fashion.
14	SDO	DO	Serial Data Output. The conversion result is output on this pin and synchronized to SCK. In unipolar modes, conversion results are straight binary; in bipolar modes, conversion results are twos complement.
15	VIO	P	Input/Output Interface Digital Power. Nominally at the same supply as the host interface (1.8 V, 2.5 V, 3 V, or 5 V).
16 to 19	IN0 to IN3	AI	Analog Input Channel 0, Analog Input Channel 1, Analog Input Channel 2, and Analog Input Channel 3.
21 (EPAD)	Exposed Paddle (EPAD)		The exposed paddle is not connected internally. For increased reliability of the solder joints, it is recommended that the pad be soldered to the GND plane.

[1]AI = analog input, AI/O = analog input/output, DI = digital input, DO = digital output, and P = power.

TYPICAL PERFORMANCE CHARACTERISTICS

VDD = 5V, VREF = 5V, VIO = VDD, unless otherwise noted

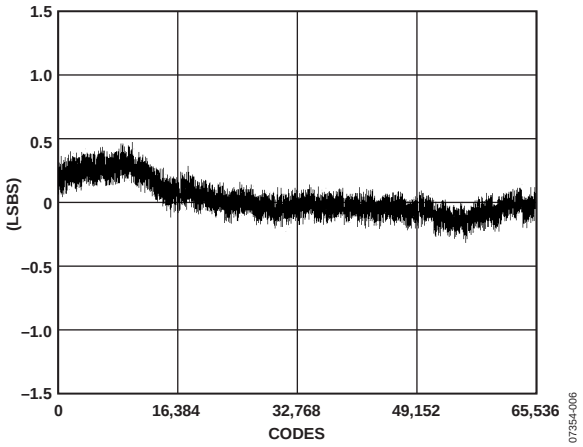

Figure 5. Integral Nonlinearity vs. Code

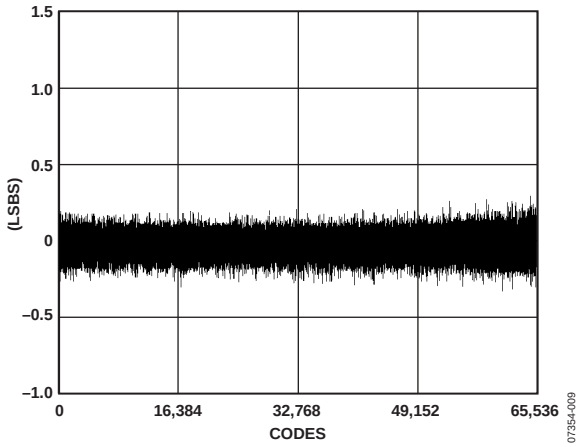

Figure 8. Differential Nonlinearity vs. Code

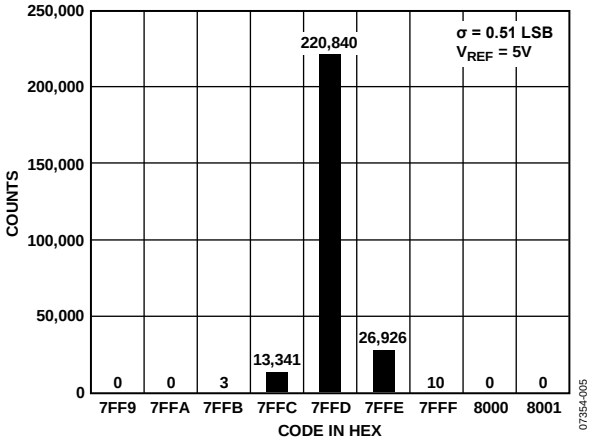

Figure 6. Histogram of a DC Input at Code Center

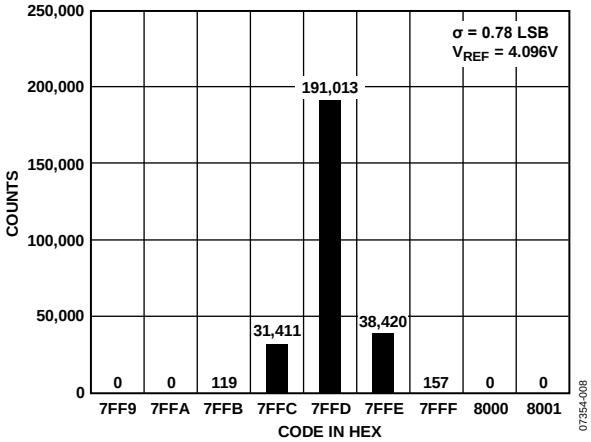

Figure 9. Histogram of a DC Input at Code Center

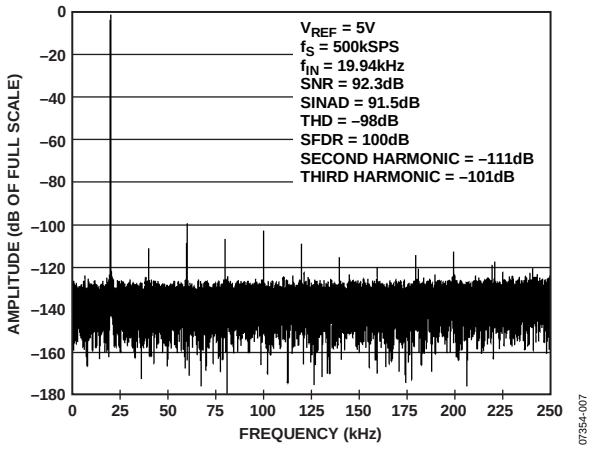

Figure 7. 20 kHz FFT, VREF = 5 V

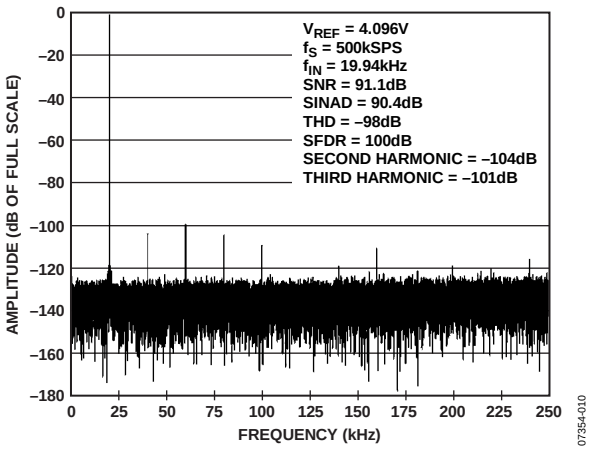

Figure 10. 20 kHz FFT, VREF = 4.096 V

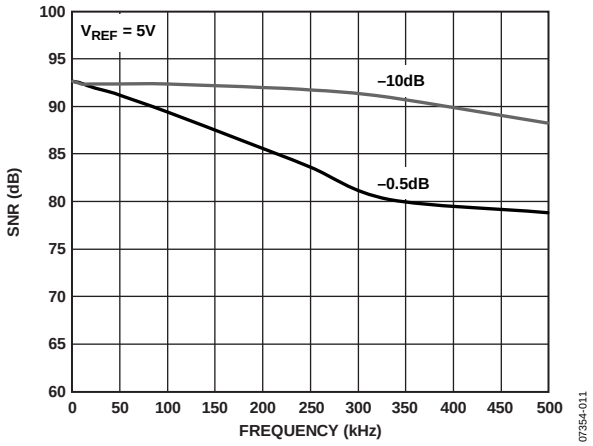

Figure 11. SNR vs. Frequency

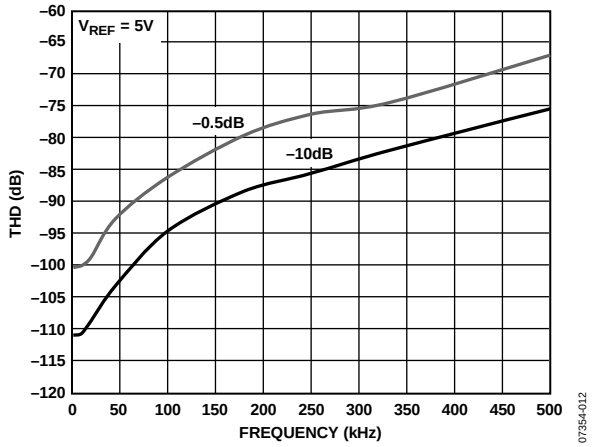

Figure 12. THD vs. Frequency

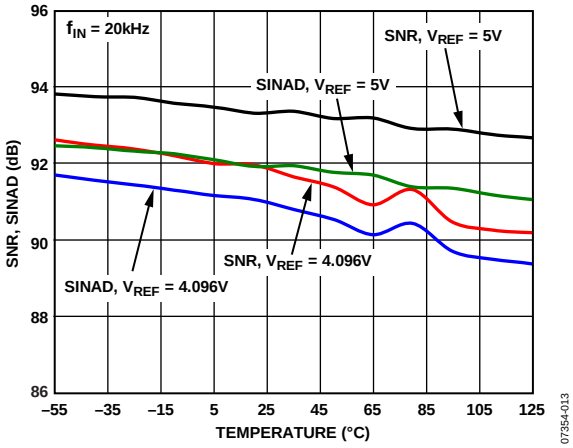

Figure 13. SNR, SINAD vs.Temperature

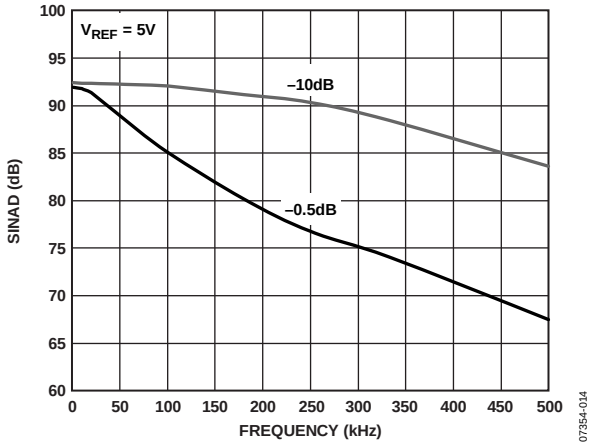

Figure 14. SINAD vs. Frequency

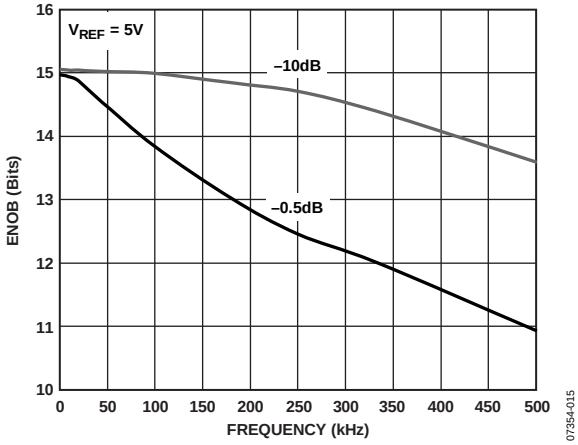

Figure 15. ENOB vs. Frequency

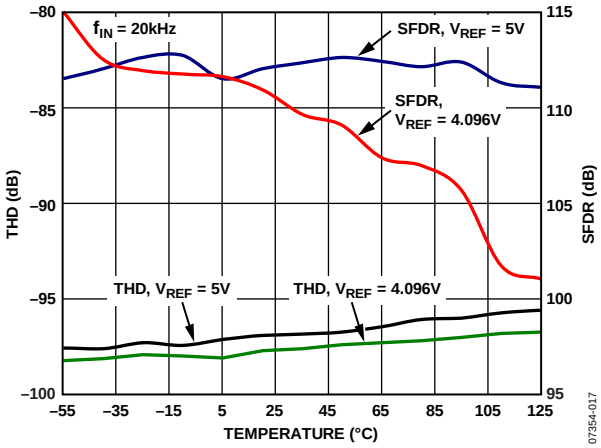

Figure 16. THD, SFDR vs. Temperature

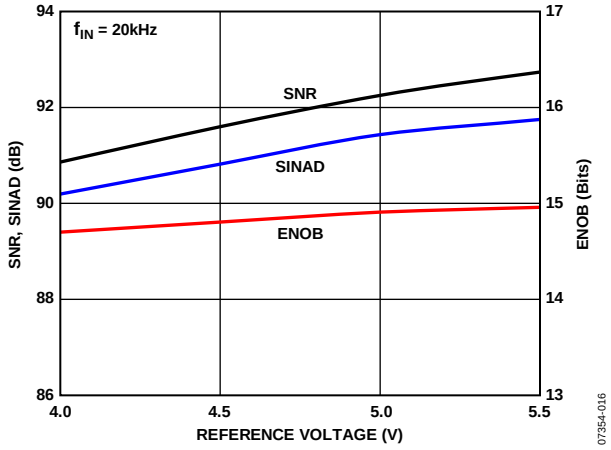

Figure 17. SNR, SINAD, ENOB vs. Reference Voltage

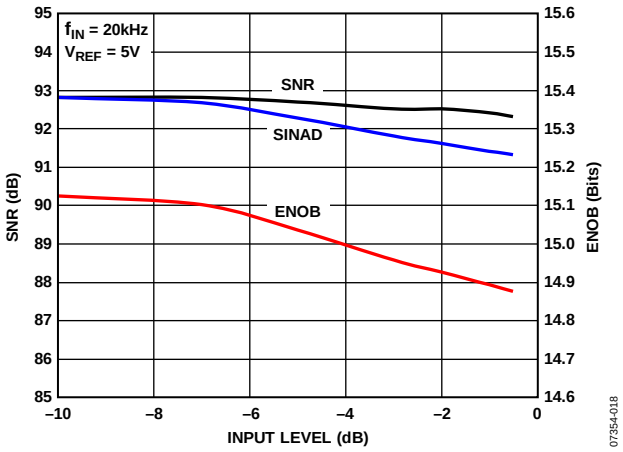

Figure 18. SNR, SINAD, and ENOB vs. Input Level

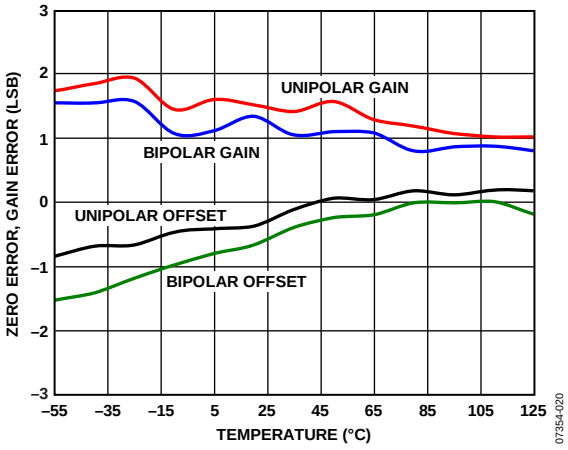

Figure 19. Offset and Gain Errors vs. Temperature, Not Normalized

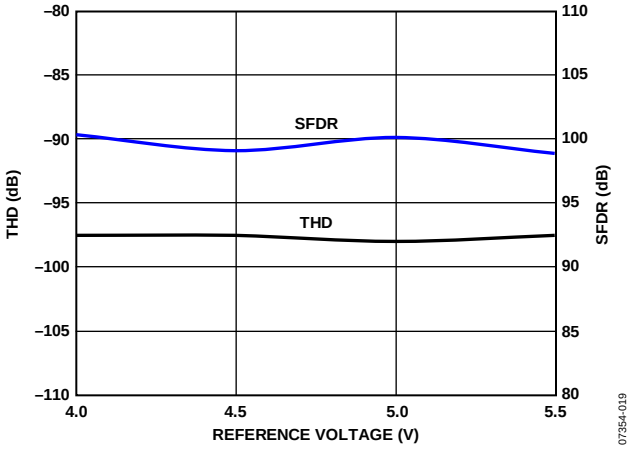

Figure 20. THD, SFDR vs. Reference Voltage

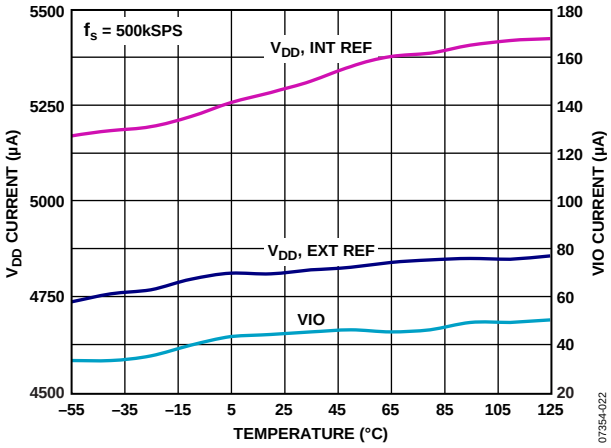

Figure 21. Operating Currents vs. Temperature

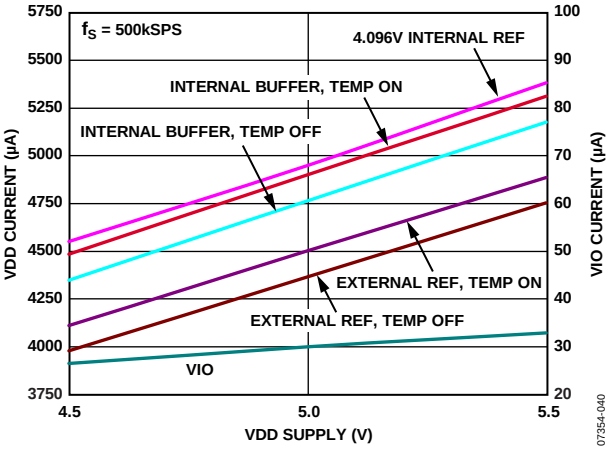

Figure 22. Operating Currents vs. Supply

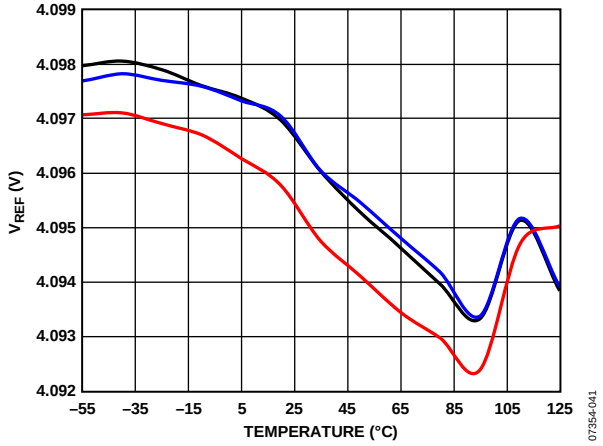

Figure 23. Internal Reference Output Voltage vs. Temperature, Three Devices

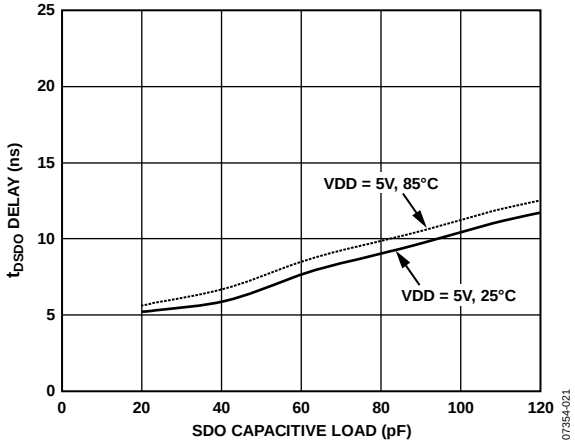

Figure 24. t_{DSDO} Delay vs. SDO Capacitance Load and Supply

TERMINOLOGY

Least Significant Bit (LSB)
The LSB is the smallest increment that can be represented by a converter. For an analog-to-digital converter with N bits of resolution, the LSB expressed in volts is

$$LSB\ (\mathrm{V}) = \frac{V_{REF}}{2^N}$$

Integral Nonlinearity Error (INL)
INL refers to the deviation of each individual code from a line drawn from negative full scale through positive full scale. The point used as negative full scale occurs ½ LSB before the first code transition. Positive full scale is defined as a level 1½ LSB beyond the last code transition. The deviation is measured from the middle of each code to the true straight line (see Figure 26).

Differential Nonlinearity Error (DNL)
In an ideal ADC, code transitions are 1 LSB apart. DNL is the maximum deviation from this ideal value. It is often specified in terms of resolution for which no missing codes are guaranteed.

Offset Error

For unipolar mode, the first transition should occur at a level ½ LSB above analog ground. The unipolar offset error is the deviation of the actual transition from that point. For bipolar mode, the first transition should occur at a level ½ LSB above $V_{REF}/2$. The bipolar offset error is the deviation of the actual transition from that point.

Gain Error

The last transition (from 111 … 10 to 111 … 11) should occur for an analog voltage 1½ LSB below the nominal full scale. The gain error is the deviation in LSB (or percentage of full-scale range) of the actual level of the last transition from the ideal level after the offset error is adjusted out. Closely related is the full-scale error (also in LSB or percentage of full-scale range), which includes the effects of the offset error.

Aperture Delay
Aperture delay is the measure of the acquisition performance. It is the time between the rising edge of the CNV input and the point at which the input signal is held for a conversion.

Transient Response
Transient response is the time required for the ADC to accurately acquire its input after a full-scale step function is applied.

Dynamic Range
Dynamic range is the ratio of the rms value of the full scale to the total rms noise measured with the inputs shorted together. The value for dynamic range is expressed in decibels.

Signal-to-Noise Ratio (SNR)
SNR is the ratio of the rms value of the actual input signal to the rms sum of all other spectral components below the Nyquist frequency, excluding harmonics and dc. The value for SNR is expressed in decibels.

Signal-to-(Noise + Distortion) Ratio (SINAD)
SINAD is the ratio of the rms value of the actual input signal to the rms sum of all other spectral components below the Nyquist frequency, including harmonics but excluding dc. The value for SINAD is expressed in decibels.

Total Harmonic Distortion (THD)
THD is the ratio of the rms sum of the first five harmonic components to the rms value of a full-scale input signal and is expressed in decibels.

Spurious-Free Dynamic Range (SFDR)
SFDR is the difference, in decibels, between the rms amplitude of the input signal and the peak spurious signal.

Effective Number of Bits (ENOB)
ENOB is a measurement of the resolution with a sine wave input. It is related to SINAD by the formula

$$ENOB = (SINAD_{\mathrm{dB}} - 1.76)/6.02$$

and is expressed in bits.

Channel-to-Channel Crosstalk
Channel-to-channel crosstalk is a measure of the level of crosstalk between any two adjacent channels. It is measured by applying a dc to the channel under test and applying a full-scale, 100 kHz sine wave signal to the adjacent channel(s). The crosstalk is the amount of signal that leaks into the test channel and is expressed in decibels.

Reference Voltage Temperature Coefficient
Reference voltage temperature coefficient is derived from the typical shift of output voltage at 25°C on a sample of parts at the maximum and minimum reference output voltage (V_{REF}) measured at T_{MIN}, T (25°C), and T_{MAX}. It is expressed in ppm/°C as

$$TCV_{REF}(\mathrm{ppm/°C}) = \frac{V_{REF}(Max) - V_{REF}(Min)}{V_{REF}(25°\mathrm{C}) \times (T_{MAX} - T_{MIN})} \times 10^6$$

where:
$V_{REF}(Max)$ = maximum V_{REF} at T_{MIN}, T (25°C), or T_{MAX}.
$V_{REF}(Min)$ = minimum V_{REF} at T_{MIN}, T (25°C), or T_{MAX}.
$V_{REF}(25°C)$ = V_{REF} at 25°C.
T_{MAX} = +85°C.
T_{MIN} = −40°C.

THEORY OF OPERATION

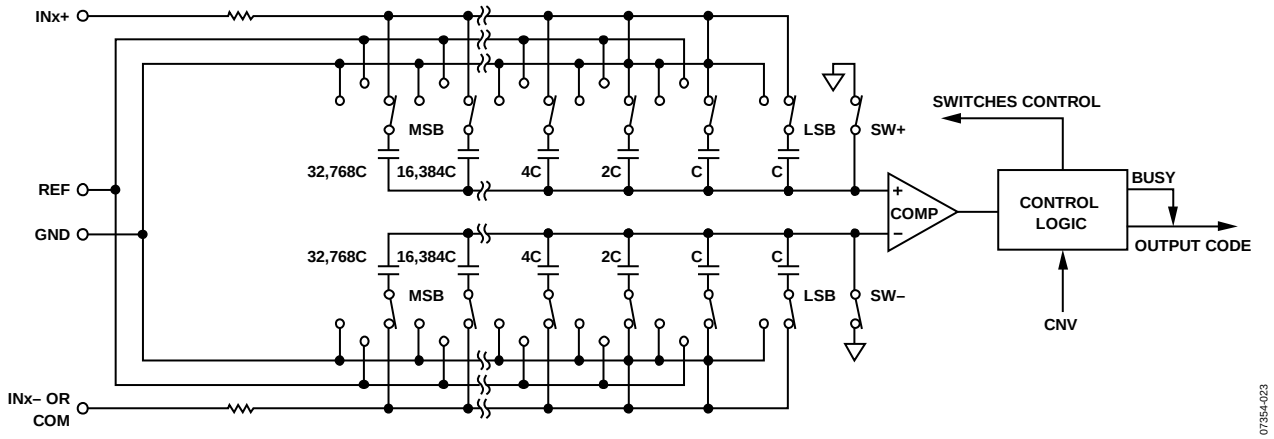

Figure 25. ADC Simplified Schematic

OVERVIEW

The AD7699 is an 8-channel, 16-bit, charge redistribution successive approximation register (SAR) analog-to-digital converter (ADC). It is capable of converting 500,000 samples per second (500 kSPS) and power down between conversions. For example, when operating with an external reference at 1 kSPS, it consumes 52 µW typically, ideal for battery-powered applications.

The AD7699 contains all of the components for use in a multichannel, low power data acquisition system, including

- 16-bit SAR ADC with no missing codes
- 8-channel, low crosstalk multiplexer
- Internal low drift reference and buffer
- Temperature sensor
- Selectable one-pole filter
- Channel sequencer

These components are configured through an SPI-compatible, 14-bit register. Conversion results, also SPI compatible, can be read after or during conversions with the option for reading back the configuration.

The AD7699 provides the user with an on-chip track-and-hold and does not exhibit pipeline delay or latency.

The AD7699 is specified from 4.5 V to 5.5 V and can be interfaced to any 1.8 V to 5 V digital logic family. It is housed in a 20-lead, 4 mm × 4 mm LFCSP that combines space savings and allows flexible configurations and is also pin-for-pin compatible with the 16-bit AD7682 and AD7689, and the 14-bit AD7949.

CONVERTER OPERATION

The AD7699 is a successive approximation ADC based on a charge redistribution DAC. Figure 25 shows the simplified schematic of the ADC. The capacitive DAC consists of two identical arrays of 16 binary-weighted capacitors, which are connected to the two comparator inputs.

During the acquisition phase, terminals of the array tied to the comparator input are connected to GND via SW+ and SW−. All independent switches are connected to the analog inputs.

Thus, the capacitor arrays are used as sampling capacitors and acquire the analog signal on the INx+ and INx− (or COM) inputs. When the acquisition phase is complete and the CNV input goes high, a conversion phase is initiated. When the conversion phase begins, SW+ and SW− are opened first. The two capacitor arrays are then disconnected from the inputs and connected to the GND input. Therefore, the differential voltage between the INx+ and INx− (or COM) inputs captured at the end of the acquisition phase is applied to the comparator inputs, causing the comparator to become unbalanced. By switching each element of the capacitor array between GND and REF, the comparator input varies by binary-weighted voltage steps ($V_{REF}/2$, $V_{REF}/4$, ... $V_{REF}/32{,}768$). The control logic toggles these switches, starting with the MSB, to bring the comparator back into a balanced condition. After the completion of this process, the part returns to the acquisition phase, and the control logic generates the ADC output code and a busy signal indicator.

Because the AD7699 has an on-board conversion clock, the serial clock, SCK, is not required for the conversion process.

TRANSFER FUNCTIONS

With the inputs configured for unipolar range (single ended, COM with ground sense, or paired differentially with INx− as ground sense), the data output is straight binary.

With the inputs configured for bipolar range (COM = $V_{REF}/2$ or paired differentially with INx− = $V_{REF}/2$), the data outputs are twos complement.

The ideal transfer characteristic for the AD7699 is shown in Figure 26 and for both unipolar and bipolar ranges with the internal 4.096 V reference.

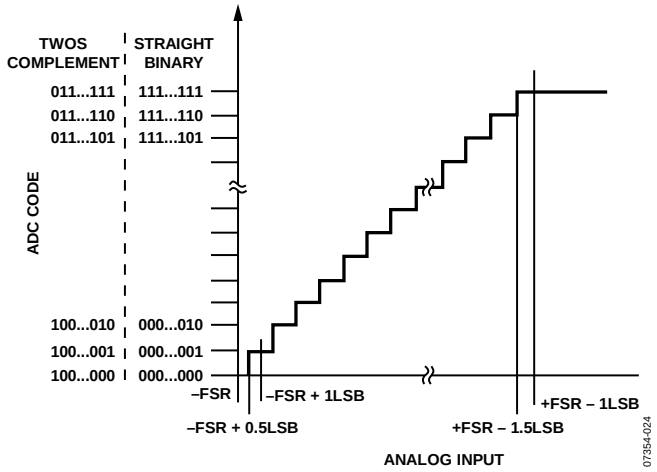

Figure 26. ADC Ideal Transfer Function

Table 6. Output Codes and Ideal Input Voltages

Description	Unipolar Analog Input[1] V_{REF} = 4.096 V	Digital Output Code (Straight Binary Hex)	Bipolar Analog Input[2] V_{REF} = 4.096 V	Digital Output Code (Twos Complement Hex)
FSR − 1 LSB	4.095938 V	0xFFFF[3]	2.047938 V	0x7FFF[3]
Midscale + 1 LSB	2.048063 V	0x8001	62.5 µV	0x0001
Midscale	2.048 V	0x8000	0 V	0x0000
Midscale − 1 LSB	2.047938 V	0x7FFF	−62.5 µV	0xFFFF[4]
−FSR + 1 LSB	62.5 µV	0x0001	−2.047938 V	0x8001
−FSR	0 V	0x0000[3]	−2.048 V	0x8000

[1] With COM or INx− = 0 V or all INx referenced to GND.
[2] With COM or INx− = $V_{REF}/2$.
[3] This is also the code for an overranged analog input ((INx+) − (INx−), or COM, above $V_{REF} - V_{GND}$).
[4] This is also the code for an underranged analog input ((INx+) − (INx−), or COM, below V_{GND}).

TYPICAL CONNECTION DIAGRAMS

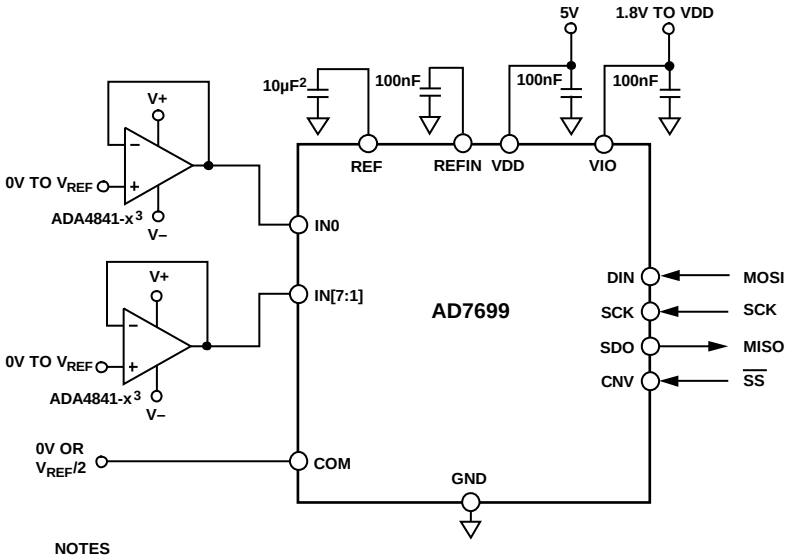

NOTES
1. INTERNAL REFERENCE SHOWN. SEE THE VOLTAGE REFERENCE OUTPUT/INPUT SECTION FOR REFERENCE SELECTION.
2. C_{REF} IS USUALLY A 10µF CERAMIC CAPACITOR (X5R).
3. SEE THE DRIVER AMPLIFIER CHOICE SECTION FOR ADDITIONAL RECOMMENDED AMPLIFIERS.
4. SEE THE DIGITAL INTERFACE SECTION FOR CONFIGURING AND READING CONVERSION DATA.

07354-025

Figure 27. Typical Application Diagram with Multiple Supplies

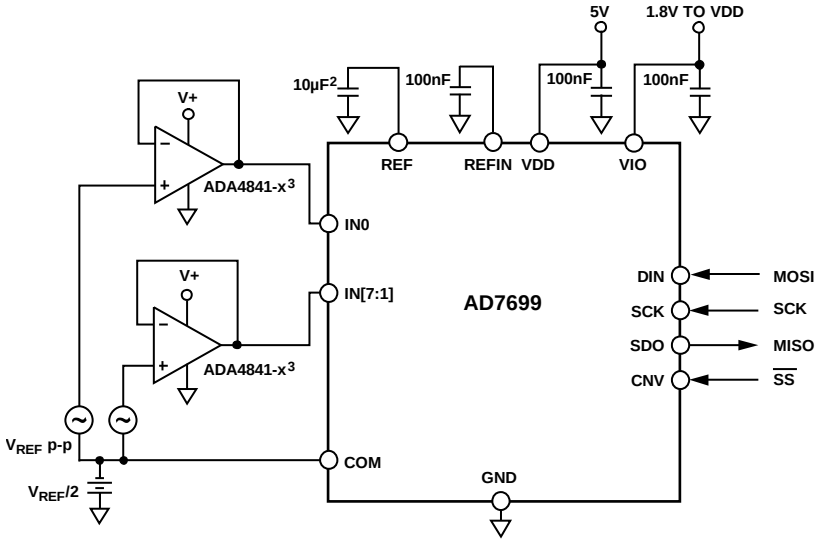

NOTES
1. INTERNAL REFERENCE SHOWN. SEE THE VOLTAGE REFERENCE OUTPUT/INPUT SECTION FOR REFERENCE SELECTION.
2. C_{REF} IS USUALLY A 10µF CERAMIC CAPACITOR (X5R).
3. SEE THE DRIVER AMPLIFIER CHOICE SECTION FOR ADDITIONAL RECOMMENDED AMPLIFIERS.
4. SEE THE DIGITAL INTERFACE SECTION FOR CONFIGURING AND READING CONVERSION DATA.

07354-026

Figure 28. Typical Application Diagram Using Bipolar Input

Unipolar or Bipolar

Figure 27 shows an example of the recommended connection diagram for the AD7699 when multiple supplies are available.

Bipolar Single Supply

Figure 28 shows an example of a system with a bipolar input using single supplies with the internal reference (optional different VIO supply). This circuit is also useful when the amplifier/signal conditioning circuit is remotely located with some common mode present. Note that for any input configuration, the inputs, INx, are unipolar and always referenced to GND (no negative voltages even in bipolar range).

For this circuit, a rail-to-rail input/output amplifier can be used; however, the offset voltage vs. input common-mode range should be noted and taken into consideration (1 LSB = 62.5 μV with V_{REF} = 4.096 V). Note that the conversion results are in twos complement format when using the bipolar input configuration. Refer to the AN-581 Application Note, *Biasing and Decoupling Op Amps in Single Supply Applications*, at www.analog.com for additional details about using single-supply amplifiers.

ANALOG INPUTS

Input Structure

Figure 29 shows an equivalent circuit of the input structure of the AD7699. The two diodes, D1 and D2, provide ESD protection for the analog inputs, IN[7:0] and COM. Care must be taken to ensure that the analog input signal does not exceed the supply rails by more than 0.3 V because this causes the diodes to become forward-biased and to start conducting current.

These diodes can handle a forward-biased current of 130 mA maximum. For instance, these conditions may eventually occur when the input buffer supplies are different from VDD. In such a case, for example, an input buffer with a short circuit, the current limitation can be used to protect the part.

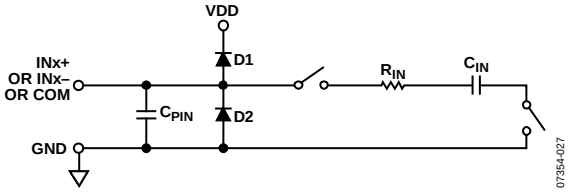

Figure 29. Equivalent Analog Input Circuit

This analog input structure allows the sampling of the true differential signal between INx+ and COM or INx+ and INx–. (COM or INx– = GND ± 0.1 V or V_{REF} ± 0.1 V). By using these differential inputs, signals common to both inputs are rejected, as shown in Figure 30.

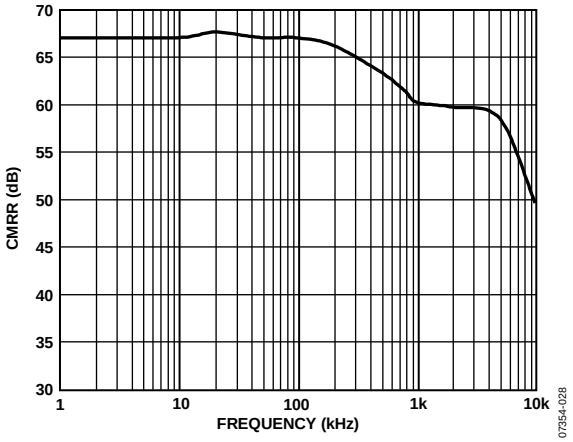

Figure 30. Analog Input CMRR vs. Frequency

During the acquisition phase, the impedance of the analog inputs can be modeled as a parallel combination of the capacitor, C_{PIN}, and the network formed by the series connection of R_{IN} and C_{IN}. C_{PIN} is primarily the pin capacitance. R_{IN} is typically 400 Ω (8.8 kΩ when the one-pole filter is active) and is a lumped component made up of serial resistors and the on resistance of the switches. C_{IN} is typically 27 pF and is mainly the ADC sampling capacitor.

Selectable Low-Pass Filter

During the conversion phase, where the switches are opened, the input impedance is limited to C_{PIN}. While the AD7699 is acquiring, R_{IN} and C_{IN} make a one-pole, low-pass filter that reduces undesirable aliasing effects and limits the noise from the driving circuitry. The low-pass filter can be programmed for the full bandwidth or ¼ of the bandwidth with CFG[6], as shown in Table 8. Note that the converter throughput must also be reduced by ¼ when using the filter. If the maximum throughput is used with the BW set to ¼, the acquisition time of the converter, t_{ACQ}, is violated, resulting in poor THD.

Input Configurations

Figure 31 shows the different methods for configuring the analog inputs with the configuration register (CFG[12:10]). Refer to the Configuration Register, CFG section for more details.

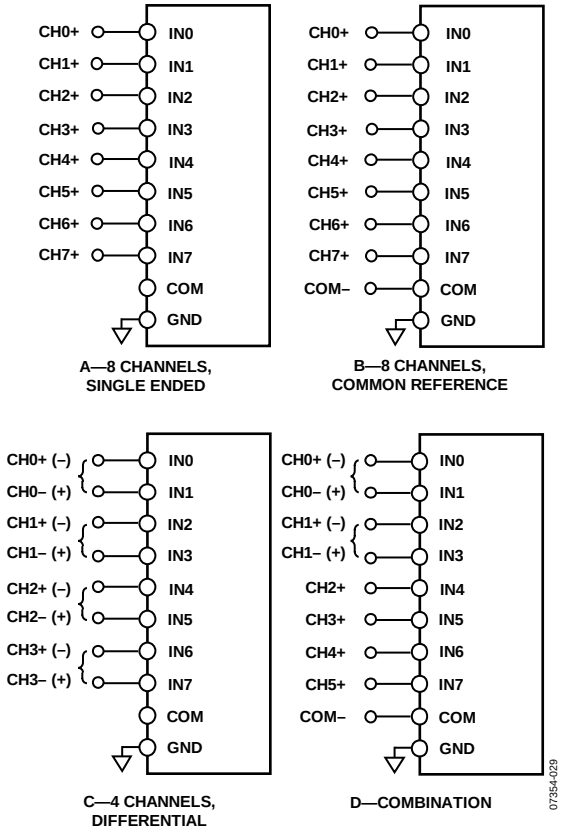

Figure 31. Multiplexed Analog Input Configurations

The analog inputs can be configured as

- Figure 31A, single-ended referenced to system ground; CFG[12:10] = 111_2.
- Figure 31B, bipolar differential with a common reference point; COM = $V_{REF}/2$; CFG[12:10] = 010_2.
  Unipolar differential with COM connected to a ground sense; CFG[12:10] = 110_2.
- Figure 31C, bipolar differential pairs with INx– referenced to $V_{REF}/2$; CFG[12:10] = $00X_2$.
  Unipolar differential pairs with INx– referenced to a ground sense; CFG[12:10] = $10X_2$.
  In this configuration, the INx+ is identified by the channel in CFG[9:7]. For example, for IN0 = IN1+ and IN1 = IN1–, CFG[9:7] = 000_2; for IN1 = IN1+ and IN0 = IN1–, CFG[9:7] = 001_2.
- Figure 31D, inputs configured in any of the above combinations (showing that the AD7699 can be configured dynamically).

Sequencer

The AD7699 includes a channel sequencer useful for scanning channels in a IN0 to IN[7:0] fashion. Channels are scanned as singles or pairs, with or without the temperature sensor, after the last channel is sequenced.

The sequencer starts with IN0 and finishes with IN[7:0] set in CFG[9:7]. For paired channels, the channels are paired depending on the last channel set in CFG[9:7]. Note that the channel pairs are always paired as IN (even) = INx+ and IN (odd) = INx– regardless of CFG[7].

To enable the sequencer, CFG[2:1] are written to for initializing the sequencer. After CFG[13:0] are updated, DIN must be held low while reading data out (at least for Bit 13), or the CFG register begins updating again.

While operating in a sequence, the CFG register can be changed by writing 01_2 to CFG[2:1]. However, if changing CFG11 (paired or single channel) or CFG[9:7] (last channel in sequence), the sequence reinitializes and converts IN0 (or IN1) after CFG is updated.

Examples

Bit[13], Bits[6:3], and Bit 0 are configured for the input and sequencer.

As a first example, scan all IN[7:0] referenced to COM = GND with the temperature sensor.

13	12	11	10	9	8	7	6	5	4	3	2	1	0
CFG	INCC			INx			BW	REF			SEQ		RB
	1	1	0	1	1	1					1	0	

As a second example, scan three paired channels without the temperature sensor and referenced to $V_{REF}/2$.

13	12	11	10	9	8	7	6	5	4	3	2	1	0
CFG	INCC			INx			BW	REF			SEQ		RB
	0	0	X[1]	1	0	X[1]					1	1	

[1] X = don't care.

Source Resistance

When the source impedance of the driving circuit is low, the AD7699 can be driven directly. Large source impedances significantly affect the ac performance, especially total harmonic distortion (THD). The dc performances are less sensitive to the input impedance. The maximum source impedance depends on the amount of THD that can be tolerated. The THD degrades as a function of the source impedance and the maximum input frequency.

DRIVER AMPLIFIER CHOICE

Although the AD7699 is easy to drive, the driver amplifier must meet the following requirements:

- The noise generated by the driver amplifier must be kept as low as possible to preserve the SNR and transition noise performance of the AD7699. Note that the AD7699 has a noise much lower than most of the other 16-bit ADCs and, therefore, can be driven by a noisier amplifier to meet a given system noise specification. The noise from the amplifier is filtered by the AD7699 analog input circuit low-pass filter made by R_{IN} and C_{IN} or by an external filter, if one is used. Because the typical noise of the AD7699 is 35 µV rms (with V_{REF} = 5 V), the SNR degradation due to the amplifier is

$$SNR_{LOSS} = 20\log\left(\frac{35}{\sqrt{35^2 + \frac{\pi}{2} f_{-3dB} (Ne_N)^2}}\right)$$

  where:
  f_{-3dB} is the input bandwidth in megahertz of the AD7699 (14.7 MHz in full BW or 670 kHz in ¼ BW) or the cutoff frequency of an input filter, if one is used.
  N is the noise gain of the amplifier (for example, 1 in buffer configuration).
  e_N is the equivalent input noise voltage of the op amp, in nV/√Hz.
- For ac applications, the driver should have a THD performance commensurate with the AD7699. Figure 12 shows THD vs. frequency for the AD7699.
- For multichannel, multiplexed applications on each input or input pair, the driver amplifier and the AD7699 analog input circuit must settle a full-scale step onto the capacitor array at a 16-bit level (0.0015%). In amplifier data sheets, settling at 0.1% to 0.01% is more commonly specified. This may differ significantly from the settling time at a 16-bit level and should be verified prior to driver selection.

Table 7. Recommended Driver Amplifiers

Amplifier	Typical Application
ADA4841-x	Very low noise, small, and low power
AD8655	5 V single supply, low noise
AD8021	Very low noise and high frequency
AD8022	Low noise and high frequency
OP184	Low power, low noise, and low frequency
AD8605, AD8615	5 V single supply, low power

VOLTAGE REFERENCE OUTPUT/INPUT

The AD7699 allows the choice of a very low temperature drift internal voltage reference, an external reference, or an external buffered reference.

The internal reference of the AD7699 provides excellent performance and can be used in almost all applications. There are five possible choices of voltage reference schemes briefly described in Table 8 with more details in each of the following sections.

Internal Reference/Temperature Sensor

The internal reference can be set for a 4.096 V output as detailed in Table 8. With the internal reference enabled, the band gap voltage is also present on the REFIN pin, which requires an external 0.1 µF capacitor. Because the current output of REFIN is limited, it can be used as a source if followed by a suitable buffer, such as the AD8605.

Enabling the reference also enables the internal temperature sensor, which measures the internal temperature of the AD7699 and is thus useful for performing a system calibration. Note that, when using the temperature sensor, the output is straight binary referenced from the AD7699 GND pin.

The internal reference is temperature-compensated to within 15 mV. The reference is trimmed to provide a typical drift of 3 ppm/°C.

External Reference and Internal Buffer

For improved drift performance, an external reference can be used with the internal buffer. The external reference is connected to REFIN, and the output is produced on the REF pin. An external reference can be used with the internal buffer with or without the temperature sensor enabled. Refer to Table 8 for register details. With the buffer enabled, the gain is unity and is limited to an input/output of 4.096 V.

The internal reference buffer is useful in multiconverter applications because a buffer is typically required in these applications. In addition, a low power reference can be used because the internal buffer provides the necessary performance to drive the SAR architecture of the AD7699.

External Reference

In any of the five voltage reference schemes, an external reference can be connected directly on the REF pin because the output impedance of REF is >5 kΩ. To reduce power consumption, the reference and buffer can be powered down independently or together for the lowest power consumption. However, for applications requiring the use of the temperature sensor, the reference must be active. Refer to Table 8 for register details. For improved drift performance, an external reference such as the ADR43x or ADR44x is recommended.

Reference Decoupling

Whether using an internal or external reference, the AD7699 voltage reference output/input, REF, has a dynamic input impedance and should therefore be driven by a low impedance source with efficient decoupling between the REF and GND pins. This decoupling depends on the choice of the voltage reference but usually consists of a low ESR capacitor connected to REF and GND with minimum parasitic inductance. A 10 µF (X5R, 1206 size) ceramic chip capacitor is appropriate when using the internal reference, the ADR43x/ADR44x external

reference, or a low impedance buffer such as the AD8031 or the AD8605.

The placement of the reference decoupling capacitor is also important to the performance of the AD7699, as explained in the Layout section. Mount the decoupling capacitor on the same side as the ADC at the REF pin with a thick PCB trace. The GND should also connect to the reference decoupling capacitor with the shortest distance and to the analog ground plane with several vias.

If desired, smaller reference decoupling capacitor values down to 2.2 µF can be used with a minimal impact on performance, especially on DNL.

Regardless, there is no need for an additional lower value ceramic decoupling capacitor (for example, 100 nF) between the REF and GND pins.

For applications that use multiple AD7699s or other PulSAR devices, it is more effective to use the internal reference buffer to buffer the external reference voltage, thus reducing SAR conversion crosstalk.

The voltage reference temperature coefficient (TC) directly impacts full scale; therefore, in applications where full-scale accuracy matters, care must be taken with the TC. For instance, a ±15 ppm/°C TC of the reference changes full scale by ±1 LSB/°C.

POWER SUPPLY

The AD7699 uses two power supply pins: an analog and digital core supply (VDD) and a digital input/output interface supply (VIO). VIO allows direct interface with any logic between 1.8 V and VDD. To reduce the supplies needed, the VIO and VDD pins can be tied together. The AD7699 is independent of power supply sequencing between VIO and VDD. The only restriction is that CNV must be low when powering up the AD7699. Additionally, it is very insensitive to power supply variations over a wide frequency range, as shown in Figure 32.

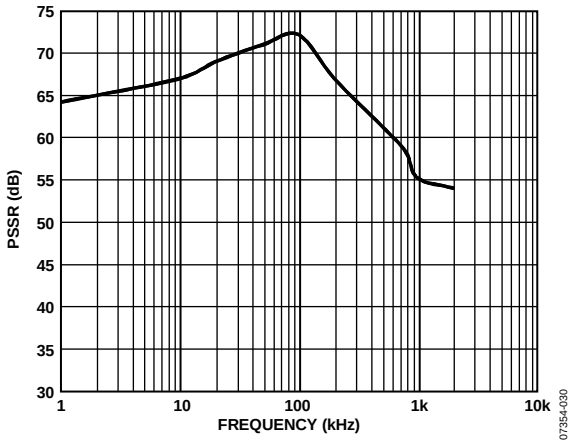

Figure 32. PSRR vs. Frequency

The AD7699 powers down automatically at the end of each conversion phase; therefore, the operating currents and power scale linearly with the sampling rate. This makes the part ideal for low sampling rates (even of a few hertz) and low battery-powered applications.

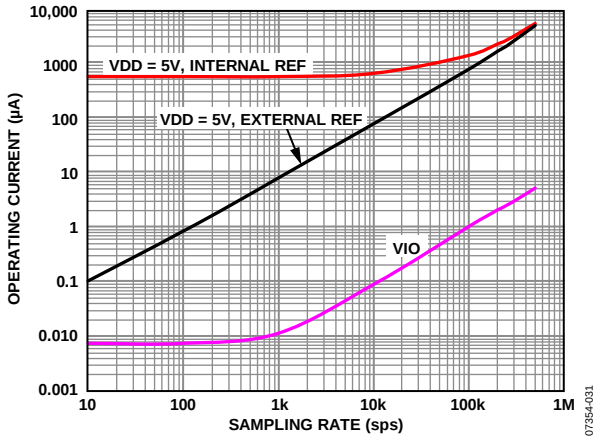

Figure 33. Operating Currents vs. Sampling Rate

SUPPLYING THE ADC FROM THE REFERENCE

For simplified applications, the AD7699, with its low operating current, can be supplied directly using the reference circuit, as shown in Figure 34. The reference line can be driven by

- The system power supply directly
- A reference voltage with enough current output capability, such as the ADR43x/ADR44x
- A reference buffer, such as the AD8605, which can also filter the system power supply, as shown in Figure 34

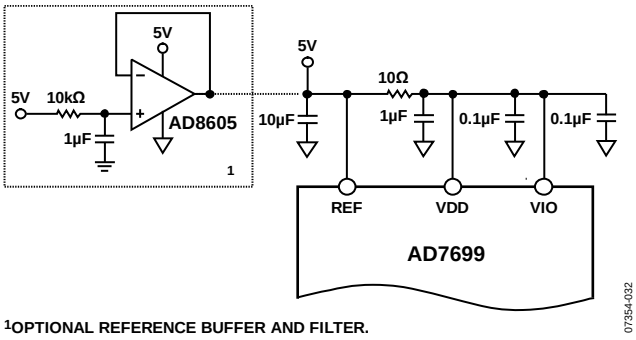

[1]OPTIONAL REFERENCE BUFFER AND FILTER.

Figure 34. Example of an Application Circuit

DIGITAL INTERFACE

The AD7699 uses a simple 4-wire interface and is compatible with SPI, MICROWIRE™, QSPI™, digital hosts, and DSPs, for example, Blackfin® ADSP-BF53x, SHARC®, ADSP-219x, and ADSP-218x.

The interface uses the CNV, DIN, SCK, and SDO signals and allows CNV, which initiates the conversion, to be independent of the readback timing. This is useful in low jitter sampling or simultaneous sampling applications.

A 14-bit register, CFG[13:0], is used to configure the ADC for the channel to be converted, the reference selection, and other components, which are detailed in the Configuration Register, CFG section.

When CNV is low, reading/writing can occur during conversion, acquisition, and spanning conversion (acquisition plus conversion), as detailed in the following sections. The CFG word is updated on the first 14 SCK rising edges, and conversion results are output on the first 15 (or 16 if busy mode is selected) SCK falling edges. If the CFG readback is enabled, an additional 14 SCK falling edges are required to output the CFG word associated with the conversion results, with the CFG MSB following the LSB of the conversion result.

A discontinuous SCK is recommended because the part is selected with CNV low, and SCK activity begins to write a new configuration word and clock out data.

Note that in the following sections, the timing diagrams indicate digital activity (SCK, CNV, DIN, SDO) during the conversion. However, due to the possibility of performance degradation, digital activity should occur only prior to the safe data reading/writing time, t_{DATA}, because the AD7699 provides error correction circuitry that can correct for an incorrect bit during this time. From t_{DATA} to t_{CONV}, there is no error correction and conversion results may be corrupted. The user should configure the AD7699 and initiate the busy indicator (if desired) prior to t_{DATA}. It is also possible to corrupt the sample by having SCK or DIN transitions near the sampling instant. Therefore, it is recommended to keep the digital pins quiet for approximately 30 ns before and 10 ns after the rising edge of CNV, using a discontinuous SCK whenever possible to avoid any potential performance degradation.

READING/WRITING DURING CONVERSION, FAST HOSTS

When reading/writing during conversion (n), conversion results are for the previous (n − 1) conversion, and writing the CFG is for the next (n + 1) acquisition and conversion.

After the CNV is brought high to initiate conversion, it must be brought low again to allow reading/writing during conversion. Reading/writing should only occur up to t_{DATA} and, because this time is limited, the host must use a fast SCK.

The SCK frequency required is calculated by

$$f_{SCK} \geq \frac{Number_SCK_Edges}{t_{DATA}}$$

The time between t_{DATA} and t_{CONV} is a safe time when digital activity should not occur, or sensitive bit decisions may be corrupt.

READING/WRITING DURING ACQUISITION, ANY SPEED HOSTS

When reading/writing after conversion, or during acquisition (n), conversion results are for the previous (n − 1) conversion, and writing is for the (n + 1) acquisition.

For the maximum throughput, the only time restriction is that the reading/writing take place during the t_{ACQ} (min) time. For slow throughputs, the time restriction is dictated by throughput required by the user, and the host is free to run at any speed. Thus for slow hosts, data access must take place during the acquisition phase.

READING/WRITING SPANNING CONVERSION, ANY SPEED HOST

When reading/writing spanning conversion, the data access starts at the current acquisition (n) and spans into the conversion (n). Conversion results are for the previous (n − 1) conversion, and writing the CFG register is for the next (n + 1) acquisition and conversion.

Similar to reading/writing during conversion, reading/writing should only occur up to t_{DATA}. For the maximum throughput, the only time restriction is that reading/writing take place during the t_{ACQ} (min) + t_{DATA} time.

For slow throughputs, the time restriction is dictated by the user's required throughput, and the host is free to run at any speed. Similar to reading/writing during acquisition, for slow hosts, the data access must take place during the acquisition phase with additional time into the conversion.

Note that data access spanning conversion requires the CNV to be driven high to initiate a new conversion, and data access is not allowed when CNV is high. Thus, the host must perform two bursts of data access when using this method.

CONFIGURATION REGISTER, CFG

The AD7699 uses a 14-bit configuration register (CFG[13:0]) as detailed in Table 8 for configuring the inputs, the channel to be converted, one-pole filter bandwidth, the reference, and the channel sequencer. The CFG register is latched (MSB first) on DIN with 14 SCK rising edges. CFG update is edge dependent, allowing for asynchronous or synchronous hosts.

The register can be written to during conversion, during acquisition, or spanning acquisition/conversion and is updated at the end of conversion, t_{CONV} (maximum). There is always a one deep delay when writing the CFG register. Note that at power-up, the CFG register is undefined and two dummy conversions are required to update the register. To preload the CFG register with a factory setting, hold DIN high for two conversions. Thus CFG[13:0] = 0x3FFF. This sets the AD7699 for the following:

- IN[7:0] unipolar referenced to GND, sequenced in order
- Full bandwidth for a one-pole filter
- Internal reference/temperature sensor disabled, buffer enabled
- Enables the sequencer
- No readback of the CFG register

Table 8 summarizes the configuration register bit details. See the Theory of Operation section for more details.

13	12	11	10	9	8	7	6	5	4	3	2	1	0
CFG	INCC	INCC	INCC	INx	INx	INx	BW	REF	REF	REF	SEQ	SEQ	RB

Table 8. Configuration Register Description

Bit(s)	Name	Description			
[13]	CFG	Configuration update. 0 = Keep current configuration settings. 1 = Overwrite contents of register.			
[12:10]	INCC	Input channel configuration. Selection of pseudobipolar, pseudodifferential, pairs, single-ended, or temperature sensor. Refer to the Input Configurations section.			
		Bit 12	**Bit 11**	**Bit 10**	**Function**
		0	0	X[1]	Bipolar differential pairs; INx− referenced to $V_{REF}/2 \pm 0.1$ V.
		0	1	0	Bipolar; INx referenced to COM = $V_{REF}/2 \pm 0.1$ V.
		0	1	1	Temperature sensor.
		1	0	X[1]	Unipolar differential pairs; INx− referenced to GND ± 0.1 V.
		1	1	0	Unipolar, IN0 to IN7 referenced to COM = GND ± 0.1 V (GND sense).
		1	1	1	Unipolar, IN0 to IN7 referenced to GND.
[9:7]	INx	Input channel selection in binary fashion.			
		Bit 9	**Bit 8**	**Bit 7**	**Channel**
		0	0	0	IN0
		0	0	1	IN1
		…	…	…	…
		1	1	1	IN7
[6]	BW	Select bandwidth for low-pass filter. Refer to the Selectable Low-Pass Filter section. 0 = ¼ of BW, uses an additional series resistor to further bandwidth limit the noise. Maximum throughput must also be reduced to ¼. 1 = Full BW.			
[5:3]	REF	Reference/buffer selection. Selection of internal, external, and external buffered references, and enabling of the on-chip temperature sensor. Refer to the Voltage Reference Output/Input section.			
		Bit 5	**Bit 4**	**Bit 3**	**Function**
		0	0	0	Not used
		0	0	1	Internal reference, REF = 4.096 V output.
		0	1	0	External reference, temperature enabled.
		0	1	1	External reference, internal buffer, temperature enabled.
		1	1	0	External reference, temperature disabled.
		1	1	1	External reference, internal buffer, temperature disabled.
[2:1]	SEQ	Channel sequencer. Allows for scanning channels in an IN0 to IN[7:0] fashion. Refer to the Sequencer section.			
		Bit 2	**Bit 1**		**Function**
		0	0		Disable sequencer.
		0	1		Update configuration during sequence.
		1	0		Scan IN0 to IN[7:0] (set in CFG[9:7]), then temperature.
		1	1		Scan IN0 to IN[7:0] (set in CFG[9:7]).
0	RB	Read back the CFG register. 0 = Read back current configuration at end of data. 1 = Do not read back contents of configuration.			

[1] X = don't care.

GENERAL TIMING WITHOUT A BUSY INDICATOR

Figure 35 details the timing for all three modes: reading/writing during conversion, after conversion, and spanning conversion. Note that the gating item for both CFG and data readback is at the end of conversion (EOC). At the end of conversions (EOC), if CNV is high, the busy indicator is disabled.

As detailed previously, the data access should occur up to safe data reading/writing time, t_{DATA}. If the full CFG word was not written to prior to EOC, it is discarded and the current configuration remains. If the conversion result is not read out fully prior to EOC, it is lost as the ADC updates SDO with the MSB of the current conversion. For detailed timing, refer to Figure 36 and Figure 37, which depict reading/writing spanning conversion with all timing details, including setup, hold, and SCK.

When CNV is brought low after EOC, SDO is driven from high impedance to the MSB. Falling SCK edges clock out bits starting with MSB − 1.

The SCK can idle high or low depending on the clock polarity (CPOL) and clock phase (CPHA) settings if SPI is used. A simple solution is to use CPOL = CPHA = 0 as shown in Figure 35 with SCK idling low.

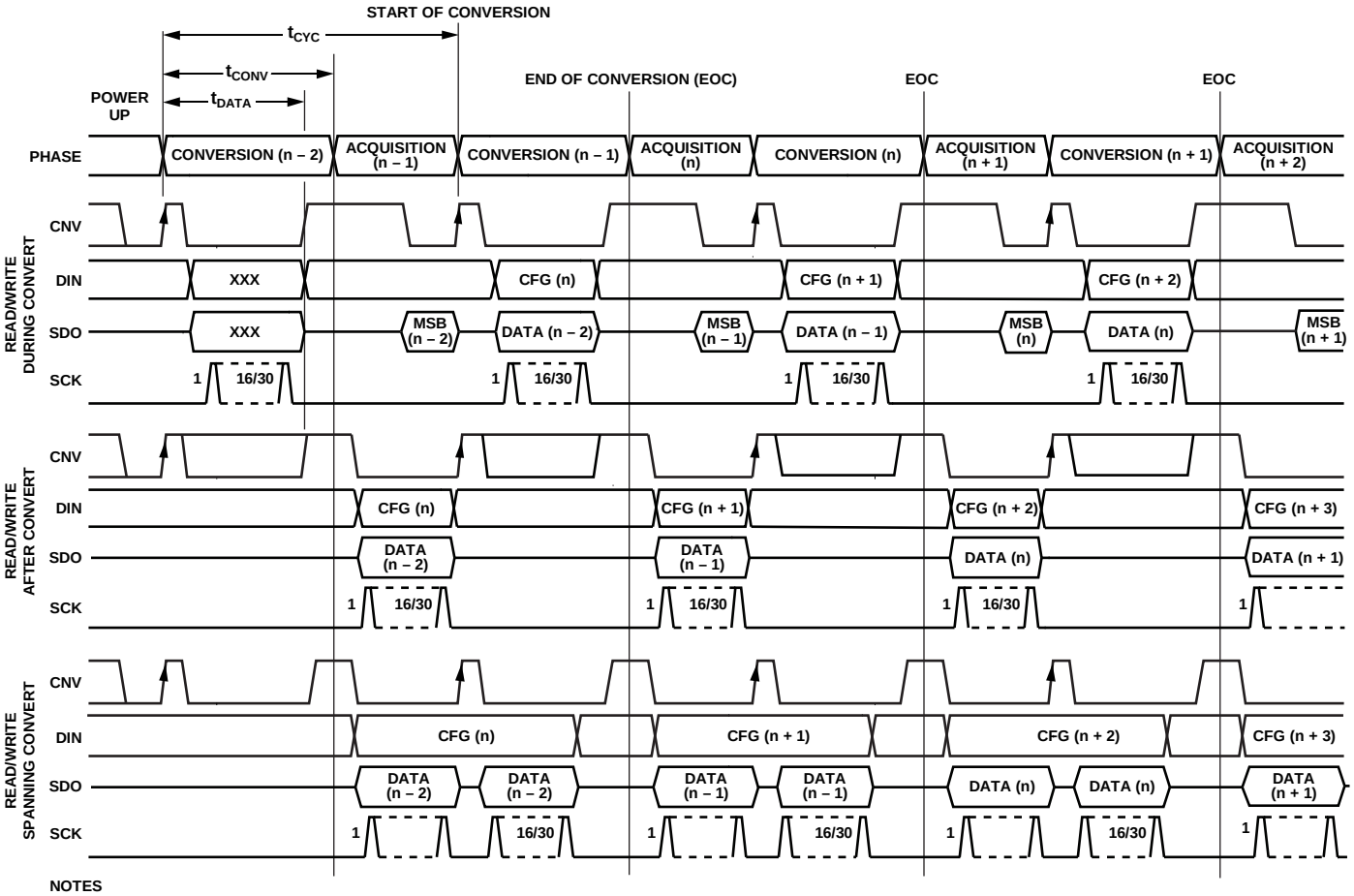

NOTES
1. CNV MUST BE HIGH PRIOR TO THE END OF CONVERSION (EOC) TO AVOID THE BUSY INDICATOR. A TOTAL OF 16 SCK FALLING EDGES IS REQUIRED TO RETURN SDO TO HIGH-Z. IF CFG READBACK IS ENABLED, A TOTAL OF 30 SCK FALLING EDGES IS REQUIRED TO RETURN SDO TO HIGH-Z.

Figure 35. General Interface Timing for the AD7699 Without a Busy Indicator

READ/WRITE SPANNING CONVERSION WITHOUT A BUSY INDICATOR

This mode is used when the AD7699 is connected to any host using an SPI, serial port, or FPGA. The connection diagram is shown in Figure 36, and the corresponding timing is given in Figure 37. For SPI, the host should use CPHA = CPOL = 0. Reading/writing spanning conversion is shown, which covers all three modes detailed in the Digital Interface section. For this mode, the host must generate the data transfer based on the conversion time. For an interrupt driven transfer, refer to the next section, which uses a busy indicator.

A rising edge on CNV initiates a conversion, forces SDO to high impedance, and ignores data present on DIN. After a conversion is initiated, it continues until completion irrespective of the state of CNV. CNV must be returned high before the safe data transfer time, t_{DATA}, and then held high beyond the conversion time, t_{CONV}, to avoid generation of the busy signal indicator.

After the conversion is complete, the AD7699 enters the acquisition phase and powers down. When the host brings CNV low after t_{CONV} (max), the MSB is enabled on SDO. The host also must enable the MSB of CFG at this time (if necessary) to begin the CFG update. While CNV is low, both a CFG update and a data readback take place. The first 14 SCK rising edges are used to update the CFG, and the first 15 SCK falling edges clock out the conversion results starting with MSB − 1. The restriction for both configuring and reading is that they both must occur before the t_{DATA} time of the next conversion elapses. All 14 bits of CFG[13:0] must be written, or they are ignored. In addition, if the 16-bit conversion result is not read back before t_{DATA} elapses, it is lost.

The SDO data is valid on both SCK edges. Although the rising edge can be used to capture the data, a digital host using the SCK falling edge allows a faster reading rate, provided it has an acceptable hold time. After the 16th (or 30th) SCK falling edge, or when CNV goes high (whichever occurs first), SDO returns to high impedance.

If CFG readback is enabled, the CFG associated with the conversion result is read back MSB first following the LSB of the conversion result. A total of 30 SCK falling edges is required to return SDO to high impedance if this is enabled.

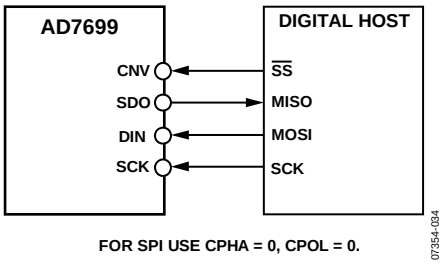

Figure 36. Connection Diagram for the AD7699 Without a Busy Indicator

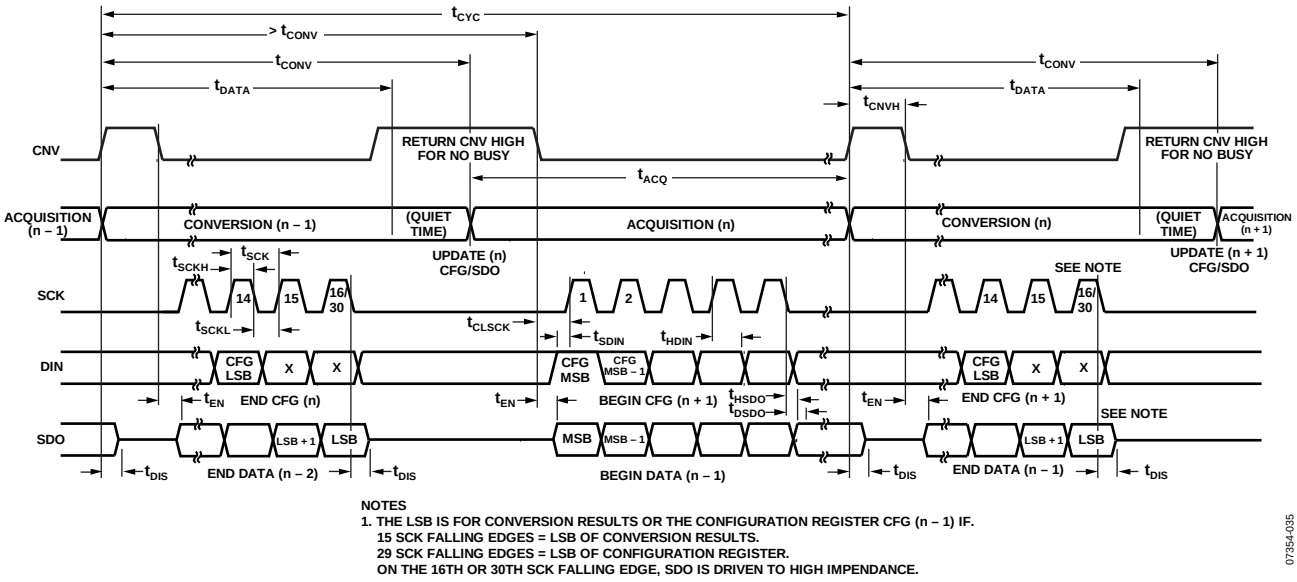

NOTES
1. THE LSB IS FOR CONVERSION RESULTS OR THE CONFIGURATION REGISTER CFG (n – 1) IF.
15 SCK FALLING EDGES = LSB OF CONVERSION RESULTS.
29 SCK FALLING EDGES = LSB OF CONFIGURATION REGISTER.
ON THE 16TH OR 30TH SCK FALLING EDGE, SDO IS DRIVEN TO HIGH IMPENDANCE.

Figure 37. Serial Interface Timing for the AD7699 Without a Busy Indicator

GENERAL TIMING WITH A BUSY INDICATOR

Figure 38 details the timing for all three modes: reading/writing during conversion, after conversion, and spanning conversion. Note that the gating item for both CFG and data readback is at the end of conversion (EOC). As detailed previously, the data access should occur up to safe data reading/writing time, t_{DATA}. If the full CFG word is not written to prior to EOC, it is discarded and the current configuration remains.

At the EOC, if CNV is low, the busy indicator is enabled. In addition, to generate the busy indicator properly, the host must assert a minimum of 17 SCK falling edges to return SDO to high impedance because the last bit of data on SDO remains active. Unlike the case detailed in the General Timing Without a Busy Indicator section, if the conversion result is not read out fully prior to EOC, the last bit clocked out remains. If this bit is low, the busy signal indicator cannot be generated because the digital output requires a high impedance, or a bit remaining high, to low transition for the interrupt input of the host. A good example of this occurs when an SPI host sends 16 SCKs because these are usually limited to 8-bit or 16-bit bursts, thus the LSB remains. Because the transition noise of the AD7699 is 4 LSBs peak to peak (or greater), the LSB is low 50% of the time. For this interface, the SPI host needs to burst 24 SCKs, or a QSPI interface can be used and programmed for 17 SCKs.

The SCK can idle high or low depending on the CPOL and CPHA settings if SPI is used. A simple solution is to use CPOL = CPHA = 1 (not shown) with SCK idling high.

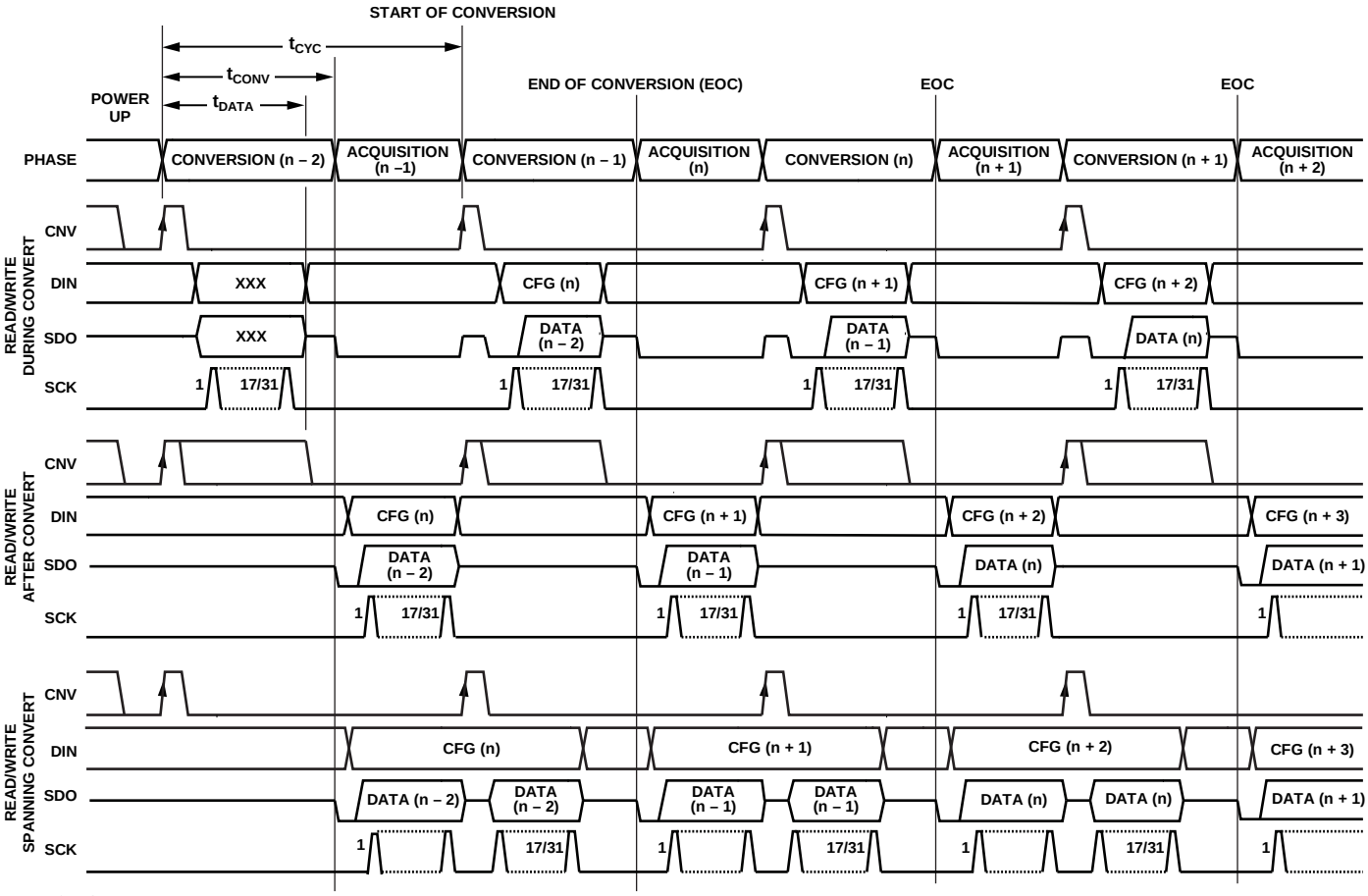

NOTES
1. CNV MUST BE HIGH PRIOR TO THE END OF CONVERSION (EOC) TO AVOID THE BUSY INDICATOR. A TOTAL OF 17 SCK FALLING EDGES IS REQUIRED TO RETURN SDO TO HIGH-Z. IF CFG READBACK IS ENABLED, A TOTAL OF 31 SCK FALLING EDGES IS REQUIRED TO RETURN SDO TO HIGH-Z.

Figure 38. General Interface Timing for the AD7699 With a Busy Indicator

READ/WRITE SPANNING CONVERSION WITH A BUSY INDICATOR

This mode is used when the AD7699 is connected to any host using an SPI, serial port, or FPGA with an interrupt input. The connection diagram is shown in Figure 39, and the corresponding timing is given in Figure 40. For SPI, the host should use CPHA = CPOL = 1. Reading/writing spanning conversion is shown, which covers all three modes detailed in the Digital Interface section.

A rising edge on CNV initiates a conversion, forces SDO to high impedance, and ignores data present on DIN. After a conversion is initiated, it continues until completion irrespective of the state of CNV. CNV must be returned low before the safe data transfer time, t_{DATA}, and then held low beyond the conversion time, t_{CONV}, to generate the busy signal indicator. When the conversion is complete, SDO transitions from high impedance to low with a pull-up to VIO, which can be used to interrupt the host to begin data transfer.

After the conversion is complete, the AD7699 enters the acquisition phase and power-down. The host must enable the MSB of CFG at this time (if necessary) to begin the CFG update. While CNV is low, both a CFG update and a data readback take place. The first 14 SCK rising edges are used to update the CFG register, and the first 16 SCK falling edges clock out the conversion results starting with the MSB. The restriction for both configuring and reading is that they both occur before the t_{DATA} time elapses for the next conversion. All 14 bits of CFG[13:0] must be written or they are ignored. Also, if the 16-bit conversion result is not read back before t_{DATA} elapses, it is lost.

The SDO data is valid on both SCK edges. Although the rising edge can be used to capture the data, a digital host using the SCK falling edge allows a faster reading rate, provided it has an acceptable hold time. After the optional 17th SCK falling edge, SDO returns to high impedance. Note that, if the optional SCK falling edge is not used, the busy feature cannot be detected if the LSB for the conversion is low.

If CFG readback is enabled, the CFG register associated with the conversion result *(n − 1)* is read back MSB first following the LSB of the conversion result. A total of 31 SCK falling edges is required to return SDO to high impedance if this is enabled.

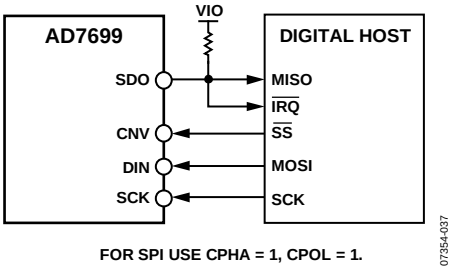

Figure 39. Connection Diagram for the AD7699 with a Busy Indicator

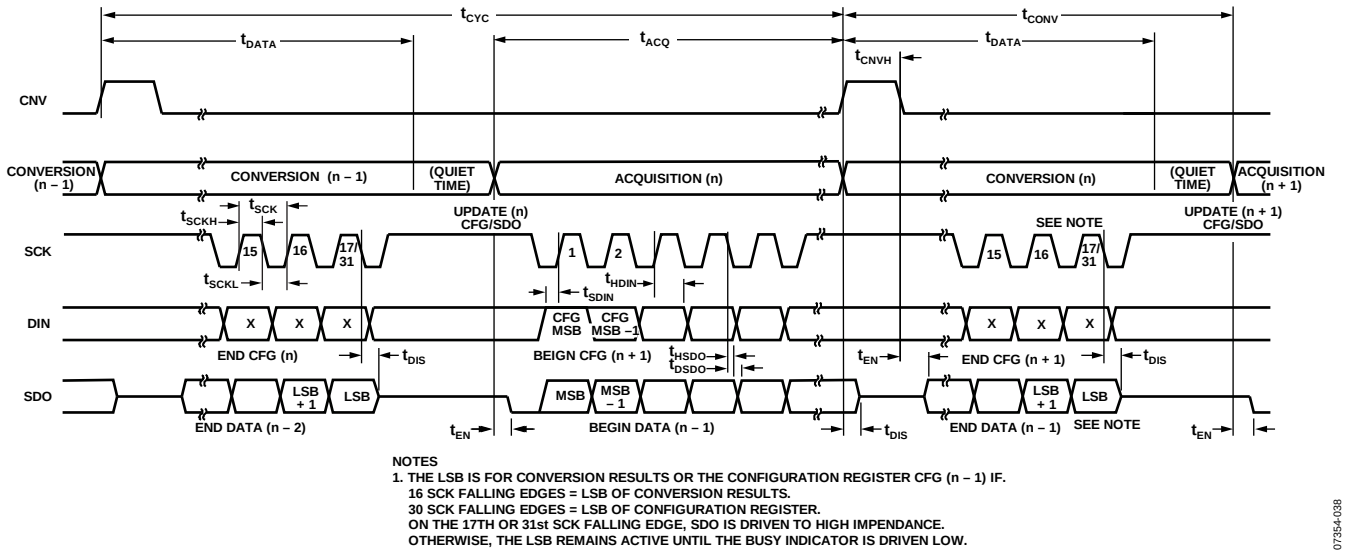

NOTES
1. THE LSB IS FOR CONVERSION RESULTS OR THE CONFIGURATION REGISTER CFG (n – 1) IF.
16 SCK FALLING EDGES = LSB OF CONVERSION RESULTS.
30 SCK FALLING EDGES = LSB OF CONFIGURATION REGISTER.
ON THE 17TH OR 31st SCK FALLING EDGE, SDO IS DRIVEN TO HIGH IMPENDANCE.
OTHERWISE, THE LSB REMAINS ACTIVE UNTIL THE BUSY INDICATOR IS DRIVEN LOW.

Figure 40. Serial Interface Timing for the AD7699 with a Busy Indicator

APPLICATION HINTS

LAYOUT

The printed circuit board that houses the AD7699 should be designed so that the analog and digital sections are separated and confined to certain areas of the board. The pinout of the AD7699, with all its analog signals on the left side and all its digital signals on the right side, eases this task.

Avoid running digital lines under the device because these couple noise onto the die unless a ground plane under the AD7699 is used as a shield. Fast switching signals, such as CNV or clocks, should not run near analog signal paths. Crossover of digital and analog signals should be avoided.

At least one ground plane should be used. It can be common or split between the digital and analog sections. In the latter case, the planes should be joined underneath the AD7699.

The AD7699 voltage reference input, REF, has a dynamic input impedance and should be decoupled with minimal parasitic inductances. This is done by placing the reference decoupling ceramic capacitor close to, ideally right up against, the REF and GND pins and connecting them with wide, low impedance traces.

Finally, the power supplies, VDD and VIO, of the AD7699 should be decoupled with ceramic capacitors, typically 100 nF, placed close to the AD7699 and connected using short, wide traces to provide low impedance paths and to reduce the effect of glitches on the power supply lines.

EVALUATING AD7699 PERFORMANCE

Other recommended layouts for the AD7699 are outlined in the documentation of the evaluation board for the AD7699 (EVAL-AD76MUXCBZ). The evaluation board package includes a fully assembled and tested evaluation board, documentation, and software for controlling the board from a PC via the evaluation controller board, EVAL-CONTROL BRD3.

OUTLINE DIMENSIONS

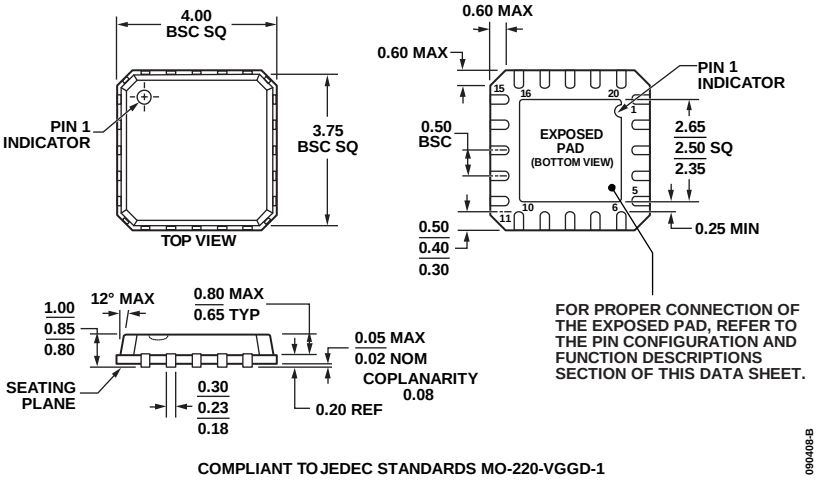

Figure 41. 20-Lead Lead Frame Chip Scale Package (LFCSP_VQ)
4 mm × 4 mm Body, Very Thin Quad
(CP-20-4)
Dimensions shown in millimeters

ORDERING GUIDE

Model	Integral Nonlinearity	No Missing Code	Temperature Range	Package Description	Package Option	Ordering Quantity
AD7699BCPZ[1]	±1.5 LSB max	16 bits	−40°C to +85°C	20-Lead LFCSP_VQ	CP-20-4	Tray, 490
AD7699BCPZRL7[1]	±1.5 LSB max	16 bits	−40°C to +85°C	20-Lead LFCSP_VQ	CP-20-4	Reel, 1500
EVAL-AD7699CBZ[1]				Evaluation Board		
EVAL-CONTROL BRD3Z[1, 2]				Controller Board		

[1] RoHS Compliant Part.
[2] This controller board allows a PC to control and communicate with all Analog Devices evaluation boards whose model numbers end in CB.

NOTES

©2008 Analog Devices, Inc. All rights reserved. Trademarks and registered trademarks are the property of their respective owners.
D07354-0-10/08(0)