查询MDJ-009-S供应商

捷多邦，专业PCB打样工厂，24小时加急出货

ADAM TECH

Adam Technologies, Inc.

MINI DIN JACKS

RIGHT ANGLE PCB MOUNT

MDJ SERIES

MDJ SERIES
MINI DIN JACK-UNSHIELDED

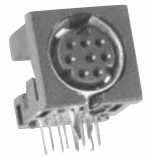

MDJ-008

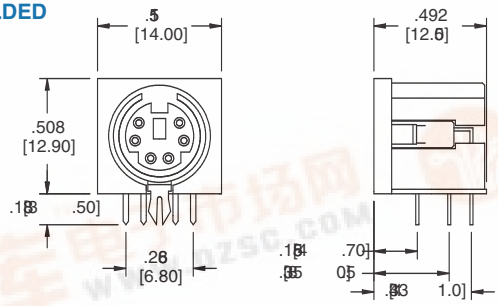

MDJ SERIES
MINI DIN JACK WITH
FOUR SIDED SHIELD

MDJ-009-S

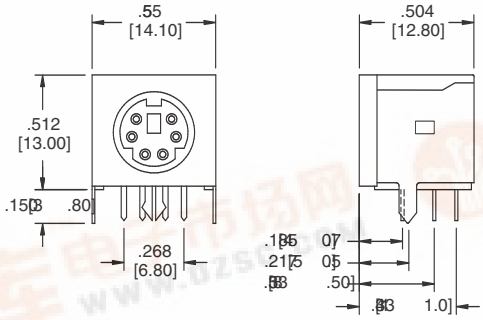

MDJ SERIES
MINI DIN JACK
FULLY SHIELDED

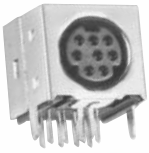

MDJ-008-FS

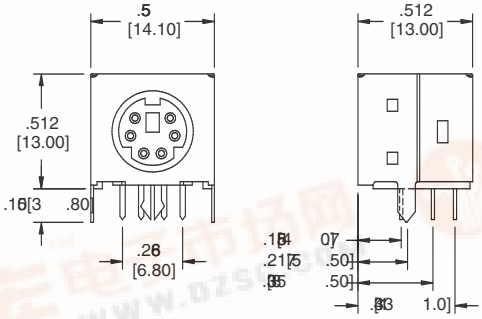

MATING FACE CONFIGURATIONS

3 Position

4 Position

5 Position

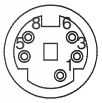

6 Position

7 Position

8 Position

9 Position

9A Position

PANEL GROUND OPTIONS

MDJ-009-FS-PG

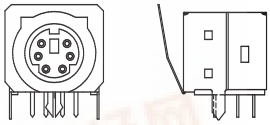

Spring Panel Ground

MDJ-008-FS-PG4

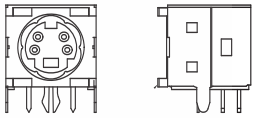

Four Finger Panel Ground

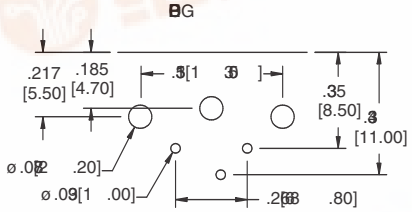

3 Position

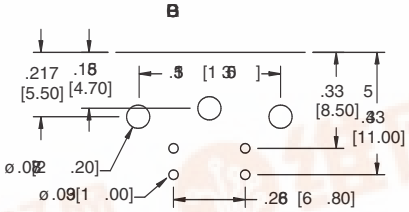

4 Position

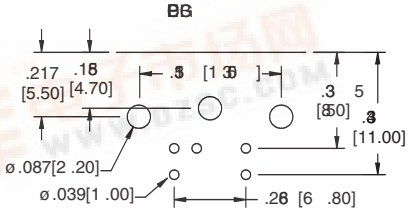

5 Position

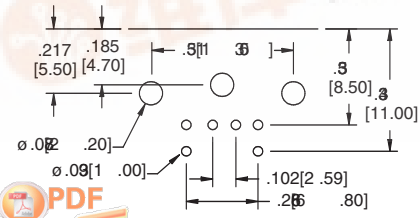

6 Position

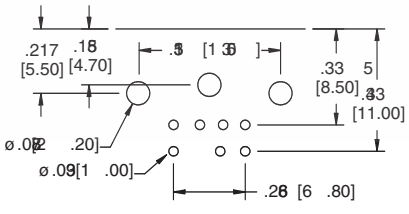

7 Position

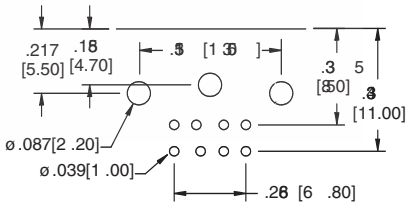

8 Position

找PDF 维库一下 pdf.dzsc.com