查询1SV287供应商 捷多邦，专业PCB打样工厂，24小时加急出货

Silicon Epitaxial Planar Diode

1SV287

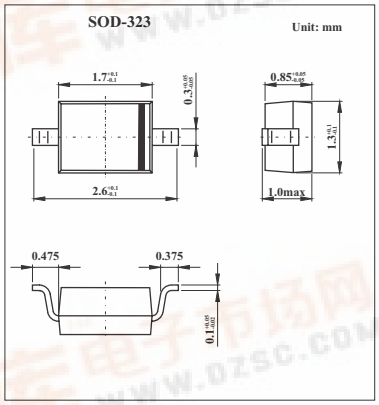

■ Features

- High Capacitance Ratio:C2V/C25V = 7.6(Typ.)
- Low Series Resistance:rs = 1.9 Ω (Typ.)
- Excellent C-V Characteristics,and Small Tracking Error.
- Useful for small size Tuner.

■ Absolute Maximum Ratings Ta = 25℃

Parameter	Symbol	Value	Unit
Reverse Voltage	V_R	30	V
Peak Reverse Voltage	V_{RM}	35(R_L = 10 KΩ)	V
Junction Temperature	T_j	125	℃
Storage Temperature Range	T_{stg}	-55 to +125	℃

■ Electrical Characteristics Ta = 25℃

Parameter	Symbol	Conditions	Min	Typ	Max	Unit
Reverse Voltage	V_R	I_R = 1 μ A	30			V
Reverse Current	I_R	V_R = 28 V			10	nA
Capacitance	C_{2V}	f = 1 MHz;V_R = 2 V	4.2		5.7	pF
	C_{25V}	f = 1 MHz;V_R = 25 V	0.53		0.68	
Capacitance Ratio	C_{2V}/C_{25V}		7.3			
Series Resistance	r_s	V_R = 1V, f = 470 MHz		1.9	2.3	Ω

Note :

Available in matched group for capacitance to 6%.

$$\frac{C(Max.)-C(Min.)}{C(Min.)} \leqslant 0.06$$

(V_R=2~25V)

■ Marking

Marking	TK

找PDF 维库一下 pdf.dzsc.com