N-Channel Silicon MOSFET
2SK2925S

Features

- Low on-resistance
  R_{DS} =0.060Ω typ.
- High speed switching
- 4V gate drive device can be driven from 5V source

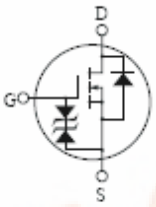

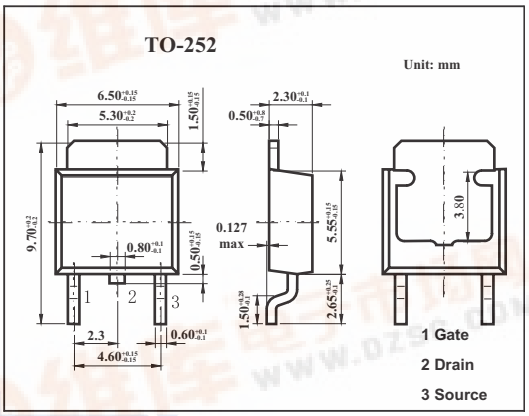

Absolute Maximum Ratings Ta = 25℃

Parameter	Symbol	Rating	Unit
Drain to source voltage	V_{DSS}	60	V
Gate to source voltage	V_{GSS}	±20	V
Drain current	I_D	10	A
	I_{dp} *	40	A
Power dissipation	P_D	20	W
Channel temperature	T_{ch}	150	℃
Storage temperature	T_{stg}	-55 to +150	℃

* PW≤10μs,Duty Cycle≤1%

Electrical Characteristics Ta = 25℃

Parameter	Symbol	Testconditons	Min	Typ	Max	Unit
Drain to source breakdown voltage	V_{DSS}	I_D=10mA,V_{GS}=0	60			V
Drain cut-off current	I_{DSS}	V_{DS}=60V,V_{GS}=0			10	μA
Gate leakage current	I_{GSS}	V_{GS}=±16V,V_{DS}=0			±10	μA
Gate to source cutoff voltage	$V_{GS(off)}$	V_{DS}=10V,I_D=1mA	1.5		2.5	V
Forward transfer admittance	$\lvert Y_{fs} \rvert$	V_{DS}=10V,I_D=5A	5	8		S
Drain to source on-state resistance	$R_{DS(on)}$	V_{GS}=10V,I_D=5A		0.060	0.080	Ω
		V_{GS}=4V,I_D=5A		0.095	0.160	Ω
Input capacitance	C_{iss}	V_{DS}=10V,V_{GS}=0,f=1MHZ		350		pF
Output capacitance	C_{oss}			190		pF
Reverse transfer capacitance	C_{rss}			70		pF
Turn-on delay time	t_{on}	I_D=5A,$V_{GS(on)}$=10V,R_L=6Ω		10		ns
Rise time	t_r			55		ns
Turn-off delay time	t_{off}			60		ns
Fall time	t_f			70		ns