Mos Field Effect Power Transistor

2SJ302

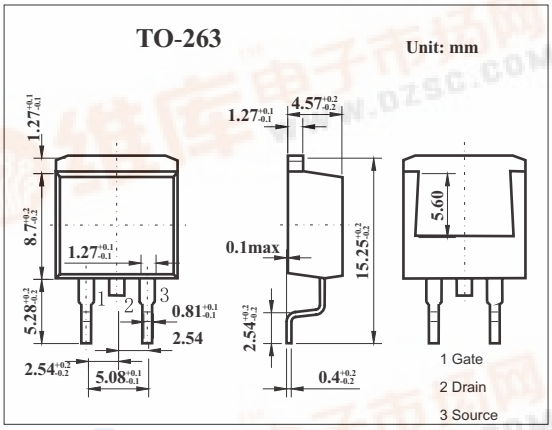

■ Features

- Low on-state resistance

  $R_{DS(on)} \leqslant 0.1\,\Omega$ (V_{GS}=-10V, I_D=-8A)

  $R_{DS(on)} \leqslant 0.24\,\Omega$ (V_{GS}=-4V, I_D=-6A)

- Low C_{iss} C_{iss}=1200PF TYP.

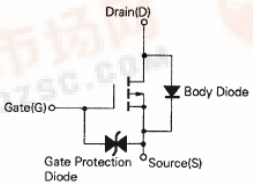

■ Absolute Maximum Ratings Ta = 25℃

Parameter	Symbol	Rating	Unit
Drain to source voltage	V_{DSS}	-60	V
Gate to source voltage	V_{GSS}	-20,+10	V
Drain current (DC)	I_D	±16	A
Drain current(pulse) *	I_D	±64	A
Power dissipation	P_D	75	W
Channel temperature	T_{ch}	150	℃
Storage temperature	T_{stg}	-55 to +150	℃

* PW ≤ 10 μs; d ≤ 1%.

■ Electrical Characteristics Ta = 25℃

Parameter	Symbol	Testconditons	Min	Typ	Max	Unit
Drain cut-off current	I_{DSS}	V_{DS}=-60V, V_{GS}=0			-10	μA
Gate leakage current	I_{GSS}	V_{GS}=±16V, V_{DS}=0			±10	μA
Gate cut-off voltage	$V_{GS(off)}$	V_{DS}=-10V, I_D=-1mA	-1.0		-2.0	V
Forward transfer admittance	| Y_{fs} |	V_{DS}=-10V, I_D=-8A	5.0			s
Drain to source on-state resistance	$R_{DS(on)}$	V_{GS}=-10V, I_D=-8A		75	100	mΩ
		V_{GS}=-4V, I_D=-6A		130	240	mΩ
Input capacitance	C_{iss}	V_{DS}=-10V, V_{GS}=0, f=1MHZ		1200		pF
Output capacitance	C_{oss}			670		pF
Reverse transfer capacitance	C_{rss}			290		pF
Turn-on delay time	$t_{d(on)}$	$V_{GS(on)}$=-10V, V_{DD}=-30V, I_D=--8A R_L=3.75Ω, R_G=10Ω		30		ns
Rise time	t_r			170		ns
Turn-off delay time	$t_{d(off)}$			150		ns
Fall time	t_f			130		ns
Total Gate Charge	Q_G	V_{GS}=-10V, I_D=-8A		42		nc
Gate to Source Charge	Q_{GS}	I_D=-16V		3		nc
Gate to Drain Charge	Q_{GD}	V_{DD}=-48V		17		nc
Reverse Recovery Time	t_{rr}	I_F=-16A, V_{GS}=0, di/dt=50A/μs		110		ns
Reverse Recvery Charge	Q_{rr}			220		nc
Diode Forward Voltage	V_{SD}	I_F=-16A, V_{GS}=0		1		V