# Silicon N-Channel Power F-MOSFET
# 2SK3031

## ■ Features

- Avalanche energy capacity guaranteed
- High-speed switching
- Low ON-resistance
- No secondary breakdown
- Low-voltage drive
- High electrostatic breakdown voltage

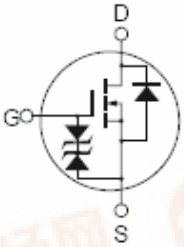


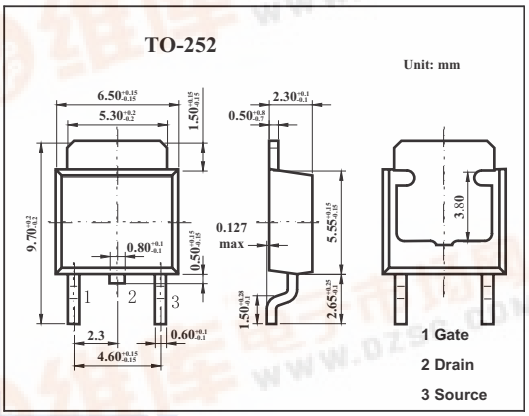


## ■ Absolute Maximum Ratings Ta = 25℃

| Parameter | | Symbol | Rating | Unit |
|---|---|---|---|---|
| Drain to source voltage | | $V_{DSS}$ | 100 | V |
| Gate to source voltage | | $V_{GSS}$ | ±20 | V |
| Drain current | | $I_D$ | ±15 | A |
| | | $I_{dp}$ * | ±30 | A |
| Power dissipation | $T_C$=25℃ | $P_D$ | 20 | W |
| | $T_A$=25℃ | | 1 | W |
| Channel temperature | | $T_{ch}$ | 150 | ℃ |
| Storage temperature | | $T_{stg}$ | -55 to +150 | ℃ |

* PW≤10μs,Duty Cycle≤1%

## ■ Electrical Characteristics Ta = 25℃

| Parameter | Symbol | Testconditons | Min | Typ | Max | Unit |
|---|---|---|---|---|---|---|
| Drain to source breakdown voltage | $V_{DSS}$ | $I_D$=1mA,$V_{GS}$=0 | 100 | | | V |
| Drain cut-off current | $I_{DSS}$ | $V_{DS}$=80V,$V_{GS}$=0 | | | 10 | μA |
| Gate leakage current | $I_{GSS}$ | $V_{GS}$=±20V,$V_{DS}$=0 | | | ±10 | μA |
| Gate threshold voltage | $V_{GS(th)}$ | $V_{DS}$=10V,$I_D$=1mA | 1 | | 2.5 | V |
| Forward transfer admittance | \| $Y_{fs}$ \| | $V_{DS}$=10V,$I_D$=8A | 4 | 7.5 | | S |
| Drain to source on-state resistance | $R_{DS(on)}$ | $V_{GS}$=10V,$I_D$=8A | | 90 | 135 | mΩ |
| | | $V_{GS}$=4V,$I_D$=8A | | 100 | 160 | mΩ |
| Input capacitance | $C_{iss}$ | $V_{DS}$=10V,$V_{GS}$=0,f=1MHZ | | 300 | | pF |
| Output capacitance | $C_{oss}$ | | | 190 | | pF |
| Reverse transfer capacitance | $C_{rss}$ | | | 30 | | pF |
| Turn-on delay time | $t_{on}$ | $I_D$=8A,$V_{GS(on)}$=10V,$R_L$=3.75Ω,$V_{DD}$=30V | | 20 | | ns |
| Rise time | $t_r$ | | | 85 | | ns |
| Turn-off delay time | $t_{off}$ | | | 1440 | | ns |
| Fall time | $t_f$ | | | 330 | | ns |