MOS Field Effect Transistor
2SK3402

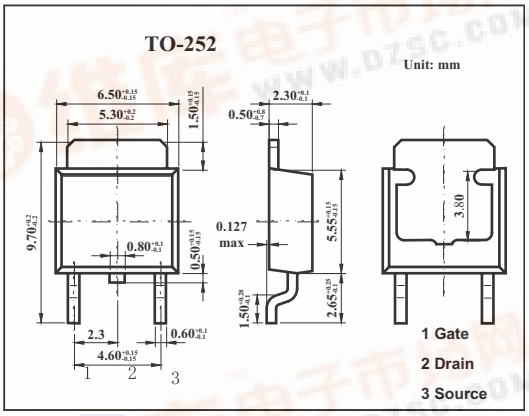

■ Features

- Low on-resistance
  $R_{DS(on)1}$ =15 mΩ MAX. (V_{GS} = 10 V, I_D = 18A)
  $R_{DS(on)2}$ = 22 mΩ MAX. (V_{GS} = 4.0 V, I_D = 18A)
- Low C_{iss} : C_{iss} = 3200 pF TYP.
- Built-in gate protection diode

■ Absolute Maximum Ratings Ta = 25℃

Parameter	Symbol	Rating	Unit
Drain to source voltage	V_{DSS}	60	V
Gate to source voltage	V_{GSS}	±20	V
Drain current	I_D	±36	A
	I_{dp} *	±144	A
Power dissipation Tc=25℃	P_D	40	W
TA=25℃		1.0	
Channel temperature	T_{ch}	150	℃
Storage temperature	T_{stg}	-55 to +150	℃

* PW≤10μs,Duty Cycle≤1%

■ Electrical Characteristics Ta = 25℃

Parameter	Symbol	Testconditons	Min	Typ	Max	Unit
Drain cut-off current	I_{DSS}	V_{DS}=60V,V_{GS}=0			10	μA
Gate leakage current	I_{GSS}	V_{GS}=±20V,V_{DS}=0			±10	μA
Gat cutoff voltage	$V_{GS(off)}$	V_{DS}=10V,I_D=1mA	1.5	2.0	2.5	V
Forward transfer admittance	| Y_{fs} |	V_{DS}=10V,I_D=18A	13	27		S
Drain to source on-state resistance	$R_{DS(on)1}$	V_{GS}=10V,I_D=18A		12	15	mΩ
	$R_{DS(on)2}$	V_{GS}=4.0V,I_D=18A		15	22	mΩ
Input capacitance	C_{iss}	V_{DS}=10V,V_{GS}=0,f=1MHZ		3200		pF
Output capacitance	C_{oss}			520		pF
Reverse transfer capacitance	C_{rss}			270		pF
Turn-on delay time	t_{on}	I_D=18A,$V_{GS(on)}$=10V,R_G=10Ω,V_{DD}=30V		36		ns
Rise time	t_r			310		ns
Turn-off delay time	t_{off}			170		ns
Fall time	t_f			180		ns
Total Gate Charge	Q_G	I_D =36A, V_{DD} = 48 V, V_{GS} = 10 V		61		nC
Gate to Source Charge	Q_{GS}			8.2		nC
Gate to Drain Charge	Q_{GD}			17		nC