MOS Field Effect Transistor
2SK3482

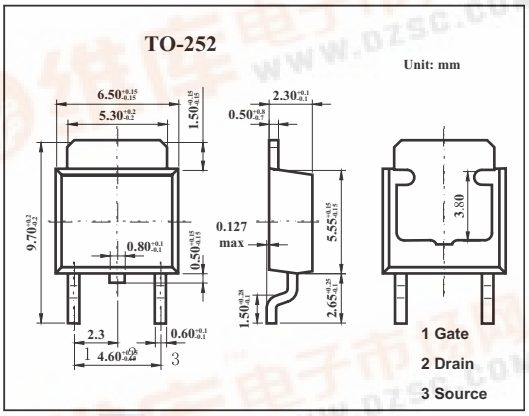

■ Features

- Super low on-state resistance:
  $R_{DS(on)1}$ = 33m Ω MAX. (V_{GS} = 10 V, I_D = 18A)
  $R_{DS(on)2}$ = 39 m Ω MAX. (V_{GS} = 4.5 V, I_D = 18A)
- Low C_{iss}: C_{iss} = 3600 pF TYP.

■ Absolute Maximum Ratings Ta = 25℃

Parameter	Symbol	Rating	Unit
Drain to source voltage	V_{DSS}	100	V
Gate to source voltage	V_{GSS}	±20	V
Drain current	I_D	±36	A
	I_{dp} *	±100	A
Power dissipation T_C=25℃ T_A=25℃	P_D	50 1.0	W
Channel temperature	T_{ch}	150	℃
Storage temperature	T_{stg}	-55 to +150	℃

* PW≤10 μ s,Duty Cycle≤1%

■ Electrical Characteristics Ta = 25℃

Parameter	Symbol	Testconditons	Min	Typ	Max	Unit
Drain cut-off current	I_{DSS}	V_{DS}=100V,V_{GS}=0			10	μ A
Gate leakage current	I_{GSS}	V_{GS}=±20V,V_{DS}=0			±10	μ A
Gat cutoff voltage	$V_{GS(off)}$	V_{DS}=10V,I_D=1mA	1.5	2.0	2.5	V
Forward transfer admittance	$\lvert Y_{fs} \rvert$	V_{DS}=10V,I_D=18A	12	23		S
Drain to source on-state resistance	$R_{DS(on)1}$	V_{GS}=10V,I_D=18A		27	33	m Ω
	$R_{DS(on)2}$	V_{GS}=4.5V,I_D=18A		29	39	m Ω
Input capacitance	C_{iss}	V_{DS}=10V,V_{GS}=0,f=1MHZ		3600		pF
Output capacitance	C_{oss}			360		pF
Reverse transfer capacitance	C_{rss}			190		pF
Turn-on delay time	t_{on}	I_D=18A,$V_{GS(on)}$=10V,R_G=0 Ω ,V_{DD}=50V		15		ns
Rise time	t_r			10		ns
Turn-off delay time	t_{off}			68		ns
Fall time	t_f			6		ns
Total Gate Charge	Q_G	I_D =36A, V_{DD} =80V, V_{GS} = 10 V		72		nC
Gate to Source Charge	Q_{GS}			10		nC
Gate to Drain Charge	Q_{GD}			19		nC