THE DRAWINGS AND INFORMATION CONTAINED HEREIN ARE THE EXCLUSIVE PROPERTY OF ACTEL.
THE INFORMATION, DRAWINGS AND DESIGN CONCEPTS CONTAINED HEREIN ARE CONFIDENTIAL/PROPRIETARY, SHALL BE MAINTAINED IN STRICT CONFIDENCE, AND SHALL NOT BE RELEASED TO ANY THIRD PARTY WITHOUT THE EXPRESS WRITTEN PERMISSION OF ACTEL.

ECN NO.	REV.	DESCRIPTION OF CHANGE	EFFECTIVE DATE	ORIGINATOR
2007356	0	Initial	06/15/2007	Lijie Zhao

捷多邦，专业PCB打样工厂，24小时加急出货
查询C149-176-166-B5供应商

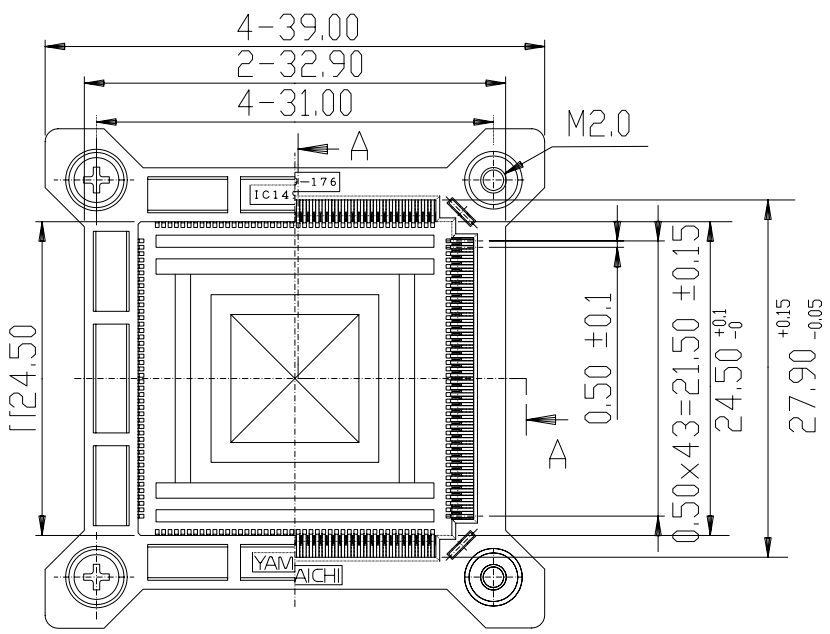

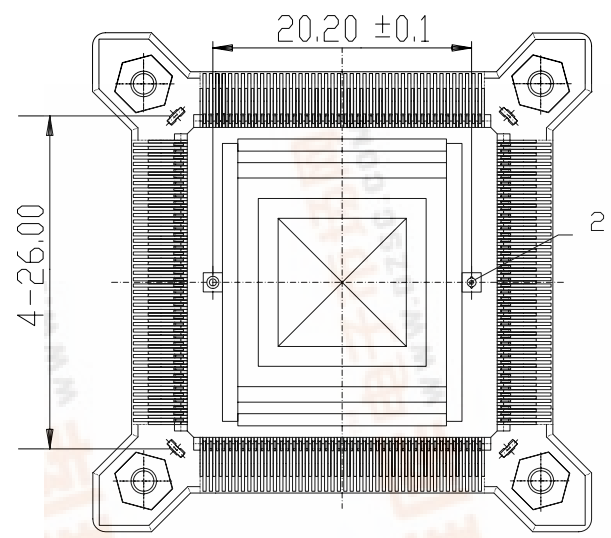

Recommended PCB Layout

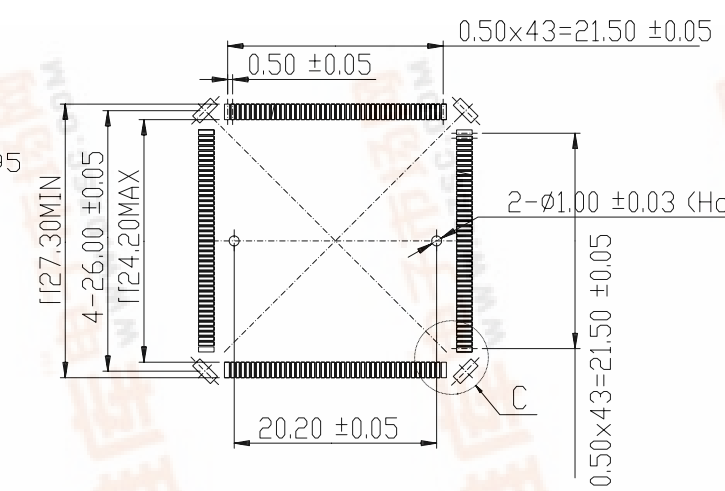

Applicable IC Dimension

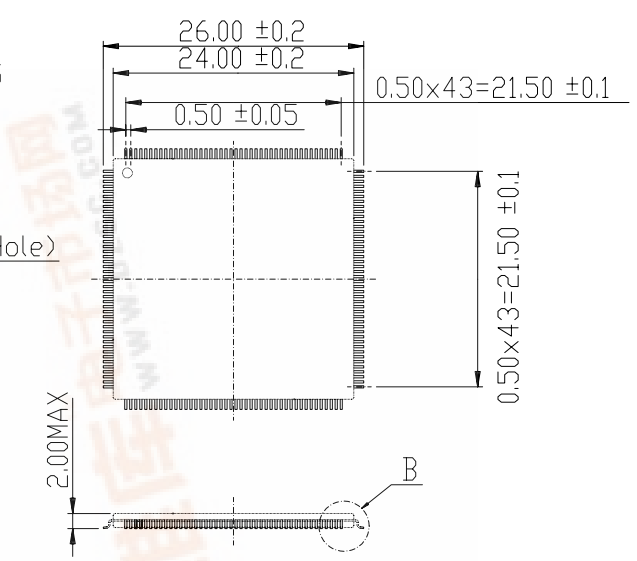

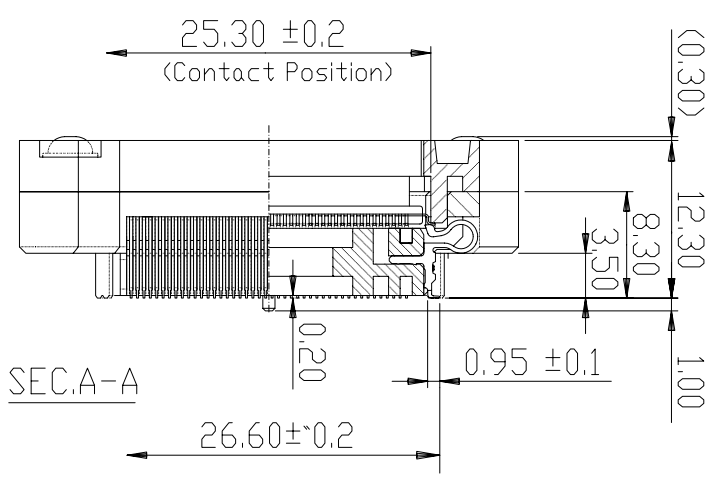

Notes:

1. Controlling dimensions are in millimeters.
2. Yamaichi socket number IC149-176-166-B5
3. Make 2 holes on PCB when you use socket with the guide pin. Do not plate the inside of the holes.

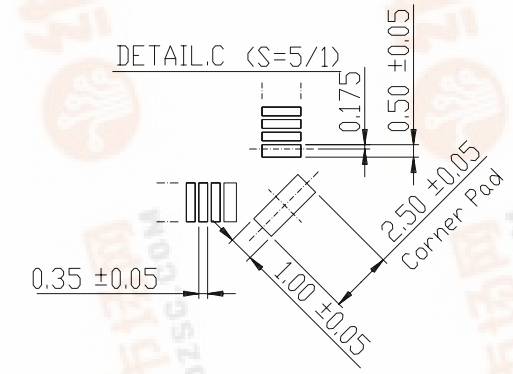

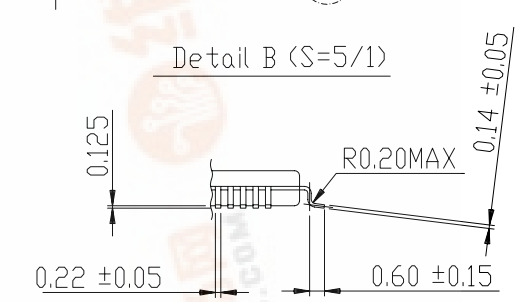

UNLESS OTHERWISE SPECIFIED DIMENSIONS ARE IN MILLIMETERS

DECIMAL	ANGULAR
X.X ±0.10	±1°
X.XX ±0.05	
X.XXX ±0.03	

MATERIAL: SEE NOTES

FINISH: SEE NOTES

DO NOT SCALE DRAWING

PROJECTION

APPROVALS	DATE
DRAWN: Lijie Zhao	6/15/07
CHECKED	
ENG'R	
RELEASED	

Actel

ACTEL CORPORATION
2061 Stierlin Court
Mountain View, CA 94043-4655

TITLE: TITLE

SY-TQG176, Yamaichi lead free prototype socket drawing for TQ176 and TQG176 packages

	VENDOR NAME: Yamaichi	ACTEL DWG. NUMBER 1-07-11070	REV 0
SIZE B	VENDOR SID(PART) NUMBER IC149-176-166-B5	VENDOR DWG. NUMBER N/A	REV
Actel Part#: SY-TQG176	SCALE: NONE	SHEET 1 OF 1	

1-06-13016 REV 1 (SHEET 1 OF 2)