查询2SC1173供应商 捷多邦，专业PCB打样工厂，24小时加急出货

Silicon NPN Power Transistors 2SC1173

DESCRIPTION

- With TO-220 package
- Complement to type 2SA473
- Collector current :I_C=3A
- Collector dissipation:P_C=10W@T_C=25℃

APPLICATIONS

- Low frequency power amplifier
- Power regulator

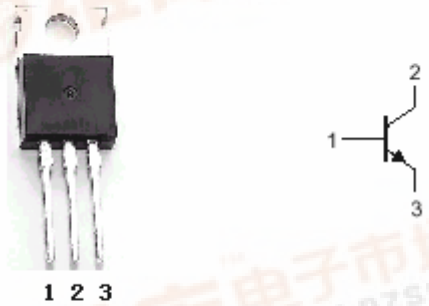

Fig.1 simplified outline (TO-220C) and symbol

PINNING

PIN	DESCRIPTION
1	Base
2	Collector;connected to mounting base
3	Emitter

固电半导体 INCHANGE SEMICONDUCTOR

Absolute maximum ratings (Ta=25℃)

SYMBOL	PARAMETER	CONDITIONS	VALUE	UNIT
V_{CBO}	Collector-base voltage	Open emitter	30	V
V_{CEO}	Collector-emitter voltage	Open base	30	V
V_{EBO}	Emitter-base voltage	Open collector	5	V
I_C	Collector current (DC)		3	A
P_C	Collector power dissipation	T_C=25℃	10	W
T_j	Junction temperature		150	℃
T_{stg}	Storage temperature		-55~150	℃

找PDF 维库一下 pdf.dzsc.com

Silicon NPN Power Transistors 2SC1173

CHARACTERISTICS

Tj=25℃ unless otherwise specified

SYMBOL	PARAMETER	CONDITIONS	MIN	TYP.	MAX	UNIT
$V_{(BR)CEO}$	Collector-emitter breakdown voltage	I_C=10mA ;I_B=0	30			V
$V_{(BR)CBO}$	Collector-base breakdown voltage	I_C=0.5mA ;I_E=0	30			V
$V_{(BR)EBO}$	Emitter-base breakdown voltage	I_E=1mA ;I_C=0	5			V
V_{CEsat}	Collector-emitter saturation voltage	I_C=2A I_B=0.2A			0.8	V
V_{BE}	Base-emitter on voltage	I_C=0.5A ; V_{CE}=2V			1.0	V
I_{CBO}	Collector cut-off current	V_{CB}=20V;I_E=0			1.0	μA
I_{EBO}	Emitter cut-off current	V_{EB}=5V; I_C=0			1.0	μA
h_{FE-1}	DC current gain	I_C=0.5A ; V_{CE}=2V	70		240	
h_{FE-2}	DC current gain	I_C=2.5A ; V_{CE}=2V	25			
C_{OB}	Output capacitance	I_E=0; V_{CB}=10V;f=1MHz		35		pF
f_T	Transition frequency	I_C=0.5A ; V_{CE}=2V		100		MHz

固电半导体 INCHANGE SEMICONDUCTOR

◆ **h_{FE-1} classifications**

O	Y
70-140	120-240

PACKAGE OUTLINE

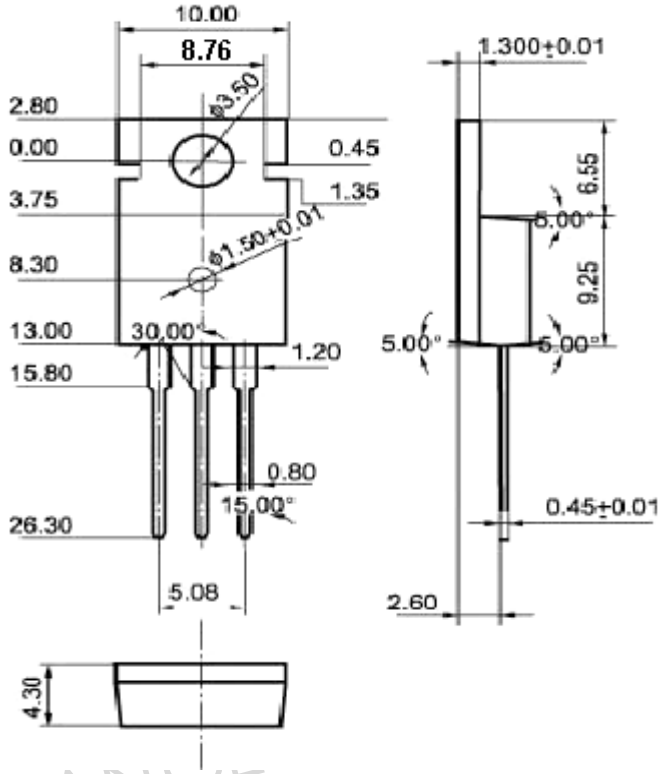

Fig.2 outline dimensions (unindicated tolerance:±0.10 mm)

固电半 UCTOR INCHANGE