查询2SD1290供应商 捷多邦，专业PCB打样工厂，24小时加急出货

Silicon NPN Power Transistors 2SD1290

DESCRIPTION

- With TO-3PN package
- Built-in damper diode
- High voltage ,high reliability
- Wide area of safe operation

APPLICATIONS

- For color TV horizontal deflection output applications

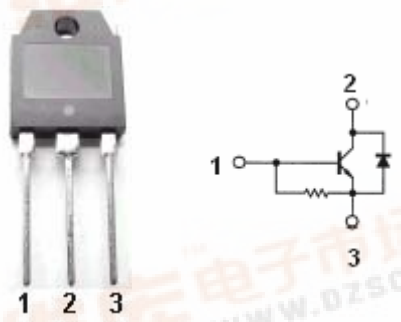

Fig.1 simplified outline (TO-3PN) and symbol

PINNING

PIN	DESCRIPTION
1	Base
2	Collector;connected to mounting base
3	Emitter

固电半导体 INCHANGE SEMICONDUCTOR

Absolute maximum ratings (Ta=25℃)

SYMBOL	PARAMETER	CONDITIONS	VALUE	UNIT
V_{CBO}	Collector-base voltage	Open emitter	1500	V
V_{EBO}	Emitter-base voltage	Open collector	5	V
I_C	Collector current (DC)		3	A
I_{CM}	Collector current (Pulse)		10	A
P_C	Collector power dissipation	T_C=25℃	50	W
T_j	Junction temperature		130	℃
T_{stg}	Storage temperature		-55~130	℃

找PDF 维库一下 pdf.dzsc.com

CHARACTERISTICS

Tj=25℃ unless otherwise specified

SYMBOL	PARAMETER	CONDITIONS	MIN	TYP.	MAX	UNIT
$V_{(BR)EBO}$	Emitter-base breakdown voltage	I_E=500mA; I_C=0	5			V
V_{CEsat}	Collector-emitter saturation voltage	I_C=2A; I_B=0.75A			5.0	V
V_{BEsat}	Base-emitter saturation voltage	I_C=2A; I_B=0.75A			1.5	V
I_{CBO}	Collector cut-off current	V_{CB}=750V; I_E=0			50	μA
		V_{CB}=1500V; I_E=0			1	mA
h_{FE}	DC current gain	I_C=2A ; V_{CE}=10V	3		8	
t_s	Storage time	I_C=2A I_{Leak}=0.75A,L_B=5μH	3		7	μs
t_f	Fall time				1	μs
V_F	Diode forward voltage	I_F=-4A,I_B=0			2.2	V

固电半导体
INCHANGE SEMICONDUCTOR

PACKAGE OUTLINE

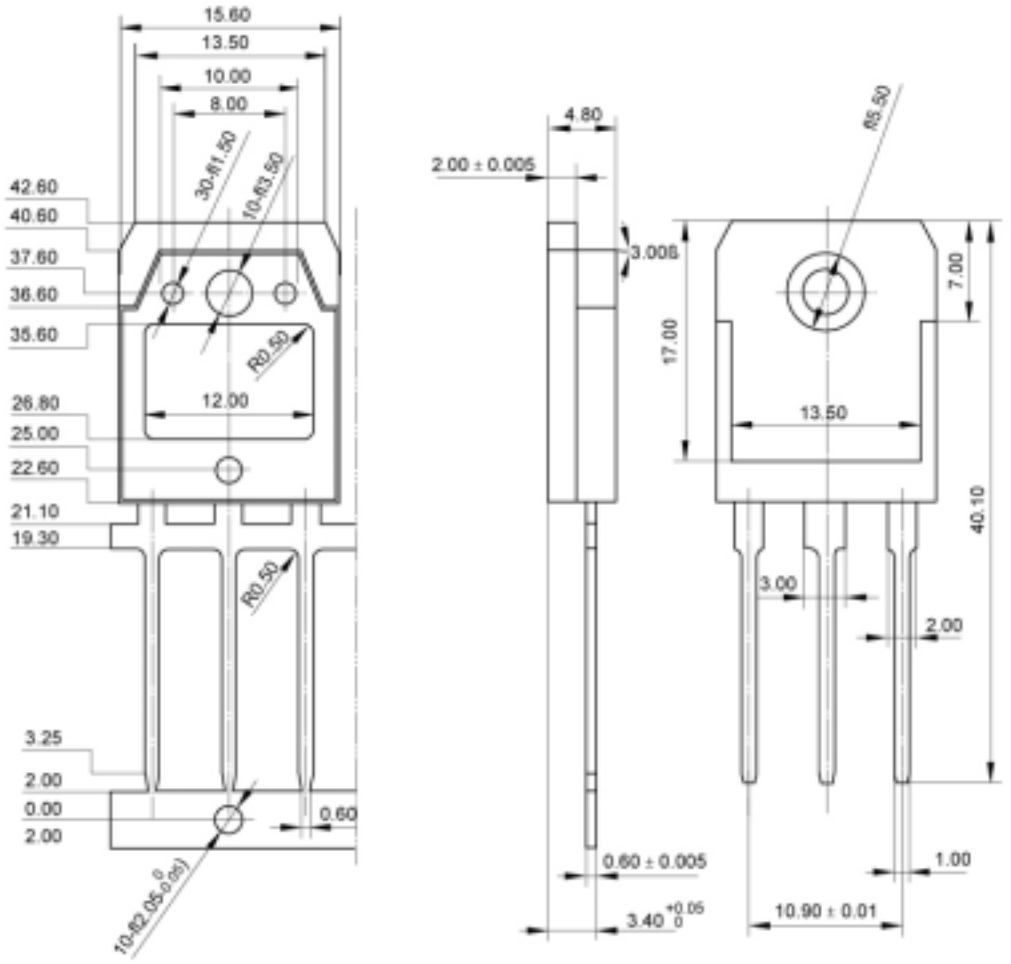

Fig.2 outline dimensions (unindicated tolerance:±0.10 mm)