查询CXA10-48S05供应商 捷多邦，专业PCB打样工厂，24小时加急出货

Embedded Power for
Business-Critical Continuity

CXA10
Single output

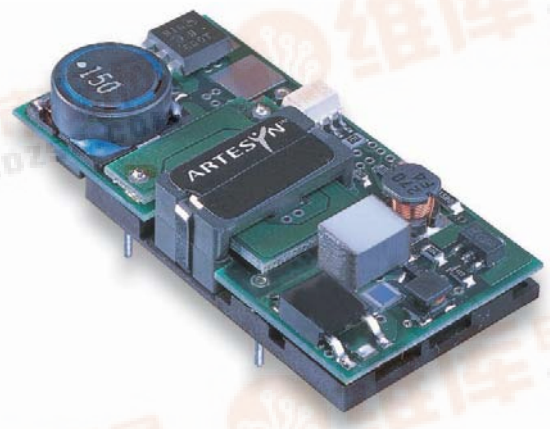

Total Power: 10W
Input Voltage: 18 - 75VDC
# of Outputs: Single

Special Features

- 4:1 input voltage range
- Operating ambient temperature of -40°C to +70°C in still air
- High demonstrated reliability with conservative component deratings
- Complies with ETS 300 019-1-3/2-3
- Complies with ETS 300 132-2 input voltage and current requirements
- Fully compliant with ETS 300 386-1
- Pin compatible with NFC10 and BXA10 series
- Basic insulation system (input to output)
- 2 year warranty

The CXA10 series comprising of five different models delivers single and dual output voltages covering 3.3 V, 5 V, 12 V, ±5 V, ±12 V and ±15 V. The series has a wide 4:1 input voltage range of 18Vdc to 75 Vdc. The CXA10 has been designed as a competitive open-frame alternative for the communications market. The product is supplied in the industry standard footprint of 2.0 x 1.0 x 0.394 inches. Other product features include overvoltage protection, short-circuit protection and remote ON/OFF.
All components are placed in a fully automated environment. Planar magnetics are used in the design to improve the reliability and reduce the profile of the dc-dc converter. The series has full international safety approvals reducing system compliance costs, and it has a basic insulation system from input to output making it suitable for a wide variety of applications.

Safety

UL/cUL CAN/CSA 22.2
No. 60950-00 : UL 60950-1
File No. E132002
VDE Certificate No.112607.
File No. 40040100-3336-0136
CB Report and Certificate to
IEC60950-1, #DE 1-30686

找PDF 维库 pdf.dzsc.com

ARTESYN®

EMERSON™
Network Power

Specifications

All specifications are typical at nominal input, full load at 25°C unless otherwise stated.

OUTPUT SPECIFICATIONS

Voltage accuracy		±1.0%
Line regulation (LL to HL)	Singles/dual positives Dual negatives	±0.1% ±0.2%
Load regulation (not incl. cross reg.)	Full load to minimum load	±0.15%
Min. load	All outputs	10%
Ripple and noise 20 MHz bandwidth	3.3 V and 5.0 V All others All models	30 mV pk-pk 60 mV pk-pk 12 mV rms
Temperature coefficient		±0.01%/°C
Overvoltage protection	Clamp type	(See table and Notes 3, 4)
Short circuit protection Short <20 mΩ	Hiccup	Continuous auto. recovery
Transient response	Min. load to FL	±1.0%
Load cross regulation	Min. load to FL (See Note 1)	±5.0%

INPUT SPECIFICATIONS

Input voltage range	48 Vin nominal	18-75 Vdc
Input fuse	(See Note 10)	1.5 A HRC
Max. input rise and fall time	48 V ETS300 132-2	5 V/ms
UVLO turn ON voltage UVLO turn OFF voltage	(See Note 5) (See Note 5)	94% 86%
Remote ON/OFF Logic compatibility ON OFF		(See Note 7) CMOS/TTL/Open Collector Open circuit <1 Vdc

EMC CHARACTERISTICS

ETS 300 386-1 table 5 Conducted emissions	EN55022 (See Note 6) EN55022, external filter, VDE0878, 48 V models	Level A Level B
Radiated emissions	See Application Note 100	
ESD air	EN61000-4-2, level 3	
ESD contact	EN61000-4-2, level 4	
Surge (500 V)	EN61000-4-5, level 3, 4	
Fast transients	EN61000-4-4, level 3, 4	
Radiated immunity	EN61000-4-3, level 3	
Conducted immunity	EN61000-4-6, level 3	

GENERAL SPECIFICATIONS

Efficiency		See table
Isolation voltage	Input/output test voltage	1500 Vdc
Switching frequency	Fixed	400 kHz
Approvals and standards (See Notes 7,8,9,10,11)		EN60950, UL1950 CSA C22.2 No. 950
Material flammability		UL94V-0
Weight		12 g (0.42 oz)
MTBF (Representative model 48S05J @ 48 Vin)	MIL-HDBK-217F Parts stress method Ground Benign @ 25 °C	456,621 hours

ENVIRONMENTAL SPECIFICATIONS

Thermal performance	Operating ambient temperature Non-operating	-40 °C to +70 °C, See curves -55 °C to +105 °C
ETS 300 019-2-3		Classes T3.1 to T3.5
Air temperature	Low: IEC 68-2-1 High: IEC 68-2-2 Change: IEC 68-2-14	-40 °C +70 °C -40°C to +70 °C
Relative humidity	IEC 68-2-56 IEC 68-2-30	10% to 100% RH Condensation
Vibration, Class 3M5 9-200 Hz 1 g	IEC68-2-6 MIL-STD-202F	2-9 Hz, 3 mm disp. Method 204 cond. A
Shock, Class 3M5	IEC-68-2-29 MIL-STD-202F	Method 213B cond. A

Specifications Contd.

INPUT VOLTAGE	OUTPUT VOLTAGE	OVERVOLTAGE PROTECTION (3,4)	OUTPUT CURRENT (MAX.) (9)	TYPICAL EFFICIENCY	MODEL NUMBER (7,12,13)
18-75 Vdc	3.3 V	3.9 V	2.4 A	78%	CXA10-48S3V3J
18-75 Vdc	5 V	6.8 V	2 A	81%	CXA10-48S05J
18-75 Vdc	12 V	16 V	0.83 A	83%	CXA10-48S12J
18-75 Vdc	±5 V	±6.8 V	1 A	81%	CXA10-48D05J
18-75 Vdc	±12 V	±16 V	0.41 A	83%	CXA10-48D12J
18-75 Vdc	±15 V	±19 V	0.33 A	81%	CXA10-48D15J

Notes

1 Negative output voltage deviation when positive load is changed.
2 Guaranteed minimum output voltage range.
3 TVS spec: See Application Note 100 on our web site.
4 On dual output models, OVP protection is on negative outputs only.
5 With respect to minimum input voltage.
6 With one external ITW Paktron 4.7 µF film capacitor across the input.
7 For units with optional remote ON/OFF, please add the suffix '-S' to the model number, e.g. CXA10-48S05-SJ. Additional alphanumeric suffixes maybe added to indicate minor modifications not affecting the safety approvals.
8 Unit provides basic insulation up to the 75 Vdc maximum input voltage.
9 Maximum continuous output power not to exceed 10 Watts. 7.9 Watts for the 3V3 model.
10 User must provide 1.5 A in line fuse in order to comply with safety approvals.
11 Maximum temperature on components Q100, CR101, CR102 not to exceed 120 °C. See Application Note 100 for details.
12 The 'J' suffix indicates that these parts are Pb-free (RoHS 6/6) compliant. TSE RoHS 5/6 (non Pb-free) compliant versions may be available on special request, please contact your local sales representative for details.
13 NOTICE: Some models do not support all options. Please contact your local Artesyn representative or use the on-line model number search tool at http://www.artesyn.com/powergroup/products.htm to find a suitable alternative.

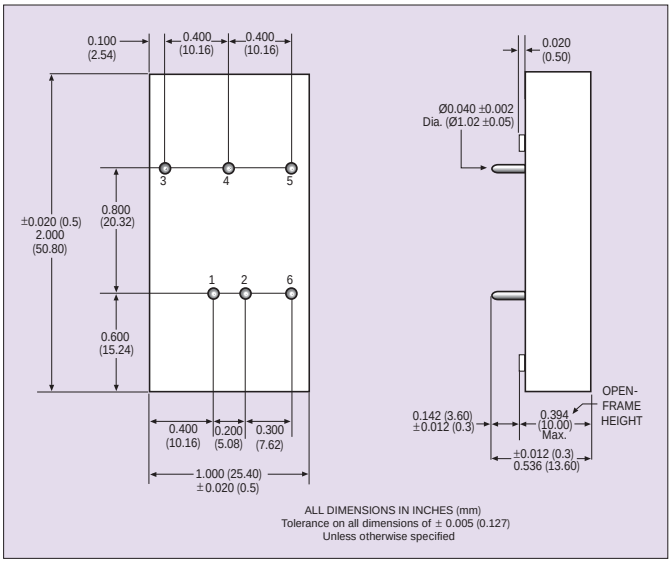

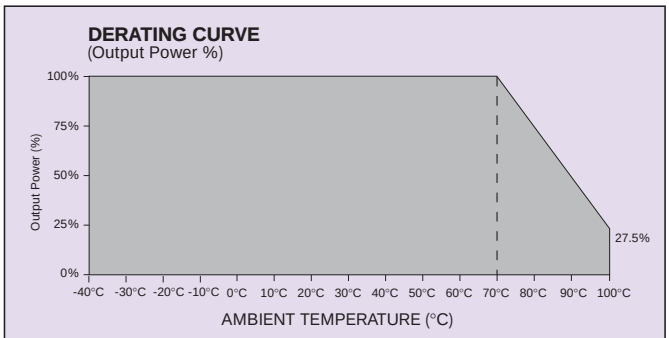

Figure 1: Natural Convection (0.1m/s) Typical derating - See Application Note 100

PIN CONNECTIONS		
PIN NUMBER	SINGLE OUTPUT	DUAL OUTPUT
1	+ Input	+ Input
2	– Input	- Input
6 *	Remote ON/OFF	Remote ON/OFF
3	+ Output	+ Output
4	No Pin	Common
5	- Output	- Output

* Optional remote ON/OFF pin. Please add the suffix '-S' to the model number, e.g. CXA10-48S05-SJ (See Note 7).

CAUTION: Hazardous internal voltages and high temperatures.
Ensure that unit is not user accessible.

Embedded Power for
Business-Critical Continuity

Americas
5810 Van Allen Way
Carlsbad, CA 92008
USA
Telephone: +1 760 930 4600
Facsimile: +1 760 930 0698

Europe (UK)
Waterfront Business Park
Merry Hill, Dudley
West Midlands, DY5 1LX
United Kingdom
Telephone: +44 (0) 1384 842 211
Facsimile: +44 (0) 1384 843 355

Asia (HK)
16th - 17th Floors, Lu Plaza
2 Wing Yip Street, Kwun Tong
Kowloon, Hong Kong
Telephone: +852 2176 3333
Facsimile: +852 2176 3888

For global contact, visit:
www.powerconversion.com
technicalsupport@powerconversion.com

While every precaution has been taken to ensure accuracy and completeness in this literature, Emerson Network Power assumes no responsibility, and disclaims all liability for damages resulting from use of this information or for any errors or omissions.

Emerson Network Power.
The global leader in enabling business-critical continuity.

- AC Power
- Connectivity
- DC Power
- **Embedded Power**
- Inbound Power
- Integrated Cabinet Solutions
- Outside Plant
- Precision Cooling
- Site Monitoring and Services

EmersonNetworkPower. com

Emerson Network Power and the Emerson Network Power logo are trademarks and service marks of Emerson Electric Co.
©2007 Emerson Electric Co