查询2SC2307供应商 捷多邦，专业PCB打样工厂，24小时加急出货

Silicon NPN Power Transistors 2SC2307

DESCRIPTION

- With TO-3PN package
- High voltage ,high speed

APPLICATIONS

- For power switching applications

PINNING

PIN	DESCRIPTION
1	Base
2	Collector;connected to mounting base
3	Emitter

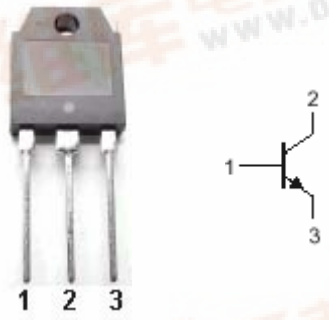

Fig.1 simplified outline (TO-3PN) and symbol

Absolute maximum ratings(Ta=25℃)

SYMBOL	PARAMETER	CONDITIONS	MAX	UNIT
V_{CBO}	Collector-base voltage	Open emitter	500	V
V_{CEO}	Collector-emitter voltage	Open base	400	V
V_{EBO}	Emitter-base voltage	Open collector	7	V
I_C	Collector current (DC)		12	A
P_C	Collector power dissipation	T_C=25℃	100	W
T_j	Junction temperature		150	℃
T_{stg}	Storage temperature		-55~150	℃

固电半导体 INCHANGE SEMICONDUCTOR

找PDF 维库一下 pdf.dzsc.com

Silicon NPN Power Transistors 2SC2307

CHARACTERISTICS

Tj=25℃ unless otherwise specified

SYMBOL	PARAMETER	CONDITIONS	MIN	TYP.	MAX	UNIT
$V_{(BR)CEO}$	Collector-emitter breakdown voltage	I_C=25mA ;I_B=0	400			V
$V_{(BR)CBO}$	Collector-base breakdown voltage	I_C=1mA ;I_E=0	500			V
$V_{(BR)EBO}$	Emitter-base breakdown voltage	I_E=1mA ;I_C=0	7			V
V_{CEsat}	Collector-emitter saturation voltage	I_C=7A; I_B=1.4A			0.5	V
V_{BEsat}	Base-emitter saturation voltage	I_C=7A; I_B=1.4A			1.3	V
I_{CBO}	Collector cut-off current	V_{CB}=500V; I_E=0			100	μA
I_{EBO}	Emitter cut-off current	V_{EB}=7V; I_C=0			100	μA
h_{FE}	DC current gain	I_C=7A ; V_{CE}=4V	10			
f_T	Transition frequency	I_C=1A ; V_{CE}=12V		18		MHz

固电半导体 INCHANGE SEMICONDUCTOR

PACKAGE OUTLINE

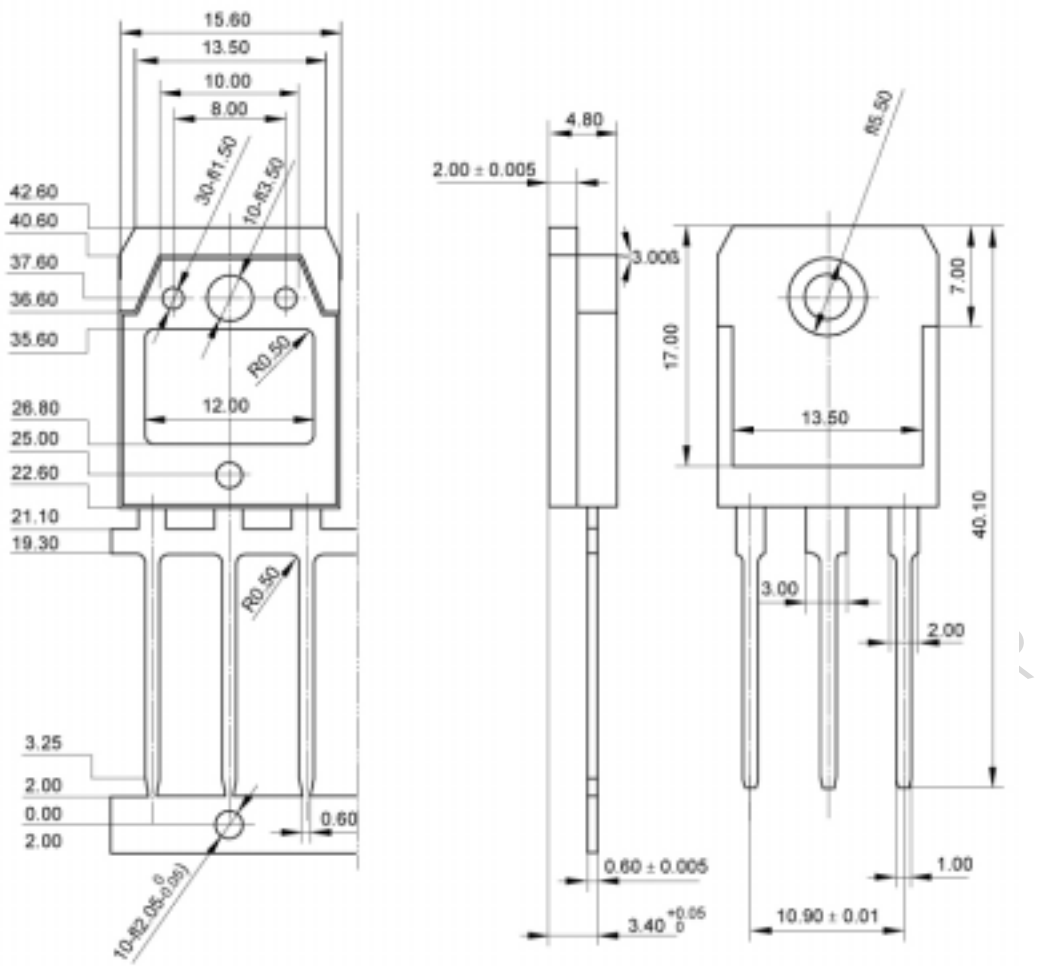

Fig.2 outline dimensions (unindicated tolerance:±0.1mm)