Silicon NPN Power Transistors 2SC1929

DESCRIPTION

- With TO-220C package
- High V_{CEO}
- Large P_C

APPLICATIONS

- AF output for direct main operation TV

PINNING

PIN	DESCRIPTION
1	Base
2	Collector;connected to mounting base
3	Emitter

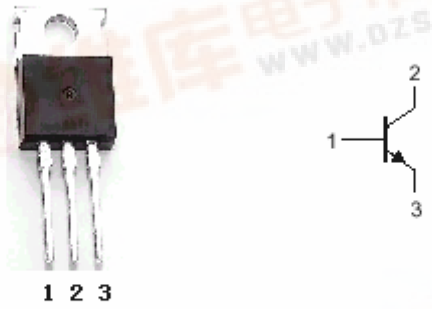

Fig.1 simplified outline (TO-220C) and symbol

Absolute maximum ratings (Tc=25℃)

SYMBOL	PARAMETER	CONDITIONS	VALUE	UNIT
V_{CBO}	Collector-base voltage	Open emitter	300	V
V_{CEO}	Collector-emitter voltage	Open base	300	V
V_{EBO}	Emitter-base voltage	Open collector	6	V
I_C	Collector current		0.4	A
I_{CM}	Collector current-Peak		1	A
P_C	Total power dissipation	T_C=25℃	25	W
T_j	Junction temperature		150	℃
T_{stg}	Storage temperature		-55~150	℃

Silicon NPN Power Transistors 2SC1929

CHARACTERISTICS

Tj=25℃ unless otherwise specified

SYMBOL	PARAMETER	CONDITIONS	MIN	TYP.	MAX	UNIT
$V_{(BR)CEO}$	Collector-emitter breakdown voltage	I_C=10mA ;I_B=0	300			V
$V_{(BR)EBO}$	Emitter-base breakdown voltage	I_E=5mA ;I_C=0	6			V
V_{CEsat}	Collector-emitter saturation voltage	I_C=500mA; I_B=50mA			2.0	V
V_{BEsat}	Base-emitter on voltage	I_C=0.1A ; V_{CE}=5V			1.5	V
I_{CBO}	Collector cut-off current	V_{CB}=300V; I_E=0			10	μ A
h_{FE-1}	DC current gain	I_C=0.1A ; V_{CE}=5V	35		330	
h_{FE-2}	DC current gain	I_C=0.3A ; V_{CE}=5V	30			
f_T	Transition frequency	I_C=0.1A ; V_{CE}=5V		80		MHz

◆ **h_{FE-1} Classifications**

S	R	Q	P
35-70	60-120	100-200	165-330

PACKAGE OUTLINE

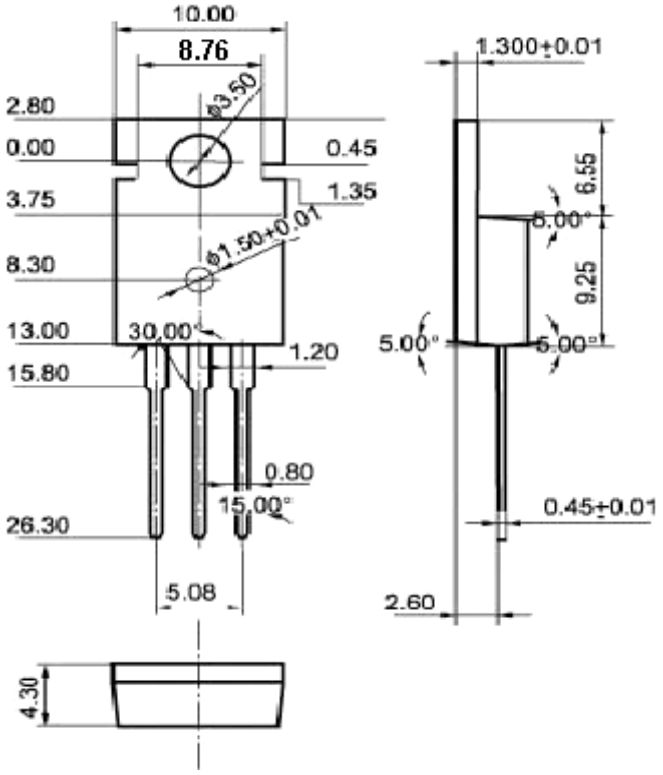

Fig.2 Outline dimensions (unindicated tolerance:±0.10mm)