查询2SD1158供应商 捷多邦，专业PCB打样工厂，24小时加急出货

Silicon NPN Power Transistors 2SD1158

DESCRIPTION

- With TO-220 package
- High speed switching
- High DC current gain
- Low collector saturation voltage

APPLICATIONS

- Switching regulators
- DC-DC converters
- Solid state relay
- General purpose power amplifiers

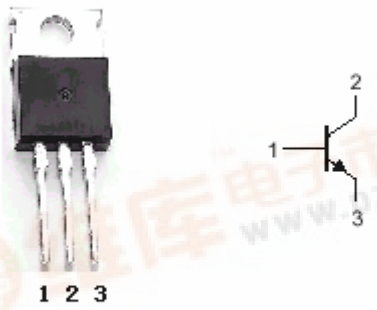

Fig.1 simplified outline (TO-220C) and symbol

PINNING

PIN	DESCRIPTION
1	Base
2	Collector;connected to mounting base
3	Emitter

Absolute maximum ratings (Ta=25℃)

SYMBOL	PARAMETER	CONDITIONS	VALUE	UNIT
V_{CBO}	Collector-base voltage	Open emitter	80	V
V_{CEO}	Collector-emitter voltage	Open base	50	V
V_{EBO}	Emitter-base voltage	Open collector	10	V
I_C	Collector current		8	A
I_B	Base current		2	A
P_C	Collector power dissipation	T_C=25℃	40	W
T_j	Junction temperature		150	℃
T_{stg}	Storage temperature		-55~150	℃

THERMAL CHARACTERISTICS

SYMBOL	PARAMETER	VALUE	UNIT
$R_{th\ j\text{-}c}$	Thermal resistance junction to case	1.25	℃/W

找PDF 维库一下 pdf.dzsc.com

CHARACTERISTICS

Tj=25℃ unless otherwise specified

SYMBOL	PARAMETER	CONDITIONS	MIN	TYP.	MAX	UNIT
$V_{(BR)CEO}$	Collector-emitter breakdown voltage	I_C=10mA ;I_B=0	50			V
$V_{(BR)CBO}$	Collector-base breakdown voltage	I_C=0.1mA ;I_E=0	80			V
$V_{(BR)EBO}$	Emitter-base breakdown voltage	I_E=0.1mA ;I_C=0	10			V
V_{CEsat}	Collector-emitter saturation voltage	I_C=2A, I_B=0.1A			0.5	V
V_{BEsat}	Base-emitter saturation voltage	I_C=2A, I_B=0.1A			1.5	V
I_{CBO}	Collector cut-off current	V_{CB}=80V;I_E=0			0.1	mA
I_{EBO}	Emitter cut-off current	V_{EB}=10V; I_C=0			0.1	mA
h_{FE}	DC current gain	I_C=1A ; V_{CE}=5V	250			

Switching times

t_{on}	Turn-on time	I_C=5A;I_{B1}=-I_{B2}=0.5A R_L=6Ω Pw = 20μs, Duty≤2%			0.5	μs
t_s	Storage time				3.0	μs
t_f	Fall time				0.8	μs

PACKAGE OUTLINE

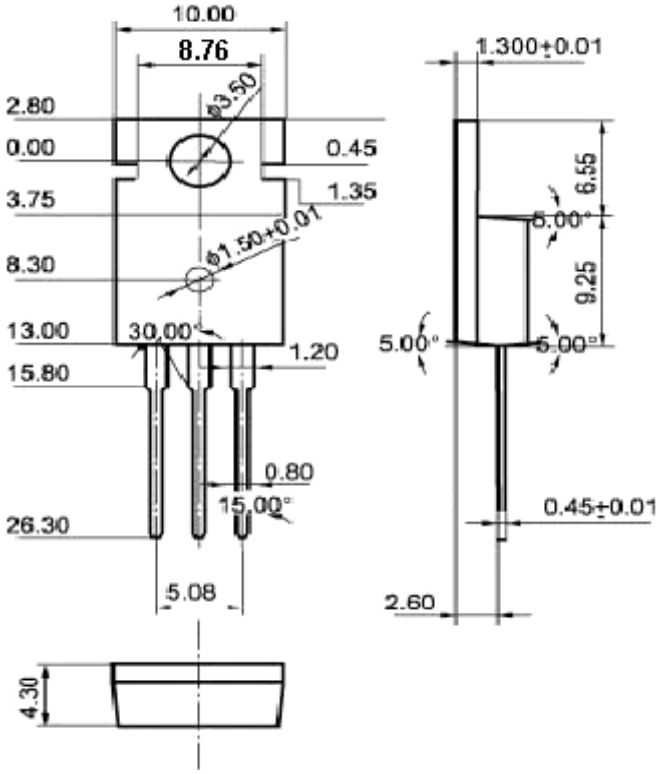

Fig.2 outline dimensions (unindicated tolerance:±0.10 mm)

Silicon NPN Power Transistors 2SD1158

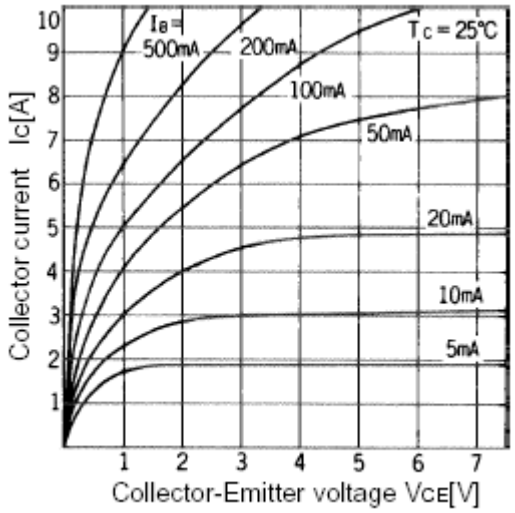

Fig.3 Static Characteristic

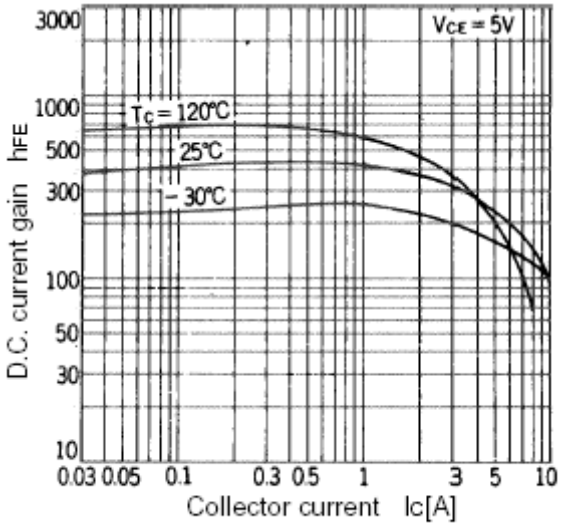

Fig.4 DC current Gain

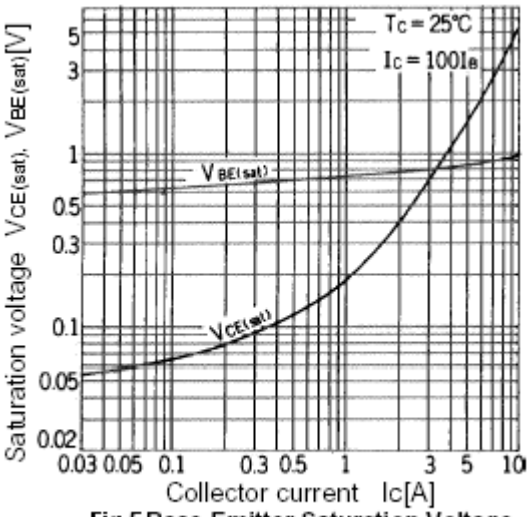

Fig.5 Base-Emitter Saturation Voltage
Collector-Emitter Saturation Voltage

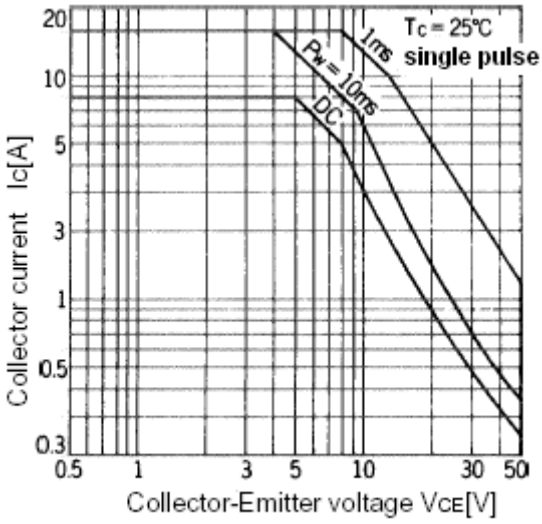

Fig.6 Safe Operating Area